ENGINEERING DATA BOOK

FPS VERSION

Volumes I & II

Sections 1-26

Published as a service to the gas processing
and related process industries

by the

Gas Processors Suppliers Association

6526 East 60th Street

Tulsa, Oklahoma 74145

Phone: (918) 493-3872

Fax: (918) 493-3875

e-mail: gpsa@gasprocessors.com

www.gasprocessors.com

Compiled and edited
in co-operation with the

Gas Processors Association

Twelfth Edition — FPS

2004

Preface to the Twelfth Edition

The Gas Processors Suppliers Association is an organization of companies with specialized knowledge of the supply and service needs of the gas processing and related industries. A major service to them is embodied in the Engineering Data Book, which was first published in 1935. Over 150,000 copies of the Ninth, Tenth, and Eleventh Editions of the book were distributed for use throughout the world by engineers, operating personnel, and students.

The Twelfth Edition of the Engineering Data Book, available in two versions — FPS and SI — is an attempt to assemble, in a single compilation, basic design information together with data and procedures that can be used by field and plant engineers to determine operating and design parameters. It is also intended as an aid to design engineers who, in spite of increasing availability of computer routines and other sophisticated design methods, require a general reference work as a guide to accepted engineering practice for estimating, feasibility studies, preliminary design, and for making on-site operating decisions.

The loose-leaf format of the Data Book permits periodic updating to meet the changing technology of the process industries.

GPSA recognizes that the maintenance of the Data Book is a continuing task. Users' comments and suggestions are welcome. Any such comments should be made in writing to:

Gas Processors Suppliers Association
6526 E. 60th St.
Tulsa, Oklahoma 74145
Fax: (918) 493-3875
e-mail: gpsa@gasprocessors.com

A Brief History of the Engineering Data Book and Sponsoring Organizations

The GPSA Engineering Data Book was first published in 1935 as a booklet containing much advertising and a little technical information. In subsequent editions, technical information was expanded and the Data Book gradually became the accepted engineering reference work for the gas processing industry. In addition, the Data Book has found wide acceptance in the petroleum refining, gas transmission, and petrochemical industries.

The Gas Processors Suppliers Association (GPSA) was organized in 1928 as the Natural Gasoline Supply Men's Association (NGSMA). Its principal purpose was as a service organization to the parent Natural Gasoline Association of America (NGAA).

Both organizations underwent name changes in subsequent years in response to changing industry conditions. In 1961, the organizations became known as the Natural Gas Processors Association (NGPA) and the Natural Gas Processors Suppliers Association (NGPSA). In 1974 the names changed to the current Gas Processors Association (GPA) and Gas Processors Suppliers Association (GPSA).

Users of the manual should note that numerous references throughout the book may refer to publications of these organizations by the names in effect at the time of the publication.

Copyright and Disclaimer

This Engineering Data Book ("Publication") is published by Gas Processors Suppliers Association ("GPSA") as a service to the gas processing industry. All information within this Publication has been compiled and edited in cooperation with the Gas Processors Association ("GPA"). Unless otherwise specifically noted herein, all rights are reserved by GPSA, and the contents of all material in this Publication are copyrighted by GPSA.

Copyright is not claimed as to any part of an original work prepared by (i) a U.S. or state government officer or employee as part of that person's official duties or (ii) by contributors whose permission to GPSA to use such data is specifically noted herein. Unless specifically authorized within the text of this Publication, content may not be reproduced, disseminated, published, or transferred in any form or by any means, except with the prior written permission of GPSA, or as indicated below. Copyright infringement is a violation of federal law subject to criminal and civil penalties.

While GPA and GPSA have made every effort to present accurate and reliable technical information in this Publication, the use of such information is voluntary and GPA and GPSA do not guarantee the accuracy, completeness, efficacy or timeliness of such information. Reference herein to any specific commercial product, process, or service by tradename, trademark, service mark, manufacturer, or otherwise does not constitute or imply endorsement, recommendation, or favoring by GPA and GPSA.

The information provided in this Publication is provided without any warranties of any kind including warranties of accuracy or reasonableness of factual or scientific assumptions, studies or conclusions, or merchantability, fitness for a particular purpose or non-infringement of intellectual property.

In no event will GPA or GPSA and their members be liable for any damages whatsoever (including, without limitation, those resulting from lost profits, lost data or business interruption) arising out of the use, inability to use, reference to or reliance on the information in this Publication, whether based on warranty, contract, tort or any other legal theory and whether or not advised of the possibility of such damages.

Acknowledgments

Twelfth Edition

GPSA wishes to acknowledge the work of those individuals who contributed their talents and literally thousands of hours of time to the writing, editing, reviewing, and assembling of the information in this Twelfth Edition of the Engineering Data Book. Many, though not all, of those individuals are listed in the roster of contributors. GPSA is also indebted to processing and service companies that made available expert personnel, and for release of technical information for this edition, some of which has not been published previously.

GPSA also acknowledges the outstanding work and dedication of the Editorial Review Board, which was totally responsible for final editing, review, and assembly of editorial material for the Twelfth Edition. Review Board members at the date of publication:

Brian Price, Chairman, Black & Veatch Pritchard
Fred G. Russell, Hudson Products Corporation
D.J. Morgan, John M. Campbell & Company
J.M. Kramer, KBR
Ari Minkkinen, Institut Francais du Petrole
Bob Heigold, Jacobs Canada
Gustavo A. Soto Soto, PDVSA
Helge Rivelsrud, Norsk Hydro a.s.
Mark Bothamley, John M. Campbell & Co.
Ken Hall, Texas A&M University
Scott Northrop, ExxonMobil

GPSA also wishes to acknowledge all the work of Ed Raper, ELR; Susan Coman and Pat Dock, ProType, Inc.; and Mike Jackson, Jackson Design; for their work in publishing this book.

Editorial Contributors — Tenth, Eleventh, and Twelfth Editions

Fred G. Russell, Hudson Products Corp.
Stanley Adler, M.W. Kellogg Co.
L.R. Albaugh, Arco Oil & Gas Co.
Gilbert J. Aldana, Intevep, S.A.
Jack Allen, Vinson Supply Co.
Abdulreda Alysaygh, University of Qatar
Francois Allemand, TotalFina Elf
R.B. Anderson, Exxon Production & Research Co.
Tim Anderson and staff, Antec
Bob Armbruster, Williams Energy
J.C. Arnoldi, Stearns-Roger Corp.
Michael Ayers, Hudson Engineering Corp.
Tom Bacon, Dow Chemical
D. L. Bakas, Stearns-Roger Corp.
Tommy Ball, Ford, Bacon & Davis, Inc.
Hugh Bankes, Bankes Engineering
Jean-Claude Barbier, IFP
D.D. Battershell, D.D. Battershell & Associates
Ned Baudat, B & C Associates
R.E. Beaty, Premier Measurement Co.
J.L. Berg, Hudson Products Corporation
Tim Berry, Williams Energy
David F. Bergman, Amoco
W.A. Bobbs, Fluor Daniel, Inc.
K.A. Bodine, Stearns-Roger Corp.
Mark Bothamley, John M. Campbell & Co.
William C. Boyer, Oxy Cities Service NGL, Inc.
George Briley, Refrigeration Engineering Co.
Ron Brunner, GPA
Carroll Buster, Ford, Bacon & Davis, Inc.
Paul Buthod, University of Tulsa
Bill Caffey, Koch Hydrocarbon Co.
John M. Campbell, John M. Campbell Co.
P.R. Campbell, Hudson Engineering Corp.
Stan Canfield, Williams Energy
R.E. Cannon, GPA, GPSA
O.T. Carlisle, Matthew Hall Engineering
Peter Carnell, ICI Katalco
Steve Chalmers, Cooling Products
Patsy Chappelear, Hudson Engineering Corp.
C.C. Chen, Hudson Engineering Corp.
Roger J.J. Chen, Davy McKee International
Tom Cheney, Anadarko
Jan K. Ciupak, Amoco Production Co.
H.A. Clayton, Phillips Petroleum Co.
Doug Clower, McDermott Marine Engineering
Donald J. Cody, Stearns-Roger Corp.
Susan Coman and staff, ProType, Inc.
Tom Cooley, Kvaerner Membrane Systems
Virgil Cory, Williams Energy
David Courtney, Conoco
Richard Cruz, Ben Holt Co.
W.L. Davis, Hudson Products Corporation
Harry Deakin, M W Kellogg Co.
Jack Dingman, Texaco Chemical Co.
Walter Driedger, Colt Engineering Corp.
M.S. DuPart, Dow Chemical
Lance Eckel, Oxy Cities Service NGL, Inc.
Peter W. Elder, Delta Projects Ltd.
D.G. Elliot, Davy McKee International
James F. Ely, Colorado School of Mines
S.K. Fan, Mycom, Inc.
Gerald L. Farrar, G.L. Farrar & Associates
James A. Feldman, Applied Automation, Inc.
Stuart Ferguson, Shell International Gas Ltd.
Tom Ferguson, The Randall Corporation
Vernon O. Fey, Stearns-Roger Corp.
R.H.E. Fierens, Raytheon Engineers
Wayne A. Fling, Oxy Cities Service–Retired
A.J. Flynn, Shell Oil Co.
Francis Foret, Warren Petroleum
Ken Frankenberger, King Tool Company
G.D. Gaylon, Stearns-Roger Corp.
J.C. Geiger, Champlin Petroleum Co.
B.A. George, Amoco Production Co.
C.L. Gerlovich, Stearns-Roger Corp.
P. Gilcrease, Stearns-Roger Corp./Colorado School of Mines
Jack Gillaspy, Philadelphia Gear Co.
Bruce Gilmer, InterNorth, Inc.
Sudhir Golikeri, Davy McKee International
J.C. Green, Williams Pipeline
R.D. Gresham, Stearns-Roger Corp.
Kenneth R. Hall, Texas A&M University
Bob Hamilton, Consultant
R.L. Hamilton, Stearns-Roger Corp.
Charles Hammack, Engineers & Fabricators, Inc.
Glen E. Handwerk, Consultant
Steve Harless, Duke Energy
E.F. Harris, Tennessee Gas Pipeline Co.
S.T. Hartzog, Hudson Engineering Corp.
Bob Heigold, Jacobs Canada
W.D. Henderson, Shell Oil Co.

Harvey L. Hensley, Davy McKee-Dresser Engineering Div.
Janet D. Herbert, Oxy Cities Service NGL, Inc.
J.P. Herrin, J.P. Herrin & Associates
John Hersley, Marley Equipment Co.
R.D. Higgins, Stearns-Roger Corp.
T.L. Hillburn, Turnbow Engineering
Robert J. Hlozek, Union Carbide
David Holbrook, UOP
Howard Holder, El Paso Natural Gas Co.
Patrick Holub, Huntsman Corporation
Bill Homuth, Westinghouse
Robert Hubbard, John M. Campbell & Co.
Jack T. Hull, Fluor Engineers & Constructors
Mike Jackson, Jackson Design
Frank Jarrett, John M. Campbell & Co.
Arland H. Johannes, Oklahoma State University
Johnny Johnson, The Pritchard Corp.
J.V. Johnson, Jr., Mobil Oil Corp.
Ken Joslin, Mobil R&D Co.
Kathrin Juch, Grace GmbH
Bill Judd, Dow Chemical Canada, Inc.
J.E. Junkin, Stearns-Roger Corp.
Dan Kemp, Oxy Cities Service NGL, Inc.
Wendell Kensell, Aker Omega, Inc.
K. Kilgannon, Stearns-Roger Corp.
Dean L. King, ExxonMobil
Bernard Kouzel, Union Oil Company of California
J.M. Kramer, Halliburton KBR
Kevin Kramer, College of William & Mary
Francis Lallemand, TotalFina Elf
Joseph Larue, IFP
Willard A. Lewis, Amoco Production Co.
R.M. Ligon, Brown & Root, Inc.
Ted Levin, Hudson Engineering Corp.
Havard Lidal, Statoil
Larry Lilly, John M. Campbell & Co.
Louis Lloyd, Lufkin Industries
Mark Loring, M W Kellogg Co.
Royce Loshbaugh, Mobil R&D Corp.
R.N. Maddox, Oklahoma State University
G.A. Madore, Stearns-Roger Corp.
Charles Maitland, Perry Gas Processors
William P. Manning, C-E Natco
Bill Manning, Coastal Chemical
Frank Manning, Tulsa University
Tony Marburger, Chevron Texaco
Randy Marek, Hudson Engineering Corp.
Herbert D. Marsh, Crest Engineering, Inc.
John E. Martin, Canterra Energy Ltd.
Sharon Mason, ProType, Inc.
P.M. McCann, Koch Hydrocarbon Co.
Dan G. McCartney, Black & Veatch Pritchard, Inc.
Russell L. McGalliard, Amoco–Retired
J.T. McKinney, Process Equipment Co.
Al Medencorp. Trend Construction Co.
Wiley B. Megee, Phillips Petroleum Co.
Yuv Mehra, Advanced Extraction Technologies, Inc.
H.M. Merritt, Glitsch, Inc.
Bill Millard, General Electric Co.
Ari Minkkinen, Institut Francais du Petrole
Haakon Moestue, Norsk Hydro
D.J. Morgan, John M. Campbell & Co.
Gary Mori, Warren Petroleum
Don Morris, Davy McKee-Dresser Engineering Div.
Mahmood Moshfeghian, Shiraz University
H.W. Mulkins, Stearns-Roger Corp.
M.J. Mulvany, Pioneer Gas Products Co.
Marv Natham, Crawford & Russell, Inc.
Gerry W. Nell, UOP Canada, Inc.
H. Lee Norris III, Exxon Production & Research Co.
O.E. Norris, CBI-NaCon, Inc.
Jimmy Ong, ChevronTexaco
Scott Northrop, ExxonMobil
John Palsgrove, Bentley-Nevada
Donald Papa, Anderson Greenwood
Dav Parnell, Coastal Chemical Co.
Susu Patel, Petro Canada Resources
Charles C. Patton, C.C. Patton & Associates
Jerry R. Peebles, Oxy Cities Service NGL, Inc.
Glen Petty, Crawford Enterprises
Rob Phillips, Optimized Process Furnaces, Inc.
William Phillips, M W Kellogg Co.
Bob Piehl, Chevron
J.G. Pierpoint, Stearns-Roger Corp.
F.J. Pocock, Babcock & Wilcox
Verleon H. Porter, Key Engineering, Inc.
W.A. Potts, Exxon Production & Research Co.
Michael Prevade, Calgon Corporation
Brian Price, Black & Veatch Pritchard
J. Printz, Stearns-Roger Corp.
Bui Quynhthy, Conoco
Ed Raper, ELR
Laurance Reid, Laurance Reid Associates, Inc.
Bret Rhinesmith, Pearl Development Co.
J.M. Richards, Stearns-Roger Corp.
Peter Richardson, Davy McKee-Dresser Engineering Div.
C.J. Riley, Stearns-Roger Corp.
Helge Rivelsrud, Norsk Hydro a.s.
W.E. Robert, Fish Engineering & Construction, Inc.
Bill Robinson, Robinson-Utter & Associates
Sharon Robinson, Oxy Cities Service NGL, Inc.
Gary T. Rochelle, University of Texas
Gene Rochette, Optimized Process Furnaces
Rolf Roenning, Norsk Hydro
Alexandre Rojey, IFP
Bill Roof, C-E Natco
C.E. Rose, Warren Petroleum Co.
Frank Rusche, KBR
Tom Russell, T.H. Russell Co.
Dana Salamone, Contritech Corp.
S.R. Salzesen, Ingersoll-Rand Co.
D.J. Sampat, Stearns-Roger Corp.
James Schauls, Trane Co.
Ted H. Scheer, Arco Oil & Gas Co.
Paul Schmidt, Fish Engineering & Construction, Inc.
Robert Schwartz, John Zink Co.
Fred Selleck, Fluor Engineers & Constructors
Dale Sharpe, Bingham-Willamette Ltd.
R.M. Sherman, Peerless Manufacturing Co.
J.H. Shieh, Glitsch, Inc.
Alan Silverman, Mobil R&D Co.
C.R. Sivalls, Sivalls, Inc.
Bill Small, Phillips Petroleum Co.
Dexter Smith, Applied Automation, Inc.
Robert Smith, OPC Engineering
Robert C. Smith, Quantum Technology
Gustavo A. Soto Soto, PDVSA
Cal Spencer, KBR
S.T. Stark, Stark & Associates
Kenneth Starling, John M. Campbell & Co.
Danny Stowe, John M. Campbell & Co.
Ellen Strange, Norsk Hydro
James H. Stuart, Fluor Engineers & Constructors
Mike Stubenhoffer, Hanover
Carl Sutton, GPA
M.F. Sutton, GPA, GPSA
Harry Temple, Applied Automation, Inc.
R.E. Trent, Zeochem
J.C. Upchurch, Union Carbide Corp.
Gary Utter, Robinson-Utter & Associates
William R. Valego, Exxon Company, U.S.A.
Herman van Herwijnen, Shell International (SIPM)
Fred VanOrsdol, Williams Energy
Tom Varadi, Merichem Company
Robert Veroba, Huntsman Corporation
R.E. Vickrey, Vickrey Engineering Co.
Andrew Ward, International Process Systems
John Waterous, M W Kellogg Co.

Tom Welker, Welker Engineering
Jim Westmoreland, Texaco
Jeff White, John Zink Co.
Edward Wichert, Sogapro Engineering, Ltd.
Gordon C. Wichert, Penn West Petroleum, Ltd.
L. Wielgot, Stearns-Roger Corp.
Dennis Williams, Chapman Engineers, Inc.
G. Brymer Williams, University of Michigan
R.T. Williamson, Stearns-Roger Corp.
Arild Wilson, Norsk Hydro
K.W. Won, Fluor Enterprises, Inc.
William Woodard, Phillips Petroleum Co.
Colin Woodward, ICI Katalco
Rich Worsham, Worsham Enterprises
Jesse Wyrick, Fenix & Scisson, Inc.
Lyman Yarborough, Amoco Production Co.
C.D. Young, Stearns-Roger Corp./Colorado School of Mines

Table of Contents

Volume I

Volume II

Index

NOTES:

SECTION 1

General Information

This section includes a brief description of the technical activities of the Gas Processors Association (GPA) and the Gas Processors Suppliers Association (GPSA). It includes a compilation of current GPA standards, publications, and Research Reports, a glossary of terms used in the gas processing industry and several tables of common conversion factors and equivalents. At the end of the Section is a listing of other technical associations and societies that publish codes, standards and other information pertinent to the natural gas processing industry.

GPA TECHNICAL ACTIVITIES

The Gas Processors Association is an international organization with a membership of about 100 companies, each of which is engaged in one or more functions of the natural gas and gas processing industry, including: natural gas production, gathering and processing; production of natural gas liquids (NGLs); volume transport or further processing of natural gas or gas liquids; or other commerce in natural gas or gas liquids. Its principal functions include the advancement of gas processing technology through development and promulgation of international standards for NGL product specifications, test methods, measurement, and handling. In addition, GPA sponsors basic research in thermodynamic and transport properties of natural gases, gas liquids, synthetic gases, and related process stream components. The dissemination of GPA technology is accomplished through publication of industry standards, research reports, and computer programs. This technology is developed in response to industry needs by a technical committee organization with the following structure and responsibilities:

Technical Committee — The parent body responsible for assessing the technological needs of the gas processing industry, establishing priorities, assigning problems to appropriate working sections, and reviewing results and recommendations of sections as needed.

The seven working sections of the Technical Committee are:

Section A, Facilities Design and Optimization — Maintains a continuing study of all phases of gas processing design (process, mechanical, electrical, instrumentation) of broad industry interest; this responsibility does not include analytical methods nor basic data on product properties, but does include onstream process and plant control instrumentation.

Section B, Analysis — Studies and develops analytical procedures and methods to improve accuracy and reliability of test methods and data to meet the needs of the gas processing industry. All of the industry's sampling procedures, specification test methods, and analytical standards have issued from this section.

Section C, Specifications — Maintains existing product specifications, and generates new and revised specifications in response to changing industry and market needs. All U.S. and many international specifications for LP-gas and other NGL products are based on the work of this section.

Section F, Technical Data Development — Monitors the status, availability, and reliability of thermodynamic and physical property data needed for design and operation of natural gas and gas processing facilities. This section identifies industry needs for pertinent data, develops research projects to provide needed data, and supervises research to meet those needs. The section also evaluates new correlations and computer models for calculation and application of thermodynamic and physical properties applicable to natural gas processing and transport.

Primary responsibility for initiation and supervision of thermodynamic and physical properties research is vested in two steering committees comprised of highly qualified and experienced specialists.

Section H, Product Measurement and Handling — Monitors measurement data and correlations for both natural gas and natural gas liquids, and reviews handling procedures for gas liquids, including underground storage technology. The section initiates improvements in standards for accurate measurement and safe handling of both natural gas and gas liquids.

Section L, Computer Technology and Data Distribution — This Section is focused on two primary areas: 1) the continued development of the GPA Home Page on the Internet and; 2) the pursuit of data in support of the association.

Section M, Operations and Maintenance — This Section was formed to assist member companies in addressing and resolving their operations and maintenance issues, and to be a forum where such issues on gas gathering and processing can be discussed. It is anticipated that the results of this committee can supplement the programs of the GPA Regional Meetings.

Section N, LNG Committee — This is a new committee that is being established with the following goals related to the LNG industry:

1. Identify and collect relevant standards and reports
2. Recommend and steward technical and research activities
3. Develop documents: best practices, guidelines, specifications, etc.
4. Interface with associations with overlapping functions
5. Represent membership to agencies, government, etc.
6. Improve public awareness of LNG safety and security
7. Provide forums for discussing LNG issues and technologies

FIG. 1-1

Typical Components of Industry Streams

	Components											
	CO_2	H_2S	N_2	C_1	C_2	C_3	iC_4	nC_4	iC_5	nC_5	C_6	C_7+
Inert Gas	•		•									
Acid Gas	•	•										
LNG			•	•	•	•	•	•				
Natural Gas	•	•	•	•	•	•	•	•	•	•	•	•
LPG					•	•	•	•				
Natural Gasoline						•	•	•	•	•	•	•
NGL					•	•	•	•	•	•	•	•
Condensate (Stabilized)							•	•	•	•	•	•

GPSA TECHNICAL ACTIVITIES

The Gas Processors Suppliers Association is an affiliated organization of approximately 350 companies that cater to the supply and service needs of the natural gas producing and processing industry. The principal technical function of GPSA is to publish GPA and other technical information through the GPSA Engineering Data Book. In addition, technical experts from GPSA companies participate in GPA technical committee activities described above, and also provide valuable support and counsel in directing thermodynamic research and technical data development for the advancement of the industry's technology.

Editorial Review Board — The Editorial Review Board for the Engineering Data Book is the single GPSA technical committee. The Board is composed of recognized experts from both GPA and GPSA member companies, and is responsible for the continuing review and revision of the Engineering Data Book to assure that it meets the needs of the natural gas processing industry with the latest data and technology.

Definitions of Words and Terms Used in the Gas Processing Industry

absorber
A tower or column that provides contact between natural gas being processed and a liquid solvent.

absorption
The operation in which one or more components in the gas phase are transferred to (absorbed into) a liquid solvent.

absorption factor
A factor which is an indication of the tendency for a given gas phase component to be transferred to the liquid solvent. It is generally expressed as $A = L/KV$ where L and V are the molar flows of liquid and vapor, and K is the average value of the vapor-liquid equilibrium constant for the component of concern.

absorption oil
A hydrocarbon liquid used to absorb and recover components from the natural gas being processed.

acid gas
The hydrogen sulfide and/or carbon dioxide contained in, or extracted from, gas or other streams.

adiabatic expansion
The expansion of a gas, vapor, or liquid stream from a higher pressure to a lower pressure in which there is no heat transfer between the gas, vapor, or liquid and the surroundings.

adsorbent
A solid substance used to remove components from natural gas being processed.

adsorption
The process by which gaseous components are adsorbed on solids because of their molecular attraction to the solid surface.

amine (alkanolamine)
Any of several liquid compounds containing amino nitrogen generally used in water solution to remove, by reversible chemical reaction, hydrogen sulfide and/or carbon dioxide from gas and liquid hydrocarbon streams.

API Gravity
An arbitrary scale expressing the relative density of liquid petroleum products. The scale is calibrated in degrees API, calculated by the following formula:

$$\text{Deg API} = \left[\frac{141.5}{\gamma\ (60°\text{F}/60°\text{F})}\right] - 131.5$$

γ = relative density

associated gas
Gaseous hydrocarbons occuring as a free-gas phase under original oil-reservoir conditions of temperature and pressure.

atmospheric pressure
The pressure exerted on the earth by the earth's atmosphere. A pressure of 760 mm of mercury, 29.92 inches of mercury, or 14.696 psia is used as a standard for some measurements. State regulatory bodies have set other standards for use in measuring the legal volume of gas. Atmospheric pressure may also refer to the absolute ambient pressure at any given location.

barrel
A common English-unit mesure of liquid volume which, in the petroleum industry, equals 42 U.S. liquid gallons for petroleum or natural gas liquid products measured at 60°F and equilibrium vapor pressure. One barrel equals 0.159 cubic meters, or 6.29 barrels per cubic meter (See Fig. 1-2).

blanket gas
A gas phase maintained in a vessel containing liquid to protect the liquid against air contamination, to reduce the hazard of explosion, or to maintain pressure of the liquid. The source of the gas is external to the vessel.

blow case
A small vessel in which liquid is accumulated and then forced from the vessel by applying gas or air pressure above the liquid level.

blowdown
The act of emptying or depressuring a vessel. This may also refer to discarded material, such as blowdown water from a boiler or cooling tower.

boilaway test
Sometimes used to describe the GPA weathering test for LP-gas. Refer to definition for "weathering test".

bottoms
The liquid or residual matter which is withdrawn from the bottom of a fractionator or other vessel during processing or while in storage.

B-P mix
A liquefied hydrocarbon product composed chiefly of butanes and propane. If it originates in a refinery, it may also contain butylenes and propylene. More specifically, it conforms to the GPA specifications for commercial B-P mixes as described in GPA Standard 2140.

breathing
The movement of vapor in or out of an atmospheric pressure storage tank because of a change of level of the stored liquid, a change in the temperature of the vapor space above the liquid, or a change of atmospheric pressure.

bs&w (basic sediment and water)
Waste that collects in the bottom of vessels and tanks containing petroleum or petroleum products.

bubble point
The temperature at a specified pressure at which the first stable vapor forms above a liquid.

butane, commercial
A liquefied hydrocarbon consisting predominately of butane and/or butylene and which conforms to the GPA specification for commercial butane defined in GPA Standard 2140.

butane, normal
In commercial transactions, a product meeting the GPA specifications for commercial butane and, in addition, containing a minimum of 95 liquid volume percent normal butane. Chemically, normal butane is an aliphatic compound of the paraffin series having the chemical formula C_4H_{10} and having all of its carbon atoms joined in a straight chain.

calorimeter
An apparatus which is used to determine the heating value of a combustible material.

carbonyl sulfide
A chemical compound of the aldehyde group containing a carbonyl group and sulfur (COS). Sometimes a contaminant in natural gas and NGL. It may need to be removed in order to meet sulfur specifications.

casinghead gas
Unprocessed natural gas produced from a reservoir containing oil. It contains heavier hydrocarbon vapors and is usually produced under low pressure from a casing head on the well.

charcoal test
A test standardized by the Gas Processors Association and the American Gas Association for determining the natural gasoline content of a given natural gas. The gasoline is adsorbed from the gas on activated charcoal and then recovered by distillation. The test is prescribed in Testing Code 101-43, a joint publication of AGA and GPA.

chromatography
A technique for separating a mixture into individual components by repeated adsorption and desorption on a confined solid bed. It is used for analysis of natural gas and NGL.

Claus Process
A process to convert hydrogen sulfide into elemental sulfur by selective oxidation.

compressibility factor
A factor, usually expressed as "Z," which gives the ratio of the actual volume of gas at a given temperature and pressure to the volume of gas when calculated by the ideal gas law.

compression ratio
The ratio of the absolute discharge pressure from a compressor to the absolute intake pressure. Also applies to one cylinder of a reciprocating compressor and one or more stages of a rotating compressor.

condensate
The liquid formed by the condensation of a vapor or gas; specifically, the hydrocarbon liquid separated from natural gas because of changes in temperature and pressure when the gas from the reservoir was delivered to the surface separators. In a steam system it may be water that is condensed and returned to the boilers.

convergence pressure
The pressure at a given temperature for a hydrocarbon system of fixed composition at which the vapor-liquid equilibrium K-values of the various components in the system become, or tend to become, unity. The convergence pressure is used to adjust vapor-liquid equilibrium K-values to the particular system under consideration. (See TP-22)

copper strip test
A test using a small strip of pure copper to determine qualitatively the hydrogen sulfide corrosivity of a product. Refer to GPA LP-gas copper strip test (Copper Strip Method), ASTM D-1838 test procedure.

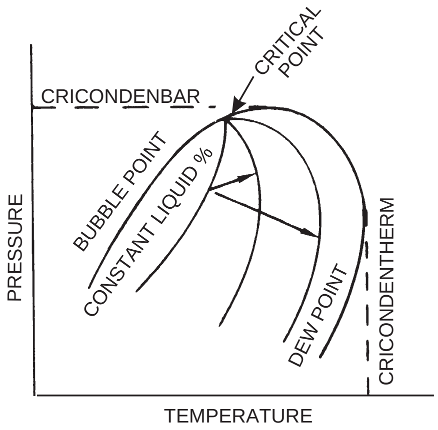

cricondenbar
The highest pressure at which liquid and vapor phases can exist at equilibrium in a multicomponent system.

cricondentherm
The highest temperature at which liquid and vapor phases can exist at equilibrium in a multicomponent system.

critical density
The density of a substance at its critical temperature and critical pressure.

critical pressure
The vapor pressure of a substance at its critical temperature.

critical temperature
For a pure component, the maximum temperature at which the component can exist as a liquid.

cryogenic plant
A gas processing plant which is capable of producing natural gas liquid products, including ethane, at very low operating temperatures, usually below minus 50°F.

cubic meter
A unit of volume measurement commonly used in international commerce for petroleum, petroleum products and natural gas. One cubic meter measured at 60°F = 264.172 U.S. gallons = 6.29 barrels = 35.315 cubic feet measured at 60°F.

deaerator
An item of equipment used for removing air or other non-condensible gases from a process stream or from steam condensate or boiler feed water.

debutanizer
A fractionator designed to separate butane (and more volatile components if present) from a hydrocarbon mixture.

dehydration
The act or process of removing water from gases or liquids.

demethanized product
A product from which essentially all methane and lighter materials have been removed.

demethanizer
A fractionator designed to separate methane (and more volatile components if present) from a hydrocarbon mixture.

depropanizer
A fractionator designed to separate propane (and more volatile components if present) from a hydrocarbon mixture.

desiccant
A substance used in a dehydrator to remove water and moisture. Also a material used to remove moisture from the air.

desulfurization
A process by which sulfur and sulfur compounds are removed from gases or liquid hydrocarbon mixtures.

dew point
The temperature at any given pressure, or the pressure at any given temperature, at which liquid initially condenses from a gas or vapor. It is specifically applied to the temperature at which water vapor starts to condense from a gas mixture (water dew point), or at which hydrocarbons start to condense (hydrocarbon dew point).

distillation
The process of separating materials by successively heating to vaporize a portion and then cooling to liquefy a part of the vapor. Materials to be separated must differ in boiling point and/or relative volatility.

doctor test
A qualitative method for detecting hydrogen sulfide and mercaptans in NGL. The test distinguishes between "sour" and "sweet" products.

dry gas
(1) Gas whose water content has been reduced by a dehydration process. (2) Gas containing little or no hydrocarbons commercially recoverable as liquid product. Gas in this second definition preferably should be called lean gas.

end point
The maximum temperature observed on the thermometer during an ASTM distillation test.

EP-mix (ethane-propane mix)
A product consisting of a mixture of essentially ethane and propane.

expansion turbine
A device which converts part of the energy content of a gas or liquid stream into mechanical work by expanding the gas or liquid through a turbine from which work is extracted.

extraction
The process of transferring one or more components from one liquid phase to another by virtue of different solubility in the two liquids. It is also used to indicate removal of one or more constituents from a stream.

field separator
A vessel in the oil or gas field for separating gas, hydrocarbon liquid, and water from each other.

flash point
The lowest temperature at which vapors from a hydrocarbon liquid will ignite. See ASTM D-56.

fractionation
See definition of "distillation." Generally used to describe separation of a mixture of hydrocarbons into individual products based on difference in boiling point and/or relative volatility.

freeze valve
A specially constructed and calibrated valve designed and used solely for determining the water content in propane product. See ASTM D-2713.

gas constant (R)
The constant multiplier in the Ideal Gas Law. Numerically, $R=PV/T$, if V is the volume of one mole of an ideal gas at temperature T and pressure P.

gas hydrate
Refer to definition of "hydrate".

gas injection
The injection of natural gas into a reservoir to maintain or increase the reservoir pressure or reduce the rate of decline of the reservoir pressure.

gas lift
A method for bringing crude oil or water to the surface by injecting gas into the producing well bore.

gas-oil ratio (GOR)
The ratio of gas to liquid hydrocarbon produced from a well. This may be expressed as standard cubic feet of gas per barrel of stock tank liquid.

gas processing
The separation of constituents from natural gas for the purpose of making salable products and also for treating the residue gas to meet required specifications.

gas processing plant
A plant which processes natural gas for recovery of natural gas liquids and sometimes other substances such as sulfur.

gas-well gas
The gas produced or separated at surface conditions from the full well stream produced from a gas reservoir.

gas-well liquids
The liquid separated at surface conditions from the full well stream produced from a gas reservoir.

gathering system
The network of pipelines which carry gas from the wells to the processing plant or other separation equipment.

gpm/GPM
(1) gpm (gallons per minute): The term used to describe the rate of flowing fluid in gallons per minute. (2) GPM — Preferably Gal/Mcf (gallons per thousand cubic feet): This term refers to the content in natural gas of components which are recoverable or recovered as liquid products.

heat medium (heating medium)
A material, whether flowing or static, used to transport heat from a primary source such as combustion of fuel to another material. Heating oil, steam, and an eutectic salt mixture are examples of heat mediums.

heating value (heat of combustion)
The amount of heat obtained by the complete combustion of a unit quantity of material. The gross, or higher, heating value is the amount of heat obtained when the water produced in the combustion is condensed. The net, or lower, heating value is the amount of heat obtained when the water produced in the combustion is not condensed.

heavy ends
The portion of a hydrocarbon mixture having the highest boiling point. Usually hexanes or heptanes and all heavier hydrocarbons are the heavy ends in a natural gas stream.

hexanes plus (or heptanes plus)
The portion of a hydrocarbon fluid mixture or the last component of a hydrocarbon analysis which contains the hexanes (or heptanes) and all hydrocarbons heavier than the hexanes (or heptanes).

hydrate
A solid material resulting from the combination of a hydrocarbon with water under pressure.

immiscible
Liquids that will not mix nor blend to give homogeneity are said to be immiscible.

ideal gas (also called "perfect" gas)
A gas that obeys the ideal gas law expressed as PV=RT, see Fig. 1-4.

inerts
Elements or compounds not acted upon chemically by the surrounding environment. Nitrogen and helium are examples of inert constituents of natural gases.

isobutane
In commercial transactions, a product meeting the GPA specification for commercial butane and, in addition, containing a minimum of 95 liquid volume percent isobutane. Chemically, a hydrocarbon of the paraffin series with the formula C_4H_{10} and having its carbon atoms branched.

jacket water
Water which fills, or is circulated through, a casing which partially or wholly surrounds a vessel or machine element in order to remove, add, or distribute heat in order to control the temperature within the vessel or element.

Joule-Thomson effect
The change in gas temperature which occurs when the gas is expanded at constant enthalpy from a higher pressure to a lower pressure. The effect for most gases at normal pressure, except hydrogen and helium, is a cooling of the gas.

lead acetate test
A method for detecting the presence of hydrogen sulfide by discoloration of paper which has been moistened with lead acetate solution. See ASTM D-2420.

lean gas
(1) The residue gas remaining after recovery of natural gas liquids in a gas processing plant. (2) Unprocessed gas containing little or no recoverable natural gas liquids.

lean oil
Absorption oil as purchased or recovered by the plant, or oil from which the absorbed constituents have been removed.

lift gas
Gas used in a gas lift operation.

light ends
The low-boiling, easily evaporated components of a hydrocarbon liquid mixture.

light hydrocarbons
The low molecular weight hydrocarbons such as methane, ethane, propane and butanes.

LNG (liquefied natural gas)
The light hydrocarbon portion of natural gas, predominately methane, which has been liquefied.

loading rack
A structural and piping installation alongside a railroad track or roadway used for the purpose of filling railroad tank cars or transport trucks.

LPG (liquefied petroleum gas)
Refer to definition of "LP-gas".

LP-gas (liquefied petroleum gas)
Predominately propane or butane, either separately or in mixtures, which is maintained in a liquid state under pressure within the confining vessel.

LRG (liquefied refinery gas)
Liquid propane or butane produced by a crude oil refinery. It may differ from LP-gas in that propylene and butylene may be present.

LTX (low temperature extraction unit)
A unit which uses the cooling of a constant enthalpy expansion to increase liquid recovery from streams produced from high pressure gas condensate reservoirs. Also called LTS (low temperature separation) unit.

Mcf
An abbreviation for one thousand cubic feet of gas.

MMcf
An abbreviation for one million cubic feet of gas.

mercaptan
Any of a homologous series of compounds of the general formula RSH. All mercaptans possess a foul odor.

miscible flood
A method of secondary recovery of fluids from a reservoir by injection of fluids that are miscible with the reservoir fluids.

natural gas
Gaseous form of petroleum. Consisting predominately of mixtures of hydrocarbon gases. The most common component is methane.

natural gasoline
A mixture of hydrocarbons, mostly pentanes and heavier, extracted from natural gas, which meets vapor pressure, end point, and other specifications for natural gasoline as adopted by the GPA. See GPA Standard 3132.

natural gas processing plant
Term used for gas processing plant, natural gasoline plant, gasoline plant, etc.

NGL (natural gas liquids)
Natural gas liquids are those hydrocarbons liquefied at the surface in field facilities or in gas processing plants. Natural gas liquids include ethane, propane, butanes, and natural gasoline.

odorant
An odoriferous compound added to natural or LP-gas to impart a distinctive odor for detection of fugitive vapors. Ethyl mercaptan is the most widely used odorant for LP-gas, while tertiary butyl mercaptan, usually mixed with small amounts of other compounds, is the predominant odorant for natural gas.

oil-well gas
Gas that is produced from an oil well.

on-stream factor
The percentage of time a unit is on-stream.

operating factor
The percentage of time a unit is performing the function for which it was designed.

outage
The vapor volume in a liquid vessel left for liquid expansion. Sometimes referred to as ullage.

packaged unit
A shop-assembled group of equipment and accessories which needs only foundations, inlet and outlet piping, and utility connections to make an operating unit.

packed column
A fractionation or absorption column filled with packing designed to give the required contact between the rising vapors and the descending liquid.

peak shaving
The use of non-conventional fuels to supplement the normal supply of pipeline gas during periods of extremely high demand.

pentane-plus
A hydrocarbon mixture consisting of isopentane (C_5H_{12}) and heavier components with higher boiling points.

pigging
A procedure for forcing a device through a pipeline for cleaning purposes, separating products, or inspecting the line.

pipeline gas
Gas which meets a transmission company's minimum specifications.

propane
A normally gaseous paraffinic compound (C_3H_8). The term includes all products covered by GPA specifications for commercial and HD-5 propane. See GPA Standard 2140.

propane, commercial
A liquefied hydrocarbon product consisting predominately of propane and/or propylene and which conforms to the GPA specification for commercial propane as defined in GPA Standard 2140.

propane HD-5
A special grade of propane consisting predominately of propane and which conforms to the GPA specification for HD-5 propane as defined in GPA Standard 2140.

raw gas
Unprocessed gas, or the inlet gas to a gas processing plant.

raw mix liquids
A mixture of natural gas liquids prior to fractionation. Also called "raw make".

real gas
A gas that does not obey the ideal gas law. Instead its behavior is expressed as $PV = zRT$ where z is the compressibility factor and $z \neq 1.0$. For an ideal gas $z = 1.0$, see Fig. 1-4.

recovery
That percent or fraction of a given component in the plant feed which is recovered as plant product.

recycle
Return of part of a process stream to a point upstream from where it was removed to enhance recovery or control.

reflux
In fractionation, the portion of condensed overhead returned to the column to enhance achievable purity of the overhead product.

reflux ratio
A way of giving a relative measurement to the volume of reflux. Usually referred either to the feed or overhead product.

relative density (See specific gravity)

relief system
The system for safely relieving excess pressure to avoid exceeding equipment design pressure.

residue
The material which remains after a separation process. (1) Residue gas is that gas remaining after the recovery of liquid products. (2) Residue may also be the heaviest liquid or solid remaining after distillation or reclaiming process.

retrograde condensation (vaporization)
Condensation or vaporization that is the reverse of expected behavior. Condensation caused by a decrease in pressure or an increase in temperature. Vaporization caused by an increase in pressure or a decrease in temperature.

rich gas
Gas feed to a gas processing plant for liquid recovery.

rich oil
The oil leaving the bottom of an absorber. It is the lean oil plus the absorbed constituents.

RVP (Reid Vapor Pressure)
The vapor pressure of a material measured by the Reid Method and apparatus as detailed in ASTM Test Procedure D-323.

s & w (See bs&w)

saturated compounds
Hydrocarbon compounds having no unsaturated carbon valence bonds. Natural gas and natural gas liquids are mixtures of saturated compounds.

saturated liquid
Liquid which is at its boiling point or is in equilibrium with a vapor phase in its containing vessel.

saturated vapor
Vapor at its dew point.

scf (standard cubic feet)
Gas volume at standard temperature and pressure.

shrinkage
The reduction in volume of a gas stream by removal of some of its constituents such as for recovered products, fuel, or losses.

SNG (Synthetic or Substitute Natural Gas)
The gas product resulting from the gasification of coal and/or gas liquids or heavier hydrocarbons.

solution gas
Gas which originates from the liquid phase in an oil reservoir.

sour
Liquids and gases are said to be "sour" if they contain hydrogen sulfide, carbon dioxide, and/or mercaptans above a specified level. It also is used to refer to the feed stream to a sweetening unit.

sour gas
Gas containing undesirable quantities of hydrogen sulfide, mercaptans, and/or carbon dioxide. It also is used to refer to the feed stream to a sweetening unit.

specific gravity
The ratio of the mass of a given volume of a substance to that of another equal volume of another substance used as standard. Unless otherwise stated, air is used as the standard for gases and water for liquids, with the volumes measured at 60°F and standard atmospheric pressure.

splitter
A name applied to fractionators, particularly those separating isomers (e.g., butane splitter refers to a tower producing most of the isobutane in the feed as overhead and most of the normal butane in the feed as bottoms).

sponge absorbent
An absorbent for recovering vapors of a lighter absorbent that is used in the main absorption process of a gas processing plant.

stabilized condensate
Condensate that has been stabilized to a definite vapor pressure in a fractionation system.

stabilizer
A fractionation column designed to reduce the vapor pressure of a liquid stream.

stage separation system
A system of separators where the liquid portion of the well effluent is separated from formation gas and flash vapors.

still
The column where the absorbed product is recovered from the lean absorption oil. In plants using a low molecular weight absorption oil, the still is designed as a fractionation column. In plants using a high molecular weight absorption oil, the still may use steam or other fluids as stripping medium. Also used to refer to regenerators in amine treating and glycol dehydration systems.

strapping
A term applied to the process of calibrating liquid storage capacity of storage tanks in increments of depth.

stream day
A continuous 24 hour period of plant operation.

stripper
A column wherein absorbed constituents are stripped from the absorption oil. The term is applicable to columns using a stripping medium, such as steam or gas.

stripping factor
An expression used to describe the degree of stripping. Mathematically, it is KV/L, the reciprocal of the absorption factor.

stripping medium
As stated under "stripper", the medium may be steam, gas, or other material that will increase the driving force for stripping.

sulfur
A yellow, non-metallic chemical element. In its elemental state, it exists in both crystalline and amorphous forms. In many gas streams, sulfur may be found as volatile sulfur compounds, such as hydrogen sulfide, sulfur oxides, mercaptans, and carbonyl sulfide. Reduction of the concentration of these gaseous sulfur compounds is often necessary for corrosion control and possibly for health and safety reasons.

sulfur dioxide (SO_2)
A heavy, colorless, suffocating gas that is chemically an oxide of sulfur. Conversion of the gaseous sulfur oxides to sulfur is necessary for corrosion control, for health and safety reasons, and for complying with governmental standards.

sweet
Gas containing essentially no objectionable sulfur compounds. Also, treated gas leaving a sweetening unit.

sweet gas
Gas which has no more than the maximum sulfur and/or CO_2 content defined by (1) the specifications for the sales gas from a plant; (2) the definition by a legal body. Also, the treated gas leaving a sweetening unit.

temperature correction factor
A factor for correcting volume at a given temperature to that at a specific reference temperature. Reference temperature most commonly used in the petroleum industry is 60°F.

therm
A unit of gross heating value equivalent to 100,000 Btu.

tonne
A unit of mass measurement, commonly used in international petroleum commerce; an expression for the metric ton, or 1000 kilograms.

trayed column
A vessel wherein gas and liquid, or two essentially immiscible liquids, are contacted, usually counter-currently on trays. Also refer to packed column.

turboexpander
Refer to definition of "expansion turbine."

ullage (See outage)

unsaturated compounds
Hydrocarbon compounds having one or more unsaturated valence bonds, i.e., ethylene, propylene. These compounds are not found in natural gas streams or gas liquids because of their relatively high chemical reactivity. Unsaturates are produced by a thermal cracking or chemical reaction and can be found in synthetic gas (SNG) or light refinery gases (LRG).

vapor pressure (true vapor pressure)
The pressure exerted by the equilibrium vapor of a liquid when confined in a closed previously evacuated tank or test apparatus.

vapor pressure gasoline
A descriptive phrase for natural gasoline meeting a specified vapor pressure.

vapor pressure, GPA
Vapor pressure as specified by GPA procedures.

vapor recovery
Equipment or process for the recovery of desired components from stock tank vapors or vapors from some other source.

volatile sulfur
An obsolete term referring to sulfur compounds that will vaporize readily (See sulfur).

weathering
The evaporation of liquid caused by exposing it to the conditions of atmospheric temperature and pressure. Partial evaporation of liquid by use of heat may also be called weathering.

weathering test
A GPA test for LP-gas for the determination of heavy components in a sample by evaporation under specified conditions.

weight in air
Weight compared to a standard with no correction for air buoyancy.

wellhead
The assembly of fittings, valves, and controls located at the surface and connected to the flow lines, tubing, and casing of the well so as to control the flow from the reservoir.

wet gas
(1) A gas containing water, or a gas which has not been dehydrated. (2) A term synonymous with rich gas. Refer to definition of "rich gas".

Wobbe number
A number proportional to the heat input to a burner at constant pressure. In British practice, it is the gross heating value of a gas divided by the square root of its gravity. Widely used in Europe, together with a measured or calculated flame speed, to determine interchangeability of fuel gases.

Conversion Factors

In these tables, factors for conversion, including conversions to the International System of Units (SI), are based on ASTM Standard for Metric Practice, E380-91. The latest edition of this publication should be studied for more detail on the SI system, including definitions and symbols.

In calculating derived factors in the tables that follow, exact conversions were used, when available, rather than the 7-digit round-offs listed in ASTM E380 conversion tables. Derived factors given below are rounded to the same number of significant digits as the source factors.

In any conversion of fundamental measurement units, some confusion may result due to redefinition of units used in earlier tables. For example, in 1959 a small refinement was made in the definition of the yard, which changed its length from 3600/3937 meter (or 1 inch = 25.4000508 mm) to 0.9144 m exactly (or 1 inch = 25.4 mm exactly). The tables below are based on the new definition, but one should be aware that where U.S. land measurements are concerned, the old relationship applies. Refer to ASTM E380-91, note 13, for more detail.

Energy Units Conversion

Confusion may arise in the definition of units for heat or energy. In the tables below, the Btu (IT) and calorie (IT) are used. These are the heat units recommended by the International Conference on the Properties of Steam, as defined:

1 Btu (IT) = 1055.055 852 62 joule (exactly)
1 Calorie (IT) = 4.186 800 joule (exactly)

For information only, other definitions that may be used elsewhere:

1 Btu (Mean) = 1055.87 joule
1 Btu (39°F) = 1059.67 joule
1 Btu (60°F) = 1054.68 joule
1 Btu (Thermochemical) = 1054.350 joule
1 calorie (Mean) = 4.190 02 joule

FIG. 1-2

Conversion Factor Tables

Velocity
(Length/unit of time)

ft/sec	ft/min	Miles/hr (U.S. Statute)	m/sec	m/min	km/hr
1	60	0.6818182	0.3048	18.288	1.09728
0.01666667	1	0.01136364	5.08 x 10^{-3}	0.3048	0.018288
1.466667	88	1	0.44704	26.8224	1.609344
3.280840	196.8504	2.236936	1	60	3.6
0.05468066	3.280840	0.03728227	0.016667	1	0.06
0.9113444	54.68066	0.6213712	0.2777778	16.66667	1

Energy

Ft-lbf	Kg-meter	Btu (IT)	Kilo-calorie (IT)	Hp-hr	Kilowatt-hr	joule (J)
1	0.1382550	1.285068 x 10^{-3}	3.238316 x 10^{-4}	5.050505 x 10^{-7}	3.766161 x 10^{-7}	1.355818
7.233014	1	9.294911 x 10^{-3}	2.342278 x 10^{-3}	3.653037 x 10^{-6}	2.724070 x 10^{-6}	9.806650
778.1692	107.5858	1	0.2519958	3.930148 x 10^{-4}	2.930711 x 10^{-4}	1055.056
3088.025	426.9348	3.968321	1	1.559609 x 10^{-3}	1.163 x 10^{-3}	4186.8
1980000	273744.8	2544.434	641.1865	1	0.7456999	2684520.
2655224	367097.8	3412.142	859.8452	1.341022	1	3600000.
0.7375621	0.1019716	9.478171 x 10^{-4}	2.388459 x 10^{-4}	3.725061 x 10^{-7}	2.777778 x 10^{-7}	1

FIG. 1-2 (Cont'd)

Conversion Factor Tables

Length

Inches	Feet	Yards	Miles (U.S. Statute)	Millimeters	Meters
1	0.08333333	0.02777778	1.578283 x 10^{-5}	25.4	0.0254
12	1	0.3333333	1.893939 x 10^{-4}	304.8	0.3048
36	3	1	5.681818 x 10^{-4}	914.4	0.9144
63360.	5280	1760	1	1609344	1609.344
0.03937008	3.280840 x 10^{-3}	1.093613 x 10^{-3}	6.213712 x 10^{-7}	1	0.001
39.37008	3.280840	1.093613	6.213712 x 10^{-4}	1000	1

Area

Sq inches	Sq feet	Sq yards	Acres	Sq miles (U.S. Statute)	Sq meters
1	6.944444 x 10^{-3}	7.716049 x 10^{-4}	1.594225 x 10^{-7}	2.490977 x 10^{-10}	6.4516 x 10^{-4}
144	1	0.1111111	2.295684 x 10^{-5}	3.587006 x 10^{-8}	9.290304 x 10^{-2}
1296	9	1	2.066116 x 10^{-4}	3.228306 x 10^{-7}	0.8361274
6272640.	43560.	4840.	1	0.0015625	4046.856
4014489600	27878400	3097600.	640	1	2589988.
1550.0031	10.76391	1.195990	2.471054 x 10^{-4}	3.861022 x 10^{-7}	1

Capacity–volume

Cu inches	Cu feet	Cu yards	Liters	Cu meters	U.S. gallons	Imp. gallons	Barrels (42 U.S. gal)
1	5.787037 x 10^{-4}	2.143347 x 10^{-5}	0.01638706	1.638706 x 10^{-5}	4.329004 x 10^{-3}	3.604649 x 10^{-3}	1.030715 x 10^{-4}
1728	1	0.03703704	28.31685	0.02831685	7.480520	6.228833	0.1781076
46656	27	1	764.5549	0.7645549	201.9740	168.1784	4.808905
61.02374	0.03531467	1.307951 x 10^{-3}	1	0.001	0.2641720	0.2199692	6.289810 x 10^{-3}
61023.74	35.31467	1.307951	1000	1	264.1720	219.9692	6.289810
231.0000	0.1336806	4.951132 x 10^{-3}	3.785412	0.003785412	1	0.8326739	2.380952 x 10^{-2}
277.4196	0.1605437	5.946064 x 10^{-3}	4.546092	0.004546092	1.200950	1	0.02859406
9702.001	5.614584	0.2079475	158.9873	0.1589873	42	34.97230	1

Mass

Ounces	Pounds	Short tons	Long tons	Kilograms	Metric tons
1	0.0625	3.125 x 10^{-5}	2.790179 x 10^{-5}	0.02834952	2.834950 x 10^{-5}
16	1	5 x 10^{-4}	4.464286 x 10^{-4}	0.4535924	4.535924 x 10^{-4}
32000	2000	1	0.8928571	907.1847	0.9071847
35840	2240	1.12	1	1016.047	1.016047
35.27396	2.204623	1.102311 x 10^{-3}	9.842065 x 10^{-4}	1	0.001
35273.96	2204.623	1.102311	0.9842065	1000	1

Weight per unit of area

Lb/sq ft	Lb/sq in	kg/sq cm	kg/sq m	Short tons/sq ft	Long tons/sq ft	kg/sq mm
1	0.006944444	4.882428 x 10^{-4}	4.882428	0.0005	4.464286 x 10^{-4}	4.882428 x 10^{-6}
144	1	0.07030695	703.0695	0.072	0.06428571	7.030695 x 10^{-4}
2048.161	14.22334	1	10000	1.024081	0.9143578	0.01
0.2048161	0.001422334	0.0001	1	1.024081 x 10^{-4}	9.143578 x 10^{-5}	0.000001
2000	13.88889	0.9764855	9764.855	1	0.8928571	0.009764855
2240	15.55556	1.093664	10936.64	1.12	1	0.01093664
204816.1	1422.334	100	1 000 000	102.4081	91.43578	1

Weight per unit of area, pressure

kgf/cm^2	kPa	lbf/in^2	Mm mercury (0°C)	in. mercury (32°F)	in. water (39.2°F)	atmospheres (standard)	Millibars
1	98.06650	14.22334	735.561	28.9591	393.712	0.9678411	980.6650
0.01019716	1	0.1450377	7.50064	0.295301	4.01474	0.009869233	10
0.07030695	6.894757	1	51.7151	2.03603	27.6807	0.06804596	68.94757
0.00135951	0.133322	0.0193367	1	0.0393701	0.535253	0.00131579	1.33322
0.0345315	3.38638	0.491153	25.4	1	13.5954	0.0334210	33.8638
0.00253993	0.249082	0.0361263	1.86827	0.0735541	1	0.00245825	2.49082
1.033227	101.3250	14.69595	760.002	29.9213	406.794	1	1013.250
0.001019716	0.1	0.01450377	0.750064	0.0295301	0.401474	9.869233 x 10^{-4}	1

FIG. 1-3

A.P.I. and Baumé Gravity Tables and Weight Factors

A.P.I. gravity	Baumé gravity	Specific gravity	Lb/ U.S. gal	U.S. gal/ lb
0	10.247	1.0760	8.962	0.1116
1	9.223	1.0679	8.895	0.1124
2	8.198	1.0599	8.828	0.1133
3	7.173	1.0520	8.762	0.1141
4	6.148	1.0443	8.698	0.1150
5	5.124	1.0366	8.634	0.1158
6	4.099	1.0291	8.571	0.1167
7	3.074	1.0217	8.509	0.1175
8	2.049	1.0143	8.448	0.1184
9	1.025	1.0071	8.388	0.1192
10	10.00	1.0000	8.328	0.1201
11	10.99	0.9930	8.270	0.1209
12	11.98	0.9861	8.212	0.1218
13	12.97	0.9792	8.155	0.1226
14	13.96	0.9725	8.099	0.1235
15	14.95	0.9659	8.044	0.1243
16	15.94	0.9593	7.989	0.1252
17	16.93	0.9529	7.935	0.1260
18	17.92	0.9465	7.882	0.1269
19	18.90	0.9402	7.830	0.1277
20	19.89	0.9340	7.778	0.1286
21	20.88	0.9279	7.727	0.1294
22	21.87	0.9218	7.676	0.1303
23	22.86	0.9159	7.627	0.1311
24	23.85	0.9100	7.578	0.1320
25	24.84	0.9042	7.529	0.1328
26	25.83	0.8984	7.481	0.1337
27	26.82	0.8927	7.434	0.1345
28	27.81	0.8871	7.387	0.1354
29	28.80	0.8816	7.341	0.1362
30	29.79	0.8762	7.296	0.1371
31	30.78	0.8708	7.251	0.1379
32	31.77	0.8654	7.206	0.1388
33	32.76	0.8602	7.163	0.1396
34	33.75	0.8550	7.119	0.1405
35	34.73	0.8498	7.076	0.1413
36	35.72	0.8448	7.034	0.1422
37	36.71	0.8398	6.993	0.1430
38	37.70	0.8348	6.951	0.1439
39	38.69	0.8299	6.910	0.1447
40	39.68	0.8251	6.870	0.1456
41	40.67	0.8203	6.830	0.1464
42	41.66	0.8155	6.790	0.1473
43	42.65	0.8109	6.752	0.1481
44	43.64	0.8063	6.713	0.1490
45	44.63	0.8017	6.675	0.1498
46	45.62	0.7972	6.637	0.1507
47	50.61	0.7927	6.600	0.1515
48	50.60	0.7883	6.563	0.1524
49	50.59	0.7839	6.526	0.1532
50	50.58	0.7796	6.490	0.1541
51	50.57	0.7753	6.455	0.1549
52	51.55	0.7711	6.420	0.1558
53	52.54	0.7669	6.385	0.1566
54	53.53	0.7628	6.350	0.1575
55	54.52	0.7587	6.316	0.1583
56	55.51	0.7547	6.283	0.1592
57	56.50	0.7507	6.249	0.1600
58	57.49	0.7467	6.216	0.1609
59	58.48	0.7428	6.184	0.1617
60	59.47	0.7389	6.151	0.1626
61	60.46	0.7351	6.119	0.1634
62	61.45	0.7313	6.087	0.1643
63	62.44	0.7275	6.056	0.1651
64	63.43	0.7238	6.025	0.1660
65	64.42	0.7201	5.994	0.1668
66	65.41	0.7165	5.964	0.1677
67	66.40	0.7128	5.934	0.1685
68	67.39	0.7093	5.904	0.1694
69	68.37	0.7057	5.874	0.1702
70	69.36	0.7022	5.845	0.1711
71	70.35	0.6988	5.817	0.1719
72	71.34	0.6953	5.788	0.1728
73	72.33	0.6919	5.759	0.1736
74	73.32	0.6886	5.731	0.1745
75	74.31	0.6852	5.703	0.1753
76	75.30	0.6819	5.676	0.1762
77	76.29	0.6787	5.649	0.1770
78	77.28	0.6754	5.622	0.1779
79	78.27	0.6722	5.595	0.1787
80	79.26	0.6690	5.568	0.1796
81	80.25	0.6659	5.542	0.1804
82	81.24	0.6628	5.516	0.1813
83	82.23	0.6597	5.491	0.1821
84	83.22	0.6566	5.465	0.1830
85	84.20	0.6536	5.440	0.1838
86	85.19	0.6506	5.415	0.1847
87	86.18	0.6476	5.390	0.1855
88	87.17	0.6446	5.365	0.1864
89	88.16	0.6417	5.341	0.1872
90	89.15	0.6388	5.316	0.1881
91	90.14	0.6360	5.293	0.1889
92	91.13	0.6331	5.269	0.1898
93	92.12	0.6303	5.246	0.1906
94	93.11	0.6275	5.222	0.1915
95	94.10	0.6247	5.199	0.1924
96	95.09	0.6220	5.176	0.1932
97	96.08	0.6193	5.154	0.1940
98	97.07	0.6166	5.131	0.1949
99	98.06	0.6139	5.109	0.1957
100	99.05	0.6112	5.086	0.1966

The relation of Degrees Baumé or A.P.I. to Specific Gravity is expressed by the following formulas:

For liquids lighter than water:

$$\text{Degrees Baumé} = \frac{140}{G} - 130, \qquad G = \frac{140}{130 + \text{Degrees Baumé}}$$

$$\text{Degrees A.P.I.} = \frac{141.5}{G} - 131.5, \qquad G = \frac{141.5}{131.5 + \text{Degrees A.P.I.}}$$

For liquids heavier than water:

$$\text{Degrees Baumé} = 145 - \frac{145}{G}, \qquad G = \frac{145}{145 + \text{Degrees Baumé}}$$

G = Specific Gravity = ratio of the weight of a given volume of oil at 60°F to the weight of the same volume of water at 60°F.

The above tables are based on the weight of 1 U.S. gallon (3.785 liters) of oil with a volume of 231 cubic inches (3785 cubic centimeters) at 60°F (15.56°C) in air at 760mm of pressure and 50% humidity. Assumed weight of 1 U.S. gallon of water at 60°F in air is 8.32828 pounds (3.77764 kg).

To determine the resulting gravity by mixing oils of different gravities:

$$D = \frac{md_1 + nd_2}{m + n}$$

D = Density or Specific Gravity of mixture
m = Volume proportion of oil of d_1 density
n = Volume proportion of oil of d_2 density
d_1 = Specific Gravity of m oil
d_2 = Specific Gravity of n oil

FIG. 1-4

Values of the Gas Constant R in PV = nRT

Basis of units listed below is 22.4140 liters at 0°C and 1 atm for the volume of 1 g mole. All other values calculated from conversion factors listed in tables.

n	Temperature	Pressure	Volume	R	n	Temperature	Energy	R
gm mol	K	atm	liter	0.082 057 477	gm mol	K	calorie	1.985 9
gm mol	K	atm	cm^3	82.057	gm mol	K	joule	8.314 5
gm mol	K	mm Hg	liter	62.364				
gm mol	K	bar	liter	0.083 145	lb mol	°R	Btu	1.985 9
gm mol	K	kg/cm^2	liter	0.084 784	lb mol	°R	hp-hr	0.000 780 48
gm mol	K	kPa	m^3	0.008 314 5	lb mol	°R	Kw-hr	0.000 582 00
lb mol	°R	atm	ft^3	0.730 24	lb mol	°R	ft-lb	1 545.3
lb mol	°R	in.Hg	ft^3	21.850				
lb mol	°R	mm Hg	ft^3	554.98	k mol	K	joule	8 314.5
lb mol	°R	lb/in^2	ft^3	10.732				
lb mol	°R	lb/ft^2	ft^3	1 545.3				
lb mol	K	atm	ft^3	1.3144				
lb mol	K	mm Hg	ft^3	998.97				
k mol	K	kPa	m^3	8.3145				
k mol	K	bar	m^3	0.083 145				

FIG. 1-5

Commercial Base Pressure Conversion Factors

(Factors to Convert to Other Base Pressures)

Given base pressure (See notes 1&2)	13.9	14.65	101.325 kPa @ 15°C	760 mm Hg or 14.696	14.696 @ 59°F	14.7	14.73	14.73 Sat.	30" Hg	14.9	15.025	16.4
13.9	1.0000	0.9488	0.9440	0.9458	0.9440	0.9456	0.9437	0.9603	0.9434	0.9329	0.9251	0.8476
14.65	1.0540	1.0000	0.9950	0.9969	0.9950	0.9966	0.9946	1.0122	0.9943	0.9832	0.9750	0.8933
101.325 kPa @ 15°C	1.0593	1.0050	1.0000	1.0019	1.0000	1.0016	0.9996	1.0173	0.9993	0.9882	0.9800	0.8978
14.696 or 760 mm Hg	1.0573	1.0031	0.9981	1.0000	0.9981	0.9997	0.9977	1.0153	0.9974	0.9863	0.9781	0.8960
14.696 @ 59°F	1.0593	1.0050	1.0000	1.0019	1.0000	1.0016	0.9996	1.0173	0.9993	0.9882	0.9800	0.8978
14.7	1.0576	1.0034	0.9984	1.0003	0.9984	1.0000	0.9980	1.0156	0.9976	0.9866	0.9784	0.8963
14.73	1.0597	1.0055	1.0004	1.0023	1.0004	1.0020	1.0000	1.0177	0.9997	0.9886	0.9804	0.8982
14.73 Sat.	1.0413	0.9880	0.9830	0.9849	0.9830	0.9846	0.9826	1.0000	0.9823	0.9714	0.9633	0.8826
30" Hg	1.0601	1.0058	1.0007	1.0026	1.0007	1.0024	1.0003	1.0180	1.0000	0.9889	0.9807	0.8984
14.9	1.0719	1.0171	1.0119	1.0139	1.0119	1.0136	1.0115	1.0294	1.0112	1.0000	0.9917	0.9085
15.025	1.0809	1.0256	1.0204	1.0224	1.0204	1.0221	1.0200	1.0381	1.0197	1.0084	1.0000	0.9162
16.4	1.1795	1.1195	1.1138	1.1159	1.1138	1.1156	1.1134	1.1331	1.1130	1.1007	1.0915	1.0000

FIG. 1-6

Pressure Equivalents

psia	in.Hg @ 32°F	mm Hg @ 0°C	kPa
1	2.03603	51.7151	6.8948
0.491153	1	25.400	3.38638
0.019337	0.3937	1	0.1333
0.14504	0.2953	7.5006	1
13.9	28.3008	718.8399	95.83772
14.65	29.82784	757.62621	101.00882
14.696	29.9215	760.0051	101.32598
14.6959	29.9213	760.00	101.3250
14.7	29.9296	760.21197	101.3536
14.73	29.9907	761.7634	101.5604
14.73456	30.00	761.999	101.5918
14.9	30.3368	770.55499	102.73252
15.025	30.59135	777.01937	103.5944
16.4	33.39532	848.12764	113.0747

FIG. 1-7

Viscosity Relationships

$$\text{Kinematic viscosity (centistokes)} = \frac{\text{absolute viscosity (centipoises)}}{\text{density (g/cm}^3\text{)*}}$$

$$\text{ft}^2\text{/sec} = \text{(centistokes)}(1.07639 \times 10^{-5})$$

$$\text{centistokes} = (\text{ft}^2\text{/sec})(92903.4)$$

* Usually same as specific gravity.

APPROXIMATE VISCOSITY CONVERSIONS

ft^2/sec (50–100 SSU) = [(SSU)(2.433×10^{-6})] – (0.00210/SSU)
ft^2/sec (100–350 SSU) = [(SSU)(2.368×10^{-6})] – (0.00145/SSU)
ft^2/sec (over 350 SSU) = [SSU (at 100°F) (2.3210×10^{-6})]
centistokes (50–100 SSU) = [(SSU) (0.226)] – (205.3/SSU)
centistokes (100–350 SSU) = [(SSU) (0.220)] – (147.7/SSU)
centistokes (over 350 SSU) = [SSU (at 100°F or 37.8°C) (0.21576)]
centistokes (over 350 SSU) = [SSU (at 210°F or 98.9°C) (0.21426)]
centistokes (over 500 SSU) = [SSU (at 122°F or 50°C) (2.120)]
centistokes (over 300 Redwood #1) = [Redwood #1 (Standard) (0.255)]
centistokes (over 50 Redwood #2) = [Redwood #2 (Admiralty) (2.3392)]
centistokes (over 18 Engler) = (Engler) (7.389)
centistokes (over 20 Stormer) = (Stormer) (2.802)
centistokes (over 1.0 Demler #10) = (Demler #10) (31.506)
centistokes (over 1.3 Demler #1) = (Demler #1) (3.151)
centistokes (over 14 Parlin #20) = (Parlin Cup #20) (61.652)
centistokes (over 230 Ford #4) = (Ford Cup #4) (3.753)
centistokes = 6200 Barbey

VISCOSITY – UNIT CONVERSIONS

KINEMATIC VISCOSITY

MULTIPLY	BY	TO OBTAIN
ft^2/sec	92903.04	centistokes
ft^2/sec	0.092903	sq meters/sec
sq meters/sec	10.7639	ft^2/sec
sq meters/sec	1 000 000.0	centistokes
centistokes	0.000 001	sq meters/sec
centistokes	0.000 010 763 9	ft^2/sec

ABSOLUTE OR DYNAMIC VISCOSITY

lbf-sec/ft^2	47880.26	centipoises
lbf-sec/ft^2	47.8803	Pascal-sec
centipoises	0.000 102	kg-sec/sq meter
centipoises	0.000 020 885 4	lbf-sec/sq ft*
centipoises	0.001	Pascal-sec
Pascal-sec	0.020 885 4	lbf-sec/sq ft
Pascal-sec	1000	centipoises

* Sometimes absolute viscosity is given in terms of pounds mass. In this case —
(centipoises)(0.000672) = lbm/ft • sec.

ABSOLUTE TO KINEMATIC VISCOSITY

centipoises	1/density (g/cm^3)	centistokes
centipoises	0.000 671 97/density (lb/ft^3)	ft^2/sec
lbf-sec/ft^2	32.174/density (lb/ft^3)	ft^2/sec
kg-sec/m^2	9.80665/density (kg/m^3)	sq meters/sec
Pascal-sec	1000/density (g/cm^3)	centistokes

KINEMATIC TO ABSOLUTE VISCOSITY

centistokes	density (g/cm^3)	centipoises
sq meters/sec	(0.10197)[density (kg/m^3)]	kg-sec/sq meter
ft^2/sec	(0.03108) [density (lb/ft^3)]	lbf-sec/ft^2
ft^2/sec	(1488.16) [density (lb/ft^3)]	centipoises
centistokes	(0.001) [density (g/cm^3)]	Pascal-sec
sq meters/sec	(1000) [density (g/cm^3)]	Pascal-sec

1 calorie (15°C) = 4.185 80 joule
1 calorie (20°C) = 4.181 90 joule
1 calorie (Thermochemical) = 4.184 000 joule

The fundamental relationship between the Btu and the calorie:

$$\frac{\text{gram–pound relationship}}{\text{Fahrenheit–Celsius scale relationship}}$$

or: $$\text{Btu} \times \frac{453.592\ 29}{1.8} = \text{calorie (IT, mean, or other)}$$

1 therm = 100,000 Btu = 105.5056 x 10^6 J
= 105,505.6 kJ = 1.055 056 x 10^5 kJ.
(Btu denotes British Thermal Units)
(ref: Physical Properties of Natural Gases, Gas Unie, 1988 p. 23)

1 decatherm = 1,000,000 Btu = 1 MMBtu = 10^6 Btu

1 thermie = 1 Mcal (15°C) = 4.1858 x 10^6 J

1 terajoule = 1 TJ = 1 x 10^{12} Joule

Gas Volume Relationships

Gas volume are commonly referred to in "standard" or "normal" units.

Standard conditions commonly refers to gas volumes measured at:

15°C and 101.3250 kPa

60°F and 14.696 psia

These P & T conditions are often indicated as Standard Temperature and Pressure, abbreviated to STP. However standard conditions can refer to other combinations of pressure and temperature as might be agreed between gas buyer and seller. There is no internationally accepted standard for STP. In 1980 GPA adopted 15°C, 101.3250 kPa (abs) as standard conditions for SI units. Thus standard molar volumes are:

23.645 std m^3/kmol at 15°C (288.15 K), 101.3250 kPa. GPA SI standard conditions.

379.49 std ft^3/lb mol at 60°F (519.67°R), 14.696 psia.

Other standard conditions sometimes used are:

P	T
101.3250 kPa	20°C
100.0 kPa	15°C
14.73 psia	60°F
14.40 psia (99.28 kPa) and others	60°F

Normal conditions refers to gas volumes measured at 0°C and 101.3250 kPa (760 mm Hg), often abbreviated to NTP (Normal Temperature and Pressure). The normal molar volume is:

22.414 Nm^3/kmol at 0°C (273.15 K), 101.3250 kPa

Example 1-1 — Consider 100 kg of 16 mole weight gas. This is equivalent to 220.5 pounds and 6.25 kmol (13.78 lb mols). The volume occupied by this mass can be found by using the relationships presented above:

147.8 std m^3 (15°C, 101.3250 kPa)

140.1 Nm^3 (0°C, 101.3250 kPa)

5,229 std ft^3 (scf) (60°F, 14.696 psia)

Thus the following volume conversions individually represent the same mass (kg, kmol or lb, lb mol) of gas assuming either constant z or ideal gas behavior.

1 Nm^3 = 37.33 scf. Same mass on either side of this equation.

1 std m^3 = 35.38 scf. Again, same mass on either side of this equation, but 1 std m^3 (15°C) contains slightly smaller mass than in 1 Nm^3 (0°C). Gas is less dense at 15°C than at 0°C.

Other Useful Relationships

Physical conversion of ft^3 and m^3 is given in Fig. 1-2.

Absolute zero: 0 K (–273.15°C), 0°R (–459.67°F).

1 Thermochemical unit x 0.999 331 2 = IT Unit (Btu or other)

1 Thermochemical cal/gm x 1.8 x 0.999 331 2 = IT Btu/lb

Entropy, 1 Btu/(lb • °R) = 4.186 8 kJ/(kg • K)

Enthalpy, 1 Btu/lb = 2.326 kJ/kg

7000 Grains = 1 lb_m

1 Grain = 64.798 91 mg

1 Grain/100 scf = 22.888 352 mg/m^3

1 Grain/U.S. gallon = 17.118 06 g/m^3

1 Hectare = 10 000 m^2 = 100 are = 2.471 acres

°C = 5/9 (°F – 32)

°F = 9/5 (°C) + 32

K = °C + 273.15 = 5/9 °R

°R = °F + 459.67 = 1.8 K

1 newton of force = 1 kg • m/s^2 = 1 N

1 pascal pressure = 1 N/m^2 = 1 Pa

Notes:

1. Pressure is stated as psia except where specifically indicated otherwise.
2. Base temperature is assumed to be 60°F except where specifically indicated otherwise.
3. Saturated water vapor pressure at 60°F equals 0.2561 psi (International Critical Tables).
4. 60°F = 15.6°C 15°C = 59°F
5. 30" Hg @ 32°F is normally assumed equivalent to 14.73 psi commercially.
6. To convert heating value or gas price from one base pressure to another, the reciprocals of the above conversion factors apply.
7. kPa represents kPa (abs) unless indicated as kPa (ga) for gauge pressure.
8. kJ/(kmol • K) = kJ/(kmol • °C)

FIG. 1-8

Approximate Atomic Weights

Name	Symbol	Atomic Number	Approximate Atomic Weight
Aluminum	Al	13	27.0
Antimony	Sb	51	121.8
Argon	Ar	18	39.9
Arsenic	As	33	74.9
Barium	Ba	56	137.3
Boron	B	5	10.8
Bromine	Br	35	79.9
Cadmium	Cd	48	112.4
Calcium	Ca	20	40.1
Carbon	C	6	12.0
Chlorine	Cl	17	35.5
Chromium	Cr	24	52.0
Cobalt	Co	27	58.9
Copper	Cu	29	63.5
Fluorine	F	9	19.0
Gold	Au	79	197.0
Helium	He	2	4.0
Hydrogen	H	1	1.0
Iodine	I	53	126.9
Iron	Fe	26	55.8
Lead	Pb	82	207.2
Lithium	Li	3	6.9
Magnesium	Mg	12	24.3
Manganese	Mn	25	54.9
Mercury	Hg	80	200.6
Molybdenum	Mo	42	95.9
Neon	Ne	10	20.2
Nickel	Ni	28	58.7
Nitrogen	N	7	14.0
Oxygen	O	8	16.0
Phosphorus	P	15	31.0
Platinum	Pt	78	195.1
Potassium	K	19	39.1
Radon	Rn	86	222.0
Selenium	Se	34	79.0
Silicon	Si	14	28.1
Silver	Ag	47	107.9
Sodium	Na	11	23.0
Strontium	Sr	38	87.6
Sulfur	S	16	32.1
Tin	Sn	50	118.7
Titanium	Ti	22	47.9
Tungsten	W	74	183.9
Vanadium	V	23	50.9
Zinc	Zn	30	65.4

Note: Precise values of atomic weights vary. For example 1959 values were based on oxygen = 16.000, whereas 1961 values use the isotope C^{12} = 12.000 as the basis. The above values are rounded to one decimal place for use in less precise calculations.

FIG. 1-9

Gaseous Composition of Air

Gas	Symbol	Molecular Weight	Volume %
Basic constituents			
Nitrogen	N_2	28.013	78.084 ± 0.004 %
Oxygen	O_2	32.0	20.946 ± 0.002 %
Argon	Ar	39.948	0.934 ± 0.001 %
Trace gases			
Neon	Ne	20.183	18.12 ± 0.04 ppm
Helium	He	4.003	5.239 ± 0.05 ppm
Krypton	Kr	83.80	1.14 ± 0.01 ppm
Xenon	Xe	131.30	0.087 ± 0.001 ppm
Hydrogen	H_2	2.016	0.5 ± 0.01 ppm
Impurities			
Water	H_2O	18.015	0.1 – 2.8 %
Carbon dioxide	CO_2	44.011	300 ± 30 ppm
Methane	CH_4	16.043	1.5 to 2.5 ppm
Carbon monoxide	CO	28.010	0.061 to 1.1 ppm
Sulphur dioxide	SO_2	64.06	1.1 ppm
Nitrous oxide	N_2O	44.012	0.5 ppm
Ozone	O_3	47.998	0.011 to 0.11
Nitrogen dioxide	NO_2	46.005	0.005 to 0.02 ppm
Radon	Rn	222	Trace
Nitric oxide	NO	30.006	Trace

Openshaw, D. and Cain, S., "Ultra-pure Cryogenic Nitrogen Generator", TCE, The Chemical Engineer, The Institution of Chemical Engineers, Rugby, England, UK., November 2002, p. 30.

FIG. 1-10

Greek Alphabet

α A=Alpha
β B=Beta
γ Γ=Gamma
δ Δ=Delta
ε E=Epsilon
ζ Z=Zeta
η H=Eta
θ Θ=Theta
ι I=Iota
κ K=Kappa
λ Λ-Lambda
μM=Mu
ν N=Nu
ξ Ξ=Xi
ο O=Omicron
π Π=Pi
ρ P=Rho
σ Σ=Sigma
τ T=Tau
υ Y=Upsilon
φ Φ=Phi
χ X=Chi
ψ Ψ=Psi
ω Ω=Omega

GPA Publications*

TECHNICAL STANDARDS MANUAL — A one-volume loose-leaf manual that contains the official test methods and specifications of the GPA. Included are GPA Standards 101-43, 2140, 2142, 2145, 2165, 2166, 2172, 2174, 2177, 2186, 2187, 2188, 2194, 2261, 2265, 2286, 2377, 3132, 8173, 8182, 8186, 8195, RB-181, RB-194 and ASTM Test Procedures D86, D130, D156, D216, D287, D323, D1070, D1265, D1267, D1657, D1837, D1838, D2158, D2163, D2713, D2784. Subject tabbed for ready reference.

PLANT OPERATIONS TEST MANUAL — A one-volume loose leaf manual containing the significant tests commonly used in the operation of a plant. This convenient compilation contains test methods which originated with ASTM, API, PEA, GPA, U.S. Bureau of Mines, Betz Laboratories, Girdler Corp. and Fluor Corporation. In addition, it contains all of the information in the "Technical Standards Manual."

CORROSION DETECTION REPORT — A practical and convenient field guide to detecting, locating, and measuring common corrosion problems in gas processing plants and related equipment.

PLANT PROJECT AND DESIGN CHECK LIST — Prepared by Technical Section A to serve as a guide in planning and preparing job and equipment specifications using categories normally required for a processing plant.

ENERGY CONSERVATION CHECK LIST — Prepared by Technical Section A, and patterned after the earlier "Plant Project and Design Check List", it was developed to serve as a guide check list for energy conservation within various units of equipment.

SAFETY INSPECTION CHECK LIST — Prepared by the Safety Committee to show the plant and design engineer items of importance to check from the viewpoint of safety in design and operation. It consists of approximately 60 pages covering 15 areas in the gas processing plant.

GUIDE FOR PERFORMANCE TESTING OF PLANT EQUIPMENT — Prepared by Section A as a guide for checking the performance of various items of equipment within a plant. Over 200 pages divided into five major sections: A. Plant Acceptance and Performance Tests; B. Towers and Vessels; C. Engines and Turbines; D. Compressors, Pumps and Blowers; and E. Heating and Cooling.

BIBLIOGRAPHY ON HYDROCARBONS — A comprehensive bibliography of important articles on hydrocarbons and associated compounds. Over 100 pages with 1300 abstracts, cloth bound, 9 x 12 inches. The text material covers the period from 1946-1960 inclusive. It contains a wealth of time-saving references for petroleum engineers, chemists, researchers, and students. J. A. Muckleroy.

NORTH AMERICAN STORAGE CAPACITY FOR LIGHT HYDROCARBONS AND U.S. LP-GAS IMPORT TERMINALS — A biennial report compiling the storage facilities for light hydrocarbons in the U.S. and the terminal facilities in the U.S. capable of receiving imported LP-gas. Excel Diskette available.

SALES OF NATURAL GAS LIQUIDS AND LIQUEFIED REFINERY GASES — A joint publication of API, GPA, PERC, and NPGA summarizes annual survey data on gas liquids sales — by product, by major market uses, and by state.

NGL SUPPLY/DEMAND/INVENTORY DATA — A compilation of historical gas plant and refinery production of gas liquids production, by month and by product. Data are extended to include total monthly supply, demand and inventories of individual products. Also available on LOTUS 123 diskette. Current monthly summaries of these data are available on request.

LP-GAS ODORIZATION SYMPOSIA PROCEEDINGS — Collection of papers presented at two symposia on LP-gas Odorization Technology in 1989 and 1990. Co-sponsored by the National Propane Gas Association and the Propane Gas Association of Canada, these proceedings are a compilation of information on LP-gas odorants, odorization practices and equipment, and original research into the behavior of odorants in the LP-gas fuel system.

REPORT OF INVESTIGATIONS–ODORIZATION OF LP-GAS — A summary of research findings and studies conducted during 1986-1990 by a joint task force of representatives from GPA, the National Propane Gas Association and the Propane Gas Association of Canada. Includes task force recommendations for effective odorization of LP-gas.

ANNUAL CONVENTION PROCEEDINGS — Collection of all technical papers presented in the technical forums and general sessions of the GPA annual conventions.

Standards and Bulletins

Specifications

GPA Standard 2140 — Liquefied Petroleum Gas Specifications and Test Methods.

GPA Standard 3132 — Natural Gasoline Specifications and Test Methods.

Analytical Methods

AGA-GPA CODE 101 — Standard Compression and Charcoal Tests for Determining the Natural Gasoline Content of Natural Gas.

GPA 2100 — Tentative Method for the Qualitative Determination of COS in Propane.

GPA Standard 2165 — Standard for Analysis of Natural Gas Liquid Mixtures by Gas Chromatography.

GPA Standard 2177 — Analysis of Demethanized Hydrocarbon Liquid Mixtures Containing Nitrogen and Carbon Dioxide by Gas Chromatography.

GPA Standard 2186 — Tentative Method for the Extended Analysis of Hydrocarbon Liquid Mixtures Containing Nitrogen and Carbon Dioxide by Temperature Programmed Gas Chromatography.

GPA Standard 2187 — Tentative Method for the Determination of Ammonia in Liquid Propane.

GPA Standard 2l88 — Tentative Method for the Determination of Ethyl Mercaptan in LP-gas Using Length of Stain Tubes.

GPA Standard 2194 — Tentative Low Pressure Field Method for Determining Ethyl Mercaptan Odorant in LP-gas Using Length of Stain Tubes.

GPA Standard 2198 — Selection, Preparation, Validation, Care, and Storage of Natural Gas and Natural Gas Liquid Reference Standard Blends.

GPA Standard 2261 — Analysis for Natural Gas and Similar Gaseous Mixtures by Gas Chromatography.

GPA Standard 2265 — GPA Standard for Determination of Hydrogen Sulfide and Mercaptan Sulfur in Natural Gas (Cadmium Sulfate-Iodometric Titration Method).

GPA Standard 2286 — Tentative Method of Extended Analysis for Natural Gas and Similar Gaseous Mixtures by Temperature Programmed Gas Chromatography.

GPA Standard 2290 — Tentative Method for the Determination of Carbonyl Sulfide (COS) in Unodorized Liquid Propane.

GPA Standard 2377 — Test for Hydrogen Sulfide and Carbon Dioxide in Natural Gas Using Length of Stain Tubes.

Measurement Standards

GPA Standard 2142 — Standard Factors for Volume Correction and Specific Gravity Conversion of Liquefied Petroleum Gases.

GPA Standard 2145 — Physical Constants for Paraffin Hydrocarbons and Other Components of Natural Gas. Data are given in both English and SI Units.

GPA Standard 2172 — Calculation of Gross Heating Value, Relative Density and Compressibility of Natural Gas Mixtures from Compositional Analysis.

GPA Standard 8173 — Method for Converting Mass of Natural Gas Liquids and Vapors to Equivalent Liquid Volumes. Data are given in both English and SI Units.

GPA Standard 8182 — Tentative Standard for the Mass Measurement of Natural Gas Liquids.

GPA Standard 8186 — Measurement of Liquid Hydrocarbon by Truck Scales.

GPA Standard 8195 — Tentative Standard for Converting Net Vapor Space Volumes to Equivalent Liquid Volumes.

GPA Reference Bulletin 181 — Heating Value as a Basis for Custody Transfer of Natural Gas. A reference to provide authoritative interpretation of accepted procedures for determining heating values.

GPA Reference Bulletin 194 — Tentative NGL Loading Practices.

Sampling Methods

GPA Standard 2166 — Obtaining Natural Gas Samples for Analysis by Gas Chromatography.

GPA Standard 2174 — Method for Obtaining Liquid Hydrocarbon Samples Using A Floating Piston Cylinder.

Miscellaneous Standards

GPA Publication 1167 — GPA Glossary-Definition of Words and Terms Used in the Gas Processing Industry.

---

* *GPA Committees periodically update or revise GPA publications. The last two digits of the year in which the publication is revised are appended to the publication number, e.g., GPA 2145-02.*

GPA Research Reports

Results of most of the GPA sponsored research projects since 1971 have been published as numbered Research Reports. In some cases, individual company sponsored data have been published as Technical Publications.

RR-1 *Bibliography of Data Sources for Low-Temperature Vapor-Liquid Equilibria in Non-Absorber Oil Systems* — R. D. Gunn and S. V. Mainkar, University of Texas, Austin, Texas. Project 692-A.

RR-2 *K-Values in Highly Aromatic and Highly Naphthenic Real Oil Absorber Systems* - Grant Wilson and Sherman T. Barton, P-V-T, Inc., Houston, Texas. Project 691.

RR-3 *Enthalpy and Entropy of Non-Polar Liquids at Low Temperatures* - K. C. Chao and R. A. Greenkorn, Purdue University, Lafayette, Indiana.

RR-4 *Evaluation of Eight Enthalpy Correlations* - Kenneth E. Starling, David W. Johnson and Philip C. Colver, University of Oklahoma, Norman, Oklahoma. Project 68l.

RR-5 *Experimental Measurements of Vapor-Liquid Equilibrium Data for the Ethane-Carbon Dioxide and Nitrogen-n-Pentane Binary Systems* - Kurata-Swift Consulting Engineers, Lawrence, Kansas. Project 692-B.

RR-6 *Enthalpies of Methane-C_7 Systems* - Bert Eakin, Grant M. Wilson and Will E. DeVaney, P-V-T, Inc., Houston, Texas. Project 661.

RR-7 *The Equilibrium Phase Properties of the Binary Systems: Nitrogen-Hydrogen Sulfide, Isobutane-Hydrogen Sulfide, Isobutane-Carbon Dioxide and Isobutane-Ethane* - D. B. Robinson and G. J. Besserer, University of Alberta, Edmonton, Alberta.

RR-8 *1971-1972 Enthalpy Correlation Evaluation Study* - Kenneth E. Starling, University of Oklahoma, Norman, Oklahoma. Project 713.

RR-9 *Enthalpies of Hydrogen Sulfide-Methane-Ethane Systems* - Bert Eakin and Will E. DeVaney, P-V-T, Inc., Houston, Texas. Project 722.

RR-10 *Solubility of Solid Carbon Dioxide in Pure Light Hydrocarbons and Mixtures of Light Hydrocarbons* - Fred Kurata, Center for Research, Inc., Lawrence, Kansas.

RR-11 *GPA Experimental Enthalpy Values Referred to Two Base Levels* - John M. Lenoir and Gene A. Cochran, University of Southern California, Los Angeles, California. Project 733.

RR-12 *Enthalpy and Phase Boundary Measurements on Carbon Dioxide and Mixtures of Carbon Dioxide with Methane, Ethane and Hydrogen Sulfide* - Grant M. Wilson and James M. Peterson, Brigham Young University, Provo, Utah. Project 731.

RR-13 *Prediction of Absorber Oil K-Values and Enthalpies* - John H. Erbar, Oklahoma State University, Stillwater, Oklahoma. Project 714.

RR-14 *Solubility of Heavier Hydrocarbons in Liquid Methane* - Fred Kurata, Center For Research, Inc., Lawrence, Kansas. Project 738-A.

RR-15 *The Equilibrium Phase Properties of Selected Binary Systems at Low Temperature: Nitrogen-Hydrogen Sulfide, Ethane-Hydrogen Sulfide and n-Butane-Carbon Dioxide* - D. B. Robinson and H. Kalra, University of Alberta, Edmonton, Alberta. Project 738.

RR-16 *Solubility Limits of Heavy Hydrocarbons in NGL and LNG Mixtures* - Will DeVaney, Bert Eakin and James M. Berryman, P-V-T, Inc., Houston, Texas. Project 735-A.

RR-17 *Smoothed Experimental Enthalpy Data for Three Methane-Ethane Binaries and a Methane-Ethane-Propane Ternary* - John E. Powers, Andre W. Furtado, Ravi Kant and Adriana Kwan, University of Michigan, Ann Arbor, Michigan. Project 723.

RR-18 *The Equilibrium Phase Properties of Selected Binary Systems: n-Heptane-Hydrogen Sulfide, n-Heptane-Carbon Dioxide and i-Butane-Nitrogen* - D. B. Robinson and H. Kalra, University of Alberta, Edmonton, Alberta. Project 745.

RR-19 *Vapor Phase Data for the Binary Systems of Methane with n-Butane, n-Pentane, n-Hexane and n-Heptane* - Roger J. J. Chen, Patsy S. Chappelear and Riki Kobayashi, Rice University, Houston, Texas. Project 692-B.

RR-20 *K-Values for the Methane-n-Butane, Methane-n-Pentane and Methane-n-Hexane Systems* - Doug Elliot, Y. N. Lin, T. C. Chu, Patsy S. Chappelear and Riki Kobayashi, Rice University, Houston, Texas. Project 692-B.

RR-21 *Dew-Point Values for the Methane-Carbon Dioxide System* - S. C. Hwang, Ho-Mu Lin, Patsy S. Chappelear and Riki Kobayashi, Rice University, Houston, Texas. Project 739.

RR-22 *Solubility of Hydrocarbons in Cryogenic LNG and NGL Mixtures* - James P. Kohn and Kraemer D. Luks, University of Notre Dame, Notre Dame, Indiana. Project 735.

RR-23 *Measurement of Ethane and Propane Recovery and Total Fraction Condensed for Simulated Natural Gas Mixtures* - Grant M. Wilson, John R. Cunningham, B. Steve Lofgren and Veldon E. Messick, Thermochemical Institute, Brigham Young University, Provo, Utah. Project 737.

RR-24 *Enthalpy and Phase Boundary Measurements on Mixtures of Nitrogen with Methane, Carbon Dioxide and Hydrogen Sulfide* - Grant M. Wilson, John R. Cunningham and Paul F. Nielsen, Brigham Young University, Provo, Utah. Project 741.

RR-25 *The Vapor-Liquid Equilibrium of the CH_4-CO_2 System at Low Temperatures* - S. C. Mraw, S. C. Hwang and Riki Kobayashi, Rice University, Houston, Texas. Project 739.

RR-26 *Statistical Thermodynamics of Solutions in Natural Gas and Petroleum Refining* - M. D. Donohue and J. M. Prausnitz, University of California, Berkeley, California. Project 721.

RR-27 *Solubility of Hydrocarbons in Cryogenic LNG and NGL Mixtures* - James P. Kohn and Kraemer D. Luks, University of Notre Dame, Notre Dame, Indiana. Project 735-A.

RR-28 *The Characterization of the Heptanes and Heavier Fractions for the GPA Peng-Robinson Programs* - D. B. Robinson and D. Y. Peng, University of Alberta, Edmonton, Alberta. Project 756.

RR-29 *The Equilibrium Phase Compositions of Selected Aromatic and Naphthenic Binary Systems: Toluene-Carbon Dioxide, Toluene-Hydrogen Sulfide, Methylcyclohexane-Carbon Dioxide and Methylcyclohexane-Hydrogen Sulfide* - D. B. Robinson and H-J Ng, University of Alberta, Edmonton, Alberta. Project 755, 755-A and 757-B.

RR-30 *High Temperature V-L-E Measurements for Substitute Gas Components* - Will DeVaney, James M. Berryman, Pen-Li Kao and Bert Eakin, P-V-T, Inc., Houston, Texas. Project 757.

RR-31 *The Equilibrium Phase Properties of a Synthetic Sour Gas Mixture and a Simulated Natural Gas Mixture* - D. B. Robinson, H. Kalra and Hans Rempis, University of Alberta, Edmonton, Alberta. Project 737-A & 737-B.

RR-32 *Vapor-Liquid Compositions of Propane-Butane Mixtures in Cold Weather Field Tests* - Thomas H. May and Dorab N. Baria, University of North Dakota, Grand Forks, North Dakota. Project 789-A.

RR-33 *Solubility of Hydrocarbons in Cryogenic LNG and NGL Mixtures* - James P. Kohn and Kraemer D. Luks, University of Notre Dame, Notre Dame, Indiana. Project 735.

RR-34 *Sour Water Equilibria: Ammonia Volatility Down to ppm; Effect of Electrolytes on Ammonia Volatility; pH vs. Composition* - Grant Wilson, Richard S. Owens and Marshall W. Roe, Wilco Research, Provo, Utah. Project 758-A.

RR-35 *Computer Simulations of Vapor-Liquid Compositions of Propane-Butane Mixtures in Cold Weather Field Tests* - Thomas H. May and Dorab N. Baria, University of North Dakota, Grand Forks, North Dakota. Project 789-B.

RR-36 *Literature Survey for Synthetic Gas Components--Thermodynamic Properties* - P. Pendergraft, M. Marston, M. Gonzales, V. Rice and J. Erbar, Oklahoma State University, Stillwater, Oklahoma. Project 746.

RR-37 *Enthalpy Measurements on Synthetic Gas Systems: Hydrogen-Methane, Hydrogen-Carbon Monoxide* - James M. Berryman, Will E. DeVaney, Bert E. Eakin and Nancy L. Bailey, P-V-T, Inc., Houston, Texas. Project 742.

RR-38 *A Preliminary Version of the PHC Equation of State Computerized for Engineering Calculations* - E. C. Hohmann, California State Polytechnic University, Pomona, California. Project 771.

RR-39 *The Equilibrium Phase Properties of Selected m-Xylene and Mesitylene Binary Systems: CH_2-m-Xylene, CO_2-m-Xylene, CH_4-Mesitylene* - D. B. Robinson, H-J Ng and S-S Huang, University of Alberta, Edmonton, Alberta. Project 755-B.

RR-40 *Measurement of Ethane and Propane Recovery and Total Fraction Condensed in the Bubble Point Region of Two Simulated Natural Gas Mixtures* - John R. Cunningham, John L. Oscarson and Mark L. Jenson, Brigham Young University, Provo, Utah. Project 737.

RR-40A *Phase Equilibria of a High Nitrogen Content Synthetic Natural Gas* - James P. Kohn and Robert C. Merrill, University of Notre Dame, Notre Dame, Indiana. Project 795.

RR-4l *Vapor-Liquid Equilibrium Data on Water-Substitute Gas Components: N2-H_2O, H_2-H_2O, CO-H_2O and H_2-CO-H_2O and H_2S-H_2O* - Paul C. Gillespie and Grant Wilson, Wilco Research Co., Provo, Utah. Project 758-B.

RR-42 *Predicting Synthetic Gas and Natural Gas Thermodynamic Properties Using a Modified Soave Redlich Kwong Equation of State* - J. H. Erbar, A. K. Jagota, S. Muthswamy and M. Moshfeghian, Oklahoma State University, Stillwater, Oklahoma. Project 752.

RR-43 *The Equilibrium Phase Properties of Selected m-Xylene and Mesitylene Binary Systems: m-Xylene-Mesitylene-H_2S, Mesitylene-CO_2* - D. B. Robinson and S-S Huang, University of Alberta, Edmonton, Alberta. Project 755-B.

RR-44 *Vapor-Liquid and Liquid-Liquid Equilibria in the Methane-Toluene System and Relation of Liquid-Liquid Equilibrium Behavior at Low Temperatures to Vapor-Liquid Equilibria Behavior at High Temperatures and Elevated Pressures* - Yeuh-Neu Lin, Shuen-Cheng Swang and Riki Kobayashi, Rice University, Houston, Scott W. Hopke, Exxon Production Company, Houston, Texas. Project 757.

RR-45 *The Water Content and Correlation of the Water Content of Methane in Equilibrium with Hydrates, (I); and the Water Content of a High Carbon Dioxide Simulated Prudhoe Bay Gas in Equilibrium with Hydrates, (II)* - Keichi Aoyagi, Kyoo Y. Song and Riki Kobayashi, Rice University, Houston, Texas, E. Dendy Sloan and P. B. Dharmawardhana, Dept. of Chemical Engineering, Colorado School of Mines, Golden, Colorado. Project 775.

RR-46 *Vapor Liquid Equilibrium Study of the H_2-CH_4 System at Low Temperatures and Elevated Pressures* - Joint research report for GPA and Gas Research Institute. Jane Huey Hong and Riki Kobayashi, Rice University, Houston, Texas. Project 757.

RR-47 *Behavior of CH_4-CO_2-H_2S Mixtures at Sub-Ambient Temperatures* - Joint research report for GPA and Canadian Gas Processors Association. D. B. Robinson, H-J. Ng and A. D. Leu, University of Alberta, Edmonton, Alberta. Project 738-A.

RR-48 *Vapor-Liquid and Liquid-Liquid Equilibria: Water-Methane; Water-Carbon Dioxide; Water-Hydrogen Sulfide; Water-nPentane; Water-Methane-*

nPentane - Paul Gillespie and Grant Wilson, Wiltec Research Company, Provo, Utah. Project 758-B.

RR-49 *Liquid-Liquid-Vapor Equilibria in Cryogenic LNG Mixtures* - James P. Kohn, University of Notre Dame, Notre Dame, Indiana and Kraemer Luks, University of Tulsa, Tulsa, Oklahoma. Project 795.

RR-49A *Liquid-Liquid-Vapor Equilibria in Cryogenic LNG Mixtures (raw data).* James P. Kohn, University of Notre Dame, Notre Dame, Indiana and Kraemer D. Luks, University of Tulsa, Tulsa, Oklahoma. Project 795.

RR-50 *Measurement and Interpretation of the Water Content of a Methane-Propane (5.31 mol %) Mixture in the Gaseous State in Equilibrium with Hydrate* - Hyoo Y. Song and Riki Kobayashi, Rice University, Houston, Texas. Project 775.

RR-5l *The Equilibrium Phase Properties of Selected Naphthenic Binary Systems: Methylcyclohexane-Nitrogen, Ethylcyclohexane-Hydrogen Sulfide and n-Propylcyclohexane-Hydrogen Sulfide* - D. B. Robinson, S-S Huang and A. D. Leu, University of Alberta, Edmonton, Alberta. Project 755-B.

RR-52 *Vapor-Liquid Equilibria for Sour Water Systems with Inert Gases Present* - Jonathan L. Owens, John R. Cunningham and Grant Wilson, Wiltec Research Co., Provo, Utah. Project 805.

RR-53 *Experimental Densities and Enthalpies for Water-Natural Gas Systems* - John J. Scheloske, Kenneth R. Hall, Philip T. Eubank and James C. Holste, Texas A & M University, College Station, Texas. Project 772.

RR-53A *Thermophysical Properties Tables for Wet, Sweet and Sour Natural Gases: Data Supplement to RR-53* - John J. Scheloske, Kenneth R. Hall, Philip T. Eubank and James C. Holste, Texas A & M University, College Station, Texas. Project 772.

RR-54 *The Equilibrium Phase Behavior of Several Solute Gases in the Solvent Phenanthrene* - Robert L. Robinson, Jr., Philip J. Carlberg, John J. Heidman and Yick-Kwan Chen, Oklahoma State University, Stillwater, Oklahoma. Project 757-A.

RR-55 *Phase Equilibrium Studies for Methane/Synthesis Gas Separation: The Hydrogen-Carbon Monoxide-Methane System* - Joint research report for GPA and Gas Research Institute. Jane Huey Hong and Riki Kobayashi, Rice University, Houston, Texas. Project 757.

RR-56 *Measurement of Total Fraction Condensed and Phase Boundary for a Simulated Natural Gas* - Joint research report for GPA and Gas Research Institute. John L. Oscarson and Bert Saxey, Brigham Young University, Provo, Utah. Project 737.

RR-57 *The Phase Behavior of Two Mixtures of Methane, Carbon Dioxide, Hydrogen Sulfide and Water* - D. B. Robinson, S-S Huang, A. D. Leu and H-J Ng, University of Alberta, Edmonton, Alberta. Project 758-A.

RR-58 *The Equilibrium Phase Properties of Selected Naphthenic Binary Systems: Ethylcyclohexane-Carbon Dioxide, Ethylcyclohexane-Nitrogen and Ethylcyclohexane-Methane* - D. B. Robinson, C-J Chen and H-J Ng, University of Alberta, Edmonton, Alberta. Project 755-B.

RR-59 *Vapor-Liquid Equilibrium Measurements on the Systems N_2-Toluene, N_2-m-Xylene, and N_2-Mesitylene* - S. Laugier, D. Legret, J. Desteve, D. Richon and H. Renon, A.R.M.I.N.E.S., Paris, France. Project 755-C.

RR-60 *Liquid-Liquid-Vapor Equilibria in Cryogenic LNG Mixtures: Phase II* - James P. Kohn and Robert C. Merrill, University of Notre Dame, Notre Dame, Indiana and Kraemer D. Luks, University of Tulsa, Tulsa, Oklahoma. Project 795.

RR-6l *An Evaluation of the GPSA Engineering Data Book Volume Correction Factor Table for Light Ends* - David B. Manley, University of Missouri, Rolla, Missouri. Project 819.

RR-62 *Water-Hydrocarbon Liquid-Liquid-Vapor Equilibrium Measurements to 530 degrees F* - Joint research report for GPA and American Petroleum Institute. C. Jeffrey Brady, John R. Cunningham and Grant Wilson, Wiltec Research Co., Provo, Utah.

RR-63 *Experimental Enthalpies for Pure Toluene and Pure Methylcyclohexane* - Luis E. Cediel, Philip T. Eubank, James C. Holste and Kenneth R. Hall, Texas A & M University, College Station, Texas. Project 792-82.

RR-64C *GPA Data Bank of Selected Enthalpy and Equilibria Values*- Thomas E. Daubert, Pennsylvania State University, University Park, Pennsylvania. Projects 806 & 822.

RR-65 *Vapor-Liquid Equilibria for Sour Water Systems at High Temperatures* - Jonathan L. Owens, John R. Cunningham and Grant M. Wilson, Wiltec Research Co., Provo, Utah. Project 805-82.

RR-66 *Equilibrium Phase Composition and Hydrating Conditions in Systems Containing Methanol, Light Hydrocarbons, Carbon Dioxide and Hydrogen Sulfide* - Joint research report for GPA and Canadian Gas Processors Association. H-J. Ng and D. B. Robinson, D. B. Robinson & Assoc., Ltd., and University of Alberta, Edmonton, Alberta. Project 825-82.

RR-67 *Liquid-Liquid-Vapor Equilibria in Cryogenic LNG Mixtures: Phase III-Nitrogen Rich Systems* - James P. Kohn and Robert C. Merrill, Jr., University of Notre Dame, Notre Dame, Indiana and Kraemer D. Luks, University of Tulsa, Tulsa, Oklahoma. Project 795-82.

RR-68 *Excess Enthalpy Experimental Data-Binary Systems: Water + n-Pentane, Water + n-Hexane, Water + n-Heptane, Water + n-Octane* - C. J. Wormald, C. N. Colling, N. M. Lancaster and A. J. Sellers, University of Bristol, Bristol, England. Project 773-A-79.

RR-69 *Evaluation of GPA*SIM Computer Program with GPA Data Bank of Selected Enthalpy Values* - Thomas E. Daubert, Pennsylvania State University, University Park, Pennsylvania. Project 822-82.

RR-70 *Phase Equilibrium Studies for Processing of Gas From CO_2 EOR Projects* - Project supported jointly by the Gas Processors Association and special industry contributions. Jane Huey Hong and Riki Kobayashi, Rice University, Houston, Texas. Project 826-82.

RR-71 *Water Content of NGL in Presence of Hydrates* - Kevin A. Sparks and E. Dendy Sloan, Colorado School of Mines, Golden, Colorado. Project 775-B-82.

RR-72 *Measurement of Ethane and Propane Recovery and Total Fraction Condensed for a Simulated Natural Gas in the Retrograde Region* - John L. Oscarson, Brigham Young University, Provo, Utah. Project 8l5-81.

RR-73 *Heats of Mixing of Steam with N_2, CO_2, H_2, CH_4, and CO at High Temperatures and Pressures Using a New High Temperature Calorimeter* - Grant M. Wilson and C. Jeff Brady, Wiltec Research Co., Provo, Utah. Project 773-79 & 80.

RR-74 *The Influence of Methanol on Hydrate Formation at Low Temperatures* - H-J. Ng and D. B. Robinson, D. B. Robinson & Assoc., Ltd., Edmonton, Alberta. Project 825-83.

RR-75 *Vapor-Liquid Equilibria Measurements on the Systems N_2-n-Propylcyclohexane, CO_2-n-Propylcyclohexane, CH_4-n-Propylcyclohexane, CH_4-n-Propylbenzene and CO_2-n-Propylbenzene* - S. Laugier, P. Alali, A. Valtz, A. Chareton, F. Fontalba, D. Richon and H. Renon, A.R.M.I.N.E.S., Paris, France. Project 755-C-82.

RR-76 *Phase Equilibrium Studies for Processing of Gas from CO_2 EOR Projects-Phase II* - Project supported jointly by the Gas Processors Association and special industry contributions. Jane Huey Hong and Riki Kobayashi, Rice University, Houston, Texas. Project 826-83.

RR-77 *Evaluation of GPA*SIM Computer Program with GPA Data Bank of Selected V-L-E Data* - Thomas E. Daubert, Pennsylvania State University, University Park, Pennsylvania. Project 806-83.

RR-78 *Sulfur Compounds and Water V-L-E and Mutual Solubility MESH-H_2O; ETSH-H_2O; CS_2-H_2O; and COS-H_2O* - Paul C. Gillespie and Grant M. Wilson, Wiltec Research Co., Provo, Utah. Project 758-80.

RR-79 *Liquid-Liquid-Vapor Equilibria in Cryogenic LNG Mixtures (Phase IV - Nitrogen-Rich Systems)* - James P. Kohn and Feliciano M. Llave, University of Notre Dame, Notre Dame, Indiana and Kraemer D. Luks, University of Tulsa, Tulsa, Oklahoma. Project 795-83.

RR-80 *The Water Content of CO_2-Rich Fluids in Equilibrium with Liquid Water or Hydrate* - Kyoo Y. Song and Riki Kobayashi, Rice University, Houston, Texas. Project 775-83.

RR-81 *Evaluation of Peng-Robinson Computer Program with GPA Data Bank of Selected Enthalpy Values* - Thomas E. Daubert, Pennsylvania State University, University Park, Pennsylvania. Project 822-83.

RR-82 *Vapor-Liquid Equilibria Measurements on the Systems Ethane-Toluene, Ethane-n-Propylbenzene, Ethane-Metaxylene, Ethane-Mesitylene, Ethane-Methylcyclohexane* - S. Laugier, A. Valtz, A. Chareton, D. Richon and H. Renon, A.R.M.I.N.E.S., Paris, France. Project 755-C-83.

RR-83 *Excess Enthalpy Experimental Data Binary Systems: Water-Carbon Monoxide, Water-Carbon Dioxide* - C. J. Wormald, N. M. Lancaster, A. J. Sellars, University of Bristol, Bristol, England. Project 773-A-81.

RR-84 *Evaluation of Equi-Phase (Peng-Robinson) Computer Program with GPA Data Bank of Selected V-L-E Data* - Thomas E. Daubert, Pennsylvania State University, University Park, Pennsylvania. Project 806-84.

RR-85 *Enthalpies of Solutions of CO_2 in Aqueous Diglycolamine Solutions* - Scott P. Christensen, James J. Christensen and Reed M. Izatt, Brigham Young University, Provo, Utah. Project 821-84.

RR-86 *Properties of CO_2-Rich Mixtures* - Joint research report for GPA and Gas Research Institute. K. R. Hall, J. C. Holste, P. T. Eubank and K. N. Marsh, Texas A & M University, College Station, Texas. Project 842-84.

RR-87 *Hydrate Formation and Equilibrium Phase Compositions in the Presence of Methanol: Selected Systems Containing Hydrogen Sulfide, Carbon Dioxide, Ethane or Methane* - H-J. Ng, C-J. Chen and D. B. Robinson, D. B. Robinson & Assoc., Ltd., Edmonton, Alberta. Project 825-84.

RR-88 *Vapor-Liquid Equilibria Measurements on the Systems Ethane-n-Propylcyclohexane, Propane-Cyclohexane, Propane-n-Propylcyclohexane, Propane-n-Propylbenzene and Propane-Mesitylene* - S. Laugier, A. Valtz, A. Chareton, D. Richon and H. Renon, A.R.M.I.N.E.S., Paris, France. Project 755-C-84.

RR-89 *Vapor-Liquid Equilibrium and Condensing Curves for a Typical Gas Condensate* - H-J Ng and D. B. Robinson, D. B. Robinson & Assoc., Ltd., Edmonton, Alberta. Project 815-82 & 83.

RR-90 *Vapor-Liquid Equilibrium Measurements on the Ammonia-Water System from 313K to 589K* - Joint research report for GPA and AIChE-DIPPR. C. Gillespie, W. Vincent Wilding and Grant M. Wilson, Wiltec Research Co., Provo, Utah. Project 758-B-81.

RR-91 *Liquid-Liquid-Vapor Equilibria in Cryogenic LNG Mixtures - Phase V* -James P. Kohn and F. M. Llave, University of Notre Dame, Notre Dame, Indiana and Kraemer D. Luks, University of Tulsa, Tulsa, Oklahoma. Project 795-85.

RR-92 *The Effect of Ethylene Glycol or Methanol on Hydrate Formation in Systems Containing Ethane, Propane, Carbon Dioxide, Hydrogen Sulfide or a Typical Gas Condensate* - H-J Ng, C. J. Chen and D. B. Robinson, D. B. Robinson & Assoc., Ltd., Edmonton, Alberta. Project 825-85.

RR-93 *Gas Solubilities and Vapor-Liquid Equilibrium Measurements of H_2, CO_2 and NH_3 in Water-Phenol Mixtures from 110 degrees F to 550 degrees F* - Paul C. Gillespie, Jonathan L. Owens and Grant M. Wilson, Wiltec Research Co., Provo, Utah. Project 758-B-81 & 82.

RR-94 *Phase Equilibrium Studies for Processing of Gas from CO_2 EOR Projects (Phase III): A. The Effect of Toluene as an Extractive Agent; B. The Effect of Methane on V-L-E Behavior in CO_2-Rich Gas n-Pentane Quasi-binary Mixtures* - Project supported jointly by GPA and special industry contributions. Jane Huey Hong and Riki Kobayashi, Rice University, Houston, Texas. Project 826-84 & 85.

RR-95 *Application of a High Pressure, Multiproperty Apparatus for the Measurement of Thermodynamic and Transport Properties to Measure the Phase and Volumetric Properties of a Supercritical Extractive System: The Carbon Dioxide-n-Hexadecane System* - Joint research report for Gas Processors Association and Gas Research Institute. T. Charoensombut-amon and Riki Kobayashi, Rice University, Houston, Texas. Project 826-85.

RR-96 *Vapor-Liquid Equilibrium and Condensing Curves in the Vicinity of the Critical Point for a Typical Gas Condensate* - H-J. Ng, C. J. Chen and D. B. Robinson, D. B. Robinson & Assoc., Ltd., Edmonton, Alberta. Project 815-A-84.

RR-97 *Excess Enthalpy Experimental Data Binary Systems: Water + Ethylene, Water + Ethane, Water + Propane, Water + n-Butane - Ternary System: Water + Methane + Carbon Dioxide* - C. J. Wormald and N. M. Lancaster, University of Bristol, Bristol, England. Project 773-B-82.

RR-98 *Glycol Vaporization Losses in Super-Critical CO_2* - Y. Adachi, Patrick Malone, Toshikuni Yonemoto and Riki Kobayashi, Rice University, Houston, Texas. Project 856-85.

RR-99 *The Water Content of CO_2-Rich Fluids in Equilibrium with Liquid Water and/or Hydrates* - Kyoo Y. Song and Riki Kobayashi, Rice University, Houston, Texas. Project 775-85.

RR-100 *Water Content of NGL in Presence of Hydrates* - Mark S. Bourrie and E. Dendy Sloan, Colorado School of Mines, Golden, Colorado. Project 775-A-83 & 84.

RR-101 *Vapor-Liquid Equilibria Measurements on the Systems Methane-Methylcyclohexane, Nitrogen-n-Propylbenzene, Hydrogen Sulfide-n-Propylbenzene, Propane-Toluene, Propane-m-Xylene and Propane-Methylcyclohexane* - A. Chareton, A. Valtz, C. Lafeuil, S. Laugier, D. Richon and H. Renon, A.R.M.I.N.E.S., Paris, France. Project 755-C-85.

RR-102 *Enthalpies of Solution of CO_2 in Aqueous Methyldiethanolamine Solutions* - Keith E. Merkley, James J. Christensen and Reed M. Izatt, Brigham Young University, Provo, Utah. Project 821.

RR-103 *Enthalpies and Phase Boundary Measurements: Equal Molar Mixtures of n-Pentane with Carbon Dioxide and Hydrogen Sulfide* - John R. Cunningham, Brigham Young University, Provo, Utah. Project 763.

RR-104 *Equilibrium Solubility of Carbon Dioxide or Hydrogen Sulfide in Aqueous Solutions of Monoethanolamine, Diglycolamine, Diethanolamine and Methyldiethanolamine* - R. N. Maddox, A. H. Bhairi, James R. Diers and P. A. Thomas, Oklahoma State University, Stillwater, Oklahoma. Project 841.

RR-105 *Vapor-Liquid Equilibrium and Condensing Curves for a Gas Condensate Containing Nitrogen* - H-J Ng, H. Schroeder and D. B. Robinson, D. B. Robinson & Assoc., Ltd., Edmonton, Alberta. Project 815-85 & 86.

RR-106 *The Influence of High Concentrations of Methanol on Hydrate Formation and the Distribution of Glycol in Liquid-Liquid Mixtures* - H-J Ng, C. J. Chen and D. B. Robinson, D. B. Robinson & Assoc., Ltd., Edmonton, Alberta. Project 825-86.

RR-107 *Thermodynamic Properties of Pure Hydrogen Sulfide and Mixtures Containing Hydrogen Sulfide with Methane, Carbon Dioxide, Methylcyclohexane and Toluene* - Donald M. Bailey, Chung Hsiu Liu, James C. Holste, Kenneth R. Hall, Philip T. Eubank and Kenneth M. Marsh, Texas A & M University, College Station, Texas. Project 792.

RR-108 *Enthalpies of Solution of CO_2 in Aqueous Diethanolamine Solutions* - Rebecca Helton, James J. Christensen and Reed M. Izatt, Brigham Young University, Provo, Utah. Project 821-86.

RR-109 *Acoustic Determination of the Thermodynamic Reference State Heat Capacity of n-Heptane Vapor* - Sam O. Colgate, A. Sivaraman and Kyle Reed, University of Florida, Gainesville, Florida. Project 831-83 through 86.

RR-110 *Thermophysical Properties for Special High CO_2 Content Mixtures* - James F. Ely, J. W. Magee and W. M. Haynes, National Bureau of Standards, Boulder, Colorado. Project 839-Part I.

RR-111 *Additional Evaluation of GPA*SIM Computer Program with GPA Data Bank of Selected VLE Data* - Thomas E. Daubert, Pennsylvania State University, University Park, Pennsylvania. Project 856.

RR-112 *Additional Evaluation of Equi-Phase (Peng Robinson) Computer Program with GPA Data Bank of Selected VLE Data* - Thomas E. Daubert, Pennsylvania State University, University Park, Pennsylvania. Project 806-86.

RR-113 *Vapor Liquid Equilibrium in Propane-Odorant Systems* - Heng-Joo Ng and Donald B. Robinson, DB Robinson & Associates, Ltd., Edmonton, Alberta. Project 876.

RR-114 *Enthalpies of Solution of H_2S in Aqueous Diethanolamine Solutions* - Rebecca Van Dam, James J. Christensen, Reed M. Izatt, and John L. Oscarson, Brigham Young University, Provo, Utah. Project 821.

RR-115 *Liquid-Liquid-Vapor Equilibria in Cryogenic LNG Mixtures - Phase VI* - W. L. Chen, James P. Kohn, University of Notre Dame, Notre Dame, Indiana and Kraemer D. Luks, University of Tulsa, Tulsa, Oklahoma. Project 795.

RR-116 *Vapor Liquid Equilibrium and Condensing Curves for a Highly Aromatic Gas Condensate* - H-J. Ng, H. Schroeder, C. J. Chen, and D. B. Robinson, DB Robinson & Associates, Edmonton, Alberta. Project 815.

RR-117 *The Solubility of Methanol or Glycol in Water-Hydrocarbon Systems* - C. J. Chen, H-J. Ng, and D. B. Robinson, DB Robinson & Associates, Edmonton, Alberta. Project 825.

RR-118 *GPSWAT: GPA Sour Water Equilibria Correlation and Computer Program* - Grant Wilson and Wayne W. Y. Eng, Wiltec Research Co., Provo, Utah. Project 758.

RR-119 *Triethylene Glycol Vaporization Losses In Supercritical CO_2* - T. Yonemoto, T. Charoensombut-Amon, and Riki Kobayashi, Rice University, Houston, Texas. Project 856.

RR-120 *Water Content Values of a CO_2 - 5.31 Mol Percent Methane Mixture* - Kyoo Y. Song and Riki Kobayashi, Rice University, Houston, Texas. Project 775.

RR-121 *Experimental Enthalpies of Pentanes-plus Fractions* - P. T. Eubank, K. R. Hall, J. C. Holste and M. G. Johnson, Texas A&M University, College Station, Texas. Project 811.

RR-122 *Thermodynamic Properties of Near-Equimolar Mixtures for CO_2-CH_4 and CO_2-N_2* - D. M. Bailey, G. J. Esper, J. C. Holste, K. R. Hall, P. T. Eubank, K. N. Marsh, W. J. Rogers, Texas A&M University, College Station, Texas. Project 842.

RR-123 *Reference State Heat Capacities of Three C_8 Compounds* - Sam Colgate, A. Sivaraman and K. Reed, University of Florida, Gainesville, Florida. Project 831.

RR-124 *Equilibrium Solubility of CO_2 or H_2S in Aqueous Solutions of DEA at Low Partial Pressures* - R. N. Maddox and E. M. Elizondo, Oklahoma State University, Stillwater, Oklahoma. Project 841.

RR-125 *Equilibrium Solubility of CO_2 or H_2S in Protonated Solutions of DEA* - R. N. Maddox, M. Abu-Arabi and E. M. Elizondo, Oklahoma State University, Stillwater, Oklahoma. Project 841.

RR-126 *Phase Behavior and Properties of an Aromatic Condensate Containing 20 Mole Percent Nitrogen* - H-J. Ng, H. Schroeder, D.B. Robinson, DB Robinson Research Ltd., Edmonton, Alberta. Project 815.

RR-127 *Enthalpies of Solution of H_2S in Aqueous Methyldiethanolamine Solutions* - J.L. Oscarson, R.M. Izatt, Brigham Young University, Provo, Untah. Project 821.

RR-128 *Enthalpies of Water + Methanol Mixtures between 180 and 320 K* - S. W. Cochran, J. C. Holste, K. N. Marsh, B. E. Gammon and K. R. Hall, Texas A&M University, College Station, Texas. Project 881.

RR-129 *Human Response Research Evaluation of Alternate Odorants for LP-GAS* - D.L. Ripley, J.W. Goetzinger, M.L. Whisman, NIPER, Bartlesville, Oklahoma. Project 898.

RR-130 *A Thermodynamically Consistent Model for the Prediction of Solubilities and Enthalpies of Solution of Acid Gases in Aqueous Aklanolamine Solutions* - John L. Oscarson, Xuemin Chen, Reed M. Izatt, Brigham Young University, Provo, Utah. Project 821.

RR-131 *The Solubility of Selected Aromatic Hydrocarbons in Triethylene Glycol* - H.-J. Ng, C.-J. Chen, D. B. Robinson, DB Robinson Research Ltd., Edmonton, Alberta. Project 895.

RR-132 *Water Content of Ethane, Propane, and Their Mixtures in Equilibrium with Liquid Water or Hydrates* - K. Y. Song, R. Kobayashi, Rice University, Houston, Texas. Project 875.

RR-133 *Volume Correction Factors for Natural Gas Liquids – Phase I* - J. F. Ely, National Institute of Standards and Technology, Boulder, Colorado. Project 899.

RR-134 *Evaluation of Four Methods for Predicting Hydrate Equilibria* - Thomas E. Daubert, Pennsylvania State University, University Park, Pennsylvania. Project 806.

RR-135 *Vapor Liquid Equilibria for Volatile-Sulfur-Containing Systems* - A. Valtz, J. Schwartzentruber, D. Richon, H. Renon, A.R.M.I.N.E.S., Paris (France). Project 876.

RR-136 *A Predictive Model for the Thermophysical Properties of Carbon Dioxide Rich Mixtures* - J.W. Magee, J.A. Howley, National Institute of Standards and Technology, Boulder, Colorado and J.F. Ely, Colorado School of Mines, Golden, Colorado. Project 839.

RR-137 *The Solubility of Selected Aromatic Hydrocarbons in Monoethylene Glycol* - H.J. Ng, C.J. Chen, D.B. Robinson, DB Robinson Research Ltd., Edmonton, Alberta. Project 895.

RR-138 *Thermodynamic Properties of CO2 + CH4 Mixtures* - C-A. Hwang, H. Duarte-Garza, P. T. Eubank, J. C. Holste, K. R. Hall, Texas A&M University; B. E. Gammon, and K. N. Marsh, Thermodynamics Research Center, College Station, Texas. Project 842.

RR-139 *Thermodynamic Properties of CO2 + C2H6 Mixtures* - C-A. Hwang, H. Duarte-Garza, P. T. Eubank, J. C. Holste, K. R. Hall, Texas A&M University; B. E. Gammon, and K. N. Marsh, Thermodynamics Research Center, College Station, Texas. Project 842.

RR-140 *Thermodynamic Properties of CO2 + N2 Mixtures* - C-A. Hwang, H. Duarte-Garza, P. T. Eubank, J. C. Holste, K. R. Hall, Texas A&M University; B. E. Gammon, and K. N. Marsh, Thermodynamics Research Center, College Station, Texas. Project 842.

RR-141 *Thermodynamic Properties of CO2 + H2S Mixtures* - S. J. Kellerman, C. E. Stouffer, P. T. Eubank, J. C. Holste, K. R. Hall, Texas A&M University; B. E. Gammon, and K. N. Marsh, Thermodynamics Research Center, College Station, Texas. Project 842.

RR-142 *Experimental Enthalpies of NitrogenRich Systems* - L. C. Wilson, W. V. Wilding, G. M. Wilson, Wiltec Research Company, Inc., Provo, Utah. Project 891.

RR-143 *A Study of Passivation Agents for Odorized Propane Containers* - W. Goetzinger, D. L. Ripley, Bartlesville, Oklahoma. Project 939.

RR-144 *Enthalpies of Mixing of Systems Containing Methane, Methanol and C7 Hydrocarbons* - J. Oscarson, J. Coxam, Sue Gillespie, Brigham Young University, Provo, Utah. Project 881.

RR-145 *Enthalpies of C7 + Methane + Methanol Mixtures Between 180 and 320 K.* - S. J. Kellerman, S. W. Cochran, J. C. Holste, and K. R. Hall, Texas A&M University; and B. E. Gammon and K. N. Marsh, Thermodynamic Research Center; College Station, Texas. Project 881.

RR-146 *Fluoride Contamination in LPGas* - J. W. Mausteller, MSA Research Corp., Pittsburgh, Pennsylvania. Project 919.

RR-147 *Density Measurements on Natural Gas Liquids* - C. D. Holcomb, J. W. Magee, W. M. Haynes, National Institute of Standards and Technology, Boulder, Colorado. Project 916.

RR-148 *Volume Correction Factors for Natural Gas Liquids Phase II* - James F. Ely, Colorado School of Mines, Golden, Colorado.

RR-149 *Vapour-Liquid and Vapour-Liquid-Liquid Equilibria for H2S, CO2, Selected Light Hydrocarbons and a Gas Condensate in Aqueous Methanol or Ethylene Glycol Solutions* - H.-J. Ng, C.-J. Chen, DB Robinson Research Ltd., Alberta, Canada. Project 905.

RR-150 *Mutual Solubility in Water-Hydrocarbon Systems* - H.-J. Ng, C.-J. Chen, DB Robinson Research Ltd., Alberta, Canada. Project 895.

RR-151 *Reaction Kinetics of CO2 with MEA, DEA, and MDEA-Based Blends* - Ralph H. Weiland, Optimized Gas Treating, Inc., Houston, Texas. Project 911.

RR-152 *Physical Properties of MEA, DEA, MDEA, and MDEA-Based Blends Loaded with CO2* - Ralph H. Weiland, Optimized Gas Treating, Inc., Houston, Texas. Project 911.

RR-153 *Enhancement Factors for Acid Gas Removal with Single and Mixed Amines* - Ralph H. Weiland, Optimized Gas Treating, Inc., Houston,Texas. Project 911.

RR-154 *Experimental Enthalpies of Light/Heavy Hydrocarbon Systems: Methane/n-Heptane, Methane/Methylcyclohexane, Methane/Toluene* - Loren C. Wilson and Grant M. Wilson, Wiltech Research Company, Inc., Provo, Utah. Project 901.

RR-155 *Solubility of H2S and CO2 in Alkanolamines* – S.H. Huang and H.-J. NG, DB Robinsons Research Ltd., Edmonton, Alberta, Canada. Project 911.

RR-156 *Hydrate Phase Equilibria in Inhibited and Brine Systems* - P. Raj Bishnoi, Pankaj D. Dholabhai, and Kal N. Mahadev, University of Calgary, Calgary, Alberta, Canada. Project 905-93(Sub-Project 2).

RR-157 *Acid Gas Treating with Aqueous Alkanolamines - Part I: A Mass Transfer Model for Predicting Rates of Absorption of Stripping of H2S and CO2 in MDEA, DEA, and Blends of DEA and MDEA* - Edward B. Rinker, Sami S. Ashour, and Orville C. Sandall, University of California, Santa Barbara, California. Project 911 - Part I.

RR-158 *Acid Gas Treating with Aqueous Alkanolamines - Part II: Physical Property Data Important in Modeling H2S and CO2 Absorption into Aqueous DEA, MDEA, and Blends of DEA and MDEA* - Edward B. Rinker, Sami S. Ashour, and Orville C. Sandall, University of California, Santa Barbara, California. Project 911 - Part II.

RR-159 *Acid Gas Treating with Aqueous Alkanolamines - Part III: Experimental Absorption Rate Measurements and Reaction Kinetics for H2S and CO2 in Aqueous DEA, MDEA, and Blends of DEA and MDEA* - Edward B. Rinker, Sami S. Ashour, and Orville C. Sandall, University of California, Santa Barbara, California. Project 911 - Part III.

RR-160 *Mutual Solubility in Gas Condensate - EG Solution Systems - H.-J. Ng and C.-J. Chen, DB Robinson Research L*td., Edmonton, Alberta, Canada. Project 895-2.

RR-161 *Kinetics of Gas Hydrates with and without Inhibitors* - Kyoo Y. Song, Guillaume Feneyrou, Raymond Martin, and Riki Kobayashi, Rice University, Houston, Texas. Project 905-95.

RR-162 *Vapor-Liquid Equilibria for Volatile-Sulfur-Containing Systems III. Butane-Sulfur Compounds Containing Systems IV. Hydrocarbon-Hydrocarbon-Sulfur Compounds Containing Systems V. Hydrocarbon(s)-Hydrogen Sulfide-Sulfur Compounds Containing Systems* – A. Valtz, P. Guilbot, D. Richon, ARMINES, Paris, France. Project 876.

RR-163 *Diffusion Coefficients in Aqueous Amines* – Richard Rowley, Brigham Young University, Provo, Utah. Project 911.

RR-164 *Phase Equilibria and Kinetics of Sulfur Species-Hydrocarbon-Aqueous Amine Systems* – Henj-Joo Ng, DB Robinson Research Ltd., Edmonton, Alberta, Canada, and F.-Y. Jou and A.E. Mather, University of Alberta, Edmonton, Alberta, Canada. Project 941.

RR-165 *The Collection of VLE Data for Acid Gas - Alkanolamine Systems Using Fourier Transform Infrared Spectroscopy* - Jerry A. Bullin, Richard R. Davison, and William J. Rogers, Texas A&M University, College Station, Texas. Project 911.

RR-167 *CO2 and H2S Thermodynamics and Kinetics in Aqueous Alkanolamines* - Gary Rochelle, Msafiri Mshewa, Mark Posey, Manuel Pacheco, and Shoich Kaganoi, The University of Texas at Austin, Austin, Texas. Project 911.

RR-168 *Hydrate Phase Composition for Multicomponent Gases* – Heng-Joo Ng, and Craig Borman, DB Robinson Research Ltd., Edmonton, Alberta, Canada. Project 976-1.

RR-169 *GPSA Engineering Data Book Revitalization and Maintenance – Water-Hydrocarbon Mutual Solubility Data* – Jan Wagner, Oklahoma State University, Stillwater, Oklahoma. Project 975.

RR-170 *Prediction of Sulfur Compound Distribution in Fractionators. Measurement of Phase Equilibrium Data, and Extension and Test of Applicability of the PSRK Group Contribution Method to LNG Related Systems: I - Experimental Part: Results for the Binary Systems Hydrogen Sulfide-Carbonyl Sulfide, Hydrogen Sulfide-Dimethyl Sulfide, Hydrogen Sulfide-Ethyl Methyl Sulfide, Methane-Methanethiol, and Methane-Ethanethio; II - Reevaluation of Distribution Coefficients of Sulfur Compounds Diluted in (C1 to C4)-Hydrocarbons and their Mixtures with*

Hydrogen Sulfide (experimental results from GPA Project 876) - P. Guilbot, P. Theveneau, A. Valtz, A. Baba-Ahmed, D. Richon, ARMINES, Paris, France; and K. Fischer, University of Oldengurg, Germany. Project 986.

RR-171 *Solids Deposition in Natural Gas Systems* - Amyn Teja, Vicky Smith, Tongfan Sun, and Janette Mendez-Santiago, Georgia Institute of Technology. Project 905-93.

RR-173 *GPA Thermodynamic Data Base* - Jan Wagner, Khaled Gasem, and Eric Maase, Oklahoma State University, Stillwater, Oklahoma. Projects 921/925.

RR-174 *Water Content of Natural Gas Systems Containing Acid Gas* - Heng-Joo Ng, C.-J. Chen, and Helmut Schroeder, DB Robinson Research Ltd., Edmonton, Alberta, Canada. Project 945.

RR-175 *COS Removal from Propane* - Bret Rhinesmith, P.J. Archer, S.J. Watson, Pearl Development Co., Bailey, CO. Project 991-1.

RR-176 *Removal of Propylene from Fuel Grade Propane / LPG* - Paul F. Bryan, Mount Vernon, Indiana. Project 008.

RR-177 *Vapor-Liquid Equilibrium Studies on Water-Methanol-TEG-Hydrocarbon Systems* - Heng-Joo Ng and Helmut Schroeder, DBR Research Inc., Edmonton, Alberta, Canada. Project 966.

RR-179 *Vapor-Liquid Equilibrium Measurements on Propane, n-Butane, Isobutane, Ethane, N-Pentane, and n-Hexane* - David M. Von Niederhausen and Neil F. Giles, Wiltec Research Company, Inc., Provo, Utah. Project 012.

RR-180 *Amine BTEX Solubility.*- A. Valtz, P. Guilbot, and D. Richon, ARMINES, Paris, France. Project 971.

RR-182 *Kinetics of Sulfur Species - Hydrocarbon - Aqueous Amine Systems* - Orville C. Sandall, University of California, Santa Barbara, CA. Project 962.

RR-183 *The Impact of Sulfur Species on Glycol Dehydration — A Study of the Solubility of Certain Gases and Gas Mixtures in Glycol Solutions at Elevated Pressures and Temperatures* - P. M. Davis, P. D. Clark, E. Fitzpatrick, K. L. Lesage, W. Y. Svrcek, M. Satyro; Alberta Sulfur Research Laboratory, Calgary, Alberta. Project 992-1.

GPA TECHNICAL PUBLICATIONS

TP-1 *Liquid Densities of Ethane, Propane and Ethane-Propane Mixtures* - J. R. Tomlinson, Gulf Research & Development Co., Pittsburgh, Pennsylvania.

TP-2 *Liquid Densities of High-Ethane Raw Make Streams* - T. K. Provence, Jr., Mobil Pipe Line Co., L. D. Wiener and D. K. Walton, Mobil Research & Development Corp., Dallas, Texas.

TP-3 *A Model for the Precise Calculation of Liquefied Natural Gas Densities* - M. A. Albright, Phillips Petroleum Co., Bartlesville, Oklahoma.

TP-4 *Low-Temperature Data from Rice University for Vapor-Liquid and P-V-T Behavior* - R. Kobayashi, P.S. Chappelear and T. W. Leland, Rice University, Houston, Texas.

TP-5 *Relation of Liquid-Liquid Equilibrium Behavior at Low Temperatures to Vapor-Liquid Equilibria Behavior at High Temperatures and Elevated Pressures* - S. C. Hwang, Y. Lin and R. Kobayashi, Rice University and S.W. Hopke, Exxon Production Research Co., Houston, Texas.

TP-6 *Experimentally Based Thermodynamic Properties of Propane* - V. L. Bhirud and J. E. Powers, University of Michigan, Ann Arbor, Michigan.

TP-7 *Excess Enthalpy Experimental Data, Binary Systems: Water-Hydrogen, Water-Methane, Water-Nitrogen, Water-Argon* - C. J. Wormald, C. N. Colling, University of Bristol, Bristol, England.

TP-8 *The Solubility of Carbon Dioxide in Propylene Carbonate at Elevated Pressures and Higher Than Ambient Temperatures* - P.D. Mantor, O.Abib, Jr., K.Y. Song and R. Kobayashi, Rice University, Houston, Texas.

TP-9 *The Water Content and the Solubility of CO_2 in Equilibrium with DEG-Water and TEG-Water Solutions at Feasible Absorption Conditions* - S. Takahashi and R. Kobayashi, Rice University, Houston, Texas.

TP-10 *Hydrate Decomposition Conditions in the System Hydrogen Sulfide, Methane and Propane* - J. P. Schroeter and R. Kobayashi, Rice University and H. A. Hildebrand, Exxon Production Research Co., Houston, Texas.

TP-11 *Vapor-Liquid-Equilibria Study of Light Gases in Hydrogen-Coal Liquid Model Compound Systems* - T. Kragas and R. Kobayashi, Rice University, Houston, Texas.

TP-12 *Liquid Densities of Ethane-Propane Mixtures* - W. R. Parrish, Phillips Petroleum Co., Bartlesville, Oklahoma.

TP-13 *Experimental Orifice Meter Studies* - R. G. Teyssandier, Z. D. Husian and M. F. Zendan, Daniel Industries, Inc., Houston, Texas.

TP-14 *Energy Functions for Gaseous CO_2-H_2O Mixtures* - M.R. Patel, J.C. Holste, K.R. Hall and P.T. Eubank, Texas A & M University, College Station, Texas.

TP-15 *A Simplified Vapor Pressure Correlation for Commercial NGL'S* - D. L. Embry, D. G. Glascock, and R. W. Hankinson, Phillips Petroleum Company, Bartlesville, Oklahoma.

TP-17 *Table of Physical Properties of Hydrocarbons for Extended Analysis of Natural Gases* - B. E. Gammon, Thermodynamic Research Center, Texas A & M University, College Station, Texas.

TP-18 *GPA Experimental Enthalpy Values Referred to Two Base Levels from Excess Enthalpy Data* - P.S. Chappelear, Houston, Texas.

TP-19 *Vapor-Solid Equilibrium Ratios for Structure I and Structure II Natural Gas Hydrates* - S.L. Mann, Mobil Oil Corp., L.M. McClure, Columbus Energy

Corp., E.D. Sloan and F.H. Poettmann, Colorado School of Mines.

TP-20 *Effect of Ammonia on LP-Gas Odorant* - J.W. Goetzinger and D.L. Ripley, National Institute for Petroleum Energy Research, Bartlesville, Oklahoma.

TP-21 *Trace Contaminants in Natural Gas Liquids* - GPA Technical Section C, Product Specifications, Tulsa, Oklahoma.

TP-22 *K-Value Charts, GPSA Engineering Data Book Revised 10th Edition*, Gas Processors Suppliers Association, Tulsa, Oklahoma.

TP-24 *Solubility and Vapor-Liquid Equilibrium Data for Systems Containing Diamondoids, Gas Mixtures, Feed Stock Oil, and Triethylene Glycol* - Heng-Joo Ng, DB Robinson Research Ltd., Edmonton, Alberta, Canada.

TP-25 *Temperature Correction for the Volume of Light Hydrocarbons, Tables 24E and 23E* - A joint publication of API, ASTM, and GPA.

TP-26 *Mutual Solubility in Water / Methanol / Hydrocarbon Solutions* - DB Robinson Research Ltd., Edmonton, Alberta, Canada and Norsk Hydro, Oslo, Norway.

TP-28 *Water content of CO_2-Rich Phase of Gaseous Mixtures Containing 10 and 20 Mole Percent CH_4 in CO_2 in Equilibrium with Water and/or Hydrate* - Kyoo Song, Riki Kobayashi & Walter Chapman, Rice University, Houston, Texas.

OTHER SOURCES OF INFORMATION

AFNOR **Association Francaise de Normalisation**
11, avenue Francis de Pressense
93571 Saint-Denis La Plaine Cedex
France
Phone: 01 41 62 80 00
Fax: 01 49 17 90 00
www.afnor.fr

AGA **American Gas Association**
400 N. Capitol St., NW
Washington, DC 20001
Phone: (202) 824-7000
Fax: (202) 824-7115
www.aga.org

AIChE **American Institute of Chemical Engineers**
3 Park Ave.
New York, NY 10016
(212) 591-7338
www.aiche.org

AISC **American Institute of Steel Construction**
1 East Walker Dr., Ste 3100
Chicago, IL 60601
(312) 670-2400

AISI **American Iron and Steel Institute**
1101 17th St., N.W., Ste 1300
Washington, D.C. 20036
(202) 452-7100

ANSI **American National Standards Institute**
25 West 43rd St., 4th Floor
New York, NY 10036
(212) 642-4900

API **American Petroleum Institute**
1220 L. Street, N.W.
Washington, D.C. 20005
(202) 682-8000
www.api.org

ASHRAE **American Society of Heating, Refrigerating & Air-Conditioning Engineers**
1791 Tullie Circle, N.E.
Atlanta, GA 30329
(404) 636-8400
www.ashre.org

ASME **American Society of Mechanical Engineers**
United Engineering Center
3 Park Ave.
New York, NY 10016
(212) 591-7000
www.asme.org

ASTM **American Society for Testing and Materials**
100 Barr Harbor Dr.
West Conshohocken, PA 19428
(610) 832-9500
www.astm.org

BSI **British Standards Institution**
389 Chiswick High Road
London, UK W4 4AL
Phone: +44 0208 996 9000
Fax: +44 0208 996 6452
www.bsi.org.uk

CGPA **Canadian Gas Processors Association**
Ste. 500, 900 6th Ave. SW
Calgary, Alberta
CANADA T2P 3K2
(403) 263-5388
www.cgpsa.com

CTI **Cooling Tower Institute**
2611 FM 1960 West, Ste. H200
Houston, TX 77068
(281) 583-4087
www.cti.org

GTI **Gas Technology Institute**
1700 S. Mount Prospect Road
Des Plaines, IL 60018
(773) 399-8100
www.gastechnology.org

IHS **Information Handling Services**
15 Inverness Way East
P.O. Box 1154
Englewood, CO 80150-1154
(800) 241-7824
www.ihs.com

IEEE **Institute of Electrical and Electronics Engineers**
445 Hoes Lane
Piscataway, NY 08854
(212) 419-7900
www.ieee.org

IP Institute of Petroleum
61 New Cavendish Street
London W1M 8AR, U.K.
Phone: 44 0207 467 7100
Fax: 44 0207 255 1472
Email: ip@petroleum.co.uk

ISA **Instrument Society of America**
67 Alexander Drive
Box 12277
Research Triangle Park, NC 27709
(919) 549-8411
www.isa.org

ISO **International Organization for Standardization**
Case postale 56
CH-211 Geneva, Switzerland
Phone: 4122 749 0111
Fax: 4122 733 3430

NACE **National Association of Corrosion Engineers**
P.O. Box 201009
Houston, TX 77216-1009
(281) 492-0535
www.nace.org

NFPA **National Fire Protection Association**
1 Batterymarch Park
Quincy, MA 02269
(617) 770-3000
www.nfpa.org

NOAA **National Oceanic and Atmospheric Administration**
National Climatic Center
151 Patton Ave., Rm 120
Asheville, NC 28801-5001
Phone: (828) 271-4800
Fax: (828) 271-4876
www.ncdc.info@noaa.gov

NPGA **National Propane Gas Association**
1150 17th St. NW, Ste. 310
Washington, DC 20036
(202) 466-7200
www.npga.org

SPE **Society of Petroleum Engineers**
Box 833836
Richardson, TX 75083
(972) 952-9393
www.spe.org

Tech Street
1327 Jones Drive
Ann Arbor, MI 48105
(800) 699-9277
www.techstreet.com

TEMA **Tubular Exchanger Manufacturers Association**
25 North Broadway
Tarrytown, NY 10591
(914) 332-0040
www.tema.org

NOTES:

SECTION 2

Product Specifications

This Section contains the following specifications for natural gas liquid products:

- Fig. 2-1: GPA specifications for commercial propane, commercial butane, commercial butane-propane mixtures, and Propane HD-5.[1]
- Fig. 2-2: GPA specifications for natural gasoline.[2]

These are "official" industry standards, representing a broad industry consensus for minimum quality products. Producers, purchasers, or pipeline companies may adopt variations of these specifications.

The gas plant designer and operator, as well as purchasers, will also be concerned with specifications for other plant products, including residue gas, raw mix streams, ethane, propane, ethane-propane mixes, normal butane, iso-butane, and plant condensate. Although there are no "official" industry specifications for normal butane, common commercial transactions for normal butane stipulate that the product shall meet all specifications for commercial butane and, in addition, be composed of a minimum of 95 volume percent normal butane. Common commercial specifications for iso-butane stipulate that the product contain a minimum of 95 volume percent iso-butane, and also meet all specifications for commercial butane.

Likewise, there are no industry standard specifications for ethane or ethane-propane (EP) mixes. However, GPA Technical Section C on product specifications has provided a summary of typical quality criteria in industry use as shown in Fig. 2-3.

Quality specifications for natural gas have historically been individually negotiated and prescribed in contracts between purchasers or pipeline companies and the producer or processor. Specification parameters for pipeline quality natural gas may include heating value, composition, contaminants, water content, and hydrocarbon dew point. Specification limits for these parameters may vary widely depending on the pipeline system, climatological conditions, end use, and other factors. Example pipeline quality gas specification parameters are shown in Fig. 2-4.

FIG. 2-1

GPA Liquefied Petroleum Gas Specifications (This Table Extracted From GPA Standard 2140-97)

Product Characteristics	Product Designation				
	Commercial Propane	Commercial Butane	Commercial B-P Mixtures	Propane HD-5	Test Methods
Composition	Predominantly propane and/or propylene.	Predominantly butanes and/or butylenes.	Predominantly mixtures of butanes and/or butylenes with propane and/or propylene.	not less than 90 liquid volume percent propane; not more than 5 liquid volume percent propylene.	ASTM D-2163-91
Vapor pressure at 100°F, psig, max.	208	70	208	208	ASTM D-1267-95
at 37.8°C, kPa (ga), max.	1434	483	1434	1434	
Volatile residue:					
temperature at 95% evaporation, °F, max.	–37	36	36	–37	ASTM D-1837-94
or °C, max.	–38.3	2.2	2.2	–38.3	
butane and heavier, liquid volume percent max.	2.5	—	—	2.5	ASTM D-2163-91
pentane and heavier, liquid volume percent max.	—	2.0	2.0	—	ASTM D-2163-91
Residual matter:					
residue on evaporation of 100 ml, max.	0.05ml	—	—	0.05 ml	ASTM D-2158-92
oil stain observation	pass (1)	—	—	pass (1)	ASTM D-2158-92
Corrosion, copper strip, max.	No. 1	No. 1	No. 1	No. 1	ASTM D-1838-91 (Note A)
Total sulfur, ppmw	185	140	140	123	ASTM D-2784-92
Moisture content	pass	—	—	pass	GPA Propane Dryness Test (Cobalt Bromide) or D-2713-91
Free water content	—	none	none	—	—

(1) An acceptable product shall not yield a persistent oil ring when 0.3 ml of solvent residue mixture is added to a filter paper in 0.1 increments and examined in daylight after 2 minutes as described in ASTM D-2158.

NOTE A: "This method may not accurately determine the corrosivity of the liquefied petroleum gas if the sample contains corrosion inhibitors or other chemicals which diminish the corrosivity of the sample to the copper strip. Therefore, the addition of such compounds for the sole purpose of biasing the test is prohibited."

FIG. 2-2

GPA Natural Gasoline Specifications and Test Methods

Scope: These specifications state the required properties of Natural Gasoline. Natural gasoline is a mixture of liquid hydrocarbons extracted from natural gas, composed principally of pentanes and heavier hydrocarbons, although varying amounts of butanes may be included, depending on the commercial grade.

Natural gasoline is defined further for commercial purposes by the following:

Product Characteristic	Specification	Test Method
Reid Vapor Pressure	10-34 pounds	ASTM D-323
Percentage evaporated at 140°F	25-85	ASTM D-216
Percentage evaporated at 275°F	Not less than 90	ASTM D-216
End Point	Not more than 375°F	ASTM D-216
Corrosion	Not more than classification 1	ASTM D-130 (modified)
Color	Not less than plus 25 (Saybolt)	ASTM D-156
Reactive Sulfur	Negative, "sweet"	GPA 1138

In addition to the above general specifications, natural gasoline shall be divided into 24 possible grades on the basis of Reid vapor pressure and percentage evaporated at 140°F. Each grade shall have a range in vapor pressure of four pounds, and a range in the percentage evaporated at 140°F of 15%. The maximum Reid vapor pressure of the various grades shall be 14, 18, 22, 26, 30, and 34 pounds, respectively. The minimum percentage evaporated at 140°F shall be 25, 40, 55, and 70, respectively. Each grade shall be designated by its maximum vapor pressure and its minimum percentage evaporated at 140°F, as shown in the following table:

Grades of Natural Gasoline
Percentage Evaporated at 140°F

Reid Vapor Pressure, psi	25%	40%	55%	70%	85%
34	Grade 34-25	Grade 34-40	Grade 34-55	Grade 34-70	
30	Grade 30-25	Grade 30-40	Grade 30-55	Grade 30-70	
26	Grade 26-25	Grade 26-40	Grade 26-55	Grade 26-70	
22	Grade 22-25	Grade 22-40	Grade 22-55	Grade 22-70	
18	Grade 18-25	Grade 18-40	Grade 18-55	Grade 18-70	
14	Grade 14-25	Grade 14-40	Grade 14-55	Grade 14-70	
10					

LP-GAS SPECIFICATION PARAMETERS

LP-gas specifications of GPA Standard 2140, shown in Fig. 2-1, are the industry standards in the United States. International specifications, adopted in ISO 9162, are shown in Fig. 2-5.[14]

In many cases, specification parameters for LP-gas are based on simple "pass-fail" test methods that can be performed quickly and easily by field personnel. These specifications and test methods are intended to assure products that can be safely handled in transport systems, and that will perform adequately and safely in their end-use markets. Unfortunately, many of these tests tell the design engineer or plant operator little about product composition or quantitative limits. The following discussion is intended to provide an indication of product composition and quantitative limits imposed by these industry specifications.

FIG. 2-3

Representative Quality Criteria for Ethane Streams

	Weight Percent		
	Low	**High**	**Common**
High-Ethane Raw Streams			
Methane and Lighter	1.0	5.0	1.0
Ethane Propane Isobutane & Heavier	Remainder	Remainder	Remainder
Contaminant Maximums:			
Hydrogen Sulfide	No. 1 Strip	50 ppmw	No. 1 Strip
Carbon Dioxide	100 ppmw	3,500 ppmw	500 ppmw
Sulfur	5 ppmw	200 ppmw	200 ppmw
Oxygen	300 ppmw	–	–
Moisture	75 ppmw	No free	No free
Ethane-Propane Mixes			
Methane and Lighter	0.6	1.0	0.6
Ethane	20	80	50
Propane	20	80	50
Isobutane & Heavier	0.2	4.5	4.5
Contaminant Maximums:			
Hydrogen Sulfide	No. 1 Strip	No. 1 Strip	No. 1 Strip
Carbon Dioxide	500 ppmw	3,000 ppmw	500 ppmw
Sulfur	5 ppmw	143 ppmw	100 ppmw
Oxygen	500 ppmw	1,000 ppmw	1,000 ppmw
Moisture	10 ppmw	No free	50 ppmw
High-Purity Ethane			
Methane and Lighter	1.5	2.5	2.5
Ethane	90.0	96.0	90.0
Propane	6.0	15.0	6.0
Isobutane & Heavier	0.5	3.0	2.0
Contaminant Maximums:			
Hydrogen Sulfide	6 ppmw	10 ppmw	10 ppmw
Carbon Dioxide	10 ppmw	5,000 ppmw	10 ppmw
Sulfur	5 ppmw	70 ppmw	50 ppmw
Oxygen	5 ppmw	5 ppmw	5 ppmw
Moisture	13 ppmw	No free	76 ppmw

Vapor Pressure

Vapor pressure is a critical specification that must be observed for safe and efficient utilization of propane, butane, and butane/propane mixtures in domestic and commercial installations, and to comply with various regulations governing transport vessels and cylinders.[3]

The GPA vapor pressure specification limit for propane meets the requirements of U.S. Department of Transportation regulations by effectively limiting the ethane content of commercial propane and propane HD-5 to a maximum of approximately 7 volume percent. Any appreciable quantity of propylene, permitted in commercial propane only, would necessarily reduce the amount of permissible ethane due to the higher vapor pressure of propylene relative to that of propane. Likewise, variations in the butane content of propane, limited to 2.5 volume percent, will impact the amount of ethane permitted by the vapor pressure specification.

Moisture Content

Moisture in propane must be controlled to very low concentrations to avoid hydrate formation in pipelines and freezing in tanks, regulating equipment, and other equipment in the distribution system.

FIG. 2-4

Example Pipeline Quality Natural Gas
Adapted from AGA Report No. 4A, May 2001

	Minimum	Maximum
Major and Minor Components, mol%		
Methane	75	–
Ethane	–	10
Propane	–	5
Butanes	–	2
Pentanes and heavier	–	0.5
Nitrogen and other inerts	–	3
Carbon Dioxide	–	2-3
Total Diluent Gases	–	4-5
Trace Components		
Hydrogen sulfide	–	0.25-0.3 gr/100 scf
Mercaptan sulfur	–	–
Total sulfur	–	5-20 gr/100 scf
Water vapor	–	4.0-7.0 lb/mmcf
Oxygen	–	1.0%
Other Characteristics		
Heating value, Btu/scf-gross saturated	950	1150
Liquids: Free of liquid water and hydrocarbons at delivery temperature and pressure.		
Solids: Free of particulates in amounts deleterious to transmission and utilization equipment. (3-15 microns, max.)		

Although a properly designed and operated dehydration system produces very dry propane, moisture can and does enter the transportation and distribution system at many points, such as storage tanks, loading racks, and transport vessels.

There are two recognized methods for determining acceptable levels of moisture in propane products: the GPA Cobalt Bromide Test, and the Valve Freeze method (ASTM D-2713). Both are "pass-fail" tests that provide qualitative determinations of commercially "dry" propane, but neither method yields quantitative measures of moisture in the product.

The Cobalt Bromide test is based on the work of Hachmuth[4], which determined acceptable levels of moisture in commercial equipment, and correlated these levels with results of the test procedure. The test is based on observation of color changes of cobalt bromide salt caused by the humidity of the gas or vapor surrounding it. In practice, the cobalt bromide is supported on white cotton wadding and exposed to a stream of propane vapors chilled to 32°F. The color of the cobalt bromide changes from green to lavender at about 30% relative humidity, indicating "wet" propane. Propane-water system data[7,8,11] indicate that the water content of saturated propane vapors at 32°F is approximately 530 ppmw. The water content of saturated propane liquid is approximately 35 ppmw at 32°F. At 30% saturation at 32°F, commercially "dry" propane as measured by the Cobalt Bromide test will be about 159 ppmw in the vapors and about 10 ppmw in the liquid. Based on these specification limits at 32°F, Fig. 2-6 gives maximum allowable water content of liquid propane at other system temperatures.

The valve freeze method was developed to detect excessive moisture in liquid propane, and is preferred by some over the Cobalt Bromide test. The test device is a specially constructed and calibrated orifice valve designed to simulate expansion of propane through a pressure regulator. A liquid sample of the product to be tested is passed through the valve at a preset flow rate. The time required for the valve to freeze and interrupt flow due to moisture in the product determines whether or not the product is commercially "dry." Test data reveals that a freeze-off time of more than 60 seconds indicates less than 30 ppmw moisture in the liquid product. The method is not applicable to propane products containing anti-freeze agents such as methanol. It is also affected by the temperature of the liquid sample.

A third method, the Bureau of Mines dew point tester, is a simple field test still used by some, but is not recommended because its accuracy is dependent on many poorly controlled variables, such as temperature and pressure of the system. This method was originally developed by the U.S. Bureau of Mines and is still used as a field method to determine moisture content in natural gas systems.

Butane specifications stipulate "no free water." Since butane cannot be used in vapor withdrawal systems at temperatures below its boiling point, water content is not detrimental for most butane uses.

Sulfur Content

Certain compounds of sulfur must be controlled to extremely low levels in LP-gases to prevent corrosion in distribution facilities. The standard test for corrosivity is the Copper Corrosion Test (ASTM D-1838). In this test, a polished copper strip is immersed in the product sample for one hour at 100°F. The test strip is then rated by comparison with the four color classifications of ASTM Copper Corrosion Standards:

FIG. 2-5

Specifications for Liquefied Petroleum Gases
This table extracted from ISO 9162-1989

Characteristics	Method of Test	Commercial Propane ISO-F-LP	Commercial Butane ISO-F-LB
Gauge vapor pressure at 104°F, psig, max.	ISO 4256[2] or ISO 8973	225[1]	75[1]
Volatility			
C_2 hydrocarbons		Report value[3]	
C_4 hydrocarbons, mole %, max.	ISO 7941	7,5[1]	
C_5 hydrocarbons, mole %, max.	ISO 7941	0,2[6]	2,5[6]
Unsaturated hydrocarbons, mole %	ISO 7941	Report value[4]	Report Value[4]
Dienes, mole %, max.	ISO 7941	0,5[6]	0,5[6]
Residual matter	[5]	[5]	[5]
Corrosiveness to copper, max.	ISO 6251	1	1
Sulfur, mg/kg, max.	[7]	50[6]	50[6]
Hydrogen sulfide	ISO 8819	Pass	Pass
Free water content		None[8]	None[8]

[1] Certain national standards and/or regulations may prescribe other limits.

[2] In case of dispute about the vapor pressure, ISO 4256 shall prevail.

[3] Physical limitations of transport and storage facilities shall be considered for refrigerated transport; a common limit is 2 mole % maximum.

[4] Certain national standards may prescribe a limitation on unsaturated hydrocarbons.

[5] It has not been possible to take a decision on a value for inclusion in this specification because there is no suitable ISO test method and no satisfactory correlation between the test results obtained using methods developed in different countries. Limits will be specified when a suitable test method has been adopted. Until a suitable test method has been adopted, the user of this specification is referred to the introductory discussion and proposed test method discussed in ISO 9162-1989. Report the value for the sample concerned, and the method used to determine it, as additional information.

[6] Certain national standards may prescribe other limits.

[7] An ISO method specific to liquefied petroleum gas is being developed. Until such an ISO method is available, ISO 4260 is recommended as the referee method. Other methods specified in national standards, and having a valid precision statement, are acceptable for quality control purposes.

[8] The presence of water shall be determined by visual inspection. For shipments of refrigerated liquefied petroleum gases at their atmospheric boiling point, it is essential that the water content is below the saturation level at this temperature as determined by a method agreed between buyer and seller.

No.1	Slight tarnish (light to dark orange)
No.2	Moderate tarnish (red, lavender, brassy gold)
No.3	Dark tarnish (magenta, red, green)
No.4	Corrosion (black, dark gray, brown)

Specifications for LP-gas products stipulate that the product must not exceed a No.1 strip, indicating product that is not corrosive to copper or brass fittings in the distribution system.

FIG. 2-6

Maximum Water Content of Dry Commercial Liquid Propane*

Temp., °F	H_2O, ppmw	% Saturated
100	21	8
80	18	11
60	15	16
40	11	24
32	10	30

* These numbers are approximate

LP-gas from some sources may contain trace amounts of carbonyl sulfide (COS), which alone is non-corrosive. However, COS can hydrolyze in the presence of water, either liquid or vapor, to corrosive hydrogen sulfide (H_2S). The copper strip corrosion test requires that the test cylinder be wetted with approximately 1 ml of water prior to introduction of the sample, which is intended to hydrolyze the COS into H_2S and ensure detection of corrosive product. If COS is suspected, additional product testing (See GPA Standard 2290) and treatment is recommended to prevent its introduction into the distribution system.

Sulfur chemistry is extremely complex, and little scientific work has been done to correlate copper strip test results, either quantitatively or by species, with the multitude of sulfur compounds that may be encountered in natural gas liquid products. However, specific test data by Pyburn et al[6] indicate that hydrogen sulfide concentrations of 0.55 ppmw or more in propane almost certainly will produce a failure of the copper strip test; as little as 0.3 ppmw might fail, depending on interpretation of the test. These data also suggest that the threshold limit of elemental sulfur is approximately 5-10 ppmw, although concentrations as low as 2 ppmw may cause failure of the copper strip test.

Additional data suggest that elemental sulfur in the presence of hydrogen sulfide results in a synergistic effect that will cause failure of the copper strip test with trace concentrations

FIG. 2-7

Concentration H_2S vs. Copper Strip Produced

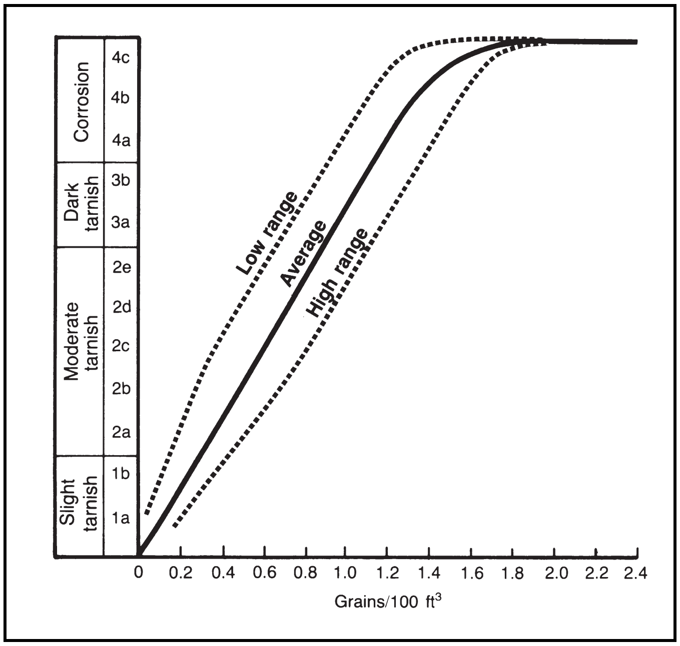

of either contaminant. Specifically, concentrations of 0.5 ppmw elemental sulfur, together with 0.28 ppmw hydrogen sulfide in propane were observed to fail the corrosion test. The threshold value of hydrogen sulfide may be as low as 0.12 ppmw in the presence of 0.5 ppmw elemental sulfur.

Fig. 2-7 is based on field test data on corrosivity limits in high ethane content mixtures. The curves are approximate and should not be used for design purposes. Perry[10] states that a No.1 copper strip is generally thought to represent hydrogen sulfide concentrations below 1-2 ppmw. As noted above, other research[6] indicates a synergistic corrosion effect of extremely small amounts of H_2S if free sulfur is present in the stream.

From other observations, Pyburn et al[6] report the following additional conclusions about corrosive elements in LP-gas that may affect the copper corrosion test:

1. H_2S and elemental sulfur are the corrosive agents.
2. H_2S and elemental sulfur act synergistically on the copper corrosion test.
3. Polysulfides may contribute to copper corrosion.
4. Mercaptans in the presence of elemental sulfur enhance corrosion.
5. Mercaptans in the presence of hydrogen sulfide inhibit corrosion.
6. To be safe, all sulfur compounds should be reduced to the lowest possible level.
7. *No hydrogen sulfide should be present.*
8. If any sulfur compounds are present, the product should be dry.
9. Mixing of propane or other products from two sources, both of which passed the copper corrosion test, may result in a failure of the mixture to pass the test.
10. Changes in sulfur species may occur during transit under some conditions.

GPA specifications permit a maximum of 123 ppmw total sulfur in Propane HD-5; 185 ppmw in commercial propane; and 140 ppmw in butanes. It should be noted, however, that these same specifications require that the product not exceed the No.1 copper strip. If these two specifications are in conflict, the more stringent will govern.

To convert from parts per million by weight (ppmw) of H_2S to grains per 100 ft³, measured at 60°F and 14.7 psia, use the following formula for any hydrocarbon:

$$\text{grains}/100\ \text{ft}^3 = (\text{ppmw}_{\ H_2S})(MW_{gas})(0.001845) \qquad \textbf{Eq 2-1}$$

Volatile Residue

The volatile residue specification, coupled with the vapor pressure limit, assures essentially single-component products for propane and butane, and essentially two-component products for butane-propane mixtures. The predominant volatile residue in propane is butane, limited to 2.5 volume percent; the predominant volatile residue in butane is pentane or heavier hydrocarbons, limited to 2 volume percent. These compositional limits assure that 95 volume percent of the product will be vaporized at temperatures slightly above the normal boiling point of the product, which may be confirmed by a field distillation test.

Non-volatile Residue

The non-volatile residue specification imposes a rigid limit on extraneous contaminants boiling above 100°F, which may result in fouling of vaporizers used in liquid withdrawal systems. The principal sources of such contaminants are typically compressor oils, valve lubricants, plasticizers from rubber hoses, corrosion inhibitors, or other heavy petroleum products from pumps, pipelines, or storage vessels that may be used in multiple services. The specification limit is 0.05 ml per 100 ml of test sample, or 500 ppmv. The common residues in the gasoline boiling range usually present little problem in utilization systems. However, very heavy residues can be present, and must be identified and eliminated from the system.

Non-Specification Contaminants

Although the range of possible contaminants in LP-gas is very great, serious problems are rare, but can occur. The most serious contaminants encountered are ammonia (See GPA Standard 2187), fluorides, and organic fluorides. NFPA 58[12] stipulates that LP-gas "shall not contain ammonia," because of its propensity to induce stress corrosion cracking in copper and brass fittings commonly used in propane utilization systems. Fluorides and organic fluorides are possible contaminants in propane produced from refinery operations, notably HF alkylation processes, which dictates that production from such units should be thoroughly and continuously monitored to prevent contamination of the distribution system.

Natural gas liquids destined for petrochemical feedstocks may also be subject to additional contractual specification limits, depending on special down-stream processing requirements. Some of these requirements may include limits on dienes, isomers, alcohols, halides and other trace contaminants.

Odorization

Regulatory codes applicable to the distribution of natural gas and LP gas require these gases to be odorized such that the gas is readily detectable by a distinct odor, at one-fifth of the lower limit of flammability of the gas in air.[12] An excellent reference covering

- Odorization regulations
- Chemical and physical properties of odorants
- Odorization system design considerations
- Odorization equipment and stations
- Monitoring methods
- Safety and environmental
- Odorant stability and olfactory response

has been published by the American Gas Association.[13]

Iso 13734 – "Natural Gas – Organic Sulfur Compounds used as Odorants – Requirements and Test Methods" will be another reference when it is published.

REFERENCES

1. GPA Standard 2140-92: "Liquefied Petroleum Gas Specifications and Test Methods," Gas Processors Association.
2. GPA Standard 3132-84: "Natural Gasoline Specifications and Test Methods," Gas Processors Association.
3. Title 49, Code of Federal Regulations, Parts 173.301(f); 173.314(d).
4. Hachmuth, K. H., "Dehydrating Commercial Propane," Butane-Propane News, January, 1932.
5. Shock, D.A., "Research on Evaluation of Copper Strip for Corrosive Sulfur in LPG," Gas Processors Association, 1949.
6. Pyburn, C.M., Cahil, F.P., and Lennox, R.K., "The Effect of Sulfur Compound Interactions on the Copper Corrosion Test in Propane," Proceedings, 57th Annual Convention, Gas Processors Association.
7. Poettman, F.H., and Dean, M.R., "Water Content of Propane," Petroleum Refiner, December, 1946.
8. Kobayashi, R. and Katz, D.L., "Vapor-Liquid Equilibria for Binary Hydrocarbon-Water Systems," Industrial and Engineering Chemistry, February, 1953.
9. Baumer, J.A., "Large Scale Liquid-Liquid DEA Treating for Fractionation Plants," Oil & Gas Journal, March 15, 1982.
10. Perry, C.R., "Several Treating Options Open for Ethane Recovery Plants," Oil & Gas Journal, May 23, 1977.
11. Kahre, L.C., Phillips Petroleum Company Project Report DA-2, 1972.
12. National Fire Protection Association (NFPA) No. 58, "Standard for the Storage and Handling of Liquefied Petroleum Gases."
13. AGA Odorization Manual, Dec. 2000.
14. ISO 9162 (1989), "Specifications for Liquefied Petroleum Gases," International Standards Organization.

SECTION 3

Measurement

The information presented in this section provides sufficient information for determining flow quantities with a reasonable degree of accuracy, but not necessarily to the accuracy desired for custody transfer. Agreement of acceptable accuracy for custody transfer should be between the parties involved, and supplemental information and procedures may be required, such as the API Manual of Petroleum Measurement Standards.

FIG. 3-1

Nomenclature

C = Pitot tube flow coefficient
C' = the product of multiplying all orifice correction factors
CNT = volume indicated by the number of pulses or counts
C_{pl} = liquid pressure correction factor. Correction for the change in volume resulting from application of pressure. Proportional to the liquid compressibility factor, which depends upon both relative density and temperature.
C_{ps} = correction factor for effect of pressure on steel. See API Manual of Petroleum Measurement Standards, Chapter 12, Section 2
C_g = gravity correction factor for orifice well tester to change from a gas specific gravity of 0.6
C_{tl} = liquid temperature correction factor. Proportional to the thermal coefficient which varies with density and temperature
C_{ts} = correction factor for effect of temperature on steel
C_u = velocity of sound in the gas non-flowing condition.
d = orifice diameter, in.
D = internal pipe diameter of orifice meter run or prover section, in.
DL = Minimum downstream meter tube length, in.
D_p = the difference between the flowing pressure and the equilibrium vapor pressure of the liquid.
D_u = diameter of the meter bore.
ρ = flowing fluid density, lb/ft^3
e = orifice edge thickness, in.
E = orifice plate thickness, in.
E_m = modulus of elasticity for steel $[(30)(10^6)]$ psi
F = liquid compressibility factor
F_a = orifice thermal expansion factor. Corrects for the metallic expansion or contraction of the orifice plate. Generally ignored between 0° and 120°F
F_g = specific gravity factor applied to change from a specific gravity of 1.0 (air) to the specific gravity of the flowing gas
F_{gt} = gravity-temperature factor for liquids
F_c = orifice calculation factor
F_n = numeric conversion factor
F_{na} = units conversion factor for pitot tubes
F_{pb} = pressure base factor applied to change the base pressure from 14.73 psia
F_{pm} = pressure factor applied to meter volumes to correct to standard pressure. See API Manual of Petroleum Measurement Standards, Chapter 12, Section 2
F_{pv} = supercompressibility factor required to correct for deviation from the ideal gas laws = $\sqrt{1/Z}$
F_s = steam factor
F_{sl} = orifice slope factor
F_{tb} = temperature base factor. To change the temperature base from 60°F to another desired base
F_{tf} = flowing temperature factor to change from the assumed flowing temperature of 60°F to the actual flowing temperature
F_{tm} = temperature correction factor applied to displacement meter volumes to correct to standard temperature. See API Manual of Petroleum Measurement Standards, Chapter 12, Section 2
G, G_1 = specific gravity at 60°F
G_f = specific gravity at flowing temperature
H = pressure, inches of mercury
h_m = differential pressure measured across the orifice plate in inches of mercury at 60°F
h_w = differential pressure measured across the orifice plate in inches of water at 60°F
$\sqrt{h_w P_f}$ = pressure extension. The square root of the differential pressure times the square root of the absolute static pressure
k = ratio of the specific heat at constant pressure to the specific heat at constant volume
K = a numerical constant. Pulses generated per unit volume through a turbine, positive displacement, coriolis or ultrasonic meter
Key = $F_n (F_c + F_{sl})$ = orifice factor
L = distance between upstream and downstream transducer.
LTB = Length of tube bundle, in flow conditioner, in. (See Fig. 3-3)
MF = meter factor, a number obtained by dividing the actual volume of liquid passed through the meter during proving by the volume registered by the meter
P = pressure, psia

FIG. 3-1 (Cont'd)

P_b = base pressure, psia
Pf_1, Pf_2 = static pressure at either the upstream(1) or downstream(2) pressure tap, psia
P_p = operating or observed pressure, psig.
P_s = pressure at which the base volume of a meter prover was determined, usually 0 psig.
P_1/P_2 = pressure ratio
Q = gas flow rate, cu ft/day
Q_h = rate of flow, std. cu ft/hr or gal./hr
R_h = maximum differential range, in. of water
R_p = maximum pressure range of pressure spring, psi
S = square of supercompressibility
SEP = Separation distance between elbows, in. (See Fig. 3-9)
SPU = Signal Processing Unit, the electronic microprocessor system of the multi-path ultrasonic meter.
t1 = transit time from upstream transducer to downstream transducer.
t2 = transit time from downstream transducer to upstream transducer.
T_b = base temperature, °F
T_f = flowing temperature, °F
T_{meas} = reference temperature of the orifice plate bore, °F
UL = Minimum upstream meter tube length, in. (See Fig. 3-9)
UL1 = See Fig. 3-9
UL2 = See Fig. 3-9
UM = ultrasonic meter for measuring gas flow rates
V = velocity of flowing gas.
VOS = velocity of sound
X = axial distance separating transducers
Y = expansion factor to compensate for the change in density as the fluid passes through an orifice
Y_{CR} = critical flow constant
Z = compressibility factor
β = ratio of the orifice or throat diameter to the internal diameter of the meter run, dimensionless

---

The American Petroleum Institute Manual of Petroleum Measurement Standards is the source of a large portion of the information presented in this Section. Copies of the complete API Manual of Petroleum Measurement Standards or specific chapters and sections can be ordered from:

American Petroleum Institute
Publications and Distribution Section
1220 L Street Northwest
Washington, D.C. 20005
www.api.org

CHAPTER	API TITLE
1	Vocabulary
2	Tank Calibration
3	Tank Gauging
4	Proving Systems
5	Metering
6	Metering Assemblies
7	Temperature Determination
8	Sampling
9	Density Determination
10	Sediment and Water
11	Physical Properties Data
12	Calculation of Petroleum Quantities
13	Statistical Aspects of Measuring and Sampling
14	Natural Gas Fluids Measurement
15	Guidelines for use of SI units
16	Petroleum Measurement by Weight
17	Marine Measurement
18	Custody Transfer
19	Evaportion Loss Measurement
20	Allocation Measurement of Oil and Gas

Chapter 14 is of particular interest to Gas Processors because it applies specifically to the measurement of gas and liquefied gas products. Chapter 14 is further divided as follows:

SECTION	API TITLE
14.1	Sampling of Natural Gas
14.2	Compressibility Factors of Natural Gas
14.3	Concentric, Square-Edged Orifice Meters (AGA Report No. 3)
14.4	Converting Mass of Natural Gas Liquids and Vapors to Equivalent Liquid Volumes (GPA 8173)
14.5	Calculation of Gross Heating Value, Specific Gravity, and Compressibility of Natural Gas Mixtures from Compositional Analysis (GPA 2172)
14.6	Installing and Proving Density Meters
14.7	Mass Measurement of Natural Gas Liquids (GPA-8182)
14.8	Liquefied Petroleum Gas Measurement

FLOW CALCULATION GUIDE

The Flow Calculation Guide (Fig. 3-2) is the suggested starting point for any fluid measuring determination. This chart identifies the necessary data to determine flows of gas, liquid, and steam using mechanical meters or differential pressure devices. The equations to determine either volumetric or mass quantities are shown in Fig. 3-4.

GAS MEASUREMENT

Orifice-Meter Measurement

The most commonly used differential measurement device, the orifice meter, is widely accepted for use in measuring volumes of liquids or vapors.

The procedures presented in this chapter for calculating flow by use of an orifice meter are designed to provide *approximate* solutions using a hand calculator or equivalent, and do not include the rigorous, iterative solution procedures required when using the Reader-Harris/Gallagher flow equation recommended for accurate, custody transfer calculations with computing equipment. The procedures for applying the Reader-Harris/Gallagher equation can be found in Chapter 14.3 of the API Manual of Petroleum Measurement Standards.

FIG. 3-2

Flow Calculation Guide

Factors	Units	Gas				Liquid				Steam	Fig. #
		Turbine or Displacement		Orifice		Orifice		Turbine or Displacement		Orifice	
		Mass	Vol	Mass	Vol	Mass	Vol	Mass	Vol	Mass	
Units of Measurement	⇒	lb/hr	scf/hr	lb/hr	scf/hr	lb/hr	gph	lb/hr	gph	lb/hr	
Square Root of Differential	$\sqrt{h_w}$	—	—	•	•	•	•	—	—	•	—
Square Root of Static Pressure	$\sqrt{P_f}$	—	—	—	•	—	—	—	—	—	—
Orifice Factor (KEY)	$F_n \bullet (F_c+F_{sl})$	—	—	•	•	•	•	—	—	•	3-13
Pressure Base Factor	F_{pb}	—	•	—	•	—	—	—	—	—	3-4
Flowing Temperature Factor	F_{tf}	—	—	—	•	—	—	—	—	—	3-4
Temperature Factor	F_{tm}	—	•	—	—	—	—	—	—	—	3-1
Temp Correction Factor (Liquids)	C_{tl}	—	—	—	—	—	—	—	•	—	3-1
Pressure Correction Factor (Liquids)	C_{pl}	—	—	—	—	—	—	—	•	—	3-4
Pressure Factor	F_{pm}	—	•	—	—	—	—	—	—	—	3-1
Supercompressibility Factor	F_{pv}	—	—	—	•	—	—	—	—	—	23-4
Square of Supercompressibility Factor	S	—	•	—	—	—	—	—	—	—	3-1
Density	ρ	•	—	—	—	—	—	•	—	—	3-1
Square Root of Density	$\sqrt{\rho}$	—	—	•	—	•	—	—	—	•	—
Specific Gravity Factor — Gas	F_g	—	—	—	•	—	—	—	—	—	3-4
Gravity-Temperature Factor — Liquid	F_{gt}	—	—	—	—	—	•	—	—	—	3-4
Meter Factor	MF	•	•	—	—	—	—	•	•	—	3-1
Count (Volume)	CNT	•	•	—	—	—	—	•	•	—	3-1
Constant				1.0618		1.0618					
Steam Factor	F_s									•	3-27/28
Expansion Factor	Y	—	—	•	•	—	—	—	—	•	3-1
Temperature Base Factor	F_{tb}	—	•	—	•	—	—	—	—	—	3-4
Orifice Thermal Expansion Factor	F_a	—	—	•	•	•	•	—	—	•	3-4

Notes:

1. This guide is intended for use in obtaining approximate flows when used in conjunction with data contained in this section as referenced in the far right hand column.
2. To obtain flow, substitute areas containing dots with known numbers and multiply top to bottom.
3. The number of factors used may vary depending on method of calculation in specific application, content of flowing stream, and individual contractual agreements.
4. Factors appearing in shaded areas are not generally necessary for calculating approximate flows.
5. The factors F_{pv}, S, C_{tl}, C_{pl}, Y, and F_a must be obtained for the specific substance being measured.

The orifice meter consists of static pressure and differential-pressure recording gauges connected to an orifice flange or orifice fitting. The orifice meter tube (meter run) consists of upstream and downstream sections of pipe for which size and tolerance have been determined through calculation and which conform to specifications set forth in API Chapter 14.3 (AGA Report No. 3).

The orifice plate is held perpendicular to flow by flanges or a fitting. Bore, circumference, edge sharpness, and other tolerances must meet specifications as set forth in API Chapter 14.3 (AGA Report No. 3).

Orifice Flanges (Fig. 3-5a) — Orifice flanges require that the line be shut down and depressured in order to inspect or change the orifice plate. The flange bolts are loosened and removed. The flanges are spread by use of "jack" bolts, and the plate is removed.

When orifice flanges are used, the pressure tap hole placement may be determined by measuring from the face of the flange to the pressure tap hole center. Allowable variations are shown in Figure (3-7).

Single Chamber Orifice Fitting (Fig. 3-5b) — This fitting also requires that the line be shut down and depressured in order to inspect or change the orifice plate. However, this fitting does not require breaking apart the flanges. Instead, the bolts are loosened on the cover plate and the cover plate removed. The orifice plate holder and orifice plate are then removed from the fitting. These fittings provide precise alignment of the orifice plate.

Dual-Chamber Orifice Fitting (Fig. 3-5c) — This fitting allows the removal and inspection of an orifice plate while the line remains under pressure. It allows the orifice plate holder and orifice plate to be raised into the upper cavity of the fitting by the use of a crank handle. A valve is then closed to separate the upper cavity from the lower cavity of the fitting. The upper cavity is then depressured, the top cover plate removed, and the orifice plate cranked out.

Orifice Plates — The minimum, maximum, and recommended thicknesses of orifice plates for various pipe sizes are given in Figure 3-6. Also shown in this figure are maximum allowable differential pressures for stainless steel plates of the recommended thickness at a maximum temperature of 150 degrees F.

The thickness of the orifice plate at the orifice edge (e) shall meet the following:

The minimum thickness is defined by $e \geq 0.01d$ or $e > 0.005$ in. whichever is greater.

The maximum thickness is defined by $e \geq 0.02d$ or $\leq 0.125d$ whichever is smaller

If the thickness of the orifice plate must be greater than permitted by these limitations, the downstream edge shall be cut away (beveled or recessed) at an angle of 45° ± 15° or less to the face of the plate, leaving the thickness of the orifice edge within these requirements. All orifice plates which are beveled should have the square-edge side (i.e., the side opposite the beveling) stamped "inlet" or the beveled side stamped "outlet".

The upstream face of the orifice plate shall be flat and perpendicular to the axis of the meter tube, when in position between the orifice flanges or in the orifice fitting. Any plate that does not depart from flatness along any diameter by more than 0.010 inch per inch of the dam height, $(D-d)/2$, shall be considered flat. See Figure 3-8.

The upstream edge of the orifice shall be square and sharp so that it will not show a beam of light when checked with an orifice edge gauge, or alternately will not reflect a beam of light when viewed without magnification. The orifice shall not have a burred or feathered edge. It shall be maintained in this condition at all times. Moreover, the orifice plate shall be kept clean at all times and free from accumulation of dirt, ice, and other extraneous material. Orifice plates with small nicks in the edge can be expected to increase the flow measurement uncertainty.

Meter Tubes — The term "meter tube" shall mean the straight upstream pipe ahead of the orifice fitting of the same internal diameter as the orifice fitting (length UL on Fig. 3-9) and the similar downstream pipe (length DL on Fig. 3-9) following the orifice.

The sections of pipe to which the orifice flanges are attached or the sections adjacent to the orifice flange or fitting shall comply with API Chapter 14.3 (AGA Report No. 3).

See Figures 3-10, 3-11, and 3-12 for proper meter tube lengths.

Flow Conditioners (Fig. 3-3) — The purpose of flow conditioners is to eliminate swirls and cross currents set up by the pipe, fittings and valves upstream of the meter tube. Please refer to API Chapter 14.3 (AGA Report No. 3) for detailed specifications for flow conditioners.

FIG. 3-3

1998 Uniform Concentric 19-Tube Bundle Flow Straightener

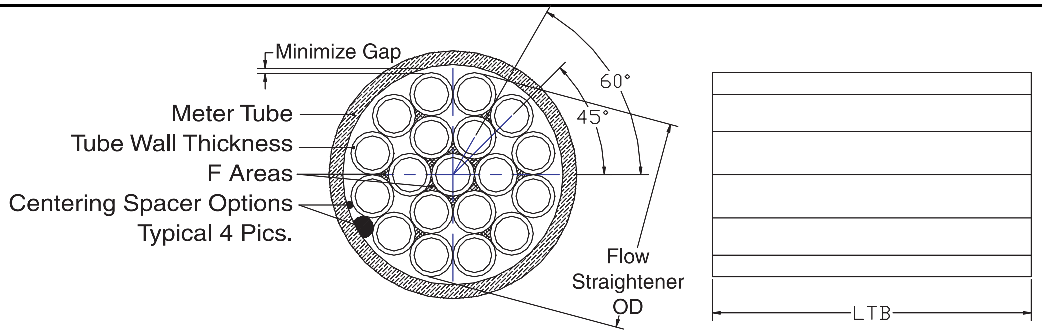

Used by the permission of the copyright holder, American Gas Association.
Reproduced courtesy of the American Petroleum Institute.

FIG. 3-4

Flow Calculation Guide Equations

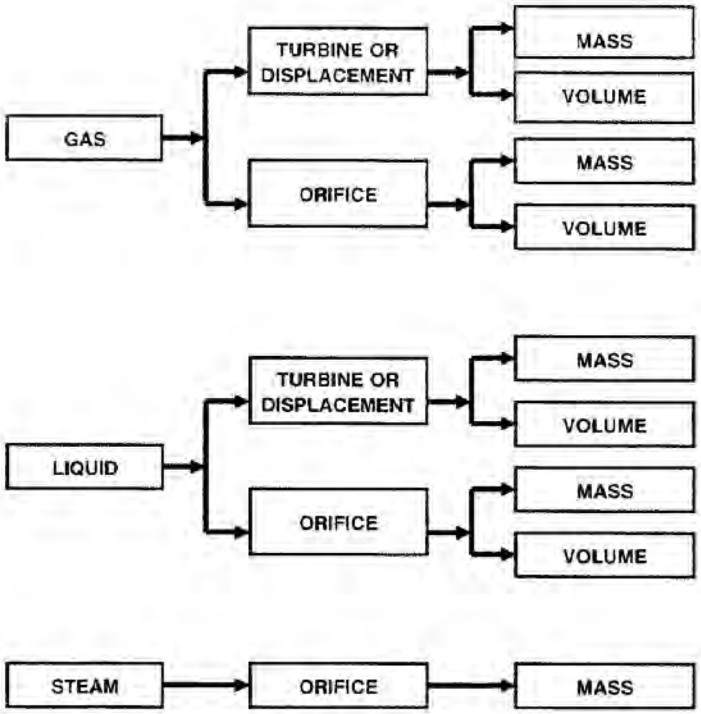

$\text{lb/hr} = \rho \cdot \text{MF} \cdot \text{CNT}$ **Eq. 3-1**

$\text{scf/hr} = F_{pb} \cdot F_{tm} \cdot F_{pm} \cdot S \cdot \text{MF} \cdot \text{CNT} \cdot F_{tb}$ **Eq. 3-2**

$\text{lb/hr} = \sqrt{h_w} \cdot F_n\,(F_c + F_{sl}) \cdot \sqrt{\rho} \cdot 1.0618 \cdot F_a \cdot Y$ **Eq. 3-3**

$\text{scf/hr} = \sqrt{h_w} \cdot \sqrt{P_f} \cdot F_n\,(F_c + F_{sl}) \cdot F_{pb} \cdot F_{tf} \cdot F_{pv} \cdot F_g \cdot Y \cdot F_{tb} \cdot F_a$ **Eq. 3-4**

$\text{lb/hr} = \rho \cdot \text{MF} \cdot \text{CNT}$ **Eq. 3-1**

$\text{gph} = C_{tl} \cdot C_{pl} \cdot \text{MF} \cdot \text{CNT}$ **Eq. 3-5**

$\text{lb/hr} = \sqrt{h_w} \cdot F_n\,(F_c + F_{sl}) \cdot \sqrt{\rho} \cdot 1.0618 \cdot F_a$ **Eq. 3-6**

$\text{gph} = \sqrt{h_w} \cdot F_n\,(F_c + F_{sl}) \cdot F_{gt} \cdot F_a$ **Eq. 3-7**

$\text{lb/hr} = \sqrt{h_w} \cdot F_n\,(F_c + F_{sl}) \cdot F_s \cdot Y \cdot F_a$ **Eq. 3-8**

Other Equations

$$F_{pb} = \frac{14.73}{P_b}$$

$$F_{tb} = \frac{460 + T_b}{520}$$

$$F_{tf} = \sqrt{\frac{520}{460 + T_f}}$$

$$F_g = \sqrt{\frac{1.0000}{G}} \qquad F_{gt} = \frac{1.0057}{\sqrt{G_1}}\sqrt{\frac{G_f}{G_1}}$$

(See Fig. 23-12 and 23-13 for G_f/G_1 conversions.)

$$Q = C'\sqrt{h_w \cdot P_f}$$

$$C' = F_n\,(F_c + F_{sl}) \cdot F_{pb} \cdot F_{tf} \cdot F_{pv} \cdot F_g \cdot Y \cdot F_{tb} \cdot F_a$$

$F_a = 1 + [0.0000185\,(T_f - T_{meas})]$ for 304/316 Stainless Steel

$$C_{pl} = \frac{1}{1 - (F \cdot D_p)}$$

$F_n\,(F_c + F_{sl}) = \text{Key} =$ orifice factor (Fig. 3-13)

FIG. 3-5

Orifice Plate Holders

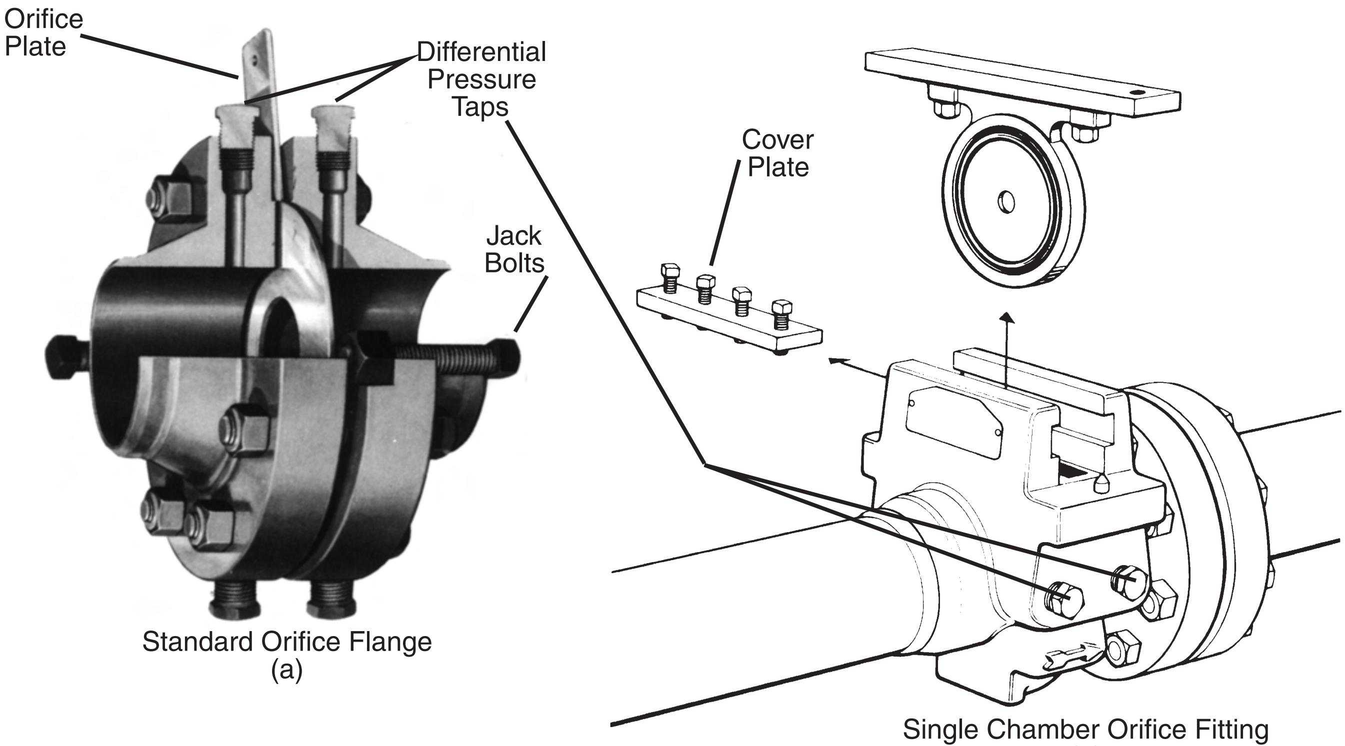

Standard Orifice Flange
(a)

Single Chamber Orifice Fitting
(b)

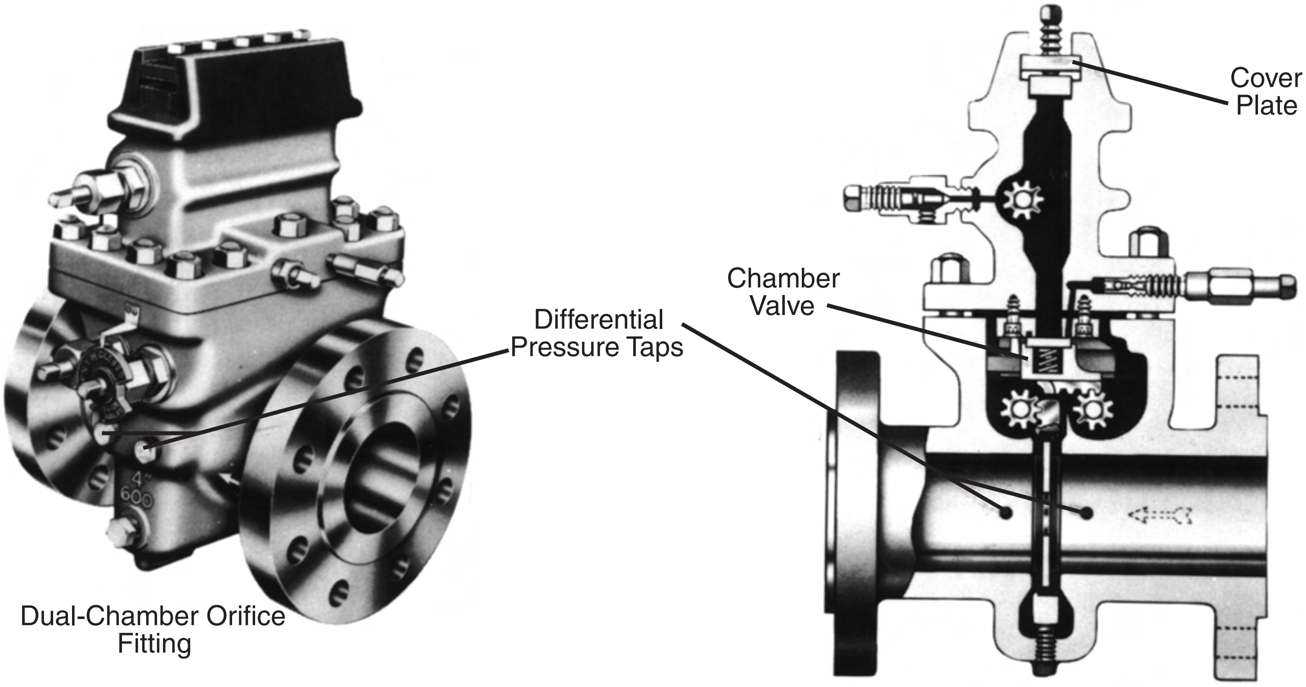

Dual-Chamber Orifice Fitting

Flanged Dual-Chamber
(c)

Side Sectional View

FIG. 3-6
Orifice Plate Thickness and Maximum Allowable Differential Pressure Based on the Structural Limit

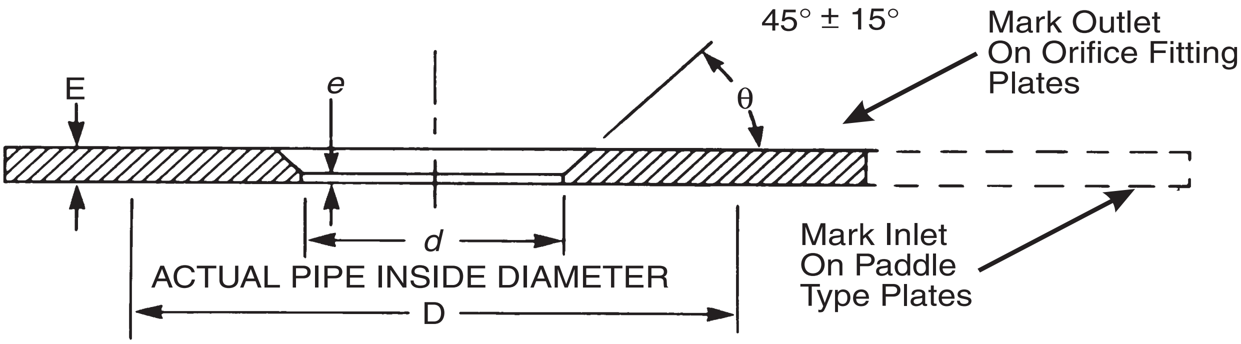

Nominal Pipe Size (NPS) (inches)	Published Inside Pipe Diameter (inches)	Orifice Plate Thickness E (inches)			Maximum Allowable ΔP(In. H_2O) Orifice Fitting	Maximum Allowable ΔP(In. H_2O) Orifice Flanges
		Minimum	Maximum	Recommended		
2	1.687	0.115	0.130	0.125	1000	1000
	1.939	0.115	0.130	0.125	1000	1000
	2.067	0.115	0.130	0.125	1000	1000
3	2.300	0.115	0.130	0.125	1000	1000
	2.624	0.115	0.130	0.125	1000	1000
	2.900	0.115	0.130	0.125	1000	1000
	3.068	0.115	0.130	0.125	1000	1000
4	3.152	0.115	0.130	0.125	1000	1000
	3.438	0.115	0.130	0.125	1000	1000
	3.826	0.115	0.130	0.125	1000	1000
	4.026	0.115	0.130	0.125	1000	1000
6	4.897	0.115	0.163	0.125	345	1000
	5.187	0.115	0.163	0.125	345	1000
	5.761	0.115	0.192	0.125	345	1000
	6.065	0.115	0.192	0.125	345	1000
8	7.625	0.115	0.254	0.250	1000	1000
	7.981	0.115	0.319	0.250	1000	1000
	8.071	0.115	0.319	0.250	1000	1000
10	9.562	0.115	0.319	0.250	570	1000
	10.020	0.115	0.319	0.250	570	1000
	10.136	0.115	0.319	0.250	570	1000
12	11.374	0.175	0.379	0.250	285	1000
	11.938	0.175	0.398	0.250	285	1000
	12.090	0.175	0.398	0.250	285	1000
16	14.688	0.175	0.490	0.375	465	1000
	15.000	0.175	0.500	0.375	465	1000

FIG. 3-6 (Cont'd.)

Orifice Plate Thickness and Maximum Allowable Differential Pressure Based on the Structural Limit

Nominal Pipe Size (NPS) (inches)	Published Inside Pipe Diameter (inches)	Orifice Plate Thickness E (inches)			Maximum Allowable ΔP(In. H_2O) Orifice Fitting	Maximum Allowable ΔP(In. H_2O) Orifice Flanges
		Minimum	Maximum	Recommended		
	15.025	0.175	0.500	0.375	465	1000
20	18.812	0.240	0.505	0.375	235	1000
	19.000	0.240	0.505	0.375	235	1000
	19.250	0.240	0.505	0.375	235	1000
24	22.624	0.240	0.505	0.500	360	1000
	23.000	0.240	0.562	0.500	360	1000
	23.250	0.240	0.562	0.500	360	1000
30	28.750	0.370	0.562	0.500	180	1000
	29.000	0.370	0.578	0.500	180	1000
	29.250	0.370	0.578	0.500	180	1000

Used by the permission of the copyright holder, American Gas Association.
Reproduced courtesy of the American Petroleum Institute.

FIG. 3-7

Allowable Variations in Pressure Tap Hole Location

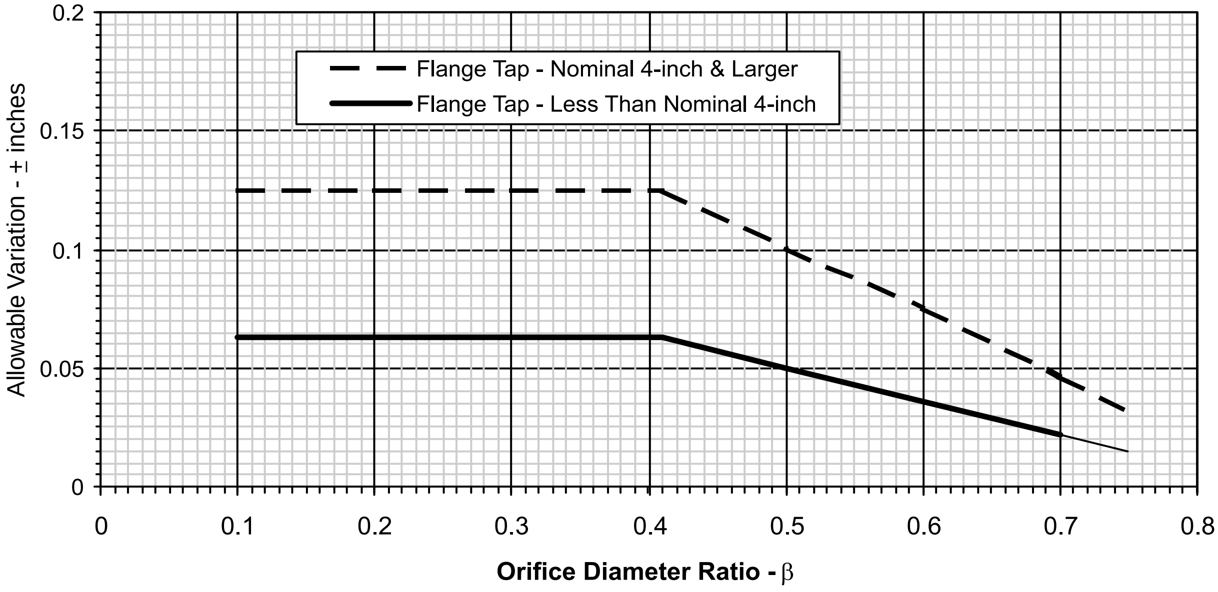

Tolerance specified for β ratio of 0.75 should be used in the design of new installations.
Used by the permission of the copyright holder, American Gas Association.
Reproduced courtesy of the American Petroleum Institute.

FIG. 3-8

Alternative Method for Determination of Orifice Plate Departure from Flatness (Departure from Flatness = $h_2 - h_1$)

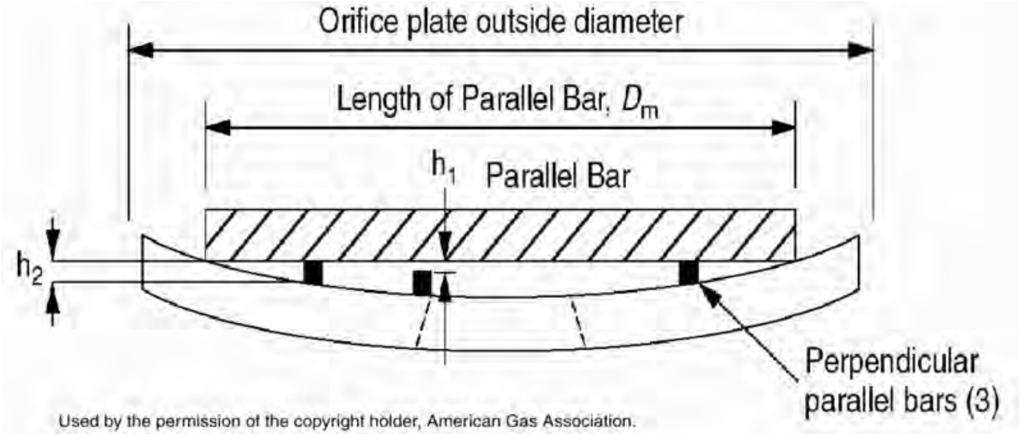

Used by the permission of the copyright holder, American Gas Association.
Reproduced courtesy of the American Petroleum Institute.

FIG. 3-9

Orifice Meter Tube Layout for Flanged or Welded Limit

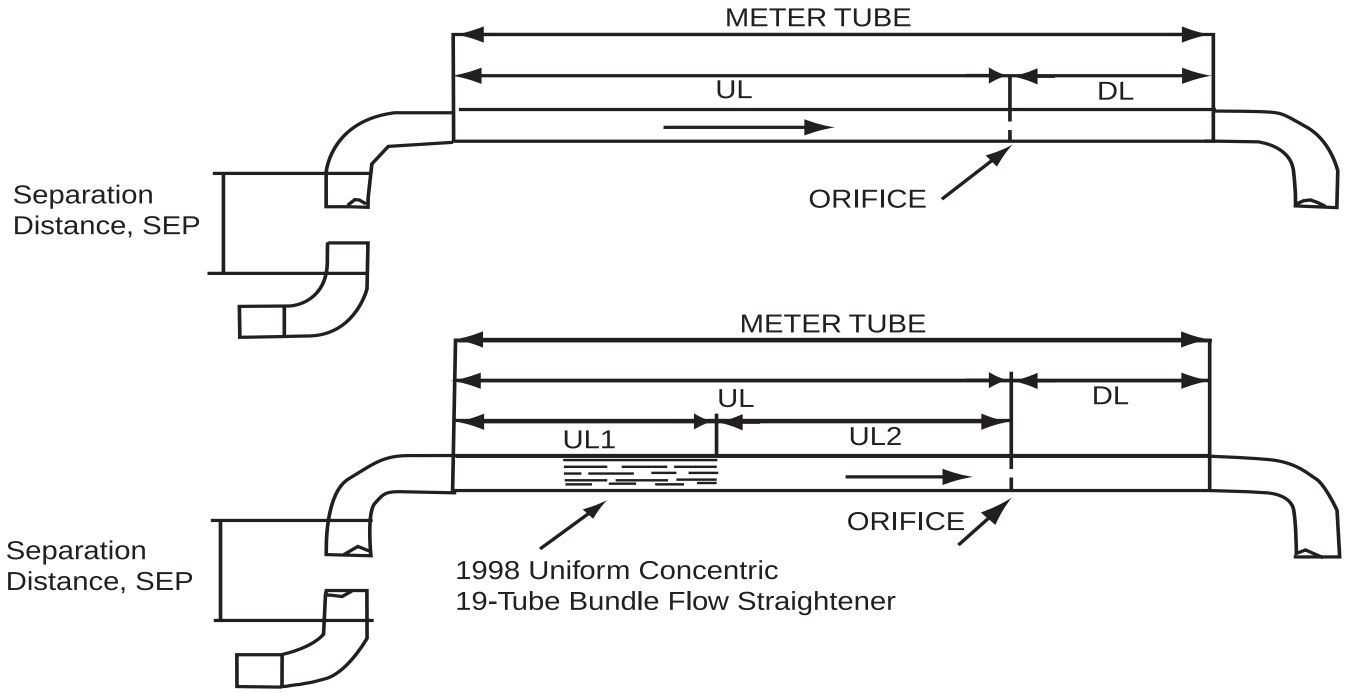

Used by the permission of the copyright holder, American Gas Association.
Reproduced courtesy of the American Petroleum Institute.

FIG. 3-10

Orifice Meter Installation Requirements without a Flow Conditioner

Minimum straight unobstructed meter tube length from the upstream and downstream side of the office plate (in multiples of published internal pipe diameter, D_I)

Diameter ratio β	a. Single 90° elbow. b. Two 90° elbows in the same plane with SEP > 30D_i. c. Two 90° elbows in perpendicular planes with SEP > 15D_i.	Two 90° elbows in the same plane "SEP" configuration spacer SEP ≤ 10D_i.	Two 90° elbows in the same plane "SEP" configuration 10 D_i < SEP ≤ 30D_i.	*Two 90° elbows in perpendicular planes, SEP < 5D_i.*	Two 90° elbows in perpendicular planes, 5D_i ≤ SEP ≤ 15D_i.	Single 90° Tee used as an elbow but not as a header element	a. Single 45° elbow. b. Two 45° elbows in the same "SEP" configuration SEP ≥ 22D_i.	Gate valve at least 50% open	Concentric reducer	Any other configuration (catch all category)*	Downstream meter tube length
	UL	**UL**	**UL**	**UL**	**UL**	**UL**	**UL**	**UL**	**UL**	**UL**	**DL**
	6	10	10	50	19	9	30	17	6	70	2.8
0.30	11	10	12	50	32	9	30	19	6	108	3.0
0.40	16	10	13	50	44	9	30	21	6	145	3.2
0.50	30	30	18	95	44	19	30	25	7	145	3.5
0.60	44	44	30	95	44	29	30	30	9	145	3.9
0.67	44	44	44	95	44	36	44	35	11	145	4.2
0.75	44	44	44	95	44	44	44	44	13	145	4.5
Recommended length for maximum range β ≤ 0.75	44	44	44	95	44	44	44	44	13	145	4.5

UL – Minimum meter tube length upstream of the orifice plate in internal pipe diameter, D_i (See Figure 3-9).Straight length shall be measured from the downstream end of the curved portion of the nearest (or only) elbow or of the tee or the downstream end of the conical portion of reducer or expander.

DL – Minimum downstream meter tube length in internal pipe diameters, D_i (See Figure 3-9).

SEP – Separation distance between piping elements in internal pipe diameter, D_i, measured from the downstream end of the curved portion of the upstream elbow to the upstream end of the curved portion of the downstream elbow.

Note : The tolerance on specified lengths for UL and DL is ± 0.25D_i.

* – This installation exhibits strong effect of Reynolds number and pipe roughness on the recommended length due to rate of decay of swirl. The present recommendations have been developed for high Reynolds numbers and smooth pipes to capture the worst case.

Used by the permission of the copyright holder, American Gas Association. Reproduced courtesy of the American Petroleum Institute.

FIG. 3-11

Orifice Meter Installation Requirements With 1998 Uniform Concentric 19-Tube Bundle Flow Straightener for Meter Tube Upstream Length of $17D_i \leq UL < 29D_i$.

Diameter Ratio, β	Single 90° elbow $R/D_i = 1.5$	Two 90° elbows out of plane $SEP \leq 2D_i$ $R/D_i = 1.5$	Single 90° Tee used as an elbow but not as a header element	Partially closed valves (at least 50% open)	High swirl combined with single 90° Tee	Any fitting (catch all category)	Downstream meter tube length
	UL2	UL2	**UL2**	**UL2**	**UL2**	**UL2**	**DL**
0.10	5-14.5	5-14.5	5-14.5	5-11	5-13	5-11.5	2.8
0.20	5-14.5	5-14.5	5-14.5	5-11	5-13	5-11.5	2.8
0.30	5-14.5	5-14.5	5-14.5	5-11	5-13	5-11.5	3.0
0.40	5-14.5	5-14.5	5-14.5	5-11	5-13	5-11.5	3.2
0.50	11.5-14.5	9.5-14.5	11-13	**	11-13	***	3.5
0.60	12-13	13.5-14.5	*	Not allowed	*	Not allowed	3.9
0.67	13	13-14.5	Not allowed	Not allowed	Not allowed	Not allowed	4.2
0.75	14	Not allowed	Not allowed	Not allowed	Not allowed	Not allowed	4.5
Recommended tube bundle location for max range of β	13 $\beta \leq 0.67$	**13.5-14.5** $\beta \leq 0.67$	13 $\beta \leq 0.54$	**9.5** $\beta \leq 0.47$	**13** $\beta \leq 0.54$	9.5 $\beta \leq 0.46$	4.5

NOTES:

Lengths shown under the UL2 column are the dimensions shown in Figure 3-9 expressed as the number of published internal pipe diameters (D_i) between the downstream end of the 1998 Uniform Concentric 19-Tube Bundle Flow Straightener and the upstream surface of the orifice plate.

* – $13D_i$ allowed for up to $\beta = 0.54$

** – $9.5D_i$ allowed for up to $\beta = 0.47$

*** – $9.5D_i$ allowed for up to $\beta = 0.46$

SEP – Separation distance between elbows measured as defined in Figure 3-10.

UL1 = UL - UL2

Note : The tolerance on specified lengths for UL, UL2 and DL is $0.25D_i$.

Not allowed means that it is not possible to find an acceptable location for the 1998 Uniform Concentric 19-Tube Bundle Flow Straightener downstream of the particular fitting for all values of UL

Used by the permission of the copyright holder, American Gas Association. Reproduced courtesy of the American Petroleum Institute.

FIG. 3-12
Orifice Meter Installation Requirements With 1998 Uniform Concentric 19-Tube Bundle Flow Straightener for Meter Tube Upstream Length of UL ≥ $29D_i$.

Diameter Ratio, β	Single 90° elbow $R/D_i = 1.5$	Two 90° elbows out of plane $SEP \le 2D_i$ $R/D_i = 1.5$	Single 90° Tee used as an elbow but not as a header element	Partially closed valves (at least 50% open)	High swirl combined with single 90° Tee	Any fitting (catch all category)	Downstream meter tube length
	UL2	**UL2**	**UL2**	**UL2**	**UL2**	**UL2**	**DL**
0.10	5-25	5-25	5-25	5-13	5-23	5-13	2.8
0.20	5-25	5-25	5-25	5-13	5-23	5-13	2.8
0.30	5-25	5-25	5-25	5-13	5-23	5-13	3.0
0.40	5-25	5-25	5-25	5-13	5-23	5-13	3.2
0.50	11.5-25	9-25	9-23	7.5-15	9-19.5	11.5-14.5	3.5
0.60	12-25	9-25	11-16	10-17	11-16	12-16	3.9
0.67	13-16.5	10-16	11-13	10-13	11-13	13	4.2
0.75	14-16.5	12-12.5	12-14	11-12.5	14	Not allowed	4.5
Recommended tube bundle location for max range of β	14-16.5 $\beta \le 0.75$	**12-12.5** $\beta \le 0.75$	**12-13** $\beta \le 0.75$	**11-12.5** $\beta \le 0.75$	**13** $\beta \le 0.75$	**13** $\beta \le 0.67$	4.5

NOTES:

Lengths shown under the UL2 column are the dimensions shown in Figure 3-9 and as defined in Figure 3-11.

SEP – Separation distance between elbows measured as defined in Figure 3-10.

UL1 = UL - UL2

Note: The tolerance on specified lengths for UL, UL2 and DL is ± $0.25D_i$.

Used by the permission of the copyright holder, American Gas Association. Reproduced courtesy of the American Petroleum Institute.

Gas Orifice Calculations

Orifice Sizing — A simple calculation is often needed to properly size an orifice plate for new or changing flow rates through existing meter tubes. The procedure uses an existing or assumed flow quantity, a desired differential pressure at a specific static pressure, an estimated flowing temperature, and a determined or assumed specific gravity. The Key orifice coefficient is calculated from the gas flow equation. This calculated value is then compared to Fig. 3-13, and the next larger size is usually selected.

Example 3-1 — Size an orifice plate in gas service.

Given Data:

Line Size, D = 4.026 in.
Flange Taps
Specific Gravity = 0.700
Flowing Temperature = 100°F
Flowing Pressure = 75 psia
Flow Rate = 14,200 cu ft/hr (14.73 psia, 60°F)
Desired Differential = 50 in. of water

To determine the approximate orifice size required, the corresponding Key_g (natural gas) is calculated using appropriate terms of Eq 3-4;

$$Q_h = \text{Key}_g \cdot F_{tf} \cdot F_g \cdot \sqrt{h_w \cdot P_f} \qquad \text{from Eq 3-4}$$

Rearranging,

$$\text{Key}_g = \frac{Q_h}{F_{tf} \cdot F_g \cdot \sqrt{h_w \cdot P_f}} \qquad \textbf{Eq 3-11}$$

$$\text{Key}_g = \frac{14{,}200}{0.9636\ (1.1952)\ \sqrt{50 \cdot 75}}$$

$$\text{Key}_g = 201.342$$

Referring to Key_g (Fig. 3-13) for a 4.026 inch line with flange taps, access the Key_g value which approximates the calculated number. A 1.000 in. orifice size would be selected which has a Key value of 201. More precise calculations would include other corrections. For more precise custody transfer calculations, please refer to API Chapter 14.3 (AGA Report No. 3).

Orifice Flow Rate — The following example illustrates a calculation of flow rate through an orifice.

Example 3-2 — Calculate an approximate flow rate for the orifice using appropriate terms from Eq 3-4.

Given Data:

Line Size, D = 6.065 in.
Orifice Size, d = 3.500 in.
Flange Taps
Flowing Temperature = 70°F
Flowing Pressure = 90 psia
Differential = 60 in. of water
Specific Gravity = 0.750

From Fig. 3-3,

$$Q_h = \text{Key}_g \cdot F_{tf} \cdot F_g \cdot \sqrt{h_w \cdot P_f} \qquad \text{from Eq 3-4}$$

$$Q_h = 2646\ (0.9905)\ (1.1547)\ \sqrt{60 \cdot 90}$$

$$Q_h = 222{,}387\ \text{cu ft/hr @ 14.73 psia and 60°F}$$

More precise calculations would include other corrections.

For more precise custody transfer calculations, please refer to API Chapter 14.3 (AGA Report No. 3).

Orifice Well Test

Often it is necessary to determine an approximate flow quantity from a well head or field separator vent to the atmosphere for test purposes. The use of a "well head tester" has been a common practice since the early days of the oil and gas industry. See Figure 3-14. An orifice is installed between a pair of flanges, at the outlet of a pipe nipple which is at least eight pipe diameters long. The square edge of the orifice faces the flow. The diameter of the pipe nipple should not be greater than the preceding fittings. The pressure connection may be made in the upstream flange or at any point in the pipe nipple within three diameters from the orifice. The pressure differential across the orifice is the difference between the upstream pressure and atmospheric pressure.

An approximate flow rate may be calculated from:

$$Q = 16{,}330\ (1 + \beta^4)\ (d^2)\ \sqrt{H\ (29.32 + 0.3H)} \cdot F_{tf} \cdot C_g \qquad \textbf{Eq 3-12}$$

For conditions other than 60°F (flowing) and G of 0.6, correction factors must be applied.

$$F_{tf} = \sqrt{\frac{520}{460 + T_f}} \qquad \textbf{Eq 3-13}$$

$$C_g = \sqrt{\frac{0.60}{G}} \qquad \textbf{Eq 3-14}$$

Example 3-3 — Calculate the daily gas flow through a 1-inch orifice in a nominal 3-inch pipe. The gas gravity is 0.70, the flowing temperature is 60°F, and the pressure upstream of the orifice is 5 inches Hg. The published ID of a 3-inch pipe is 3.068 in.

$$Q = 16{,}330 \left[1 + \left(\frac{1.0}{3.068}\right)^4\right] (1.0)^2 \sqrt{5\ [29.32 + (0.3)\ (5)]}$$

$$\cdot\ 1.000 \cdot 0.9258 = 190{,}000\ \text{std cu ft per day}$$

Ultrasonic Measurement

This section gives a short overview of ultrasonic meters. If meter design and custody quality calculations are required, please refer to American Gas Association Report #9. These meters are designed for measurement of single-phase fluid only.

An ultrasonic meter (UM) is a fluid velocity-sensing device. (See Figure 3-15) The flowing gas velocity is determined by the transit times of high frequency pulses between two matched transducers. One is designated as upstream and one as downstream due to the position in the meter and the direction of flow. These transducers attach into the pipe wall but do not protrude into the gas stream, thus creating a zero pressure drop. There are simple, single path meters that consist of one pair of transducers and multi-path meters with three or more pairs of transducers. Each pair of transducers measures the transit time of each sound pulse transmitted from the up-

FIG. 3-13

Plate Sizing and Approximate Flowrate, Natural Gas, Natural Gas Liquids and Steam (For Flange Taps)

Plate ID Inches	KEY								Plate ID Inches
	Nominal Meter Tube ID (Inches)								
	2	3	4	6	8	10	12	16	
0.25	13								0.25
0.50	50	50							0.50
0.75	115	113	113						0.75
1.00	210	202	201	200					1.00
1.25	347	320	315	313	313				1.25
1.50	557	471	457	452	451	451			1.50
1.75		663	630	617	615	614			1.75
2.00		911	836	809	804	802	801		2.00
2.25			1084	1029	1019	1016	1015		2.25
2.50			1382	1280	1262	1256	1254	1252	2.50
2.75			1746	1563	1532	1522	1518	1516	2.75
3.00				1882	1830	1815	1809	1805	3.00
3.25				2241	2159	2135	2126	2120	3.25
3.50				2646	2519	2483	2469	2460	3.50
3.75				3104	2914	2860	2839	2827	3.75
4.00				3627	3345	3267	3237	3219	4.00
4.25				4227	3816	3705	3664	3639	4.25
4.50					4330	4176	4119	4085	4.50
4.75					4894	4682	4604	4558	4.75
5.00					5513	5226	5120	5059	5.00
5.25					6195	5809	5669	5588	5.25
5.50					6949	6434	6251	6146	5.50
5.75						7107	6869	6734	5.75
6.00						7830	7524	7351	6.00
6.25						8609	8220	8001	6.25
6.50						9451	8957	8682	6.50
6.75						10362	9739	9397	6.75
7.00						11351	10570	10147	7.00
7.25							11453	10933	7.25
7.50							12393	11756	7.50
7.75							13394	12620	7.75
8.00							14463	13524	8.00
8.25							15606	14473	8.25
8.50								15468	8.50
8.75								16511	8.75
9.00								17607	9.00
9.25								18758	9.25
9.50								19968	9.50
9.75								21242	9.75
10.00								22584	10.00
10.25								23999	10.25
10.50								25495	10.50

Definitions and Equations:	**Calculations:**		
	Gas	**Liquid**	**Steam**
D = Nominal diameter of Meter Tube in inches.	8	8	8
Q_h = Desired Flow in Cubic Feet per Hour at Base Conditions.	620000		
Q_{mh} = Desired Flow in Pounds per Hour		140000	1700000
h_w = Desired Differential in Inches of Water.	50	50	50
P_f = Flowing Pressure in psia.	370		250
ρ_f = Flowing Density in Pounds per Cubic Foot.		31.2276	
G = Gas Specific Gravity	0.570		
$KEY_g = (h_w \bullet P_f / G)^{0.5}$	180.156		
$KEY_l = 1.06 \bullet (h_w \bullet \rho_f)^{0.5}$		41.885	
$KEY_s = 4.47 \bullet (h_w \bullet P_f)^{0.5}$			499.761
Table Entry = Desired Flow Divided by Key.	3441	3342	3402
Select Plate Size From Table	4.00	4.00	4.00
Table Entry For Selected Plate Size	3345	3345	3345
Approximate Flow = Table Value (For Selected Plate Size) x KEY	602621	140106	1671701

FIG. 3-14

Typical Test Set-Up for Measuring Gas from a Separator Vent

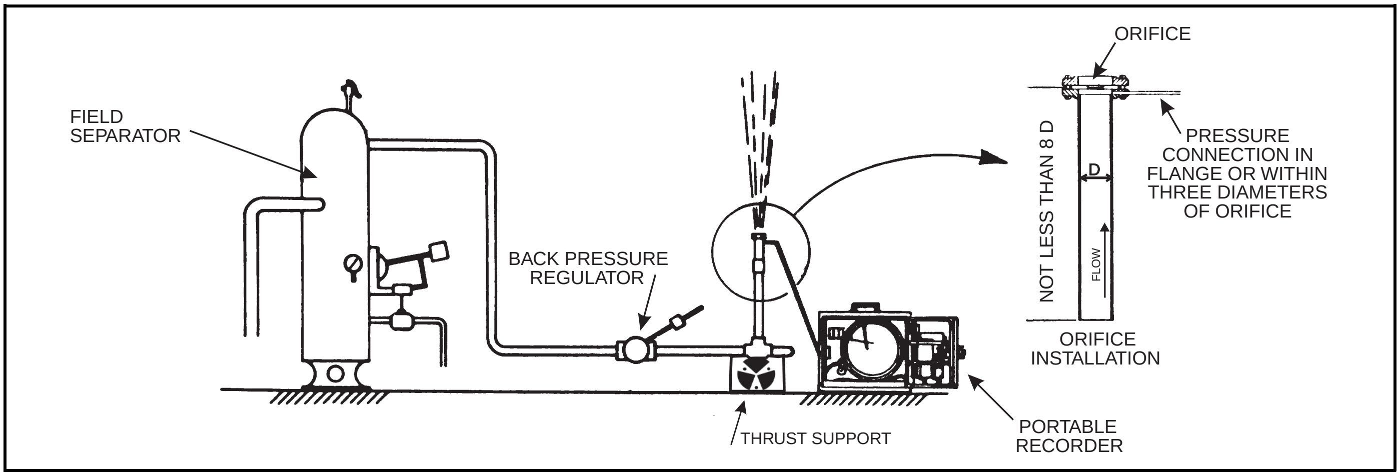

stream transducer to the downstream transducer with the flow (t1), and from the downstream to the upstream transducers against the flow (t2). The transit time for a signal traveling with the gas flow is less than travel time against the gas flow. The difference in these transit times relates to the gas velocity along that specific path. Manufacturers intentionally produce a time delay between pulses to insure no interference occurs between the series of pulses. Various calculations and methodologies are then used to calculate the average gas velocity and flow rate at line conditions.

A single path meter monitors only one path's mean velocity at one elevation in the gas flow. Since most gas flow is not fully symmetrical, the use of a single path UM would have inaccuracies dependent on the flow velocity profile. Single path meters are generally used for operational balancing and flare measurement and **are generally not accepted for custody transfer measurement.**

A multi-path UM continuously monitors three or more mean velocities at different elevations in the gas stream of the metered area. The averages of these mean velocities are used to calculate the gas flow rate. Meter designs of various meter manufactures are able to minimize the effect of non-symmetrical flow profiles on the overall meter accuracy.

It is recommended that UM's with three or more paths be used for custody measurement (based on available data).

Volume calculations

Once the actual cubic feet (acf) is calculated by the SPU or flow computer, AGA Report #7 calculations are used to calculate standard cubic feet (Eq. 3.2).

UM Meter Tube and Approach Piping Considerations

The upstream and downstream lengths of the meter tube should be designed in accordance with manufacturer's requirements and AGA Report #9. The approach piping configuration upstream of the meter run can induce asymmetric flow profile distortions that may exist up to 100 pipe diameters downstream of the disturbance. It is a good practice to always design the approach piping to eliminate close-coupled 90º angles out of plane, headers and high pressure drops near the inlet to any UM. These are the common contributors to swirl. Tests conducted at the Southwest Research Institute under the sponsorship of GTI indicate that the failure to use a flow conditioner could produce significantly variable results. If the meter is intended for custody transfer, a flow calibration using a properly certified lab should be performed. The calibration must be performed using the actual UM and its related flow conditioning equipment and meter run assembly.

Although it's always a good practice to install flow conditioners, it is especially important if the approach piping lengths are limited and flow disturbances will be present upstream of the run. There are various manufacturers and designs of flow conditioners. Always consult the manufacturers of both the flow conditioner and the meter and build the spool pieces immediately upstream and downstream of the conditioner to meet the manufactures' and AGA Report #9 specifications. API Chapter 14.3 flow conditioner requirements may be used as a reference for designing and verifying flow conditioning systems and ensuring they effective.

The spool piece immediately downstream of the meter should be built to a length to accommodate the desired number of monitoring points downstream of the meter. The first of these points should be a minimum of 2 pipe diameters downstream of the UM. These monitoring points normally consist of a sample probe, thermal well, test well, etc. The sample probe shall be located in the first monitoring point. The ther-

FIG. 3-15

Ultrasonic Flow Meter

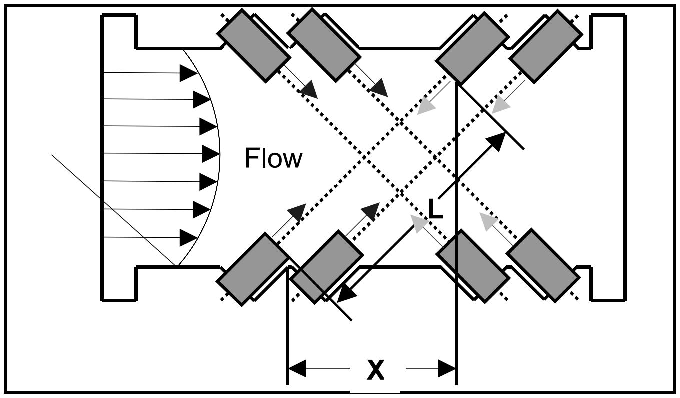

mal well must be located between 2 and 5 pipe diameters downstream of the UM. The pressure tap can be located on the meter or up to 5 pipe diameters downstream of the meter. (See AGA report #9.)

If the meter is used for bi-directional flow measurement, upstream piping configuration should be used on both ends of the meter.

If the measured gas stream contains contaminates such as, but not limited to, dirt, paraffin, condensate, water, rust, compressor oil, etc., a separator or filter may be considered for installation immediately upstream of the measurement facility.

If a control valve or pressure regulating device is installed up or downstream of the UM, consideration should be taken to reduce or eliminate the amount of ultrasonic noise created by these devices under conditions that could effect measurement accuracy. Ultrasonic noises created by these devices may distort or overpower the ultrasonic signal of the meter, creating a complete loss of signal or a diminished accuracy level. If these noisy conditions exist, consult the meter manufacture for possible solutions. Proper piping system design can isolate the UM from ultrasonic noise sources to some extent. For example, since ultrasonic noise does not change direction readily, installing tees in the line with one branch capped and the other open to flow will significantly reduce the transmission of ultrasonic noise downstream. When such a design is used, be sure to consider the potential for erosion if the flowing velocity impacting the tee is high. Also, be sure the flow conditioning system is able to eliminate any swirl or severe turbulence generated by such piping, before the flow reaches the UM.

Calibration of the UM

The initial calibration of the UM is normally the dry calibration. Dry calibration insures that the proper calibration parameters were entered into the meter electronics and all components are operating correctly. Dry calibration entails blinding both ends of the meter and filling the meter body with a known gas (normally nitrogen). Using a known gas, the VOS is calculated and compared to the measured VOS from the meter. The transit times from upstream and downstream transducers will be the same, since the meter is in a no flow condition. The accurate measurement of the VOS in the test within certain limits can generally guarantee a given accuracy.

Dry calibrations usually insure the minimum meter accuracy of +/- 1.0%. If accuracy levels better than +/- 1.0% are desired, the meter should be flow calibrated at a flow lab. The flow calibration should be performed at a lab that has the flowing capacity to verify the meter up to 100% of the meter's flowing capacity. Six to ten velocities representative of the meter's range should be verified in the calibration process. The average of these verifications may be used for a composite meter factor if the meter is linear within the stated tolerances over the expected normal operating range of the meter, or an algorithm can be written to correct the metered volume that correspond to the adjustments required over the calibrated flow range.

If the meter is intended for custody transfer measurement, a flow calibration should be performed. This flow calibration shall meet or exceed the requirements stated in AGA Report #9.

Calibration of the pressure and temperature sensing devices is critical and should be calibrated to meet the requirements of API MPMS Chapter 21 Section 2.

UM Meter Maintenance and Verification

If a meter is flow calibrated, log files should be collected at various flow rates during the flow calibration. The manufactures should supply software that can be used for the collection of these logs. These logs can be used as a "baseline" to compare with future data. This is extremely valuable as a diagnostic tool and can be useful in determining if a meter is beginning to experience electronic problems, transducer problems, or pipe wall contamination.

Another method of meter verification is the VOS check. If the gas composition is known, the VOS at operating conditions can be calculated using third party software. This calculated VOS can be compared to the measured VOS at operating conditions to verify the meter's accuracy.

UM manufacturers currently offer software packages that help establish the meter's performance and enable the user to verify the meter's performance throughout the meter's history. Training on these software packages and procedures should be sought out from the meter manufacturer.

LIQUID MEASUREMENT

Volumetric Measurement Meters (Orifice Meters)

Liquid volume measurement by an orifice meter can be determined by following the guidelines established in API Chapter 14.8. As with gas measurement, the primary element should consist of an orifice plate, the orifice holder with it's associated tap holes to sense the differential and static pressure, and the upstream and downstream piping "meter tube". The differential and static pressure readings are sensed at the flange taps by a secondary element sensor or transducer. The temperature of the fluid should also be recorded by the temperature sensor or transducer. Note that the meter is the tertiary device that records the output of the sensors/transducers.

The Reader-Harris, Gallagher equation used with orifice meters produces discharge coefficients accurate within +/- 0.5%. Measurement using orifice meters must include this uncertainty, as well as the uncertainty in the metering equipment, unless the metering system is proven against a traceable standard (see API Chapter 4), similar to the way turbine meters and PD meters are typically proven. Then the overall system uncertainty may be reduced to +/- 0.25%.

Some fluid physical properties also need to be known. Examples may include density, viscosity, and compressibility to accurately determine volume using the AGA Report #3 method. For systems performing custody transfer mass measurement for light hydrocarbons such as ethane, ethylene, E/P Mix, high ethane raw mix NGLs, etc., the flowing density of the stream should be measured with a density meter. Then the mass of the delivery may be determined by multiplying the volume at flowing conditions from the meter/ELM, times the density of the flowing stream from the density meter. Details of this method can be found in API Chapters 14.4, 14.6, 14.7, 14.8 and 21.2.

A calculation routine to calculate *approximate* volumes of liquids by orifice meter is included in the Excel spreadsheet located on the diskette on the inside cover of this book or on the CD version of the book.

Example 3-4 — Calculate an approximate orifice size for the given flow rate and line size.

Line Size, D = 3.068 in.
Flange Taps
Specific Gravity at 60°F = 0.690
Flowing Temperature = 40°F
Flow Rate = 3400 gal. per hr
Desired Differential = 50 in. of water

To determine the approximate orifice size required, the corresponding Key_l is calculated using appropriate terms of Eq 3-7.

$$Q_h = \text{Key}_l \bullet F_{gt} \bullet \sqrt{h_w}$$

$$\text{or} \quad \text{Key}_l = \frac{Q_h}{F_{gt} \bullet \sqrt{h_w}} \qquad \text{From Eq 3-7}$$

$$= \frac{3400}{1.2193 \bullet \sqrt{50}} = 394.35$$

Referring to the Key values (Fig. 3-13) for a 3.068 inch line with flange taps, access the value listed which approximates the calculated Key_l. A 1.5 inch orifice diameter would be selected, which has a 471 Key_l value.

Orifice Flow Rate — The liquid flow rate through an orifice is calculated using the appropriate equation in Fig. 3-4. The initial calculation can be completed using only the Key_l and the F_{gt} correction factors to solve for Q_h since those factors are most significant.

Example 3-5 — Calculate a liquid flowrate for the given orifice setting.

Line Size, D = 8.071 in.
Orifice Size, d = 4.000 in.
Flange Taps
Specific Gravity at 60°F = 0.630
Flowing Temperature = 80°F
Differential = 36 in. of water

To determine the flowrate from Fig. 3-4,

$$Q_h = \text{Key}_l \bullet F_{gt} \bullet \sqrt{hw} \qquad \text{From Eq 3-7}$$

The value of Key_l from Fig. 3-13 is 3345 for an 8.071 in. line with a 4.0 in. orifice. The value of F_{gt} is calculated from the Fig. 3-4 equation.

Therefore,

$$Q_h = 3345 \bullet 1.2560 \bullet \sqrt{36} = 25{,}208 \text{ gal/hr}$$

For more precise calculations, refer to Chapter 14.8 of the API Manual of Petroleum Measurement Standards.

Turbine Meters

Turbine meters are velocity-sensing devices. The direction of flow through the meter is parallel to a turbine's rotary axis and the speed of rotation of the rotor is proportional to the rate of flow.

The turbine meter normally consists of one moving part; an impeller held in place by high pressure, low drag bearings. A magnetic transducer mounted in the meter body is used to count revolutions as the flow passes. The pulses from the transducer are determined for a known volume passing through the meter to develop a factor in pulses per gallon, or other desired unit volume. Turbine meter components are shown in Fig. 3-16. Expected accuracies of plus or minus 0.25% can be attained by certain turbine meters where proper stream conditions are maintained and the meter is properly installed and proven.

Doing mass measurement with turbine meters is often preferred where conditions in temperature, pressure, intermolecular adhesion and solution mixing present difficulty in converting volumes from flowing conditions to standard conditions, such as with ethane, natural gas liquids (NGL), or ethane-propane mixes. To do this properly an online densitometer needs to be used. Refer to GPA 8182 or API Chapter 14, Section 7 (14.7) for further details on mass measurement for NGLs.

Positive Displacement Meters

Displacement meters take a physically enclosed volume of fluid and move it from upstream to downstream of the metering point. The sum of these operations is an indication of the amount of liquid, which is moved over a period of time.

An expected accuracy of 0.25% for a positive displacement (PD) meter can be attained when it is properly installed and proven. Application is normally limited to those fluids that exhibit some lubricating properties because of the multiple moving parts of a positive displacement meter. Typical applications are butane and heavier products since ethane and propane have minimal lubricating properties. Fig. 3-17 shows some internal details of a positive displacement meter. PD meters may perform mass or volumetric measurement, depending on their configuration and companion equipment.

Turbine and Positive Displacement Meter Selection and Performance

Turbine and positive displacement meter installations should include the following considerations:

- Application to proper flow ranges
- Upstream strainers to protect meter internals from foreign material
- Pulsation and vibration
- Proper upstream flow conditioning
- Significant rate changes
- Changes in flow temperature, pressure, and density
- Back pressure (2 times DP across meter plus 1.25 times equilibrium vapor pressure is minimum recommended)
- Connections to prove the meter
- Verification that C_{tl} and C_{pl} will not be applied when the meters are performing mass measurement, except during provings.

The normally acceptable performance of a turbine or positive displacement meter will result in a change in the pulse count of less than 0.05% between meter prover runs, and less than 0.25% between provings. If the factor changes more than 0.25% between provings:

- meter maintenance may be required
- a total flow adjustment must be made

If the factor changes more than 0.5% between provings:

- the turbine must be pulled and inspected for damage or wear
- a total flow adjustment must be made

- the turbine must be proven again following inspection

More details about turbine and positive displacement meter installations, operation, and proving are available in Chapters 4, 5, 6, and 12 of the API Manual of Petroleum Measurement Standards.

Mass Measurement Meters

Mass measurement of a flowing fluid is advantageous where the physical properties of the fluid are not well defined or available. Mass measurement is especially important in measuring streams containing ethane and methane because of substantial solution mixing effects. Mass measurement is accomplished by multiplying the volume of the fluid at flowing conditions, over a defined period of time, by the density of the fluid at flowing conditions during that same time. This procedure eliminates the need for the correction factors (C_{tl} and C_{pl}) for the metered volume. The total stream mass can be converted into pure components by using a weight analysis of the fluid. Refer to GPA 8182 or API Chapter 14, Section 7 (14.7) for futher details on mass measurement for NGLs.

An example of converting stream mass to pure components is illustrated in Fig. 3-18. Be sure to use the most current version of GPA 2145 for conversion factors.

Several more different techniques and processes have been developed to directly measure the mass of a flowing fluid. The devices utilize the principle that angular momentum of a mass is directly proportional to the mass velocity. The resistance of a mass to change direction is measured by different types of devices using combinations of sensitive mechanical and electrical sensors and transmitters that can result in a variety of electronic signals. Mass flow meter installations may not require upstream and downstream piping usually associated with other types of measurement. Proving mass flow meters may involve a complicated arrangement of flow and density measuring equipment, or access to an alternate proving station, or use of a master mass meter comparison.

Coriolis Meters

The Coriolis meter is a mass-measuring device. It consists of a sensor, a transmitter and peripheral devices to provide monitoring, alarm, and/or control functions.

FIG. 3-16

Typical Turbine Meter Components

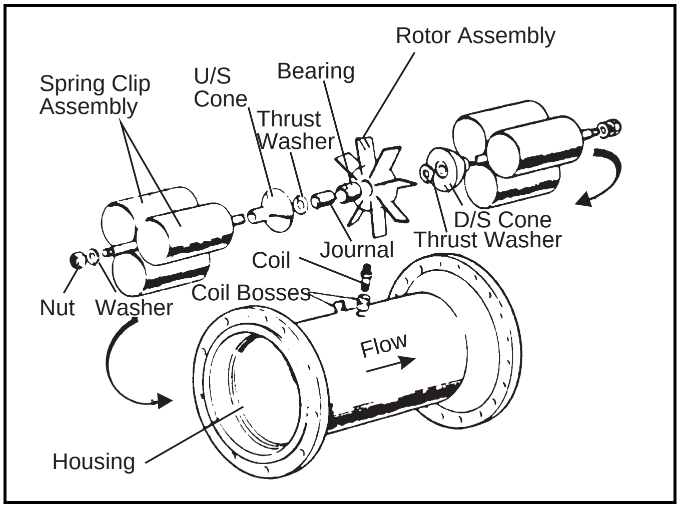

The sensor consists of two flow tube(s), the *drive* coil and magnet, two *pick-off* coils and magnets and the RTD. During operation, process fluid entering the sensor is split, half passing through each flow tube. The drive coil is energized causing the tubes to oscillate up and down in opposition to one another.

The *pick-off* coils are mounted on one tube while the magnets are mounted on the other. Each coil moves through the uniform magnetic field of the adjacent magnet as the two tubes move. The voltage generated from each pickoff coil creates a sine wave representing the motion of one tube relative to the other. When there is no flow, the two sine waves produced are in phase. When there is flow, the induced Coriolis force causes the tubes to twist, resulting in two out-of-phase sine waves. The time difference in the sine waves is directly proportional to the mass flow rate through the tubes (this may only be true at a fixed pressure).

The density of the fluid is calculated from the frequency of oscillation of the tubes.

The transmitter provides three actions. First, it sends a pulsed current to the sensor drive coil causing the flow tubes to vibrate. Second, it processes the sensor input signals, performs calculations, and produces various outputs to peripheral devices. Most commonly, the output of the meter is a pulsed

FIG. 3-17

Example Positive Displacement Meter

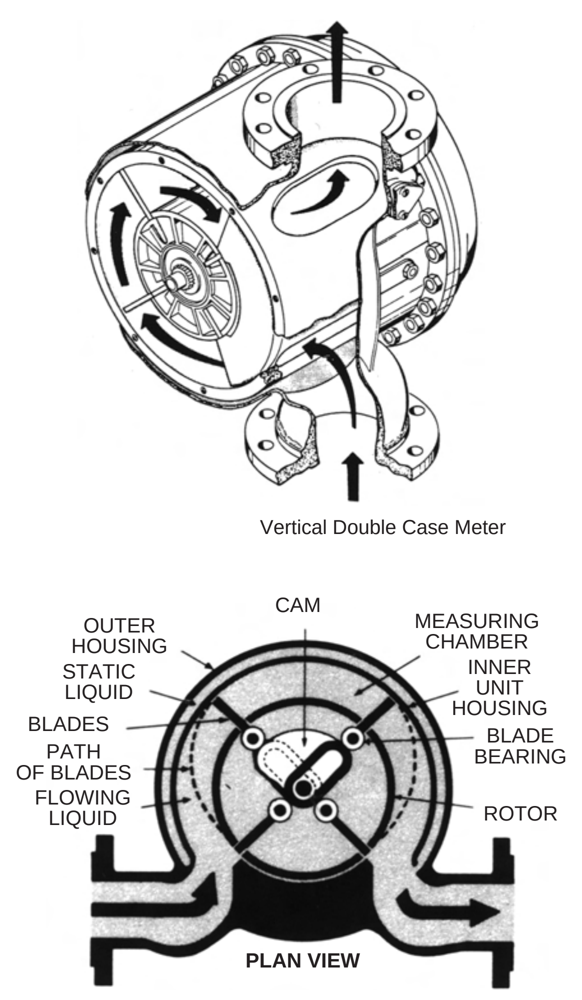

output. Third, it allows communication with an operator or control system. Figure 3-19 shows the components of a Coriolis meter.

Detail description of how a Coriolis meter operates can be found in appendix A of the API Coriolis Liquid Measurement Draft Standards.

When configuring the meter, users should provide some means to block in the flow so the zero flow condition can be verified. Zero verification of the meter is required from time to time as part of the normal operating procedures. Zeroing is necessary when the zero offset has shifted outside the defined limits. Since the meter should be proven after each zero, unnecessary zeroing should be avoided to minimize potential errors associated with meter factor reproducibility.

The Coriolis meter should be proven under conditions as close to normal operating conditions as practical. The result of a meter proving will be a new or reaffirmed meter factor (MF). This meter factor may be entered in accessory equipment, the Coriolis transmitter, or applied manually to the quantity indicated. The preferred method is to input the meter factor into the accessory equipment due to its audit trail capabilities. A Coriolis meter is normally set up with calibration factors from the manufacturer. These factors, although adjustable, should not be changed. Figure 3-20 shows a typical schematic of a Coriolis meter installation. For more information on Coriolis meter, please refer to the API draft standard, Measurement of Single-phase Intermediate and Finished Hydrocarbon Fluids by Coriolis Meters.

The Coriolis meter has gained popularity in recent years as it presents a number of advantages over other types of meters. A Coriolis meter has an accuracy range of (+/-0.1%) and acceptable repeatability. It provides multi-variable measurement in one device: mass flow rate, volumetric flow rate, density and temperature. It is very tolerant of the changes in the fluid quality and flow rate. It may also be used as a bi-directional meter. Ease of installation and low maintenance are other bonuses as there are no special mounting, no flow conditioning, no straight pipe run requirements and no moving parts.

Like all other types of meters, the Coriolis meter has its own down side. There is a significant pressure drop across the meter making it unsuitable for an existing operation where additional pressure drop cannot be tolerated.

Density Measurement

Densitometer — A densitometer measures density (mass/unit volume) of a fluid. In a vibrating densitometer (Fig. 3-21), a drive coil forces a tube to vibrate at some natural frequency, which is a function of the tube's mass per unit length.

As a fluid flows through the tube, the resonant frequency varies with the density of the fluid. A buoyant force densitometer (Fig. 3-22) operates on the principle that buoyant forces acting on a floating body are a function of the fluid surrounding the body. A float surrounded by fluid is attached to a beam suspended on a pivot. As the density of the fluid changes, the buoyant force provides an angular displacement around the pivot point, which is proportional to the density change. The displacement is picked up and transmitted electronically. A densitometer installed to record flowing density should be installed close to the pipeline and all connections and parts insulated. A densitometer in flowing service can be proven with an auxiliary pycnometer. Refer to Chapter 14.6 of the API Manual of Petroleum Measurement Standards for more details on installation and calibration of density meters. Note that 14.6 will become part of 9.4 in the future.

Meter Proving

The purpose of proving a turbine or PD meter is to establish a factor which, when multiplied by the meter pulses and divided by the nominal K-factor, will give an accurate, corrected metered volume. Compensation for meter factors can be accomplished external to the meter through either mathematical or electronic means. The meter factor may be defined as a number, which corrects meter registration to actual volume. A meter factor (MF) is applicable to only one set of operating conditions. To establish a meter factor, the meter must be compared to a known prover volume. By applying the necessary temperature and pressure factors to the prover volume and by dividing by the change in the meter reading, a meter factor is established.

FIG. 3-18

Example Calculation Converting Stream Mass to Component Gallons

Total Pounds of Stream = Metered Gallons (Meter Factor) (Recorded Actual Flowing Density lb/gal.) (Density Factor)
= 65,994 (1.004) (4.227) (1.002)
= 280,633 Pounds

Component	Analysis Mol %	Molecular Weight*	lb/mol of Mixture	Weight %	Pounds per Component	lb/gal. (wt. in vacuum)*	Component Gallons
Carbon Dioxide	4.40	44.010	1.936	4.34	12,180	6.8534	1,777
Methane	1.10	16.042	.176	.39	1,094	2.5	438
Ethane	41.57	30.069	12.500	28.00	78,577	2.9716	26,443
Propane	28.31	44.096	12.484	27.97	78,493	4.2301	18,556
Isobutane	8.01	58.122	4.656	10.43	29,270	4.6934	6,236
Normal Butane	5.93	58.122	3.447	7.72	21,665	4.8696	4,449
Pentanes Plus	10.68	88.394	9.440	21.15	59,354	5.548	10,698
Totals	100.00			100.00	280,633		68,597

*Use values from GPA 2145 – Latest Edition.

FIG. 3-19
Components of a Coriolis Meter

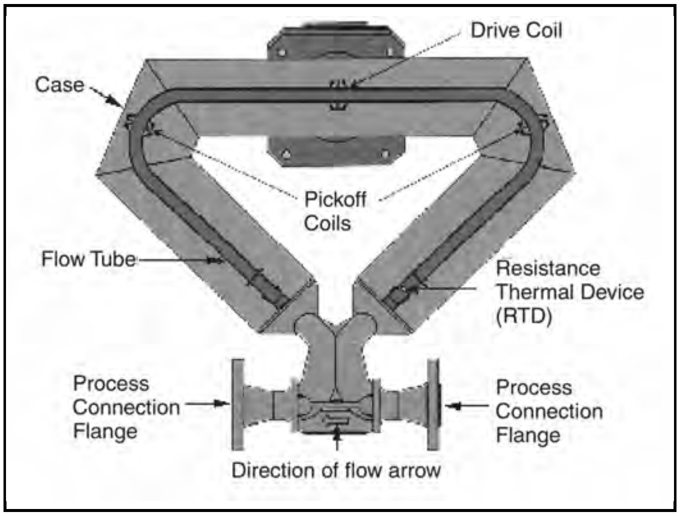

$$MF = \frac{\text{Volume of liquid in the prover corrected to standard conditions}}{\text{Change in meter reading corrected to standard conditions}} \qquad \textbf{Eq. 3-15}$$

Standard conditions in liquid measurement are 60°F and the equilibrium vapor pressure of the liquid at 60°F (or atmospheric pressure for liquids with a vapor pressure of less than 0 psig).

Meter Proving Systems — Meter proving systems should include the following considerations:

- All proving vessels should be calibrated by qualified personnel using test measures certified by the U.S. Bureau of Standards and be issued a "Certificate of Calibration."
- All meter proving systems should be equipped with a thermometer and pressure gauge located near the meter.
- Proving vessels shall have pressure gauges and thermometers on the inlet and outlet. Gauges and thermometers should be checked periodically against a deadweight tester and certified thermometer to verify accuracy.
- All valves in the proving systems, which affect the accuracy of the proving, should provide for observation of valve integrity, e.g., double block and bleed valves.
- Proving conditions should approximate operating conditions.

Additional information concerning meter proving can be found in Chapter 4 of the API Manual of Petroleum Measurement Standards.

Meter Proving Reports — A meter proving report is the record of a meter proving and must be completed to calculate the net volume being measured by the meter being proven. A meter proving report may contain considerable information but the following information is usually considered the minimum necessary to identify the proving and allow calculation of net volumes: proving report number, date and time, meter owner, company of person responsible for proving fluid used, fluid specific gravity, fluid vapor pressure (at operating temperature), meter size, totalizer pulses, prover size, pulses per unit volume, uncorrected prover volume, temperature of fluid at meter and prover, pressure of fluid at meter and prover, and operator's name and signature. If the proving is being done on a meter used for custody transfer, it is customary for a representative of each custodial company to witness the proving and sign the report if it is satisfactory. The parties involved in the proving should agree on what constitutes an acceptable proving, and if it is not acceptable, what must be done to correct the problem.

Example 3-6 — The following information was taken from a meter proving report. Calculate a meter factor with which to correct the routine meter recorded volumes.

FIG. 3-20
Typical Installation of a Liquid Coriolis Meter

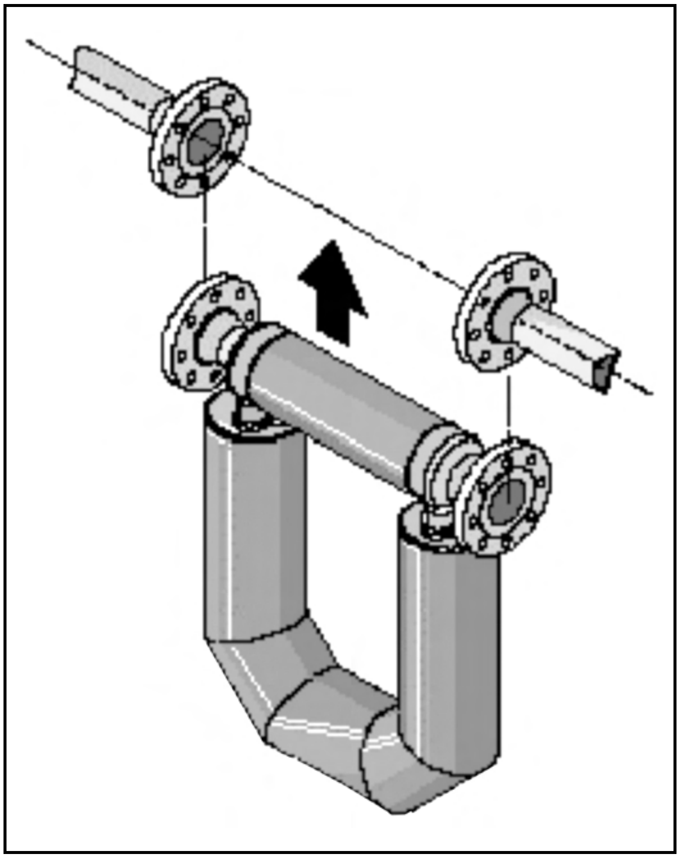

FIG. 3-21

Vibrating Tube Densitometer

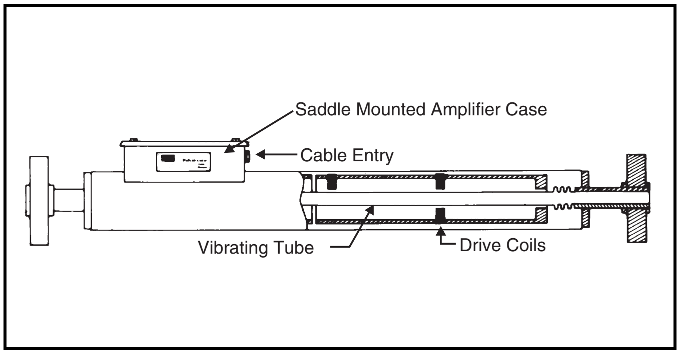

FIG. 3-22

Buoyant Force Densitometer

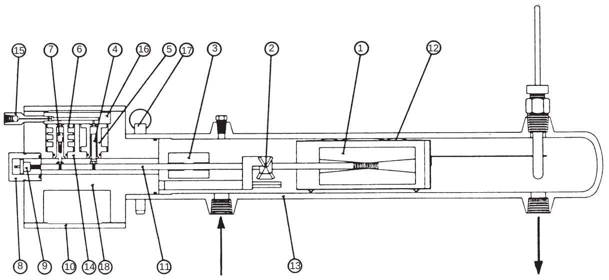

1	Float
2	Pivot
3	Counterweight
4	Restoring Magnet
5	Restoring Coil
6	Sensing Coil
7	Sensing Slug
8	Calibration Plug
9	Zero Calibration Weight
10	Knurled Sleeve
11	Balance Beam
12	Float Shield
13	Barrel Chamber
14	Terminal Strip
15	Vent
16	Coil Cover
17	Closure Pin
*18	Plug-in Circuit Board

* Not Shown

Given Data:
Product = Propane-Butane Mix
Specific Gravity = 0.544
Totalizer Pulses Per Barrel = 13188
Uncorrected Prover Volume = 2.0734 bbl
Vapor Pressure = 115 psig
Prover Size = 12 in. pipe with 0.375 in. wall
Vertical Double Case Meter

Proving Results:

Run No.	Temperature, °F		Pressure, psig[2]		Pulse Count/Round Trip
	Prover	Meter	Prover	Meter	
1	76.6	76.0	385	395	28629
2	76.8	76.8	385	395	28626
3	76.8	76.0	385	395	28635
4	77.6	77.0	385	395	28634
5	77.0	77.2	385	395	28633
6	77.0	76.6	385	395	28631
Average	77.0	76.6	385	395	28631.3
Average (rounded)	77.0	76.5[1]	385	395	28631[3]

NOTES:

1. Average temperatures are rounded to the nearest 0.5°F.
2. Pressures are read to the nearest scale division.
3. Pulse count is rounded to the nearest count.

The volume of a steel prover must first be determined then the characteristics of the fluid are used to correct the fluid to standard conditions using the corrected prover volume.

Prover Corrections:

1. Uncorrected prover volume = 2.0734 bbl
2. The correction for steel expansion at 77.0°F, C_{ts} (Fig. 3-23) = 1.0003
3. The correction for the pressure effect on the steel prover, C_{ps} (Fig. 3-24) = 1.0004
4. The correction for the effect of temperature on the prover fluid, C_{tl} (Reference No. 4) = 0.9780
5. The correction for the effect of pressure on the prover fluid, C_{pl} (Reference No. 2) = 1.0078
6. Combined prover corrections $= C_{ts} \bullet C_{ps} \bullet C_{tl} \bullet C_{pl} = 0.9863$
7. Corrected prover volume = 0.9863 x 2.0734 bbl = 2.0450 bbl

Metered fluid corrections:

1. Uncorrected metered volume $= \dfrac{\text{Total meter pulses recorded}}{\text{manufacturer's pulses per barrel}}$

$$= \frac{28631}{13188} = 2.1710 \text{ bbl}$$

2. The correction for the effect of temperature on the metered volume, C_{tl} (Reference No. 4) = 0.9789
3. The correction for the effect of pressure on the metered volume, C_{pl} (Reference No. 2) = 1.0080
4. Corrected metered volume $= C_{tl} \bullet C_{pl} \bullet 2.1710 = 2.1421$ bbl
5. Meter factor $= \dfrac{\text{corrected prover volume}}{\text{corrected metered volume}} = \dfrac{2.0450}{2.1421} = 0.9547$

Fig. 3-25 is an example meter proving report. The uncorrected prover volume is that volume of the prover tube between the switches, Fig. 3-26. Several meters can utilize one prover if piping manifolds exist. If more than one product is proven by the same prover, precautions must be taken to prevent contamination. Double block-and-bleed valves are commonly used to isolate specification products. Additional information on meter proving can be found in Chapter 4 of the API Manual of Petroleum Measurement Standards.

STEAM MEASUREMENT

The steam flow equation (Fig. 3-4, Eq. 3-8) can be used to calculate steam flow rate by applying a steam factor, F_s, found in Fig. 3-27 for saturated steam and Fig. 3-28 for superheated steam. The F_s factor makes corrections for volume and density at the pressure and temperature conditions of the steam.

This orifice meter volume calculation is also included in Excel spreadsheet located on the diskette on the inside cover of this book or on the CD version of the book.

MISCELLANEOUS MEASUREMENT DEVICES

Pitot — A pitot tube is a cylindrical probe installed in a flowing fluid which senses the impact pressure created by the velocity of a flowing fluid. The probe senses the impact pressure by a hole in the upstream face of the tube, and the static pressure on the side or downstream face of the tube. The use of a pitot tube is severely limited by its sensitivity to velocity profile.

The multiport averaging pitot (Fig. 3-29) attempts to overcome the velocity profile sensitivity by providing several ports to sense the varying impact pressures across the diameter of the pipe. The pressures are averaged and the differential pressure between this average and the static pressure detected on the downstream side of the probe, or from the line itself, is used to determine flow.

FIG. 3-23

Temperature Correction Factors for Mild Steel, C_{ts}

C_{ts} for mild steel having a cubical coefficient of expansion of 1.86 x 10^{-5} per °F

Observed Temperature, °F	C_{ts} Value	Observed Temperature, °F	C_{ts} Value
(–7.2) - (–1.9)	0.9988	73.5 - 78.8	1.0003
(–1.8) - 3.5	0.9989	78.9 - 84.1	1.0004
3.6 - 8.9	0.9990	84.2 - 89.5	1.0005
9.0 - 14.3	0.9991	89.6 - 94.9	1.0006
14.4 - 19.6	0.9992	95.0 - 100.3	1.0007
19.7 - 25.0	0.9993	100.4 - 105.6	1.0008
25.1 - 30.4	0.9994	105.7 - 111.0	1.0009
30.5 - 35.8	0.9995	111.1 - 116.4	1.0010
35.9 - 41.1	0.9996	116.5 - 121.8	1.0011
41.2 - 46.5	0.9997	121.9 - 127.2	1.0012
46.6 - 51.9	0.9998	127.3 - 132.5	1.0013
52.0 - 57.3	0.9999	132.6 - 137.9	1.0014
57.4 - 62.6	1.0000	138.0 - 143.3	1.0015
62.7 - 68.0	1.0001	143.4 - 148.7	1.0016
68.1 - 73.4	1.0002	148.8 - 154.0	1.0017

Note: This table is suitable for application in meter proving; in prover calibration use the formulas. For the formula used to derive the tabulated values and to calculate values, see Section 12 of the API Manual.

The flow formula for the pitot tube is very similar to that for an orifice. F_{na} is a units conversion factor and C is a flow coefficient for this type installation.

$$F_b = (F_{na})(C) \bullet D^2 \qquad \textbf{Eq 3-19}$$

Installation requirements include precise alignment of the tube and upstream flow conditioning which provides a symmetrical velocity profile. Use of the averaging pitot in a pipe with a diameter or wall thickness other than design will cause erroneous results.

NATURAL GAS SAMPLING

The purpose of natural gas sampling is to secure a representative sample of the flowing gas stream for a specific period of time. Naturally, the more often the sampling system samples the flowing stream, the more likely it is to be truly representative of a stream with varying composition.

Sampling systems consist of numerous components and must include some key elements including a sample probe, any necessary connecting tubing, sample containers or sample valves and appropriate heat-tracing and insulation. For on-line gas chromatographs (g.c.s) or on-stream analyzers, the sampling system ends at the injection valve on the inlet of the g.c.

The sample may be collected on a spot, composite or continuous basis.

Spot sampling simply means that a technician manually collects a sample directly from the stream at scheduled intervals or as needed, but usually on a monthly or longer regular basis.

Composite samples are usually collected on a weekly or monthly basis. Composite sampling systems should grab small samples on a flow proportional basis, then inject them into the composite sampling cylinder. There are composite sampling systems that work on a simple time cycle (time proportional sampling), but they are not recommended, especially if they continue to sample even when flow has stopped. If a time proportional system is already in service, it must be equipped with a flow switch or similar device to ensure that when flow stops, sampling will stop.

Continuous systems provide a steady flow of sample through a sample loop that passes near a composite sampler or on-stream analyzer. In the case of an on-line chromatograph, the injection valve of the g.c. is able to admit and distribute a sample from the flowing loop that is representative of the flow in the main line. Sample rate flow loops must be carefully sized and generally should operate at velocities around 5 ft/sec., but this may vary if the sample loop is exceptionally long (over 100 feet).

The sample point is usually located downstream of the meter run and must be remote from severe flow disturbances such as control valves and orifice plates by at least five nominal pipe diameters. For flowing streams that are not near their hydrocarbon dew point, the probe should be positioned either upstream or downstream of the meter tube, and at least 5 pipe diameters downstream of any flow disturbing elements, such as elbows, swirl generators, headers, valves and tees. If the sample source is at or near its hydrocarbon dewpoint, some research has indicated that the probe should be located at least 8 pipe diameters downstream of any flow disturbance, including an orifice meter. The sample point must not be installed within the upstream or downstream engineered sections of the meter tube, since the fitting and probe could produce disturbances in the flow profile going through the meter in the run. The probe installed in the sample point extends into the center 1/3 of the internal diameter of the meter run to ensure no heavy materials or contaminants migrating along the pipe walls are allowed to contaminate the sample. Note that for large diameter pipelines, the probe never needs to be longer than 10 inches. The probe is equipped with an outlet valve to allow the system to be shut in when no sampling is being performed or to perform maintenance on downstream equipment in composite or continuous sampling systems.

The tubing connecting the sample probe to the downstream sample system(s) should be internally clean, as short as practical (usually 6 to 24 inches maximum) and made of either nylon or stainless steel. Stainless steel is actually preferred due to its strength and flexibility and resistance to melting and/or sharp edges, but nylon is not porous and when used safely, can also give good analytical results. Teflon, carbon steel, plastic tubing, Tygon tubing and many other materials do not perform well.

Care must be taken to insure there are no leaks in the sampling system. Typically, if a leak occurs, smaller molecules tend to escape preferentially and create a bias in analytical results. If the leak is large, there may be enough cooling to produce condensation in the sample system and cause the samples to be very non-representative.

Note that whenever the sample line is operating in ambient temperatures below the flowing temperature of the stream, the line may need to be heat-traced and insulated. If the ambient temperature is lower than the dewpoint temperature of the flowing stream, heat tracing and insulation are required. Be sure that the heat tracing is properly and safely done, using electrically limited tracing meeting appropriate electrical

FIG. 3-24

Pressure Correction Factors for Steel, C_{ps}

(All measurements are in pounds per square inch gauge.)

	Prover Dimensions									
Factor C_{ps}	6-in. Pipe 0.25-in. Wall	6-in. Pipe 0.280-in. Wall	8-in. Pipe 0.322-in. Wall	8-in. Pipe 0.375-in. Wall	10-in. Pipe 0.365-in. Wall	10-in. Pipe 0.375-in. Wall	12-in. Pipe 0.375-in. Wall	14-in. Pipe 0.312-in. Wall	14-in.Pipe 0.375-in. Wall	Factor C_{ps}
1.0000	0–61	0–69	0–60	0–71	0–54	0–56	0–46	0–34	0–42	1.0000
1.0001	62–183	70–207	61–181	72–214	55–163	57–168	47–140	35–104	43–127	1.0001
1.0002	184–306	208–346	182–302	215–357	164–273	169–281	141–234	105–174	128–212	1.0002
1.0003	307–428	347–484	303–423	358–499	274–382	282–393	235–328	175–244	213–297	1.0003
1.0004	429–551	485–623	424–544	500–642	383–491	394–506	329–421	245–314	298–382	1.0004
1.0005	552–673	624–761	545–665	643–785	492–601	507–618	422–515	315–384	383–466	1.0005
1.0006	674–795	762–900	666–786	786–928	602–701	619–731	516–609	385–454	467–551	1.0006
1.0007	796–918	901–1038	787–907	929–1071	711–819	732–843	610–703	455–524	552–636	1.0007
1.0008	919–1040		908–1028		820–928	844–956	704–796	525–594	637–721	1.0008
1.0009					929–1038	957–1068	797–890	595–664	722–806	1.0009
1.0010							891–984	665–734	807–891	1.0010
1.0011							985–1078	735–804	892–976	1.0011
1.0012								805–874	977–1061	1.0012
1.0013								875–944		1.0013
1.0014								945–1014		1.0014
1.0015										1.0015
1.0016										1.0016
1.0017										1.0017
1.0018										1.0018
1.0019										1.0019
1.0020										1.0020
1.0021										1.0021
1.0022										1.0022
1.0023										1.0023
1.0024										1.0024

	Prover Dimensions								
Factor C_{ps}	16-in. Pipe 0.375-in. Wall	18-in. Pipe 0.375-in. Wall	20-in. Pipe 0.375-in. Wall	24-in. Pipe 0.375-in. Wall	26-in. Pipe 0.375-in. Wall	26-in. Pipe 0.500-in. Wall	30-in. Pipe 0.500-in. Wall	30-in. Pipe 0.500-in. Wall	Factor C_{ps}
1.0000	0–36	0–32	0–29	0–24	0–22	0–30	0–25	0–21	1.0000
1.0001	37–110	33–97	30–87	25–72	23–66	31–89	26–77	22–64	1.0001
1.0002	111–184	98–163	88–146	73–120	67–111	90–150	78–129	65–107	1.0002
1.0003	185–258	164–228	147–204	121–169	112–155	151–209	130–181	108–149	1.0003
1.0004	259–331	229–293	205–262	170–217	156–200	210–270	182–232	150–192	1.0004
1.0005	332–405	294–358	263–321	218–266	201–245	271–329	233–284	193–235	1.0005
1.0006	406–479	359–423	322–379	267–314	246–289	330–390	285–336	236–278	1.0006
1.0007	480–553	424–489	380–438	315–362	290–334	391–449	337–387	279–321	1.0007
1.0008	554–627	490–554	439–496	363–411	335–378	450–510	388–439	322–364	1.0008
1.0009	628–700	555–619	497–555	412–459	379–423	511–569	440–491	365–407	1.0009
1.0010	701–774	620–684	556–613	460–508	424–467	570–630	492–543	408–450	1.0010
1.0011	775–848	685–749	614–672	509–556	468–512	631–689	544–594	451–492	1.0011
1.0012	849–922	750–815	673–730	557–604	513–556	690–750	595–646	493–535	1.0012
1.0013	923–995	816–880	731–788	605–653	557–601	751–809	647–698	536–578	1.0013
1.0014	996–1069	881–945	789–847	654–701	602–646	810–870	699–750	579–621	1.0014
1.0015		946–1010	848–905	702–749	647–690	871–929	751–801	622–664	1.0015
1.0016			906–964	750–798	691–735	930–990	802–853	665–707	1.0016
1.0017			965–1022	799–846	736–779	991–1049	854–905	708–749	1.0017
1.0018				847–895	780–824		906–956	750–792	1.0018
1.0019				896–943	825–868		957–1008	793–835	1.0019
1.0020				944–991	869–913			836–878	1.0020
1.0021				992–1040	914–957			879–921	1.0021
1.0022					958–1022			922–964	1.0022
1.0023								965–1007	1.0023
1.0024									1.0024

Notes: 1. This table is based on the following equation: $C_{ps} = 1 + \frac{P_p - P_s D}{E_m}$

Meter Proving Report

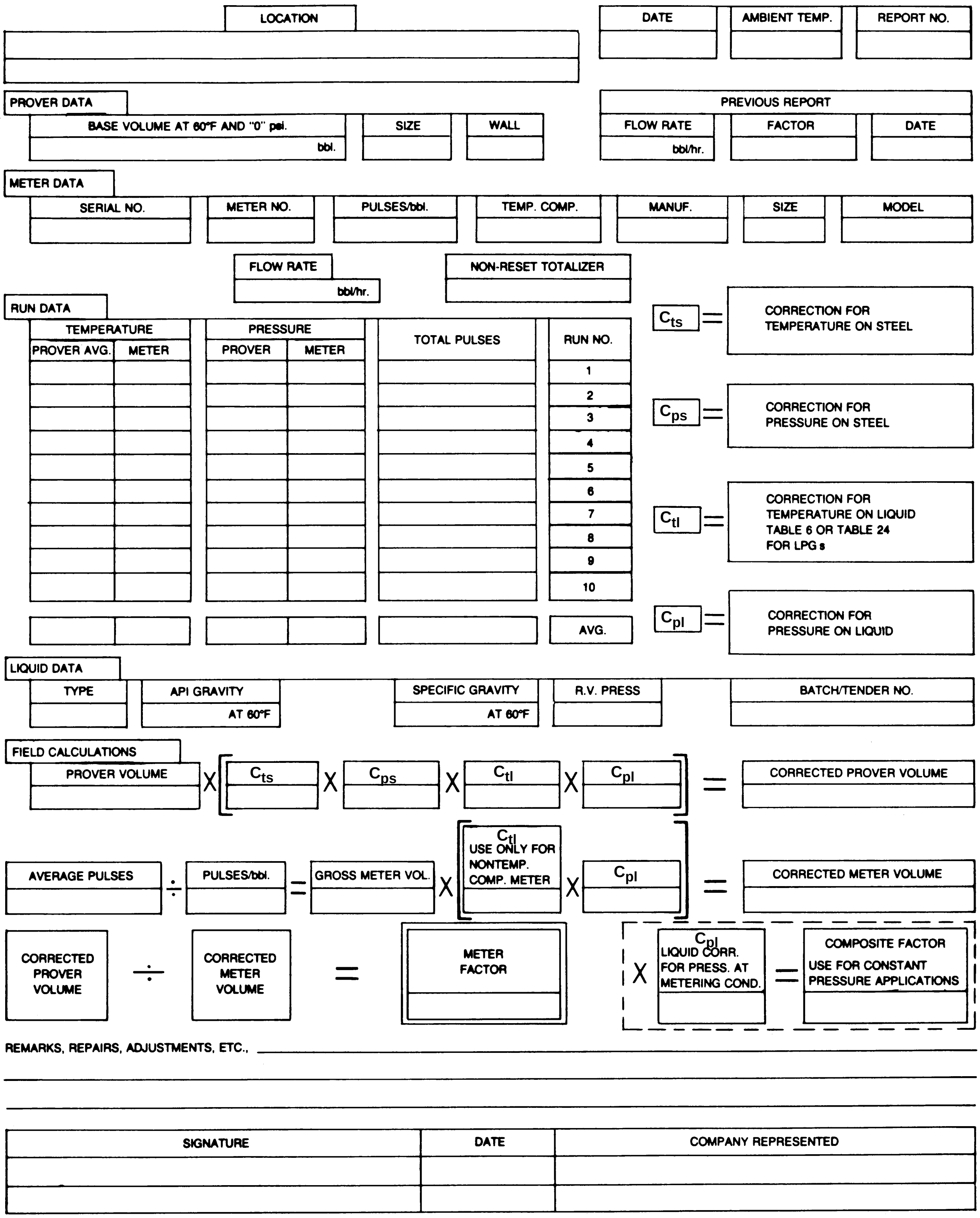

LOCATION	DATE	AMBIENT TEMP.	REPORT NO.

PROVER DATA

BASE VOLUME AT 60°F AND "0" psi.	SIZE	WALL
bbl.		

PREVIOUS REPORT		
FLOW RATE	FACTOR	DATE
bbl/hr.		

METER DATA

SERIAL NO.	METER NO.	PULSES/bbl.	TEMP. COMP.	MANUF.	SIZE	MODEL

FLOW RATE	NON-RESET TOTALIZER
bbl/hr.	

RUN DATA

TEMPERATURE		PRESSURE		TOTAL PULSES	RUN NO.
PROVER AVG.	METER	PROVER	METER		
					1
					2
					3
					4
					5
					6
					7
					8
					9
					10
					AVG.

C_{ts} = CORRECTION FOR TEMPERATURE ON STEEL

C_{ps} = CORRECTION FOR PRESSURE ON STEEL

C_{tl} = CORRECTION FOR TEMPERATURE ON LIQUID TABLE 6 OR TABLE 24 FOR LPG s

C_{pl} = CORRECTION FOR PRESSURE ON LIQUID

LIQUID DATA

TYPE	API GRAVITY	SPECIFIC GRAVITY	R.V. PRESS	BATCH/TENDER NO.
	AT 60°F	AT 60°F		

FIELD CALCULATIONS

PROVER VOLUME X [C_{ts} X C_{ps} X C_{tl} X C_{pl}] = CORRECTED PROVER VOLUME

AVERAGE PULSES ÷ PULSES/bbl. = GROSS METER VOL. X [C_{tl} USE ONLY FOR NONTEMP. COMP. METER X C_{pl}] = CORRECTED METER VOLUME

CORRECTED PROVER VOLUME ÷ CORRECTED METER VOLUME = METER FACTOR

X C_{pl} LIQUID CORR. FOR PRESS. AT METERING COND. = COMPOSITE FACTOR USE FOR CONSTANT PRESSURE APPLICATIONS

REMARKS, REPAIRS, ADJUSTMENTS, ETC., ____________________

SIGNATURE	DATE	COMPANY REPRESENTED

Source: API MPMS Ch. 12.2

FIG. 3-26

Example Bidirectional Pipe Prover

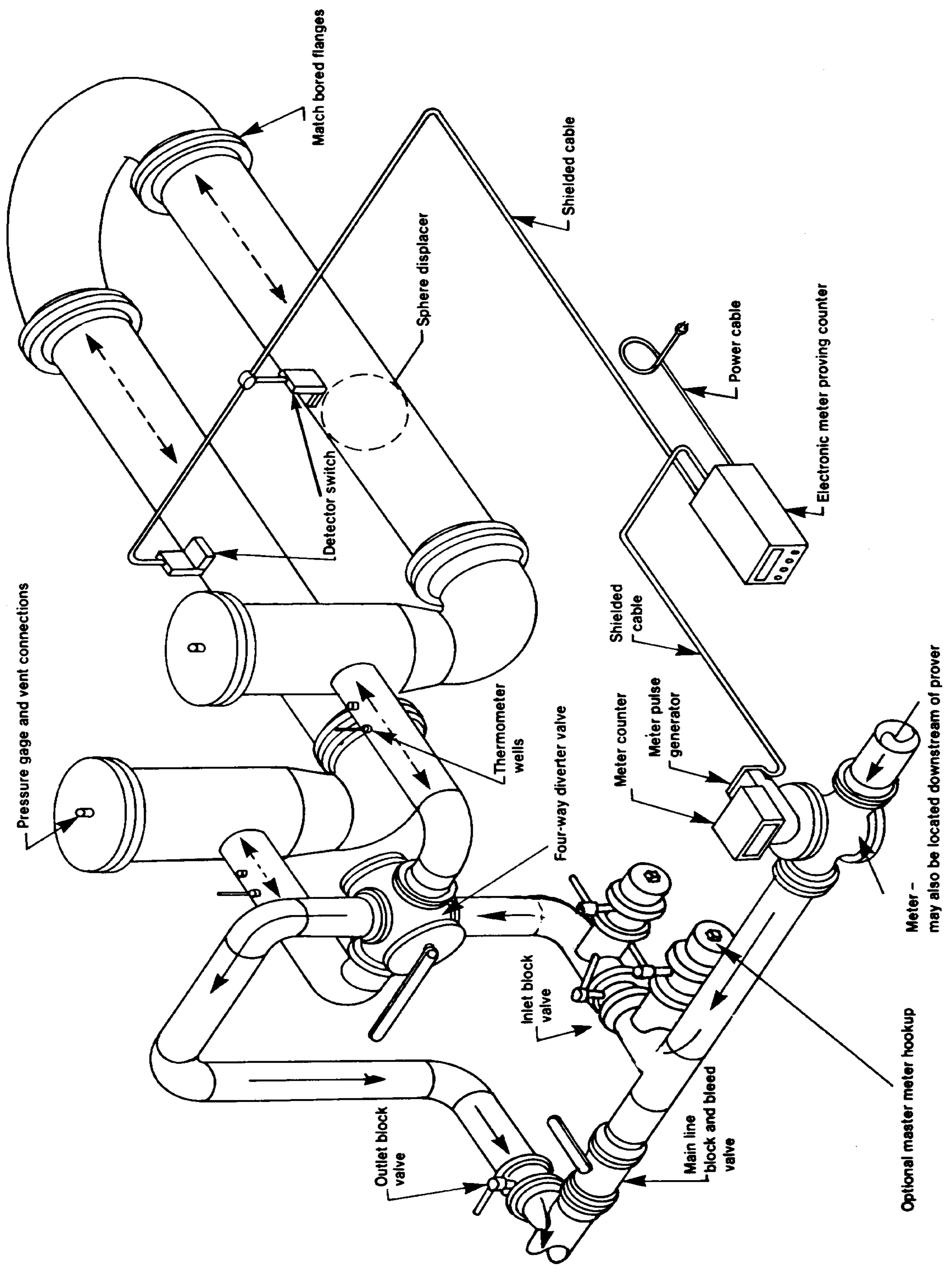

FIG. 3-27

Steam Coefficient Factors, Saturated Steam

$$F_s = \frac{1.0618}{\sqrt{P_f v}}\text{, For } \textit{Bellows–Type} \text{ Meters}$$

Pressure, psig	**Steam Quality, Per Cent**										
	100	**99**	**98**	**97**	**96**	**95**	**94**	**93**	**92**	**91**	**90**
1	.0534	.0537	.0539	.0542	.0545	.0548	.0551	.0554	.0557	.0560	.0563
5	.0530	.0533	.0535	.0538	.0541	.0544	.0547	.0550	.0553	.0556	.0559
10	.0526	.0529	.0531	.0534	.0537	.0540	.0543	.0546	.0549	.0552	.0555
15	.0523	.0526	.0528	.0531	.0534	.0537	.0539	.0542	.0545	.0548	.0551
20	.0520	.0523	.0526	.0528	.0531	.0534	.0537	.0540	.0543	.0546	.0549
25	.0518	.0521	.0524	.0526	.0529	.0532	.0535	.0537	.0540	.0543	.0546
50	.0511	.0513	.0516	.0518	.0521	.0524	.0527	.0529	.0532	.0535	.0538
75	.0506	.0508	.0511	.0514	.0516	.0519	.0522	.0525	.0527	.0530	.0533
100	.0503	.0505	.0508	.0510	.0513	.0516	.0518	.0521	.0524	.0527	.0530
125	.0500	.0503	.0505	.0508	.0510	.0513	.0516	.0519	.0521	.0524	.0527
150	.0498	.0501	.0503	.0506	.0509	.0511	.0514	.0517	.0519	.0522	.0525
175	.0497	.0499	.0502	.0504	.0507	.0510	.0512	.0515	.0518	.0521	.0524
200	.0496	.0498	.0501	.0503	.0506	.0509	.0511	.0514	.0517	.0520	.0522
250	.0494	.0497	.0499	.0502	.0504	.0507	.0510	.0512	.0515	.0518	.0521
300	.0493	.0496	.0498	.0501	.0503	.0506	.0509	.0511	.0514	.0517	.0520
350	.0493	.0495	.0498	.0500	.0503	.0505	.0508	.0511	.0513	.0516	.0519
400	.0493	.0495	.0498	.0500	.0503	.0505	.0508	.0511	.0513	.0516	.0519
450	.0493	.0495	.0498	.0500	.0503	.0505	.0508	.0511	.0513	.0516	.0519
500	.0493	.0496	.0498	.0501	.0503	.0506	.0508	.0511	.0514	.0516	.0519
550	.0494	.0496	.0499	.0501	.0504	.0506	.0509	.0511	.0514	.0517	.0520
600	.0494	.0497	.0499	.0502	.0504	.0507	.0509	.0512	.0515	.0517	.0520

FIG. 3-28

Steam Coefficient Factors, Superheated Steam

$$F_s = \frac{1.0618}{\sqrt{P_f v}}\text{, For } \textit{Bellows–Type} \text{ Meters}$$

Pressure, psig	**Total Steam Temperture, °F**										
	300	**350**	**400**	**450**	**500**	**550**	**600**	**700**	**800**	**1000**	**1200**
25	.0505	.0488	.0472	.0459	.0446	.0435	.0424	.0405	.0388	.0360	.0338
50	.0510	.0491	.0475	.0460	.0447	.0436	.0425	.0405	.0389	.0361	.0338
75		.0494	.0477	.0462	.0449	.0437	.0426	.0406	.0389	.0361	.0338
100		.0498	.0479	.0464	.0450	.0438	.0426	.0407	.0389	.0361	.0338
125		.0501	.0482	.0466	.0451	.0439	.0427	.0407	.0390	.0361	.0338
150			.0485	.0468	.0453	.0440	.0428	.0408	.0390	.0361	.0338
175			.0488	.0470	.0454	.0441	0429	.0408	.0391	.0362	.0339
200			.0491	.0472	.0456	.0442	.0430	.0409	.0391	.0362	.0339
250				.0476	.0459	.0444	.0432	.0410	.0392	.0362	.0339
300				.0481	.0462	.0447	.0434	.0411	.0393	.0363	.0339
350				.0486	.0466	.0449	.0436	.0412	.0393	.0363	.0339
400				.0492	.0470	.0452	.0438	.0414	.0394	.0364	.0340
450					.0474	.0455	.0440	.0415	.0395	.0364	.0340
500					.0478	.0458	.0442	.0416	.0396	.0364	.0340
600					.0488	.0465	.0446	.0419	.0398	.0365	.0341
700						.0472	0451	.0422	.0400	.0366	.0341
800						.0480	.0457	.0425	.0401	.0367	.0341
900						.0489	.0463	.0428	.0403	.0368	.0342
1000						.0500	.0469	.0431	.0405	.0369	.0342
1100							.0477	.0435	.0407	.0370	.0343
1200							.0485	.0438	.0409	.0371	.0343
1300							.0494	.0442	.0412	.0372	.0344
1400							.0505	.0446	.0414	.0372	.0344
1500							.0518	.0450	.0416	.0373	.0345

FIG. 3-29

Basic Operating Principle—Multiple Averaging Pitot

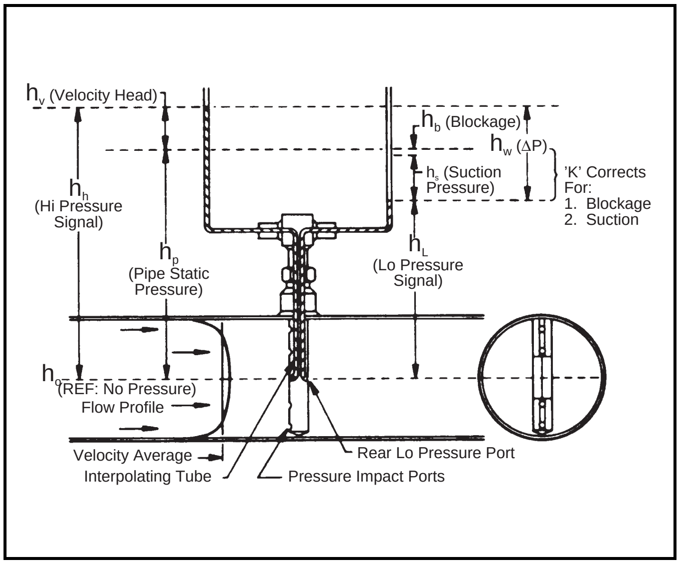

codes for the area classification (typically Class I Group D Division I or II).

Realize that the dewpoint of a gas stream is absolutely critical to accurate sampling. If any component in the sampling system causes the temperature of even a portion of the gas stream being sampled to cool to or below the hydrocarbon dewpoint, the sample will be depleted of heavy components and can no longer be truly representative of the stream. Note that the Btu content in this situation is not always too low. If the sample system continues to condense heavy components for an extended amount of time, accumulations may reach the point that liquid droplets enter the sample and actually cause the indicted Btu content and calculated relative density (specific gravity) to be too high.

The sample cylinders used in spot sampling should be stainless steel, single cavity cylinders. Single cavity cylinders are recommended, due to the difficulty of fully cleaning piston cylinders between use. Residue that may remain in the piston cylinders and their seals may produce incorrect analyses. The cylinders should be equipped with standard design sample valves that are screw open or closed (not 1/4 turn ball valves) and have a flow passage of approximately 1/8 inch diameter.

It may be convenient to use piston (constant pressure) cylinders in composite sampling systems, since you can easily see that the system is working or not working as the level indicator moves. If constant pressure/piston cylinders are used and oil or grease contamination is present in the system, they must be disassembled between use, carefully cleaned and then the seal rings must be replaced if the cylinder is expected to provide representative samples.

Note that if sampling is being performed to determine the levels of volatile or reactive contaminants, such as H_2S, the cylinder may need to be lined with an epoxy/phenolic lining. Even then, particularly reactive materials, such as H_2S or ethyl mercaptan are likely to be lost prior to analysis unless the sample is collected on-site and analyzed immediately. Even a few minutes delay can reduce detectable levels of reactive materials. Shipping a sample to a remote lab and delaying analysis beyond a couple of hours will essentially ensure that the indicated levels of the reactive/volatile material will be too low or perhaps not detectable at all.

The two spot sampling methods that are most recommended are the fill and empty method and the helium pop method. The displacement methods also performed reasonably well during the recent API research studies.

The fill and empty method requires that the cylinder be equipped with a "pigtail" following the sample cylinder outlet valve. While leaving the sample cylinder inlet and outlet valves open, the probe outlet valve and the valve at the end of the pigtail are cycled to alternately fill and empty the sample cylinder. The pigtail ensures that the heat of compression created when the sample cylinder is filled more than offsets the Joule-Thomson cooling produced when the sample cylinder is depressurized. It does this by insuring the maximum pressure drop while depressurizing the sample cylinder is far removed from cylinder itself, at the end of the pigtail. The ability of the fill and empty procedure to actually elevate the temperature of the sampling cylinder above the flowing temperature of the stream being sampled during many operating conditions makes this method the most desirable when the ambient temperature is at or near the hydrocarbon dewpoint of the stream. The pigtail should be approximately 1/4 inch tubing and be at least 36 inches in length, although it may be coiled to make the apparatus easier to handle. The coils should not touch one another, otherwise the heat loss at the end of the pigtail may be transferred quickly across the coils to the sample cylinder. There should be another sample valve, similar to the sample cylinder valves on the outlet of the pigtail. The flow passage through this valve must not be larger than the passage through the cylinder valves. Refer to API Chapter 14.1 for the detailed procedures for performing the fill and empty method and to either API Chapter 14.1 or GPA 2166 for the number of fill and empty purge cycles required at various line pressures.

See Figures 3-30 and 3-31 for two typical fill and empty method configurations:

The helium pop method has the advantage of being a very simple and quick process, but API research showed the method to have a slight negative bias (where the indicated Btu is slightly below the actual Btu). The sample cylinder will be the standard type, properly cleaned, with a 5 psig blanket of dry helium gas in the cylinder. The cylinder is connected to the sample probe outlet valve via a short connection that includes a vent valve. The vent valve will allow a gentle purge of the volume between the probe and the sample cylinder inlet valve prior to sampling. Once the inlet system is purged, close the purge valve, then open the sample cylinder inlet valve. After a moment to allow the cylinder to equalize with line pressure, close the cylinder inlet valve – the sample has been collected. See Figure 3-32 for a typical helium pop method configuration.

There are several other spot sampling methods detailed in the GPA 2166 standard and referenced in the API Chapter 14.1 standard. For relatively rich, unprocessed gas streams, the fill and empty, helium pop or the displacement methods should be used. If the gas is *continuously* lean and dry and sampled at conditions well above its hydrocarbon and water dewpoint, any method in the GPA standard is acceptable, even the continuous purge method. Note that the residue gas streams on the outlet of gas plants do not fit this criteria. Although much of the time the gas is lean and dry, during plant upsets the residue will contain much heavier components not stripped out in the process and may be essentially like the rich, unprocessed gas coming into the front end of the plant for processing. Once the residue gas metering and sampling systems are contaminated by rich, unprocessed gas, liquid contaminates from process carry-overs, or other liquid heavy components, it may take days for the sample system to collect uncontaminated samples unless the system is well-designed and the proper sampling methods are utilized.

Once a spot or composite sample has been collected, the cylinder should be removed, its valves checked to ensure they are securely closed, then caps with Teflon tape on the threads should be installed to ensure no leakage occurs during handling or transport of the cylinders. Any time the cylinder is transported, ensure that it is properly restrained or packaged and that it is properly labeled. The vehicle used to transport the cylinder must have the completed paperwork readily available and completed fully and accurately. Most companies require a sample label or tag be attached to the cylinder that shows where the sample was collected, how it was collected, who collected it and when it was collected. See the API and GPA standards for details.

FIG. 3-30
Fill and Empty Sampling Method (Alternate Configuration)

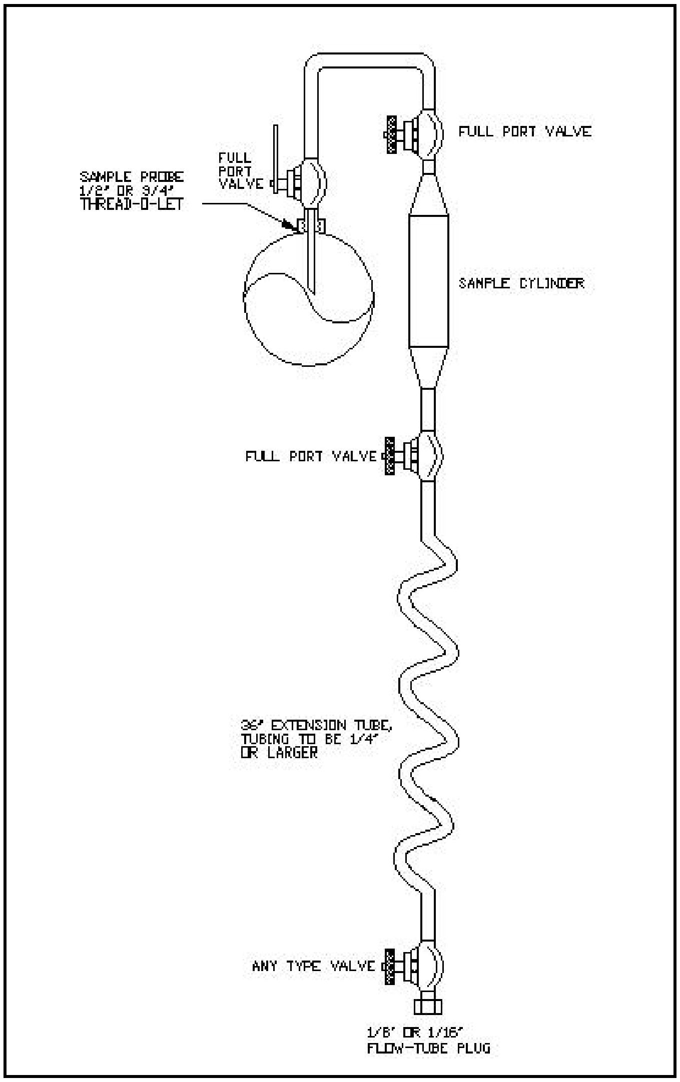

NATURAL GAS LIQUID SAMPLING

Utilizing Floating Piston Cylinders

Liquid sampling requires special precautions to accumulate and transfer representative samples. Pressure in the sample cylinder and/or accumulator must be maintained at 1.5 times the product vapor pressure. Maximum product vapor pressure should be determined using the highest ambient temperature or flowing temperature (whichever is highest) to determine the minimum pre-charge pressure. A method to break up stratification must be provided prior to transfer of the sample to another container and laboratory analysis. Maintaining the appropriate pressure and mixing the sample can be satisfied by using floating piston sample cylinders with mixers (Fig. 3-33). A "rattle ball" or agitator may be used in place of the mixing rod shown. The floating piston cylinders are pre-charged on one end with an inert gas at a pressure 1.5 times above product vapor pressure. This prevents sample vaporization, which could result in erroneous analysis. This design also provides a compressible inert gas cushion to allow for thermal expansion of the liquid. A pressure relief valve is needed, but should it discharge, the integrity of the sample will be lost. Liquid sample cylinders shall not be filled over 80 percent full.

FIG. 3-31
Fill and Empty Sampling Method (Preferred Configuration)

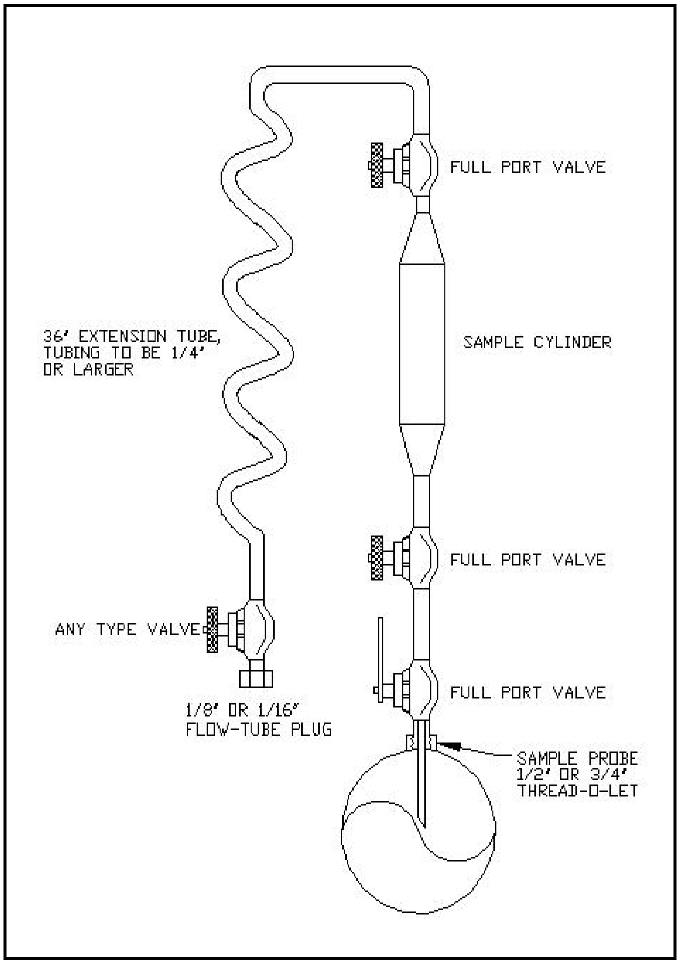

FIG. 3-32

Helium Pop Sampling Method

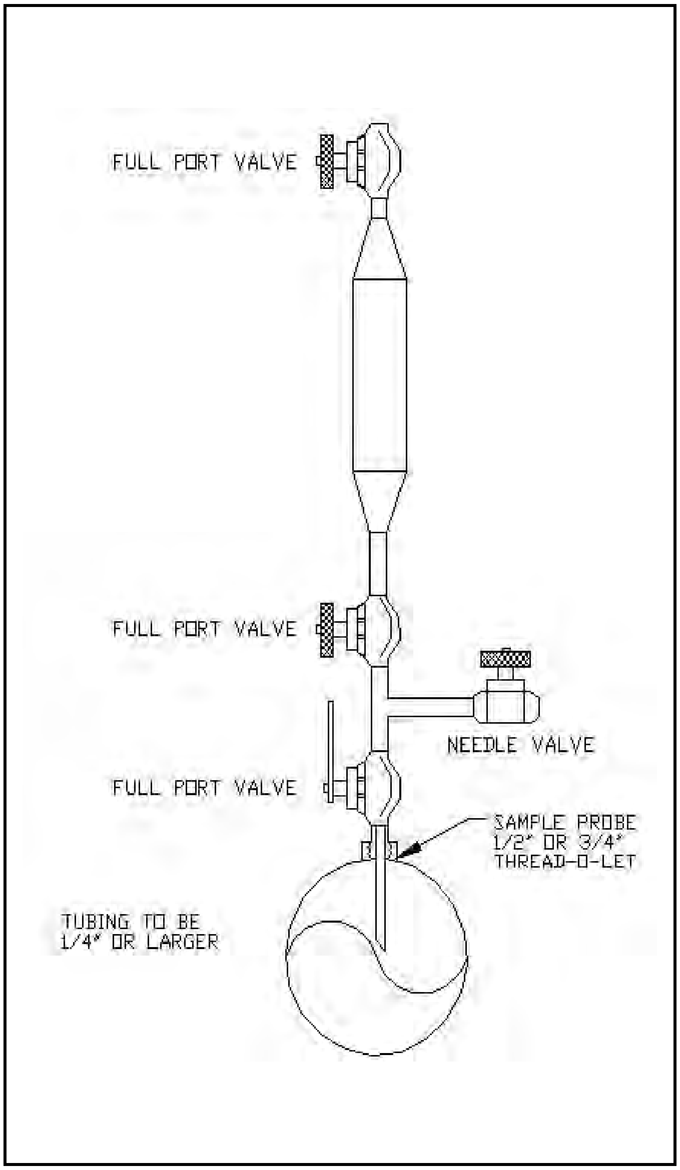

Samples are acquired through a sample probe inserted into the center third of the flowing stream. The probe should be mounted in the top or side of the line. Continuous samplers should use a continuous flowing sample loop (speed loop) or a probe mounted sample pump to ensure the most current sample is always added to the sample container. Speed loops must have a driving device such as an orifice, differential pump, available pressure drop, or "scoop" probes. The driving device should be sized to provide a complete exchange of liquid in the sample loop once per minute. The sample pump must be set to gather flow proportional samples to ensure a true representative sample is obtained. If flowing pressures are higher than the sample accumulator pre-charge pressure, then the sample pump must prevent "free-flowing" of product into the sample container. See Fig. 3-34 for an example continuous sampling application. Speed loop lines may require insulation when cold ambient temperatures have a significant effect on viscosity. The product in the sample container must be thoroughly mixed before being transferred to a transport cylinder. Details and alternative methods for obtaining liquid samples are found in GPA 2174.

NATURAL GAS AND NATURAL GAS LIQUID CHROMATOGRAPHY

Introduction

To properly install a chromatograph system, the following must be considered:

- Product Stream
- Analytical Components of Interest
- The Analytical Method
- Carrier Gas
- Sample Preparation
- Introducing the Sample into the Chromatograph
- Column Selection
- Detectors
- Detector Signal Integration and Data Handling
- Safety Considerations (ventilation, area classification, etc.)
- Purchasing the System
- Installation
- Calibration and Verification
- Training and Follow-up

FIG. 3-33

Liquid Sample Container

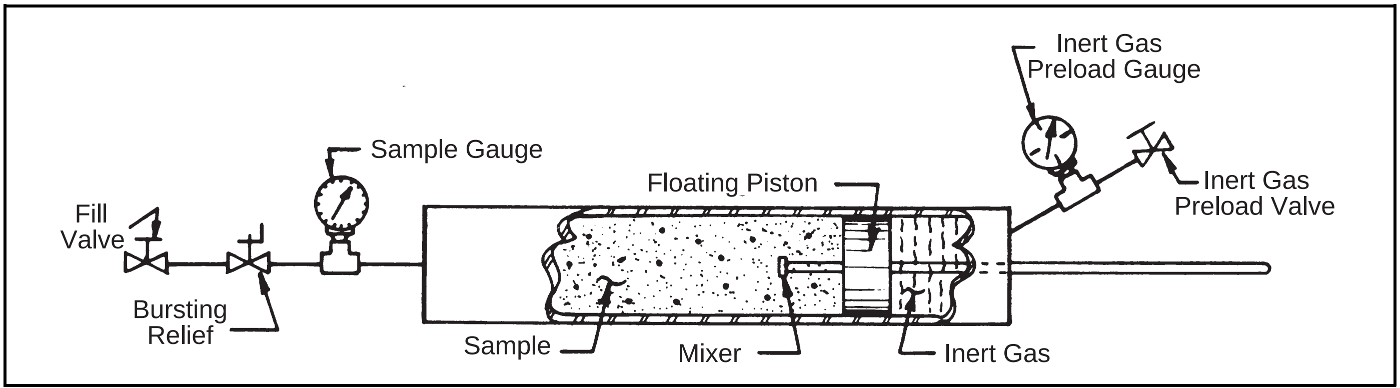

FIG. 3-34

Continuous Sampler

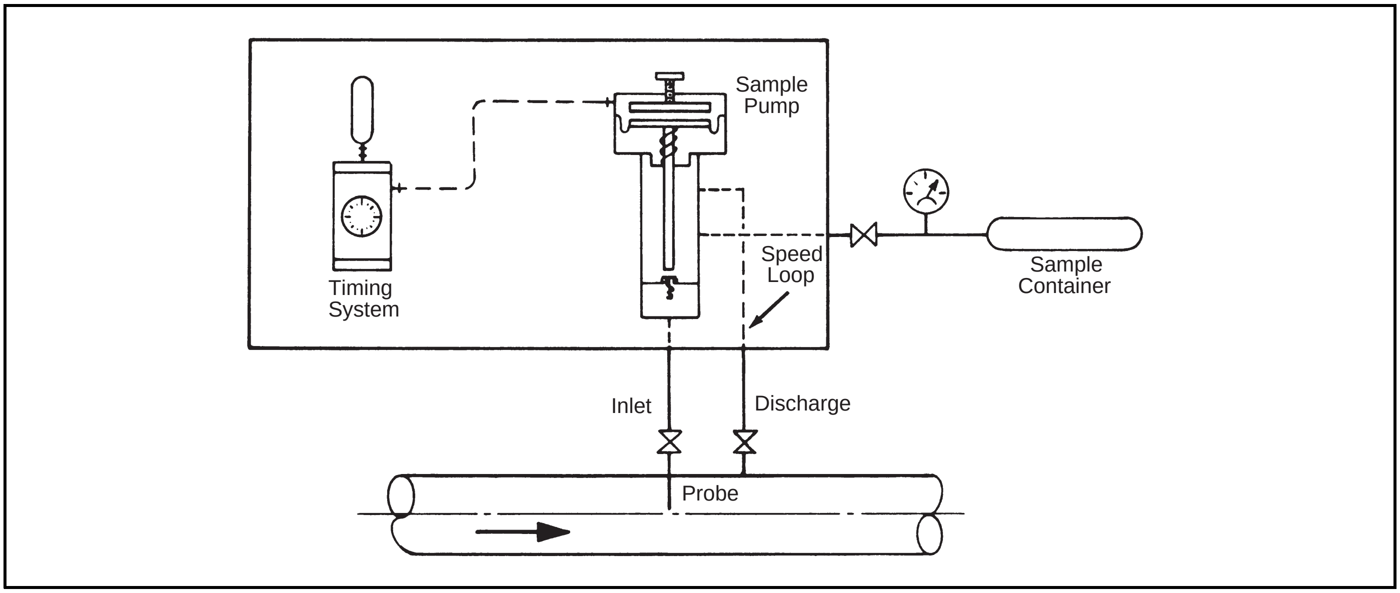

- Maintenance and Trouble Shooting

The following GPA Technical Standards offer guidance in Natural Gas and Natural Gas Liquids Chromatographic Analysis:

- GPA 2165: Method for Analysis of Natural Gas Liquid Mixtures by Gas Chromatography
- GPA 2177: Method for the Analysis of Demethanized Hydrocarbon Liquid Mixtures Containing Nitrogen and Carbon Dioxide by Gas Chromatography
- GPA 2186: Tentative Method for the Extended Analysis of Demethanized Hydrocarbon Liquid Mixtures Containing Nitrogen and Carbon Dioxide by Temperature Programmed Gas Chromatography
- GPA 2261: Method for Analysis of Natural Gas and Similar Gaseous Mixtures by Gas Chromatography
- GPA 2286: Tentative Method for the Extended Analysis of Natural Gas and Similar Gaseous Mixtures by Temperature Programmed Gas Chromatography
- GPA 2199: The Determination of Specific Sulfur Compounds by Capillary Gas Chromatography and Sulfur Chemiluminescence Detection
- GPA 2198: Selection, Preparation, Validation, Care and Storage of Natural Gas and Natural Gas Liquids Reference Standard Blends

The Product Stream and Components of Interest

The first step in selecting a chromatograph system is to identify the product stream and the components of interest. This vital step frequently gets skipped or receives too little attention.

"Typical" samples must be analyzed for every identifiable and significant component. One spot sample will usually not be enough.

Consideration should be made of all possible plant configurations and operating conditions that may cause compositions to change. Even the seasons of the year may need to be considered when selecting samples to develop the typical composition. For new installations where samples are not yet available, industry experts in similar applications should be consulted.

The components of interest may not always include everything in the sample. Many on-line analyzers are designed to monitor a single component or the ratio of two components. Sometimes minor components are included in peaks along with larger fractions. Speed of analysis is often important in the on-line application and discarding or ignoring components that are not of interest can help shorten analysis time. For product accounting purposes, a detailed laboratory analysis of the hexanes-plus components may require extended analysis time. Quite often, it is necessary to make choices between the speed of analysis and the detail or the accuracy of analysis.

The Analytical Method

Natural gas samples are typically heated to 140 ºF to completely vaporize the sample in the cylinder. Samples withdrawn from this 100% vapor sample represent the composition of the entire cylinder and withdrawal of the sample will not compromise the sample left in the cylinder. Of course, the sample line from the cylinder to the chromatograph sample valve and the sample valve itself must be heated to prevent condensation of heavy (low volatility) components in the sample.

The analytical method includes sample introduction, component separation in the column, detection and component quantification. There are many approaches to selecting the method. Personal experience and the complexity of the analysis determine these approaches.

The simplest approach is to select an industry standard (refer to GPA standards listed in the introduction) or to choose a vendor-supplied method where all the development and verification work has already been done. "Fine tuning" an analytical method can be very time consuming, so if a vendor has an off-the-shelf application that matches the need, it may be wise to choose his system.

Colleagues in the industry may have already developed a method that performs the required analysis. Usually, they are willing to share their experience.

Since method development is time consuming, developing one's own method should be considered as a last resort. One would choose to develop his own if the required method does not exist or if there are special requirements of the method such as increased speed or improved selectivity. Complete method development includes sample preparation and introduction, component separation, detector selection, peak integration and data handling.

Carrier Gas

Carrier gas "carries" the sample through the chromatograph system from the sample introduction system to the detector. It is typically Ultra High Purity Helium. Hydrogen or other gases may be selected for special applications.

Sample Preparation and Introduction

The sample preparation and introduction portion of the chromatograph system is arguably the most critical. A chromatograph cannot produce good results without a good sample.

The sample must be withdrawn from the pipe either as 100% liquid or 100% vapor. For Natural Gas samples, a vaporizer regulator at the sample point adds heat to the sample and reduces the pressure of the sample to ensure that it is completely vaporized. The transfer lines to the chromatograph for a vapor sample loop must also be heated to prevent condensation of heavy components.

Sample preparation and introduction for on-line chromatograph systems presents more of a challenge than for laboratory instruments. Of course, the most ideal on-line chromatograph would sit on top of the pipe and directly draw the sample from the system. But the most ideal location for the chromatograph may be some distance from the sample point.

Liquid sample speed loops transport the liquid sample from the sample point to the chromatograph for sampling and back to a lower pressure location in the product piping system. Just as in laboratory chromatograph systems, filtration and moisture removal are important. The system must clean and/or dehydrate the stream without changing the composition of the sample to be analyzed.

Tubing from the sample point to the on-line chromatograph must be small in diameter to ensure high velocities: the analytical results must be as close to real-time as possible. A sample that has been traveling in a large diameter loop for any length of time would only produce historical results.

In laboratory systems, it is important that the sample in the sample cylinder is either completely in the liquid phase or completely in the vapor phase. In a two-phase state, the vapor portion will have a higher concentration of the more volatile (light ends) components than the sample and the liquid phase will have a higher concentration of the less volatile (heavy ends) components. A sample withdrawn from the top or from the bottom of the sample cylinder will not truly represent the composition of the entire cylinder. Sample withdrawal from either phase will irrevocably change the composition of the sample left in the cylinder.

Natural convection of a heated, vaporized sample will keep the sample mixed and homogenous. Samples that are completely liquid must be mechanically mixed to ensure a homogenous sample for analysis.

The introduction of a natural gas sample into the chromatograph includes drawing a vacuum on the sample tubing to assist in vaporizing and removing residual components from previous samples. The sample loop is then purged (typically at (or below) atmospheric pressure) through the sample loop before injection.

It is necessary to maintain pressure well above bubble point pressure on the liquid sample during sample withdrawal. This can be achieved by using an appropriate displacement medium or by using a floating piston/positive displacement sample cylinder. The transfer lines from the sample cylinder to the liquid sample valve and the liquid sample valve itself must remain cool to prevent vaporization of the lighter (more volatile) components.

A block valve/purge control valve system is installed downstream of the liquid sample valve to maintain pressure on the liquid sample until the sample is injected. This system is also used to purge the sample through the sample valve.

It may be necessary to install filters and moisture traps in the sample lines that lead to the gas or liquid sample valves. Of course, the filters and traps must not alter the composition of the sample.

Since most of the troubleshooting problems in a chromatographic system are associated with sample preparation and sample introduction, it is very important to design or select this portion of the system with care.

Column Selection

The column has been called the heart of the chromatographic system. It separates the components of interest from the rest of the sample. Column selection, installation and setup can be as much an art as a science. The first approach should be to review industry standards for an appropriate method. Others in the industry may already be performing the desired analysis and be willing to share information. Vendors may have already developed an appropriate method and sell the entire system as a bundled package.

If an already existing method cannot be found, columns can be selected from vendor catalogs. These catalogs usually include chromatogram examples of column performance. Columns may separate components based on boiling points or by chemical polarity. Columns may be packed (for larger volume samples) or capillary (for more efficient separation).

Optimum column temperatures and carrier gas flow must be determined. Increasing flow rates generally reduces individual component retention time and reduces sharpness of resolution. Increasing temperature has the same effect as increasing flow.

Sometimes combinations of columns can be used to achieve the best results. Special valving can selectively direct sample flow to different columns at different times in the analytical process. Valving and trap columns can be used to direct some components to the detector and other components to be vented to the atmosphere.

Creative temperature programming of the column oven can create optimum separation conditions at appropriate times during the sample analysis. Components with the low-boiling-point temperatures elute from the column first and are usually separated from each other at lower column temperatures. Higher boiling point components come off the column rather slowly and increased temperatures help to speed the process. An oven temperature program that starts off rather cool and heats up as the analysis is in progress may help the column separate both the low and high boiling point components effectively.

Detectors

The thermal conductivity detector is considered a universal detector. It will detect any component that has a thermal conductivity different from the carrier gas. Helium is the most frequently used carrier gas. It has greater thermal conductivity than any other component except hydrogen.

The thermal conductivity detector is a heated wire filament or thermistor bead. See Figure 3-35. Its electrical conductivity is partially determined by its temperature. As product components elute from the end of the column, they cause the detector temperature to increase as compared to the temperature of a filament with pure carrier gas (reference gas) flowing. This changes the electrical conductivity and the changed electrical signal is electronically interpreted by the integrator or computer system to produce a chromatogram peak whose area is proportional to the composition of the component.

Unfortunately, the thermal conductivity detector is not extremely sensitive. It may not be the detector of choice for trace components.

FIG. 3-35
Thermal Conductivity Detector

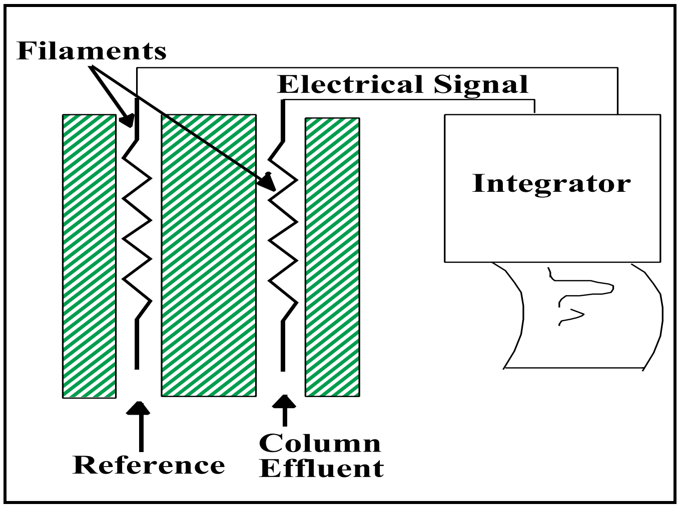

The flame ionization detector (Figure 3-36) is more sensitive than the thermal conductivity detector for hydrocarbons and many other materials. This detector is not sensitive to all the components found in natural gases and natural gas liquids. (Carbon Dioxide and Nitrogen, for example). The presence of the flame may be objectionable in some environments and must be fully considered.

The effluent from the column flows through a hydrogen-air flame. The flame jet is electrically charged. As the hydrocarbons are broken up in the flame, ionized particles are formed. These particles then flow across an electrically charged collector that develops an electrical signal proportional to the concentration of the component.

FIG. 3-36
Flame Ionization Detector

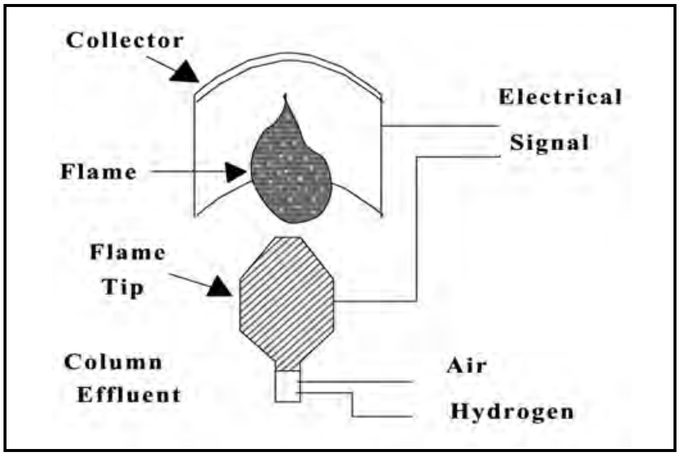

There are many specialized detectors that selectively detect only certain components such as sulfur or halogens.

Integration and Data Handling

Integration and data handling can be very simple or extremely complicated. An on-line analyzer may produce a simple chart recorder trace to indicate the concentration of a component of interest. A laboratory chromatograph might have a simple integrator to print out a calibrated report form.

Integrated peak information can be imported into other PC-based programs to do post-run calculations. These results can be carried over a laboratory information management system to provide data throughout the laboratory or the company. Online chromatographs can provide a broad spectrum of alarm and control functions.

Calculation and data handling packages can be purchased as bundled packages hired out to contract programmers or developed in house. It is important to establish communication protocol between individual parts of the chromatographic system before purchasing equipment. It would be very embarrassing to have a chromatograph and an integrator that could not communicate with each other.

Safety Considerations

Consult the electrical and ventilation codes prior to purchasing the system. The location of the chromatograph system may dictate electrical class/division requirements. Hazardous areas or sample components may dictate special ventilation requirements. Hazardous substance detectors, alarms and shutdowns may be required.

Purchasing the System

When selecting a vendor, several things should be considered. Personal experience with a vendor may heavily influence the decision. Company-wide ownership of certain brands of equipment might tip future purchases in favor of that equipment due to spare parts inventory and local expertise considerations.

Local vendor support should be considered. Are spare parts readily available? Is there a resident vendor technician? Is training provided?

Before selecting a vendor, it is important to list all criteria. The criteria should then be prioritized. Sometimes this process makes the vendor choice obvious. Visiting other facilities with systems in operation may help in the selection.

Consider different approaches to purchasing. Some vendors will place their equipment on approval. Sometimes it makes more sense to rent or lease the equipment. Check for sale or trade-in options.

Installation

Proper site preparation can dramatically simplify installation of the equipment. Pay careful attention to manufacturer provided physical dimensions; few things are as embarrassing as to discover that a piece of equipment will not fit. Room to perform maintenance functions and for expansion should be planned.

Verify electrical power. Many laboratory chromatographs require a 20-amp receptacle. Power supplies to laboratory equipment should have isolated grounding.

Close attention should be paid to the vendor-specified quality of bottled gasses. All gas and sample lines should be thoroughly cleaned before installation of the chromatograph system.

Communications equipment should be verified. Has the proper wiring been run? Are the appropriate connectors attached?

During the actual setup process, it is important to document everything. Fine-tuning of a chromatograph system can be time consuming. Each change and its results should be noted. Performance evaluation and calibration information should be retained. Careful record keeping and documentation of initial parameters can be invaluable in future troubleshooting.

Calibration and Verification

Calibration should be performed in accordance with the referenced industry analytical methods. Note that calibration standards should be gravimetrically prepared (weighed components).

Verification of the calibration may include any or all of the following:

- Plot of Molecular weight of components against calibration response factors as outlined in Appendix B of GPA 2198.
- Running the calibration as an unknown on a chromatograph that is calibrated to a verified standard.
- Comparing results from the newly calibrated standard with the results of another laboratory. See appendix on laboratory certification in API 14.1 and GPA 2177 for comparison guidelines.

Training and Follow Up

The importance of training cannot be overemphasized. It is irresponsible to install a piece of equipment and leave without ensuring that the operators and technicians have sufficient knowledge to use and maintain the system. Frequent follow up helps to "sell" the system to field personnel and to ensure that the newly installed system is performing up to expectations.

Maintenance and Troubleshooting

Appropriate maintenance schedules should be established. Visual checks of system performance should be done frequently. Peak shapes and retention times can tell a great deal about the condition of the system. Accuracy checks should be done on a frequent basis.

Carrier gas flows and pressures should be checked at least daily. The carrier gas must be Ultra High Purity. Sample conditioning systems need to be checked. Filter change schedules should be determined based on the history of the system. Sample systems for on-line chromatographs require frequent attention.

Chromatographic troubleshooting has been the topic of several books. It would be impossible to do justice to the subject in this paper. But a few basic techniques can be discussed.

The first order of troubleshooting is to ask, "What is different?" Sometimes clearly identifying the symptoms that are different from the norm will make the solution obvious. Carefully compare the "normal" conditions documented at system startup to existing conditions.

A second question to ask is, "What have I changed?" Has a new piece of equipment been added to the power supply source? Have carrier gas bottles just been changed?

Many subsystems work together to produce the final chromatographic report: sample conditioning and injection; column condition, flow rates, temperatures; detector performance; integrator hardware and software functions; secondary calculation, alarm and control functions.

The best approach to these subsystems is to divide and conquer. As an example, carrier gas flow can be diverted directly to the detector in order to isolate possible column problems from the system. By selectively isolating each subsystem, the chromatograph troubleshooting process can be greatly simplified.

Summary

Selection, installation and operation of a chromatograph system need not be a difficult task if careful attention is paid to the details outlined in this paper. Prior planning of sample systems, column selection, detectors and data handling equipment can ensure a successful installation.

Note: The CD located on the inside cover of this book contains volume calculation spreadsheets for your use.

REFERENCES

1. Fluid Meters, Sixth Edition (1971), The American Society of Mechanical Engineers, New York, New York.
2. Manual of Petroleum Measurement Standards, American Petroleum Institute, Washington, D.C.
3. GPA Standard 2145, Table of Physical Constants for Hydrocarbons and Other Components of Interest to the Natural Gas Industry, Gas Processors Association, Tulsa, OK.
4. GPA TP-25, Temperature Correction for the Volume of Light Hydrocarbons, Tables 24E and 23E, Gas Processors Association of Tulsa, OK.

SECTION 4

Instrumentation

Instrumentation in a gas processing plant is usually comprised of a system of pneumatic, hydraulic, and electronic devices for measurement and control of all the process variables (pressure, flow, temperature, etc.) which are pertinent to the operation of the plant. In addition, computers are normally included in the instrumentation system to handle functions such as data gathering and transmission, bulk data storage, display, alarms, logging, computations, and control. Since the advent of integrated circuit electronics, specifically the microprocessor, many types of instruments are becoming more intelligent or "computerized."

The basic purposes of this section are to provide:

- A ready reference of definitions and symbols associated with gas plant instrumentation.
- Guidelines and design information for good process measurement, signal transmission, signal indication, and control response.
- A reference of terminology which pertains to the instrumentation of gas plants and related facilities.

FIG. 4-1

Nomenclature

Controller Symbol	Description	Output Expression
P	Proportional	$CO = K_p (PV - SP) + MO$
I	Integral (Reset)	$CO = K_i \int (PV - SP)\, dt$
D	Derivative (Rate)	$CO = K_d[d(PV - SP)/dt]$

C_v = valve flow coefficient
CO = controller output
d = valve inlet diameter
D = internal diameter of the pipe
F_d = valve style modifier
F_F = liquid critical pressure ratio factor, dimensionless
F_k = ratio of specific heats factor, dimensionless
F_L = liquid pressure recovery factor of a valve without attached fittings, dimensionless
F_p = piping geometry factor, dimensionless
F_R = Reynolds number factor, dimensionless
G_f = liquid specific gravity at upstream conditions, ratio of density of liquid at flowing temperature to density of water at 60° F, dimensionless
G_g = gas specific gravity (ratio of density of flowing gas to density of air with both at standard conditions, which is equal to the ratio of the molecular weight of gas to the molecular weight of air), dimensionless
k = ratio of specific heats, dimensionless
K = gain
K_c = cavitation index, dimensionless
K_d = derivative gain constant
K_i = integral mode gain constant
K_n = normalization constant
K_p = proportional mode gain constant
K_u = ultimate sensitivity
M = molecular weight, atomic mass units
MO = manual-mode controller output
$N_1, N_2 \ldots N_x$ = numerical constants for units of measurement used
P_c = absolute thermodynamic critical pressure
P_u = ultimate time period
P_v = vapor pressure of liquid at valve inlet temperature, psia
P_1 = upstream absolute static pressure, measured two nominal pipe diameters upstream of valve-fitting assembly, psia
P_2 = downstream absolute static pressure, measured six nominal pipe diameters downstream of valve-fitting assembly, psia
ΔP = pressure differential, $P_1 - P_2$
PB = proportional band setting
PB_u = ultimate proportional band setting
PV = process variable measurement
(PV – SP) = error signal
q = volumetric flow rate
Q_g = gas or vapor flow rate, lb/hr or cu ft/hr
Q_L = liquid flow rate, gpm
SP = setpoint
T = absolute temperature of gas at inlet, °R
T_c = time constant
T_d = derivative mode time constant
T_i = integral mode time constant
T_t = absolute upstream temperature (in degrees R)
w = weight or mass flow rate
X = ratio of pressure drop to absolute inlet pressure ($\Delta P/P_1$), dimensionless
X_c = pressure drop ratio for the subject valve at critical flow, with $F_k = 1.0$, dimensionless

FIG. 4-1 (Cont'd)

Nomenclature

Y = expansion factor, ratio of flow coefficient for a gas to that for a liquid at the same Reynolds number, dimensionless

Z = compressibility factor, dimensionless

γ_1 = specific weight, upstream conditions

ξ = damping factor

A/D: Analog-to-digital.

Actuator: A device which accepts the output from a control system and moves a final control element (usually a valve) to change a process condition. See also "Final Control Element."

Adaptive Control: Method of control whereby tuning (response) of the control system is varied with the process conditions, unlike other control where tuning is manual and remains constant.

Algorithm: Mathematical representation of the action performed by a controller such as proportional, integral, derivative, or combinations of those modes.

Alphanumeric: A character set that contains both letters and digits and perhaps other characters such as punctuation marks.

Analog Computer: A computing device comprised of functional modules such as amplifiers, multipliers, dividers, etc., interconnected in such a way as to facilitate the solution of a set of mathematical expressions or to implement some control strategy. The input to and the output from an analog computer are continuous signals as contrasted with a digital computer which updates an output every scan.

Attenuation: An increase or decrease in signal magnitude between two points or between two frequencies.

Baud Rate: The number of bits or discrete pieces of information transmitted per second.

Bit: Abbreviation for "binary digit." A single character in a binary number, represented by zero (0) or one (1).

Byte: The number of adjacent binary digits operated upon as a unit.

Cascade Control: Controllers arranged such that the output of one controller manipulates the setpoint input of a second controller instead of manipulating a process variable directly.

Control Action, Derivative (Rate): Control action in which the controller output is proportional to the rate of change of the input.

Control Action, Integral (Reset): Control action in which the controller output is proportional to the time integral of the error signal.

Control Action, Proportional: Control action in which the controller output has a linear relationship to the error signal.

Controller: A device which receives a measurement of the process variable, compares that measurement with a setpoint representing the desired control point, and adjusts its output based on the selected control algorithm to minimize the error between the measurement and the setpoint. If an increase in the measured process variable above the setpoint causes an increase in the magnitude of the controller output, the controller is said to be "direct acting." If a process variable increase above the setpoint causes a decrease in the magnitude of the controller output, the controller is "reverse acting."

Data Base: A collection of values for process variables, setpoints, scaling factors, control parameters, limits, constants, identifiers, etc. for access by the application programs in a computer-based control system.

Data Highway: A high-speed serial or parallel data path which connects several units of a distributed control or data collection system.

DDC: **Direct Digital Control**. A control technique in which a digital computer is used as the sole controller and its output is used to set the final control element. This is in contrast to supervisory control.

Dead Band: The range through which an input may vary without changing the output. In a mechanical instrument such as a meter movement or strip-chart recorder, the dead band is caused by friction and slack or "play" in the readout mechanism. In a controller, dead band is a zone around the setpoint in which the measurement may vary without initiating a compensating controller response.

Dead Time: The interval of time lag between the initiation of a controller output or stimulus and the start of the resulting observable process response.

Dedicated Control: Using one controller to control one process variable.

Derivative Control: A mode of control using an algorithm which anticipates when a process variable will reach its desired control point by sensing its rate of change. This allows a control change to take place before the process variable overshoots the desired control point. See also "Control Action, Derivative (Rate)."

Derivative Time: The time difference by which the output of a proportional-derivative (PD) controller leads the controller input when the input changes linearly with time.

Digital Computer: An electronic machine for performing calculations on discrete quantities of data. Usually includes bulk storage devices such as disks, tape units, etc., in addition to internal memory. Also includes devices for printing and/or displaying output data.

Distributed Control System: Any control system in which the degradation or failure of any single element will affect only the control loop, or related loops, in which it operates.

EPROM (Erasable Programmable Read-Only Memory): A memory device with information placed into it during manufacture that cannot be altered by the computer. It can only be erased and reprogrammed with special equipment.

Error Signal: The signal resulting from the difference between the setpoint reference signal and the process variable feedback signal in a controller.

Feedback Control: A type of control whereby the controller receives a feedback signal representing the condition of the controlled process variable, compares it to the setpoint, and adjusts the controller output accordingly.

Feedforward Control: A type of control which takes corrective action based on disturbances before the process variable is upset.

Final Control Element: That component of a control system (such as a valve) which directly changes the manipulated variable.

Gain: The ratio of change in output divided by the change in input that caused it. Both input and output must be in the same units; hence gain is a dimensionless number.

Hierarchy: The ranking or precedence of the elements in a supervisory system. For example, a lower ranking element such as a local controller affects only one variable while a

FIG. 4-1 (Cont'd)

Nomenclature

higher ranking element such as a computer might affect many variables.

Hysteresis: Difference between upscale and downscale output in instrument response when subjected to the same input approached from opposite directions.

Integral (Reset) Control: A control algorithm which attempts to eliminate the offset (caused by proportional control) between the measurement and setpoint of the controlled process variable. See also "Control Action, Integral (Reset)."

Integral (Reset) Time: The proportionality constant in the equation relating the controller output to the error for integral control $CO = K_i\int(PV - SP)\,dt$.

Where: $K_i = K_p/T_i$. K_p is the integral gain of the controller. T_i is the time required to produce a change in controller output equal to the change in error input.

Integral Windup/Windown: Also called "controller windup/windown" or "reset windup." Saturation of the controller output at its maximum positive or negative value due to an error signal existing for an excessive period of time. Can be caused by the controller being left on "automatic" when the measurement transmitter is out of service.

Intrinsically Safe: Refers to equipment or wiring which is incapable of releasing sufficient electrical or thermal energy under either abnormal or normal conditions to cause ignition of a specific hazardous atmospheric mixture in its most easily ignited concentration.

I/P Transducer: (Current-to-pneumatic). A device which converts an electrical current signal to a proportional pneumatic signal for the purpose of interfacing electronic and pneumatic parts of a control system. A typical I/P transducer might convert a 4-20 mA signal from an electronic controller to a 3-15 psig signal to actuate a pneumatic valve.

I/O Devices: Input/output devices used to enter data into and receive data from a computer or control system. Examples are analog and digital input and output devices for handling process measurements and conditions as well as "business" type devices such as terminals, printers, plotters, etc.

Noise: In process instrumentation, an unwanted component of a signal or variable. Noise may be expressed in units of the output or in percent of output span.

Offset: The steady-state deviation of the controlled variable from the set-point, usually caused by a disturbance or a load change in a system employing a proportional-only controller such as a level controller. Offset will eventually be reduced to zero by the integral action in a PI or PID controller.

P Controller: A controller which produces proportional control action only.

Parallel Data: Data transmission where all data bits of a data word are processed at once.

PD Controller: A controller which produces proportional plus derivative (rate) control action.

PI Controller: A controller which produces proportional plus integral (reset) control action.

PID Controller: A controller which produces proportional plus integral (reset) plus derivative (rate) control action.

PROM (Programmable Read-Only Memory): A device with information placed into it during manufacture that cannot be altered by the computer. It can, however, be reprogrammed using special equipment.

Proportional Band: The change in the controller error signal required to produce a full range change in output due to proportional control action. It is the reciprocal of gain expressed as a percentage: $PB(\%) = 100/k$.

Proportional Control: A mode of control using an algorithm which causes the output of a controller to change in a linear fashion as the error signal (process variable – setpoint difference) changes. See also "Control Action, Proportional."

RAM (Random Access Memory): Memory which contains no pre-programmed information but is loaded and/or altered by the computer system. It is of a "volatile" nature in that all the contents are lost when electrical power is removed. RAM memories are usually provided with battery backup power systems, making it "non volatile."

Ramp: An increase or decrease of a variable at a constant rate of change with respect to time.

Reset Rate: The inverse of integral time; usually expressed as "repeats per minute."

ROM (Read-Only Memory): Memory with information placed into it during manufacture that cannot be altered.

Serial Communications: Sending bits of information in succession along a single circuit (pair of wires).

Setpoint: The desired value at which a process variable is to be controlled.

Software: A set of programs and associated data tables which causes the hardware components of a computer system to perform the desired tasks.

Split-Ranging: Action in which two or more final control elements are actuated by a single controller output. For example, in a heating circuit, 0-50% of the controller output operates a primary heat source and the 50-100% portion of the controller output operates a secondary heat source.

Steady-State: The condition when all process properties are constant with time, transient responses having died out.

Supervisory Control: A method of computer control whereby a computer or master station provides setpoints to individual controllers which independently perform the actual control algorithms.

System Control Diagram: A diagram used to define the process functionality to achieve the overall operating and control philosophy.

Telemetry: A technique which permits a measured quantity to be transmitted and interpreted at a distance from the measuring location. Form, or types of telemetry include analog, digital, frequency, and pulse.

Transmitter: A device that converts a process measurement (pressure, flow, level, temperature, etc.) into an electrical or pneumatic signal suitable for use by an indicating or control system.

Word, Computer: A group of bits treated as a unit and capable of being stored in one computer location. Some common word lengths are 8 bits, 16 bits, and 32 bits.

GENERAL INSTRUMENTATION CONSIDERATIONS

Type Selection

Often the type selection of an instrument is pre-determined by whatever is available, or what will be compatible with the rest of a system. There are cases, however, where the choice to install pneumatic or electronic instrumentation must be made by comparing the features of each type. Fig. 4-3 lists some of the attributes of each type to aid in this comparison.

Identification

An instrument may perform a single function such as a temperature indicator (TI), or a combination of functions such as a flow recording controller (FRC). Fig. 4-2 covers the common symbols on process and mechanical flow sheets, also called Piping and Instrument Diagrams (P&IDs). Table 1 in Fig. 4-2 shows the accepted Instrument Society of America (ISA) letter designations and their meanings when used in instrument identifications. Special identification requirements may be encountered in certain applications, e.g., offshore requirements of API-RP 14-C. Instrument Society of America publication ISA-S5.1, "Instrumentation Symbols and Identification," should be referred to for more detailed information.

PNEUMATIC POWER SUPPLIES

The pneumatic power supply is more commonly known as the instrument air system. The main considerations of an instrument air system are:

1. Adequate Capacity: The minimum capacity of the system should be the sum of the individual requirements of each air-consuming instrument in the system, plus a supplemental volume for purges, leaks, additions, etc. If accurate consumption figures are not available, an estimated consumption volume of 0.5 cubic foot per minute for each air-consuming device is usually adequate. The air storage tank should have sufficient capacity to maintain this rate for about five minutes or such time as is considered adequate to perform an emergency shut-down of the plant or to switch over to a backup air system. Also the air storage tank capacity should be large enough to prevent excessive cycling of the compressor.
2. Filtering and Regulation: Instrument air systems are normally designed for pressures up to 125 psig and should be protected by relief valves. Instrument air should be free from all contamination such as oil, water, and any hazardous or corrosive gases. Non-lubricated compressors should be used if possible. Where lubricated compressors are used, an oil removal separator is required. The presence of oil may cause instrument contamination and possibly create a combustible mixture. After being compressed, instrument air must be cooled to remove the major portion of the contained water. A final drying system must be used to reduce the water dewpoint to at least 10°F below the ambient temperature at line pressure. An afterfilter may be required to remove particulate carryover from the dehydrators.
3. Proper Distribution: The air distribution system should be free of any "pockets" where liquid could accumulate. If this is not possible, drain valves should be installed. All supply lines should connect to the top of the air manifold or "header." Instrument air filter-regulators should be provided at each air-consuming device to reduce the line pressure to the supply pressure recommended by the instrument manufacturer. This also provides one more stage of protection from contaminants. Instrument Society of America Standards ISA-S7.3 and ISA-S7.4 are references for additional information.
4. Non-Air Systems: Natural gas has been used instead of instrument air in some remote installations where compressed air was not available. This practice should be avoided if at all possible due to safety and pollution problems and the additional filtering and clean-up of the gas which must be done to protect the instruments. The user must be cognizant of all applicable regulations when considering the use of any combustible gas in instrumentation service. Some small-scale systems have used bottled nitrogen for instrument gas. This is quite acceptable, but non-bleed type instruments should be used to keep the consumption to a minimum.
5. Hydraulic Powered Devices: Hydraulic actuators are sometimes used on valves or rams where very high thrusts (up to 50,000 pounds force) are required for operation. Due to the problems of transmitting very high pressure signals, a local pump powered by an electric motor is often used to form what is commonly known as an "electro-hydraulic actuator."

ELECTRONIC POWER SUPPLIES

Installation and interconnection wiring requirements are regulated by the National Electrical Code (NEC) Article 500 (Hazardous Locations) and Article 725 (Remote Control & Signal Circuits). Special attention should be given to Article 725. The requirements pertaining to physical protection of wiring, isolation and spacing of conductors depending upon class, and minimum wire sizes are often overlooked in an instrumentation installation.

Power Outages and Interruptions

It is usually the responsibility of the consumer, not the electric utility company, to provide protection for connected electronic equipment against upsets such as voltage spikes caused by lightning, high or low voltage surges, etc. The frequency of power outages and average time for service to be restored should be determined to assist in the design of electronic power supply protection and battery backup systems. The power company should be able to provide data about their reclosure gear (equipment which attempts to restore service after a current surge has tripped the substation or sectionalizing breakers). Also, a record of power outages in the local substation area and storm frequency charts will be very useful. A typical reclosure operation description is shown in Fig. 4-4.

Example 4-1 — If a plant can tolerate loss of power to its electronic equipment for six seconds, and an average of 50 power outages per year is expected, then, according to Fig. 4-4, 84% of those outages will be restored on the first reclosure attempt, and the remaining 16% or approximately eight power outages per year can be expected to disrupt plant operations. Note: Storm frequency charts are often available from manufacturers of surge arresting devices. These charts may be used in case power outage records are not available from the power company. Climatic data for a particular area may be obtained from the National Oceanic and Atmospheric Administration (NOAA) in Asheville, North Carolina.

FIG. 4-2

Instrumentation Symbols

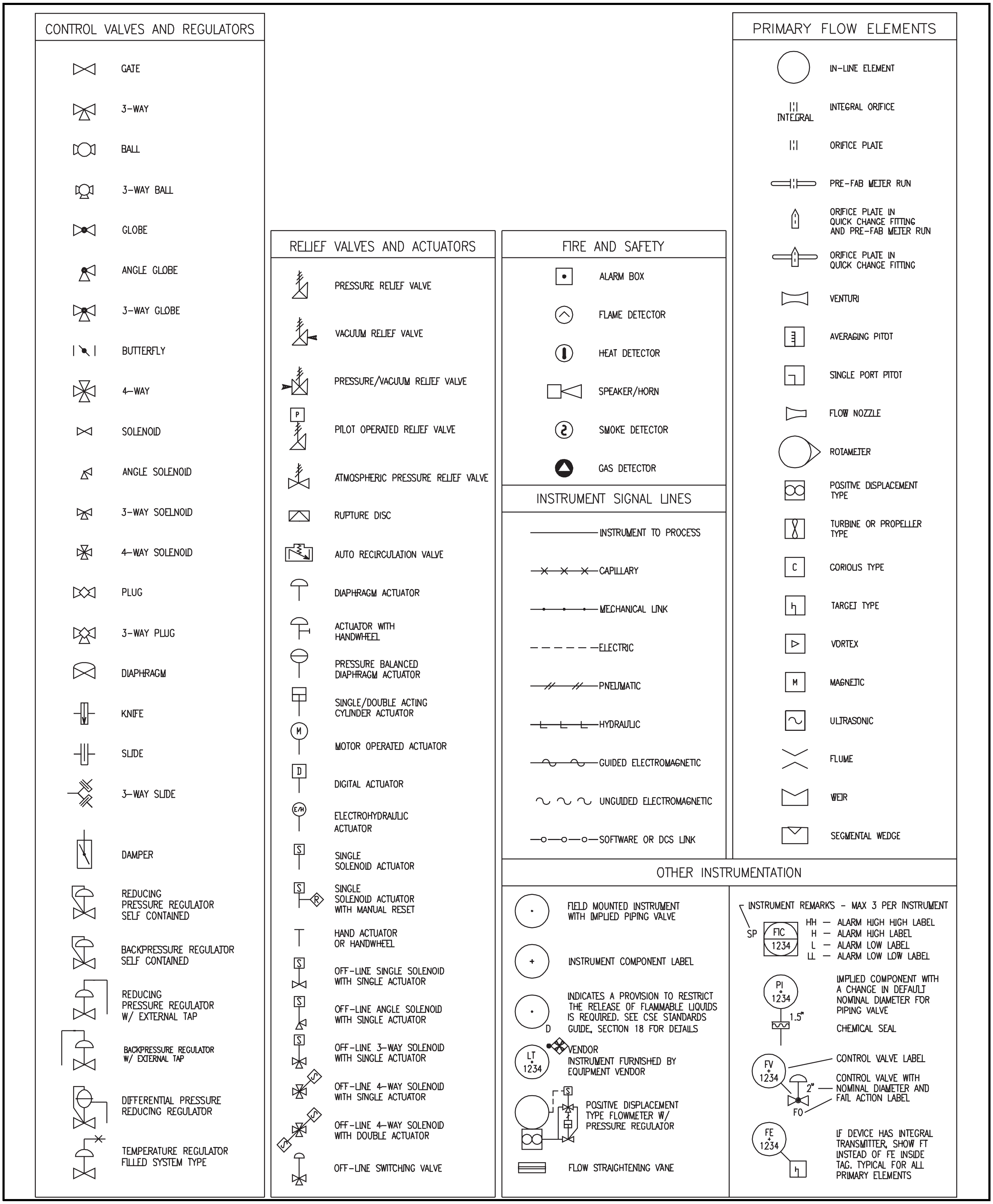

FIG. 4-2 (Cont'd)

Instrumentation Symbols

INSTRUMENT OR FUNCTION SYMBOLS

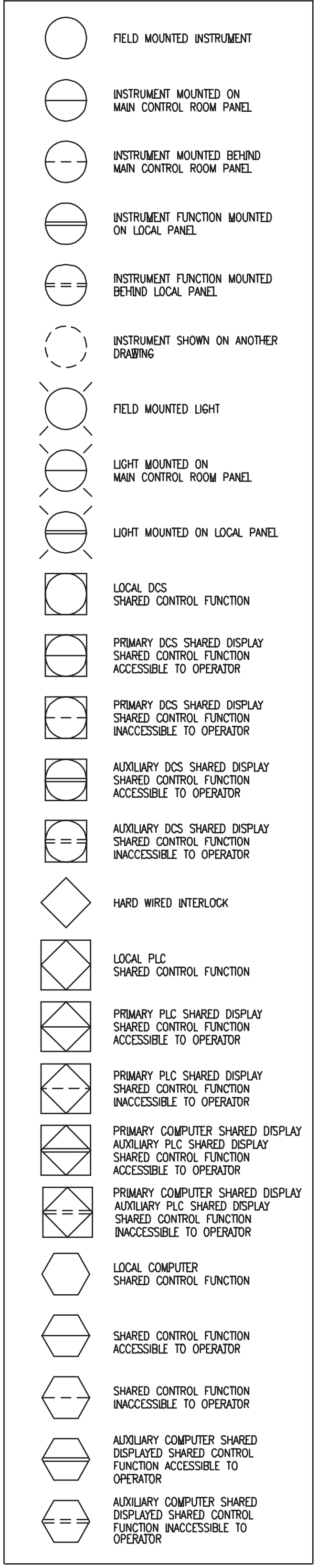

INSTRUMENT SYMBOLOGY DEFINITION

MEANINGS OF IDENTIFICATION LETTERS

THIS TABLE APPLIES ONLY TO THE FUNCTIONAL IDENTIFICATION OF INSTRUMENTS

	FIRST-LETTER		SUCCEEDING-LETTERS		
	MEASURED OR INITIATING VARIABLE	MODIFIER	READOUT OR PASSIVE FUNCTION	OUTPUT FUNCTION	MODIFIER
A	ANALYSIS		ALARM		
B	BURNER, COMBUSTION		USER'S CHOICE	USER'S CHOICE	USER'S CHOICE
C	USER'S CHOICE			CONTROL	
D	USER'S CHOICE	DIFFERENTIAL			
E	VOLTAGE		SENSOR (PRIMARY ELEMENT)		
F	FLOW RATE	RATIO (FRACTION)			
G	USER'S CHOICE		GLASS, VIEWING DEVICE		
H	HAND				HIGH
I	CURRENT (ELECTRICAL)		INDICATE		
J	POWER	SCAN			
K	TIME, TIME SCHEDULE	TIME RATE OF CHANGE		CONTROL STATION	
L	LEVEL		LIGHT		LOW
M	USER'S CHOICE	MOMENTARY			MIDDLE, INTERMEDIATE
N	USER'S CHOICE		USER'S CHOICE	USER'S CHOICE	USER'S CHOICE
O	USER'S CHOICE		ORIFICE, OPEN		
P	PRESSURE, VACUUM		POINT (TEST) CONNECTION		
Q	QUANTITY	INTEGRATE, TOTALIZE			
R	RADIATION		RECORD		
S	SPEED, FREQUENCY	SAFETY		SWITCH	
T	TEMPERATURE			TRANSMIT	
U	MULTIVARIABLE		MULTIFUNCTION	MULTIFUNCTION	MULTIFUNCTION
V	VIBRATION, MECHANICAL ANALYSIS			VALVE, DAMPER, LOUVER	
W	WEIGHT, FORCE		WELL		
X	UNCLASSIFIED	X AXIS	UNCLASSIFIED	UNCLASSIFIED	UNCLASSIFIED
Y	EVENT, STATE OR PRESENCE	Y AXIS		RELAY, COMPUTE, CONVERT	
Z	POSITION, DIMENSION	Z AXIS		DRIVER, ACTUATOR UNCLASSIFIED FINAL CONTROL ELEMENT	

NOTE: FOR FURTHER EXPLANATORY NOTES WITH REGARD TO ABOVE TABLE, SEE ANSI/ISA-S5.1 STANDARD ENTITLED "INSTRUMENTATION SYMBOLS AND IDENTIFICATION"

FUNCTION LABELS

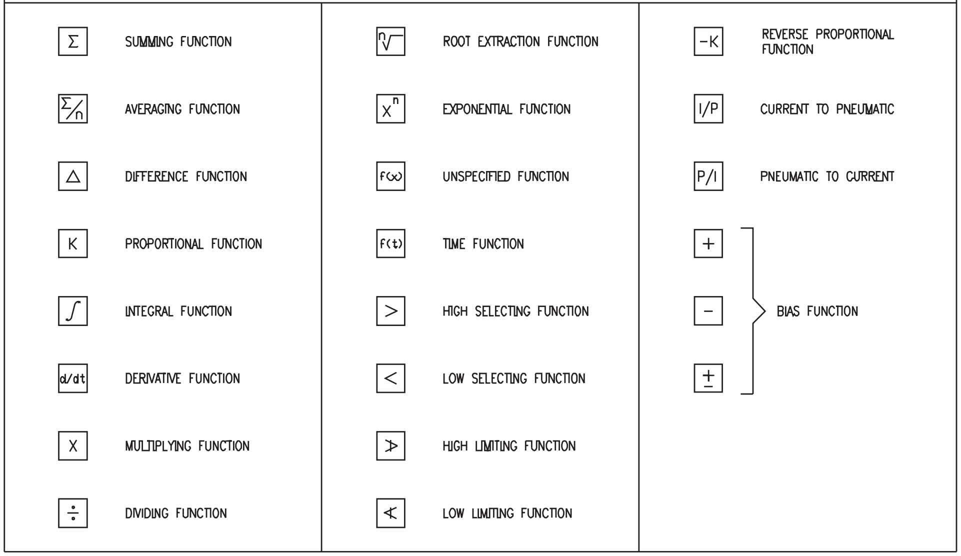

FIG. 4-3

Instrument Type Features

Pneumatic	Electronic
Advantages	
1. Intrinsically safe, no electrical circuits. 2. Compatible with valves. 3. Reliable during power outage for short period of time, dependent on size of air surge vessel.	1. Greater accuracy. 2. More compatible with computers. 3. Fast signal transit time. 4. No signal integrity loss if current loop is used and signal is segregated from A.C. current.
Disadvantages	
1. Subject to air system contaminants. 2. Subject to air leaks. 3. Mechanical parts may fail due to dirt, sand, water, etc. 4. Signal boosters often needed on transmission lines of over 300 feet. 5. Subject to freezing with moisture present. 6. Control speed is limited to velocity of sound.	1. Contacts subject to corrosion. 2. Must be air purged, explosion proof, or intrinsically safe to be used in hazardous areas. 3. Subject to electrical interference. 4. More difficult to provide for positive fail-safe operation. 5. Requires consideration of installation details to minimize points 1, 2, 3, and 4.

FIG. 4-4

Typical Reclosure Gear Operation for Power Outages of Commercial Utilities

Reclosure Attempt	Time	% Successful
First Reclosure	0.1 sec or less	84
Second Reclosure	15-45 sec	10
Third Reclosure	120 sec	1.5
Manual Intervention	–	4.5

Power Supply Specifications

Three manufacturer specifications which should be carefully noted are: (1) regulation, (2) ripple, and (3) short-circuit protection. Regulation is an indication of how well power supply output voltage remains constant as the electrical load is removed and re-connected. Good regulation implies no interaction between connected devices on the same power supply. Ripple is the amount of AC variation on the DC output with a constant load on the power supply. This is especially critical when the outputs of transmitters are connected to analog-to-digital (A/D) converters in a computer or microprocessor based installation. For example, if the A/D precision allows resolution to the nearest 10 millivolts, power supply ripple should be less than 1/3 of this or 3.3 millivolts, unless the noise can be rejected by the converter. Short-circuit protection is a means by which the power supply current is limited at a safe maximum in case the output is accidentally shorted-out at some point. All power supplies should include short circuit protection to prevent serious damage. Power supplies should always have the common side of the output separate from chassis ground to permit the common to be grounded at a single point to a "high quality" instrument ground.

Uninterruptible Power Supplies

Uninterruptible Power Supplies (UPS), often referred to as battery back-up systems, should be sized to span the third reclosure time if power supply levels must be maintained to minimize erratic plant behavior. However, if the instrument air compressor is driven by an electric motor, it usually is not beneficial to maintain battery power past the time the air supply is depleted. All instrument needs required for an orderly shutdown should be considered. Back-up power is most economically provided by "floating" the batteries across the output of the DC power supplies. The circuits should be designed to prevent over-charging or under-charging of the batteries as well as to prevent damage to the regulator circuits when the AC input is disrupted. If the AC input power must be backed up, batteries are used to feed an inverter which transforms DC power into AC power of the proper voltage and frequency. Static switches are available to automatically switch the power supply input from the normal AC line to the inverter when AC line power is lost. Manufacturer recommendations for environmental requirements must be observed to assure reliability of electronic power supplies, static switches, etc. Regular maintenance of battery systems is mandatory since batteries have a limited life-span compared to other electronic components and terminal corrosion may cause problems. Standby generators may be required in some installations to permit instrument operations to continue beyond the time limit of the battery system. Additional information on standby power systems is included in Section 16.

SENSING DEVICES

Some of the more common types of sensing devices for the measurement of process variables are described as follows:

Pressure Sensors

Manometer (Fig. 4-5) — Two different pressures are applied to two separate openings in a transparent vessel containing a liquid. The difference in the heights of the liquid is used as a measure of the differential pressure. This difference should be corrected for temperature and gravity of the liquid in the manometer (usually either water or mercury). Pressures are often expressed in units such as "inches of water" or "millimeters of mercury."

Bourdon tubes (Fig. 4-6) — A Bourdon tube is a metallic coil constructed from a metal tube having the desired elastic quality and corrosion resistance. The tendency of the tube to straighten under pressure causes a mechanical linkage to move a pointer or initiate pneumatic or electronic transmission of the measured pressure. Dampners should be used where pulsation is a problem. Condensate traps should be used upstream of the device in steam service. The pressure indicated is "gauge" pressure which is relative to that of the surroundings. Bourdon gauges are also available as "compound" types which indicate vacuum as well as positive pressure.

Bellows (Fig. 4-7) — A tubular device with pleated sections somewhat like an accordion. It is flexible along its axis and lengthens or shortens according to the applied pressure. The bellows is usually used in low pressure or vacuum service but types are available for use with high pressures (up to several thousand psi). Typical diameters range from 1/2" to 12". They are often used in force-balance type transmitters and other applications where small displacements are required. Like the Bourdon tube, it indicates pressures as "gauge" or relative to its surroundings.

FIG. 4-5

Types of Manometers

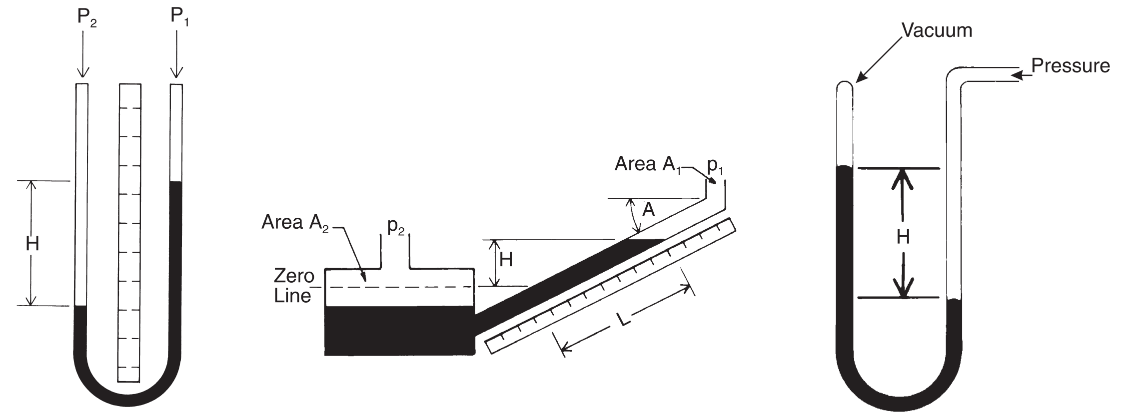

(a) U-Tube Manometer Most Common Type.

(b) Inclined Tube Manometer Used for Low Pressure Differentials Such As Furnace Drafts.

(c) Absolute Pressure Gauge Used as a Barometer Or For Measuring Sub-Atmospheric Pressures

FIG. 4-6

Types of Bourdon Tubes

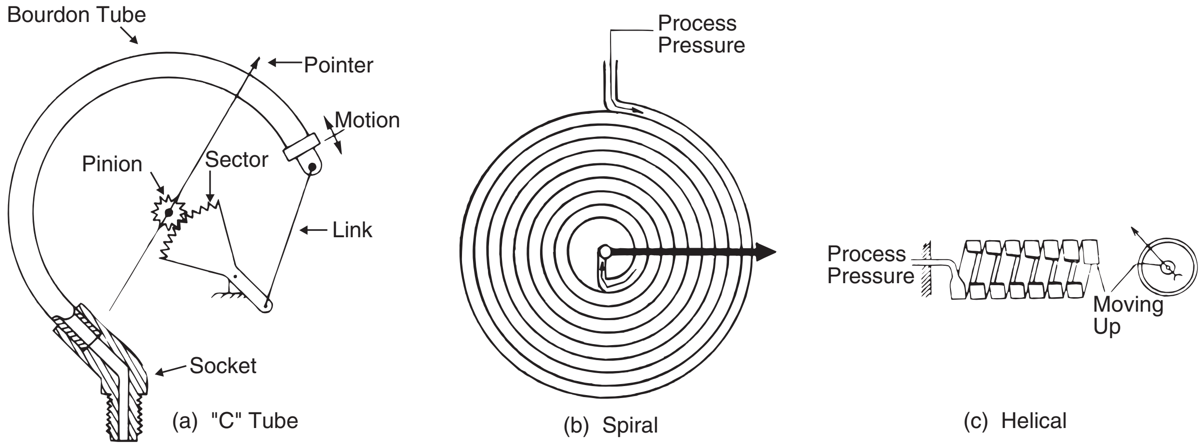

(a) "C" Tube

(b) Spiral

(c) Helical

FIG. 4-7

Types of Bellows

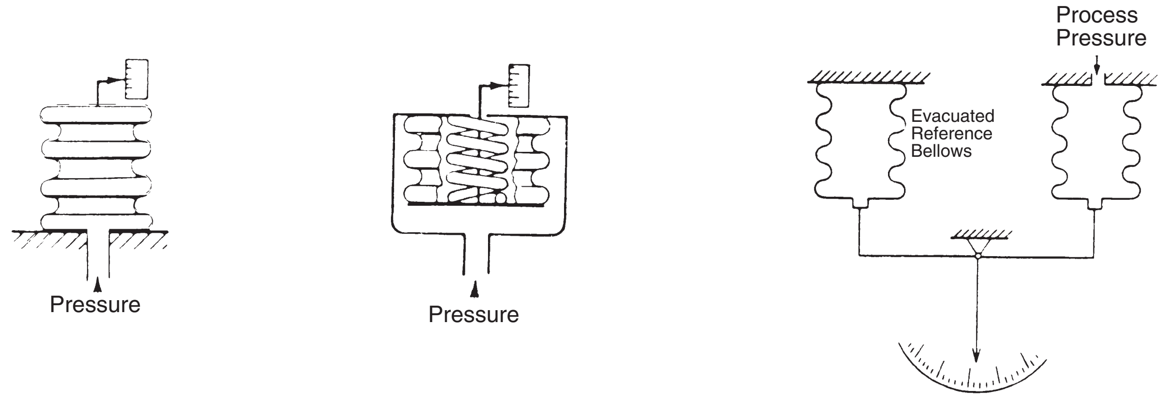

(a) Unopposed

(b) Spring-loaded

(c) Beam Balance Sensor

Diaphragm (Fig. 4-8) — A flat or curved seal with a link attached to an indicator or transmission device. A diaphragm may have its own deflection properties such as with a metallic type or it may be attached to a spring or other elastic member such as with non-metallic diaphragms.

Electrical Pressure Transducers

The primary sensing element of many electrical pressure transducers usually takes the form of a Bourdon tube, bellows, or diaphragm to generate a movement which is transmitted to a strain gauge. A strain gauge is a device using resistance wire connected in a Wheatstone bridge configuration to generate an electrical signal proportional to the movement and hence proportional to the process variable being measured. Other types of electrical pressure transducers use properties of inductance, capacitance, or magnetic coupling to convert a pressure measurement to an electrical signal.

Level Sensors

Gauge glass (Fig. 4-9) — This is the most commonly used visual process-level device. Gauge glasses are generally classified as either transparent or reflex types. A transparent gauge glass consists of either a glass tube or an arrangement of flat glass plates in some type of holder. Since the process fluid level is viewed directly, the transparent gauge glass is normally used with opaque fluids. The reflex type has reflecting prisms to aid in viewing transparent fluids. Caution should be observed when handling and installing these and/or any tempered glass instrument. Scratches or chips can reduce the strength of the glass and cause safety problems.

Chain and tape float gauges (Fig. 4-10) — Used in large, unpressurized storage tanks where the entire full-to-empty range must be measured.

Lever and shaft float gauges (Fig. 4-11) — Used on either unpressurized or pressurized vessels where only a small range of level must be measured. The range of measurement is determined by the length of the float arm, but usually is between a few inches and a few feet.

Displacer level measuring device (Fig. 4-12) — One of the most frequently used level measuring devices is the torque tube displacer. It is attached to the free end of a torque tube which has elastic properties that permit it to twist as the displacer tries to float. This slight turning of the free end of the torque tube is connected to an indicator or transmitter. Torque tube displacement gauges are normally limited to level spans of ten feet.

Head-pressure level gauges (Fig. 4-13) — The true level of a liquid can be determined by dividing the measured hydrostatic head by the density of the liquid. This method requires a knowledge of the densities of all phases of the liquid. Some of these methods are: pressure gauge, bubble tube, and differential pressure measurement. The bubbler (Fig. 4-13a) is used at vacuum and low pressures and is especially good for services such as molten sulfur and dirty liquids. In "boiling-liquid" service (Fig. 4-13b), a condensate trap must be used on the vapor leg. The level of trapped condensate in the vapor leg will usually be different than the vessel liquid level, requiring compensation of the transmitter.

Electrical type level gauges and switches (Fig. 4-14) — Two common types of level gauges are the float-magnetic gauge configuration and the conductive type shown in Fig. 4-14. Slight tension on the tape reel permits the follower magnet to track the float at the liquid level in the device in Fig. 4-14a. The position of the reel represents the level and is either connected to an indicating device or a transmitter. The device shown in Fig. 4-14b illustrates the use of a conductive fluid for high and low level alarm indication.

Capacitance probes (not illustrated) — A continuous method of level measurement based on electrical properties. This method uses an electrode placed inside a vessel (or in a protective shell inside the vessel). The capacitance between the electrode and the wall of the vessel or shell varies as the dielectric constant varies. The dielectric in this case is the fluid, hence the capacitance varies in proportion to the liquid level. This capacitance is then measured, and converted to a level measurement to be indicated or transmitted.

Other methods — Some of the other level detection methods use principles of:

1. Absorption of nuclear radiation as in a gamma gauge.
2. Absorption of ultrasonic waves.
3. Viscosity of the liquid.
4. Thermal conductivity and expansion.

FIG. 4-8

Diaphragm Pressure Elements

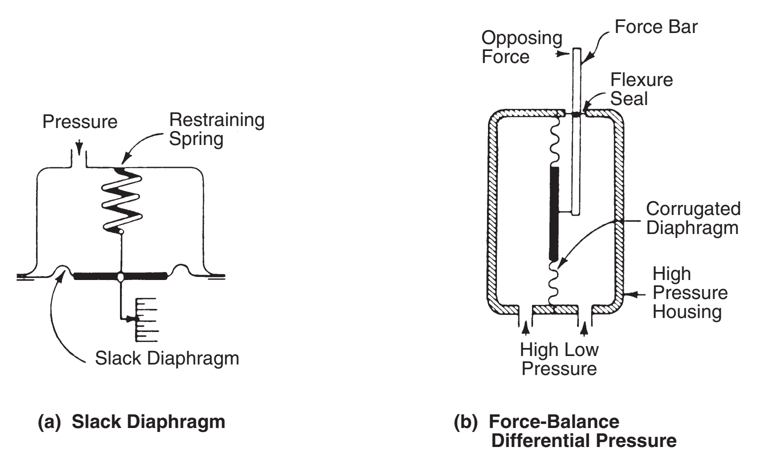

(a) Slack Diaphragm

(b) Force-Balance Differential Pressure

FIG. 4-9

Flat Glass Gauge Glasses

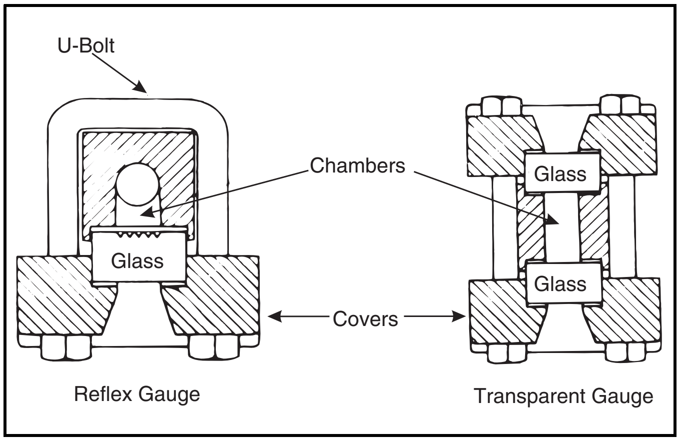

FIG. 4-10

Chain and Tape Float Gauge

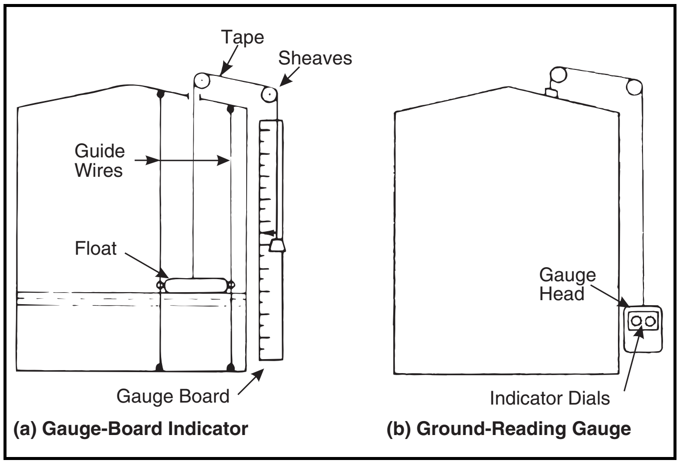

(a) Gauge-Board Indicator **(b) Ground-Reading Gauge**

Temperature Sensors

Thermocouples — An ordinary thermocouple consists of two different kinds of wires (dissimilar metals) joined together at one end to form the measuring or "hot" junction. Where the free ends are connected to the measuring instrument, a reference or "cold" junction is formed. The millivolt readings measured by the instrument represent the difference in the temperatures of the two junctions and can be converted to temperature by various methods using conversion data from thermocouple tables. The reference temperatures normally used to generate thermocouple tables are 32°F and 70°F. Fig. 4-15 shows some of the common thermocouple types, their usable temperature ranges, and the materials of construction.

Thermocouples used for process measurements are usually protected by a thermowell. The mass of the thermowell should be kept to a minimum in the interest of faster response. The thermocouple must be in thermal contact with the thermowell. This is accomplished by the use of a thermally conductive lubricant or physical contact between the thermocouple and the well. In many measurement and control applications, electrical grounding of the thermocouple at the measurement point must be avoided.

FIG. 4-11

Lever and Shaft Float Gauge

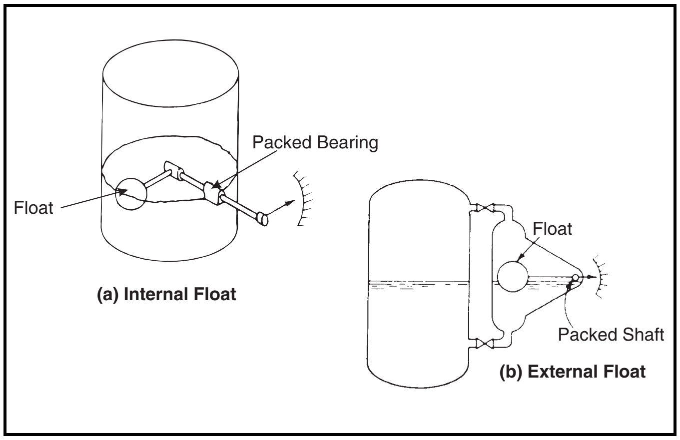

(a) Internal Float **(b) External Float**

FIG. 4-12

Displacer Level Measuring Device

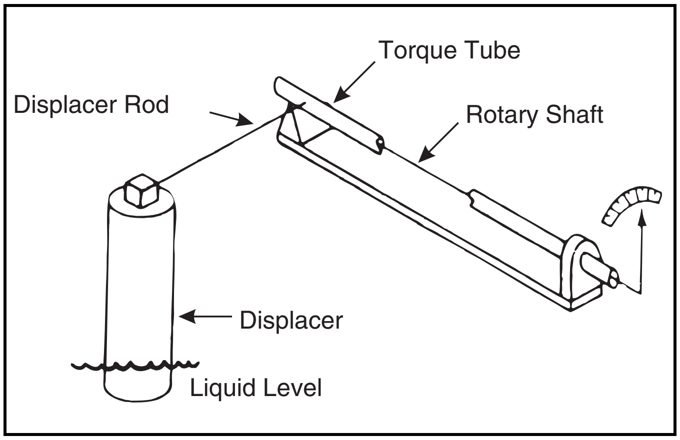

FIG. 4-13

Head Pressure Level Gauges

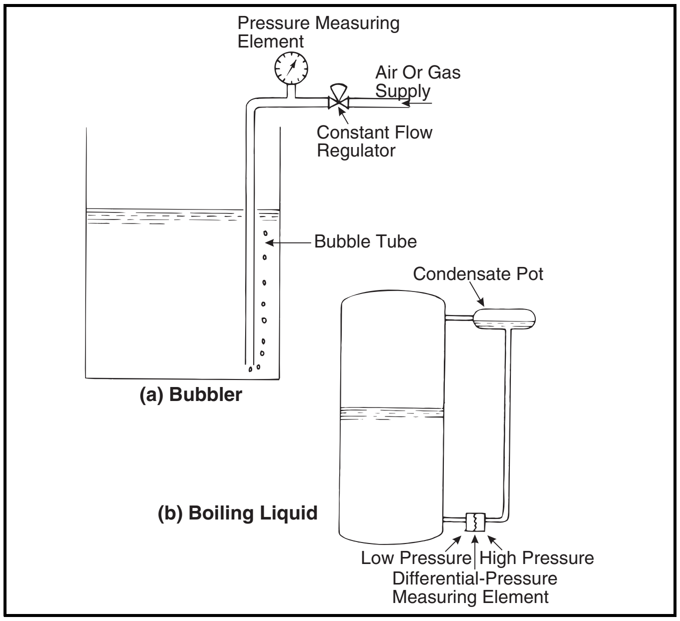

(a) Bubbler **(b) Boiling Liquid**

In applications other than a laboratory environment, maintaining a reference junction temperature is not practical. Therefore, the reference junction is usually at or a part of the measuring instrument where the reference temperature can be measured and compensated for the measurement circuits. Various series arrangements of thermocouples may be made to obtain differential temperatures or temperature averages.

Qualified personnel may check indicating or recording temperature devices measuring thermocouple potentials using portable equipment compatible with the thermocouple and with compensating circuitry identical to the primary device. The use of incompatible equipment could result in erroneous results, especially in low temperature applications. At low temperatures, extreme care must be taken to eliminate sources of moisture in thermocouple installations. Common properties for different types of thermocouples are given in Fig. 4-15. Conversion tables for converting millivolts to temperatures can be found in NBS Circular #561, or obtained from thermocouple suppliers for common types.

Resistance thermometers — These are often called RTD's for "Resistance Temperature Devices." Since the resistance of metals changes as the temperature changes, a resistance thermometer can be constructed using this principle. The metals that fit a near linear resistance temperature relationship requirement best are platinum, copper, and nickel. An accurate resistance measuring device utilizing a Wheatstone bridge is calibrated in units of temperature rather than resistance. RTD's are used in applications where faster responses and greater accuracies are required than may be obtained with thermocouples. Also RTD's have a fairly high electrical output which is suitable for direct connection to indicators, controllers, recorders, etc. The use of RTD's may also be more economical in some installations since the extension wires may be of copper rather than the more expensive thermocouple extension wire. A reference temperature source is not required for calibration. A special class of resistance thermometer is the thermistor device. It is low in cost, has fast response, and is very stable, but is limited to use at temperatures below 600°F.

Filled-system thermometers — These are simple, reliable, low cost devices. A bulb is attached to a capillary tube which is connected to a measuring element (bellows, Bourdon tube, etc.) in an indicating or transmitting device. The system is filled with a liquid or gas which changes in volume or pressure as the temperature of the bulb changes. The length of the capillary run is normally less than 250 feet.

Glass stem thermometers — These devices are normally used in the office, laboratory, or other non-process areas. Breakage is a problem; accuracy is from 0.1 to 2.0 degrees depending upon the range.

Bimetallic thermometers — The sensing element consists of two metals with different coefficients of expansion bonded together and attached to an indicator. These are inexpensive, but not very accurate and are normally used in on-off temperature thermostats where precise control is not required, or in process applications where relative changes are to be monitored. They should be calibrated at or near the normal operating point of the temperature being monitored.

Flow Sensors

Variable head flow meters — Flow meters in this class detect a pressure difference across a flow element specially designed to create that pressure difference. The most common flow element is the orifice plate, but other elements also in use are flow nozzles, venturi tubes, pitot tubes, averaging pitot tubes, target plates, and pipe elbows. Refer to Section 3 for information relating to orifices and orifice plates.

Variable area flow meters (Fig. 4-16) — This type includes the familiar rotameter. The differential pressure across the device is held constant, and the area through which

FIG. 4-14

Electrical Level Gauges/Switches

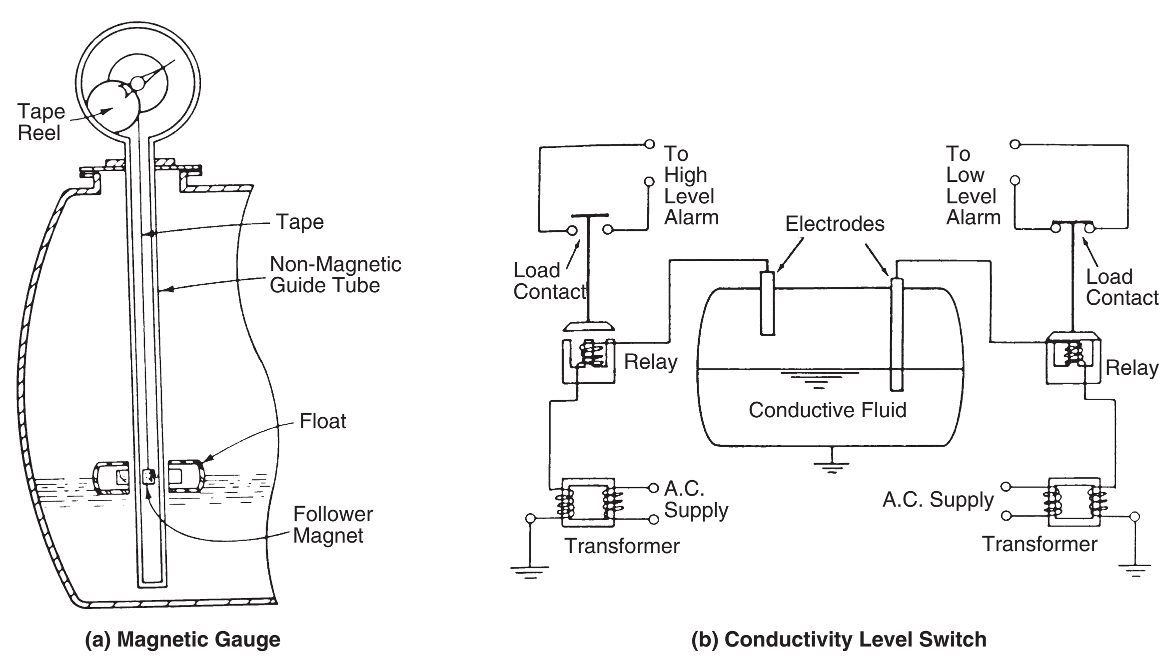

(a) Magnetic Gauge **(b) Conductivity Level Switch**

FIG. 4-15

Properties of Thermocouples

Thermocouple Wires

Limits of Error of Thermocouples for Standard Wire Sizes

Type	Temperature Range, °F	Limits of Error	
		Standard	**Special**
Chromel/Alumel (K)	32 to + 530 + 530 to + 2300	± 4°F ± ¾%	± 2°F ± ⅜%
Iron/Constantan (J)	32 to +530 +530 to +1400	± 4°F ± ¾%	± 2°F ± ⅜%
Copper/Constantan (T)	–300 to –75 –150 to –75 –75 to + 200 +200 to + 700	— ± 2% ± 1½% ± ¾%	± 1% ± 1% ± ¾% ± ⅜%
Platinum/Platinum - 10% Rhodium (S) Platinum/Platinum - 13% Rhodium (R)	32 to +1000 +1000 to +2700	± 5°F ± ½%	— —
Chromel/Constantan (E)	32 to +600 600 to ±1600	± 3°F ± ½%	— —

the fluid passes changes due to the movement of the float up and down the tapered tube. These are usually limited to use with relatively small flows where visual indication is sufficient.

Turbine meters — These use a small permanent magnet mounted on the meter tube to create a magnetic field. A small turbine is mounted inside the tube and turns with a speed proportional to the flow rate. As each vane of the turbine passes through the magnetic field the magnetic flux is disturbed which induces a pulse in a pickup coil mounted on the outside of the meter. The pulse rate is proportional to the flow rate. Pulses are then counted and converted to standard flow units.

Positive displacement meters — Positive displacement meters and metering pumps measure discrete quantities of the flowing fluid. The rotating element is mechanically coupled to a transmitter or counter which integrates or totals the counts to provide an indication in units of gallons, liters, cubic feet, etc. Some common types are: rotating vane, bi-rotor, rotating paddle, oscillating piston, and oval gear meters. They are used for custody transfer devices such as gas meters or gasoline pumps.

Electromagnetic Flowmeter

If an electrical conductor is moved in a magnetic field, an electrical voltage is introduced in the conductor which is perpendicular to both the direction of motion and the magnet field and whose magnitude is proportional to the magnetic field strength and the velocity of the movement. The characterization of the laws of induction also applies to the movement of a conductive fluid in a pipe through a magnetic field and is the basis for the electrostatic flowmeter.

Ultrasonic Flow Meters

Ultrasonic flow measurement is based on sending and receiving acoustic signals through the flow. The difference in transit time between transducers, built in at opposite sides of the pipe gives signals that can be transferred to flow.

A sound wave travels faster with the flow than one propagated against the flow. The difference in transit times is proportional to the medium's mean flow velocity.

By installing more than one pair of transducers, a larger range of the flow profiles across the metering section can be covered and thereby increase the accuracy of the meter.

Other flowmeters — Some other flowmeter types occasionally encountered are:

- Doppler effect or ultrasonic flowmeters
- Vortex shedding flowmeters
- Laser velocimeters

FIG. 4-16

Rotameter

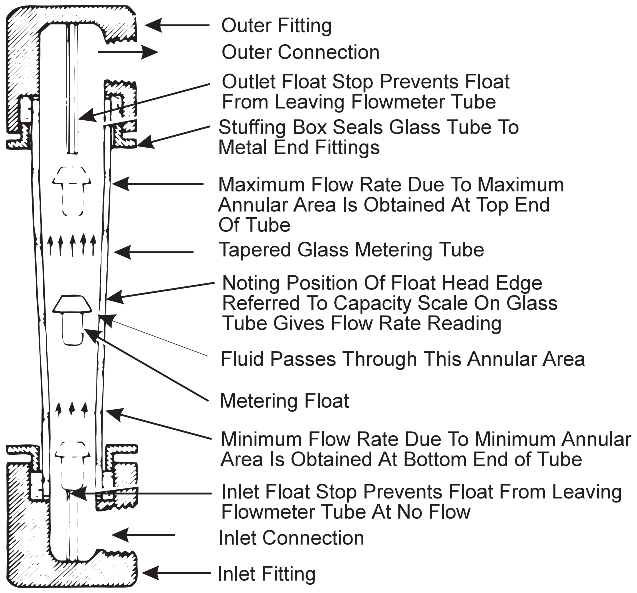

- Thermal meters
- Nuclear Magnetic Resonance meters
- Gas ionization meters
- Cross-correlation devices
- Mass flowmeters

All flow meters should be calibrated using the fluid being measured, or, if a different fluid is used for calibration, the properties of the calibrating fluid must be related to the fluid of measurement.

SIGNAL TRANSMITTERS

Pneumatic Transmitters

A pneumatic transmitter is a device that senses some process variable and translates the measured value into an air pressure which is transmitted to various receiver devices for indication, recording, alarm, and control. The signal range of 3-15 psig is the accepted industry standard; however, other ranges may be encountered. This signal is proportional to the range of measurement of the process variable. For example, 3-15 psig can represent 0-100 psi, 500-1000 gpm, –50 to +50°F, etc.

The prime function of a transmitter is to reproduce the low-energy measurement signal with sufficient energy that it may be transmitted over an appreciable distance or used as a power source to a control device. The low-energy measurement signal is that position or movement associated with the action of the process variable on the sensing element (bellows, diaphragm, Bourdon tube, etc.). Pneumatic transmitters operate in a manner similar to proportional controllers.

Electronic Transmitters

Electronic transmitters perform the same function as pneumatic transmitters: a low energy process-related signal is converted into a higher energy signal suitable to connect to other instruments in the system. The output signal of most electronic transmitters is a 4-20 mA, 10-50 mA, or 1-5 Vdc signal. Other ranges often encountered are: 0-10 Vdc, 2-10 Vdc, and 0.25-1.25 Vdc. Electronic transmitters are also classified as force balance or motion balance types.

Connection Methods — Of great concern to the instrument engineer is the method by which electronic transmitters are connected in the instrumentation system. The “two-wire,” “three-wire,” and “four-wire” classifications are often used to describe the method of connection.

Two-wire transmitters (Fig. 4-17a) — These are the simplest and most economical and should be used wherever load conditions will permit. In a two-wire system the only source of power to the transmitter is from the signal loop. Referring to Fig. 4-18a, the 4 mA “zero-end” current is sufficient to drive the internal circuitry of the transmitter and the current from 4 to 20 mAs represents the range of the measured process variable. The power supply and the instruments are usually mounted in the control room.

Three-wire transmitters (Fig. 4-17b) — Some transmitters require more power than the signal loop (4-20 ma, etc.) can supply to support their internal circuitry. A DC common wire is run from the instrument to the transmitter. This permits the transmitter to draw whatever power it needs from the power supply and produce the desired signal current at the transmitter output.

Four-wire transmitters (Fig. 4-17c) — Some transmitters have their own internal power supply and require no connection to the DC power supply. A 120 vac source is connected directly to the transmitter and its output signal loop is connected only to the receiving instrument. These are often used where an instrument is “added on” to an existing instru-

FIG. 4-17

Connection Methods

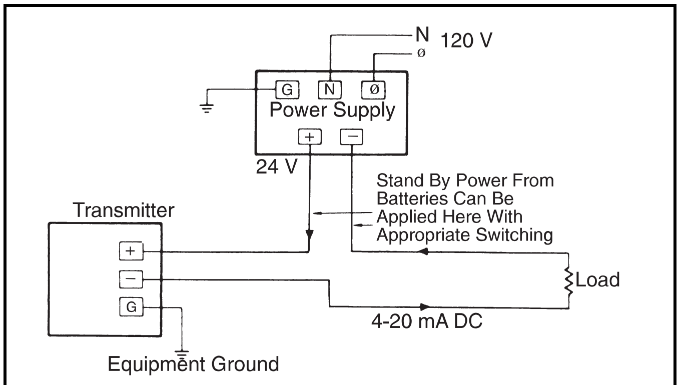

(a) Two-Wire Transmission

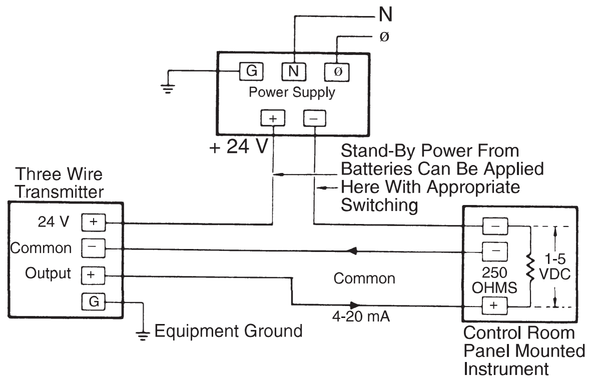

(b) Three-Wire Transmission

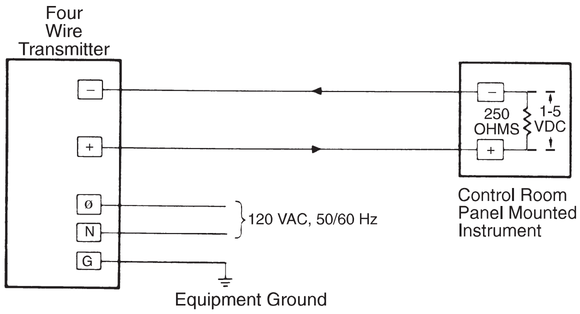

(c) Four-Wire Transmission

mentation installation to avoid adding to the load of the DC supplies. The disadvantage is the need for AC power at the instrument site.

Signal Converters

Signal converters are used either to achieve compatibility between different types of instruments or for isolation purposes. Some common forms of signal converters are:

Pneumatic-to-electronic (P/I) — These are electronic pressure transmitters designed for 3-15 psig input range and the desired output range (4-20 ma, etc.).

Electronic-to-pneumatic (I/P) — I/P converters are pneumatic transmitters with an electro-magnetic device connected to a nozzle-baffle arrangement which generates a pneumatic output signal which is proportional to the input signal.

Isolators — These are usually electronic current-to-current or voltage-to-voltage converters which provide electrical isolation to eliminate unwanted ground loop currents or common mode voltages.

Electric signal converters — These fit the same category as I/Ps and P/Is in that they change the signal from one range to another. Examples are 4-20 mA to 0-10 vdc, 1-5 Vdc to 10-50 mA, etc.

Frequency converters — Frequency to DC converters typically receive pulse inputs from turbines or positive displacement flowmeters and provide a proportional 4-20 ma, 10-50 mA or voltage output. Voltage output converters are often referred to as F/V (frequency-to-voltage) converters or transmitters. V/F (voltage-to-frequency) converters are often used to interface standard "current-loop" type instrumentation to control devices requiring frequency or pulse-train setpoint inputs. These are commonly used in speed indicators for high speed centrifugal equipment.

RECORDERS AND INDICATORS

Recorders

A recorder is a device used to plot the value of one or more measured variables, generally against time, but in some cases against another associated variable or variables. Recorders are often classified in the following ways:

1. According to use, i.e., whether the recorder is an integral part of the measuring/controlling system or is a general purpose type such as would be used in a laboratory or with a chromatograph.
2. According to method used to drive the pen(s). This refers to whether the pen is directly connected to the sensing element or to some type of pen positioning mechanism activated by the measuring signal.
3. According to chart type. This primarily refers to whether the recorder is of the circular or strip chart type and whether the time-axis drive is powered by a mechanical spring, electrical motor, or pneumatic drive.
4. Analog or Digital. Analog recorders are the more familiar strip chart and circular types. Digital recorders include such things as strip printers, data loggers, electronic totalizers, and computer-related devices such as data terminals and printers.

Indicators

An indicator is any device which presents a visual display of a measured quantity such as temperature, pressure, humidity, voltage, etc. Indicators are included in an instrumentation system either as independent devices (denoted as TI, PI, FI, etc.) or as a part of a controlling device (TIC, PIC, etc.). Indicators may be classified in the following groups:

Mechanical type — In these indicators the measured quantity causes the movement of a pointer along a graduated scale. This movement is due to the action of the measured quantity on a diaphragm, bellows, electromagnetic coil, or other sensing device which is mechanically linked to the pointer. This includes pressure gauges, filled tube dial thermometers, voltage and current meters, level gauges, etc.

Electronic analog type — These are analog indicators with no moving parts. A signal from the sensing device activates an optical display attached to graduated scale. A common type uses a bank of 200 tiny gas filled tubes which are illuminated additively in proportion to the magnitude of the process signal. This results in resolution of 0.5% of full scale.

Digital type — Digital indicators include an analog-to-digital converter which changes the electrical process signal to binary format which is then displayed in numerical form. Typical displays consist of light emitting diodes (LED's), liquid crystal displays (LCD's), gas filled tubes, etc.

CONTROL CONCEPTS

Control Loops

A control circuit is commonly referred to as a "loop." A control loop may be classified as either "open" or "closed" depending upon whether the control adjustments are manual settings (open loop) or automatically determined by some type of feedback controller (closed-loop).

Open loop (Fig. 4-18a) — In an open-loop control system, an operator makes a manual adjustment to a device (valve) which controls the flow of a manipulated variable (steam) to attempt to achieve some set-point (desired temperature) value of a controlled variable (hot water). However, this adjustment is only valid for the conditions under which the operator made the adjustment. Any disturbance such as a change in inlet water temperature, steam temperature, heat loss to the surroundings, or throughput will cause the outlet temperature to change.

Closed loop (Fig. 4-18b) — If appropriate measuring and controlling elements are added to the system, the loop is closed by the inclusion of an automatic feedback controller. The controller detects any difference between the set-point and measurement signals (error signal) and produces an output signal to drive the valve in the proper direction to adjust the heat input to cause the measurement to reach the set-point value.

Feedback control (Fig. 4-18c) — The basic components of a feedback control loop are shown in block diagram form in the figure. The "comparator" actually represents the entire controller and any associated signal converters. The "control element" is the valve, the "feedback element" is the transmitter, and the "process" is the mixing of the steam and cold water inside the water heater.

FIG. 4-18

Control Concepts

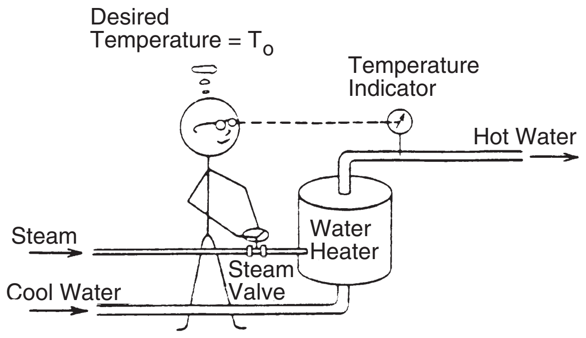

(a) Manual Feedback Control (Open Loop)

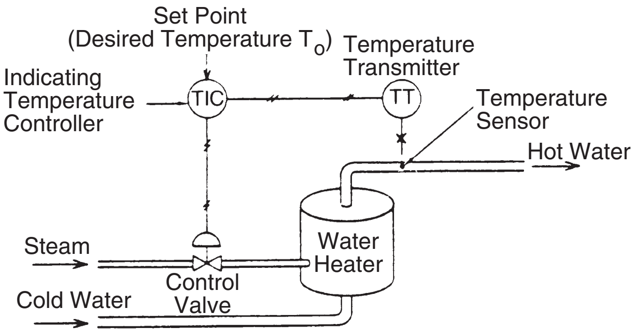

(b) Automatic Feedback Control (Closed Loop)

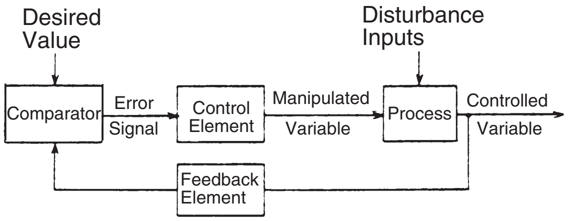

(c) Basic Components Of A Feedback Control Loop

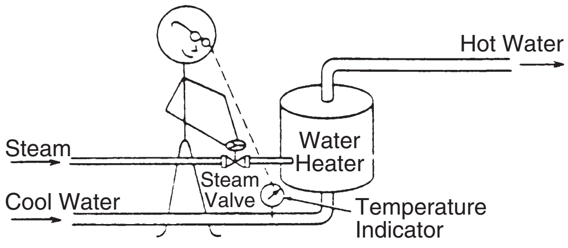

(d) Concept Of Feedforward Control

Feedforward control (Fig. 4-18d) — Feed forward control (often called "Predictive Control") is actually a form of open-loop control. An input variable (cold water temperature) is monitored and the manipulated variable (steam flow) is adjusted accordingly to compensate for changes in the input variable. Feedforward control is almost always used in conjunction with feedback control to overcome the effects of some expected disturbance.

CONTROL MODES AND CONTROLLERS

Basic forms of control action or "modes" used in most process control are: two-position or "on-off" control, proportional control, integral or "reset" control, and derivative or "rate" control. The latter three modes are often used in various combinations with each other.

Two-Position (on-off) Controllers

The simplest form of control action is "on-off" control, in which the controller output either energizes or de-energizes some two-state device such as a relay or an open-shut type valve. The two-position controller is used extensively in home heating and cooling systems, refrigerators, hot water tanks, air compressors, and other applications where the cost of more precise control is not justified. Most two-position controllers are reverse-acting, i.e., when the measured variable is above the set-point, the controller turns the manipulated variable OFF, and when the measured variable is below the setpoint, the controller turns the manipulated variable ON. A "deadband" or differential gap exists around the zero error condition to minimize cycling. This is often implemented as a pair of control points: one where the controller will "kick-on" and the other where the controller will "kick-off" as opposed to a single setpoint.

Proportional, Integral, and Derivative Control Modes

When the cycling nature of "on-off" control cannot be tolerated, a controller using some combination of the proportional, integral, and derivative modes is normally used. The normally used combinations of these modes are: (P) Proportional only; (PI) Proportional plus integral; (PD) Proportional plus derivative; and (PID) Proportional plus integral plus derivative. Integral mode is rarely used alone since it adds lag to the system without the benefits of proportional mode. Derivative mode is never used alone since its output is zero except when the error signal (PV – SP) is changing. Fig. 4-19 shows the response of each mode to illustrated error signal.

Direct and Reverse Acting Controllers

The error signal term (PV – SP) indicates "reverse" controller action (the controller output decreases when the measurement increases). Most controllers may be switched from one type of action to the other, and the choice depends upon the action of the final control element and the direction that the measured controlled variable responds to the manipulated variable.

Proportional Mode (P)

The "proportional-only" mode is the simplest of the three modes of control. It is characterized by a continuous linear relationship between the error signal (PV – SP) and the controller output.

FIG. 4-19

Responses of Proportional, Integral, and Derivative Control Modes to Various Process Inputs and Disturbances

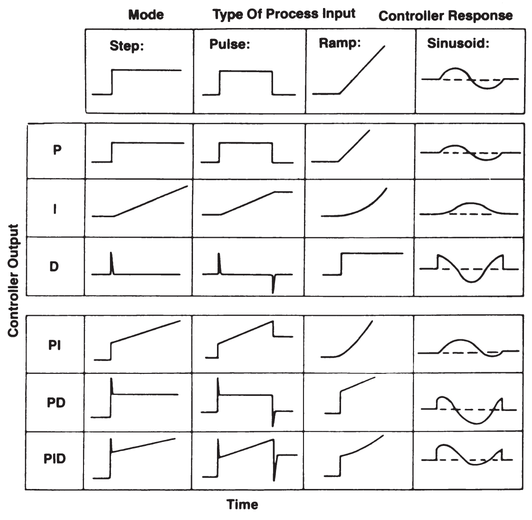

The proportional controller is simple, inexpensive, and does not introduce any additional time lags into the control system. Its chief disadvantage is its inability to cope with load changes.

In the expression:

$$CO = K_p (PV - SP) + MO \qquad \textbf{Eq 4-1}$$

the term MO represents the controller output while on "manual" (just before the controller is switched to "automatic"). Thus MO is the controller output required to maintain the process variable at the setpoint value with the present load on the system. The terms PV and SP in the equation are always in the same units, but not in the same units as CO and MO. The gain constant K_p can include a conversion factor to make the units compatible.

Proportional gain is often expressed in terms of Proportional Band, where:

$$\text{Proportional Band (PB \%)} = 100/\text{Gain} \qquad \textbf{Eq 4-2}$$

The proportional band represents the percentage of full range change of the error signal (PV – SP) that will cause full range change in the output of the controller.

Offset

"Offset" is the deviation of the controlled variable from the setpoint expressed in process units. Offset will occur whenever process load conditions have changed or a setpoint change has been made such that the original manual output, MO, of the controller is not sufficient to maintain the controlled process variable at the setpoint, SP. Offset may be minimized by using high controller gains (narrow proportional band); however, high gain may be impractical or may cause instability in some processes. Some controllers are equipped with a manual reset control which can be used to "zero-out" the offset while in the automatic mode. Controllers not so equipped are often switched back to "manual," adjusted for zero offset, then switched back to "automatic." Since this manual resetting would need to be done after every upset, integral mode is often added to give automatic reset action.

Proportional Plus Integral Mode (PI)

The "PI controller" is the most widely used of the various controller types (70-90% of the controllers in a typical plant). Combining the expressions for proportional and integral modes gives the expression for the PI controller:

$$CO = K_p (PV - SP) + K_i \int (PV - SP) \, dt + MO \qquad \textbf{Eq 4-3}$$

Because of the relationship between the controller gain and the process gain, the integral mode gain K_i can be expressed as K_p/T_i, where T_i is the integral mode time constant. This gives the more familiar form of the PI controller equation:

$$CO = K_p [(PV - SP) + 1/T_i \int (PV - SP) \, dt] + MO \qquad \textbf{Eq 4-4}$$

The integral term will cause the valve (or other final control element) to move at a speed proportional to the amount of the offset until all offset is removed. The integral time constant T_i is also known as reset time, and since it represents the time for the integral action to "repeat" the amount of the proportional action, the reciprocal of T_i (called "reset rate") is often given in units of "repeats per minute."

Proportional Plus Derivative Mode (PD)

Feedback control has a deficiency in that no corrective action is taken until some error signal exists. Problems are often encountered in the control of processes with large time constants and/or dead times. In controlling these slow processes, corrective action needs to be taken as soon as possible or the time to recover will be too long. Derivative action adds to the controller output based on the rate of change of the error signal (PV – SP). This is also called "rate" or "preact" control action, and control using derivative (rate) action is known as "anticipatory" control. Combining the proportional and derivative terms gives the expression for PD control action:

$$CO = K_p (PV - SP) + K_d [d(PV - SP)/dt] + MO \qquad \textbf{Eq 4-5}$$

The derivative gain constant K_d may be expressed as $K_d = K_p T_d$. The derivative time constant T_d represents the time required for the contribution from the derivative term to equal the contribution from the proportional term with a steadily changing or "ramp" error signal. Derivative is, by its nature, sensitive to signal noise and can cause excessive wear on the control valve. Sufficient signal filtering should be done to reduce the noise when derivative action is used in the controller.

Proportional Plus Integral Plus Derivative Mode (PID)

Many controllers include circuitry for proportional, integral, and derivative modes which permits the user to select the desired control action. Combining terms as before gives the expression for PID control action:

$$CO = K_p (PV - SP) + K_i \int (PV - SP) \, dt \qquad \textbf{Eq 4-6}$$
$$+ K_d [d(PV - SP)/ dt] + MO$$

As with the PI controller, the integral gain may be expressed as $K_p/(T_i)$ and the derivative gain may be expressed as $K_p/(T_d)$. This gives the more familiar form:

$$CO = K_p [(PV - SP) + 1/ T_i \int (PV - SP) \, dt \qquad \textbf{Eq 4-7}$$
$$+ T_d [d(PV - SP)/ dt]] + MO$$

An alternate form used in many digital computer systems uses a normalization constant which "lumps" the units conversion factors in K_n:

$$CO = K_n\,[Kp(PV - SP) - 1/T_i \int (PV - SP)\,dt + T_d\,[d(PV - SP)/dt]] + MO \qquad \textbf{Eq 4-8}$$

Fig. 4-20 compares the advantages and disadvantages of the various control modes for most desirable control.

FIG. 4-20

Control Mode Comparisons

Mode	Advantages	Disadvantages
On-Off	Simple, inexpensive	Constant cycling
Proportional	Does not add lag	Almost always has offset
Integral	Eliminates offset	Adds time lag to system
Derivative	Speeds up response	Responds to noise

Controller Tuning

Controller tuning has been referred to as the most important, least understood, and most poorly practiced aspect of process control. It is not an exact science and considerable "trial and error" must be used to achieve an acceptable combination of the tuning parameters for a particular process. "Good" control is a matter of definition and depends upon such factors as individual preference, process disturbances and interactions, product specifications, etc. Fig. 4-21a shows typical controller responses for different damping factors (ξ) to a step-change in load or setpoint. The damping factor may be defined as the ratio of actual damping to critical damping. The reader is referred to Perry's *Chemical Engineers' Handbook*, Section 22 for a more complete definition of damping factors. The "over-damped" responses ($\{\xi > 1\}$) cause no overshoot. The "under-damped" responses ($\xi < 1$) cause considerable oscillation about the setpoint, but the controlled variable eventually "lines-out" on the setpoint. The "critically-damped" response ($\xi = 1$) would seem ideal but often the time required to reach the setpoint is excessive. The quarter-decay response allows overshoot but each "swing" above and below the set-point is one-fourth that of the previous swing. This is the response that is usually considered acceptable for most processes. See Fig. 4-21b for an example of quarter-decay response.

Techniques for tuning controllers generally fall into one of two classes. First, there are some methods based on parameters determined from the closed-loop response of the system. Second, some methods are based on parameters determined from the open-loop response curve commonly known as the process reaction curve. The popular Ziegler-Nichols method falls into the second category.

Ziegler-Nichols Method[1]

This method was first reported by Ziegler and Nichols in 1942 and is also known as the "ultimate" method. The method determines the ultimate or maximum controller gain (proportional action only) for which the system is stable. The ultimate gain and ultimate period (time for one cycle at ultimate gain) are then used to calculate initial controller settings for quarter-decay response. The following steps may be used to determine ultimate gain and period:

1. Switch the controller to automatic.

FIG. 4-21

Typical Response Curves

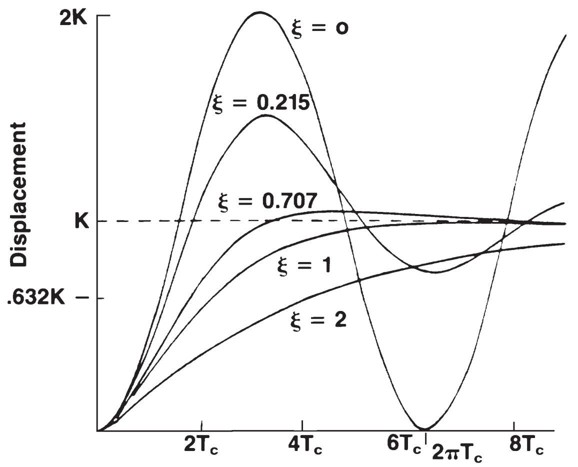

(a) Response Of Oscillatory Or Second-Order System For Various Values Of Damping Factor, ξ

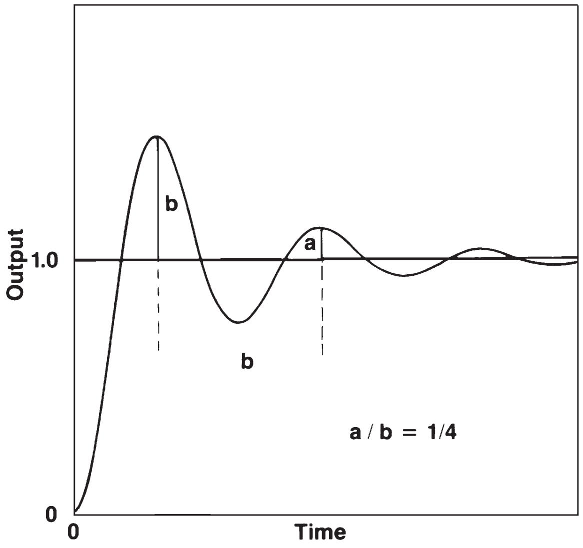

(b) Response Curve For 1/4 Decay Ratio

2. Tune out all integral (reset) and derivative (rate) action. (set T_i = max., set T_d = zero)
3. Set the proportional gain K_p at some arbitrary value, impose an upset on the process, and observe the response. (Moving the setpoint briefly and returning will create an upset.)
4. If the response is stable (curve C in Fig. 4-22), increase the gain and repeat the upset.
5. If the response is unstable (curve A in Fig. 4-22), decrease the gain and repeat the upset.
6. When the response exhibits sustained cycling (curve B in Fig. 4-22), note the controller gain setting and the ultimate period (P_u).

FIG. 4-22

Typical Responses Obtained When Determining Ultimate Gain and Ultimate Period

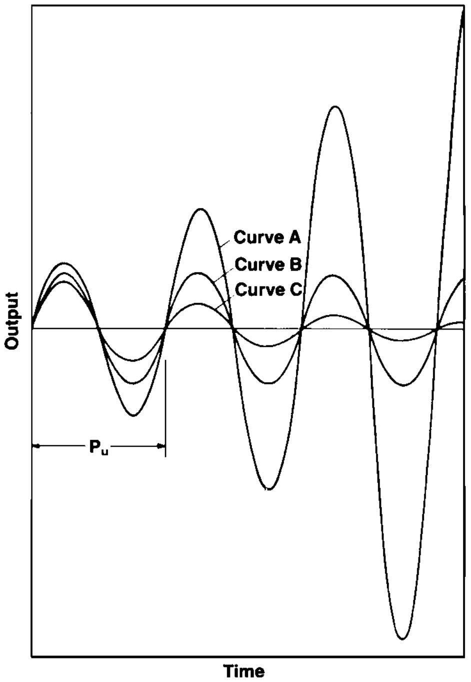

Curve A: unstable.
Curve B: continuous cycling.
Curve C: stable.

Fig. 4-23 gives relative controller gain, integral time, and derivative time for the various control mode combinations for quarter-decay response as related to ultimate controller gain setting, K_u, and ultimate period P_u. Gain settings are also shown in units of proportional band, PB.

Fig. 4-24 shows some typical settings for various types of process controllers.

Example 4-2 — An example using the Ziegler-Nichols method is given below:

For a certain temperature control system, the ultimate sensitivity K_u was found to be 0.4 psi per deg F, and the ultimate period P_u was found to be two minutes. A three mode PID controller is required.

Using Fig. 4-24:

Proportional gain K_p:

$$K_p = 0.6\,K_u = 0.6\,(0.4\text{ psi/°F}) = 0.24\text{ psi/°F}$$

Integral time constant T_i:

$$T_i = P_u/2,\ T_i = 2/2 = 1.0\text{ minute}$$

Derivative time constant T_d:

$$T_d = P_u/8,\ T_d = 2/8 = 0.25\text{ minutes}$$

Control Mode Considerations

The process control engineer has the responsibility for matching the many and variable characteristics of the process to be controlled with the most effective control hardware available.[6] Fig. 4-25 provides guidelines for choosing the mode of control for various types of applications based upon the process reaction rate and size and speed of load changes.

Special considerations should be made in applying a "split-range" controller. A common example is a column temperature controller on a cryogenic demethanizer. In this system the first half (0-50%) of the controller output actuates the "free" heat exchange with the incoming feed, and the second half (50-100%) of the controller output actuates the supplemental heat from the hot oil system. Adaptive gain control may be required since the heating value of the hot oil is much greater than that of the gas used in the heat exchange.

FIG. 4-23

Ziegler-Nichols Settings for 1/4 Decay Response[1]

Mode	K_p
(P)	0.5 K_u
(PI)	0.45 K_u
(PD)	0.6 K_u
(PID)	0.6 K_u

or

PB(%)	T_i	T_d
2(PB_u)	max.	zero
2.2(PB_u)	P_u/1.2	zero
1.65(PB_u)	max.	P_u/8.0
1.65(PB_u)	P_u/2.0	P_u/8.0

FIG. 4-24

Typical Controller Settings

Process	Gain	PB(%)	Integral		Derivative
			T_i (sec)	min/repeat	T_d (sec)
Flow	0.6-0.8	167-125	3.0-1.8	0.05-0.03	0.0
Pressure	5.0	20.0	120-60	2.0-1.0	0.0
Temp.	1.0-2.0	100-50	120-30	2.0-0.5	6.0-12

EMBEDDED ADVANCED CONTROL

Embedded advanced control will usually give an improved plant performance over that achievable with traditional techniques. By introducing Embedded Advanced Control, a high level of reliability and security is provided to maximize control system uptime. Since embedded advanced control tools have direct access to controller I/O, they may access process measurements and actuators with no communication jitter or delay. This allows use of these tools on the fastest processes.

CONTROL VALVES

Selecting the proper control valve for each application involves many factors. The valve body design, actuator style, and plug characteristic are critical items for selection. Proper valve sizing is necessary for accurate, efficient, economical process control. In areas where personnel will be affected, noise prediction and control becomes a significant factor.

Engineering application guidelines, nomographs, and equations presented in the following pages may be used to determine the correct control valve configuration, size and flow characteristics, and to predict noise levels for most applications. The material presented here may also be used to evaluate the performance of valves installed in existing plants.

The equations given in this section are used to calculate the flow coefficient (C_v or C_g) required for a valve to pass the re-

FIG. 4-25

Control Mode vs. Application

Control Mode	Process Reaction Rate	Load Changes		Applications
		Size	Speed	
On-off: Two-position with differential gap	Slow	Any	Any	Large-capacity temperature and level installations. Storage tanks, hot-water supply tanks, room heating, compressor suction scrubbers.
Floating, Single-speed with adjustable neutral zone	Fast	Any	Small	Processes with small dead time. Industrial furnaces and air conditioning.
Proportional	Slow to Moderate	Small	Moderate	Pressure, temperature, and level where offset is not objectionable. Kettle reboiler level, drying-oven temperature, pressure-reducing stations.
Proportional-plus-derivative (rate)	Moderate	Small	Any	Where increased stability with minimum offset and lack of reset wind-up is required. Compressor discharge pressure.
Proportional-plus-integral (reset)	Any	Large	Slow to Moderate	Most applications, including flow. Not suitable for batch operations unless overpeaking is allowed.
Proportional-plus-integral-plus-derivative	Any	Large	Fast	Batch control; processes with sudden upsets; temperature control.

quired flow. Most valve manufacturers publish flow coefficients for each valve style and size.

A brief description of the two major components of a control valve, the valve body and the actuator, is presented in Fig. 4-26.

FIG. 4-26

Relationship of Major Components

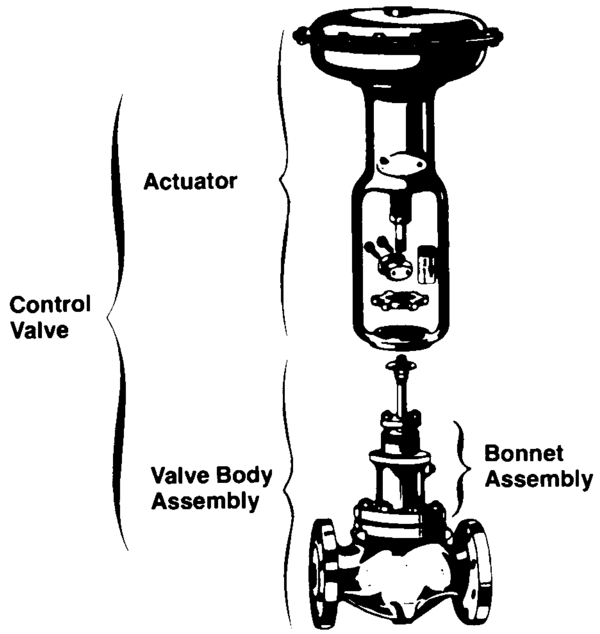

Control-Valve Bodies

The control-valve body (see Fig. 4-27) regulates the rate of fluid flow as the position of the valve plug is changed by force from the actuator. Therefore, the valve body must permit actuator thrust transmission, resist chemical and physical effects of the process, and provide the appropriate end connections to mate with the adjacent piping. It must do all of this without external leakage. Most valve body designs are of the globe style, but other configurations such as ball and butterfly styles are available. Final selection depends upon detailed review of the engineering application.

FIG. 4-27

Push-Down-to-Close Valve Body Assembly

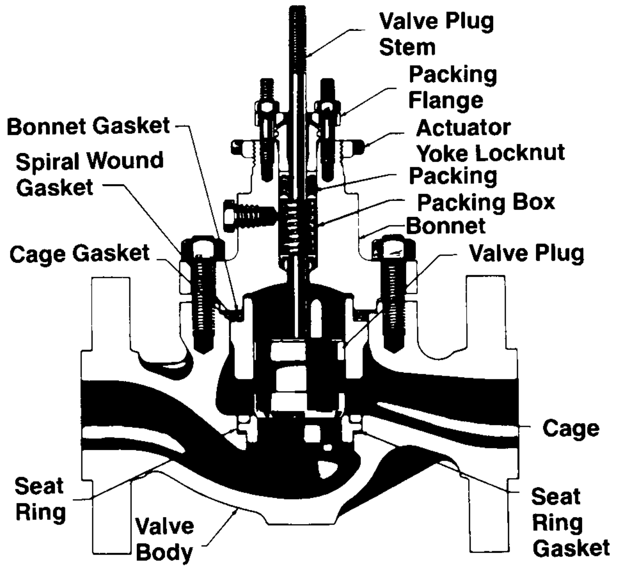

Control-Valve Actuators

Pneumatically operated control-valve actuators are the most popular type in use, but electric, hydraulic, and manual actuators are also widely used. The spring-and-diaphragm pneumatic actuator (see Fig. 4-28) is commonly specified, due to its dependability and its simplicity of design. Pneumatically operated piston actuators provide integral positioner capability and high stem-force output for demanding service conditions, such as high differential pressure or long valve stem travel distance.

The linear flow-characteristic curve shows that the flow rate is directly proportional to the valve travel. This proportional relationship produces a characteristic with a constant slope so that with constant pressure drop (ΔP), the valve gain will be the same at all flows. (Valve gain is the ratio of an incremental change in flow rate to an incremental change in valve plug position. Gain is a function of valve size and configuration, system operating conditions, and valve plug characteristic.) The linear-valve plug is commonly specified for liquid level control and for certain flow control applications requiring constant gain.

FIG. 4-28

Typical Spring-and-Diaphragm Actuator Assemblies

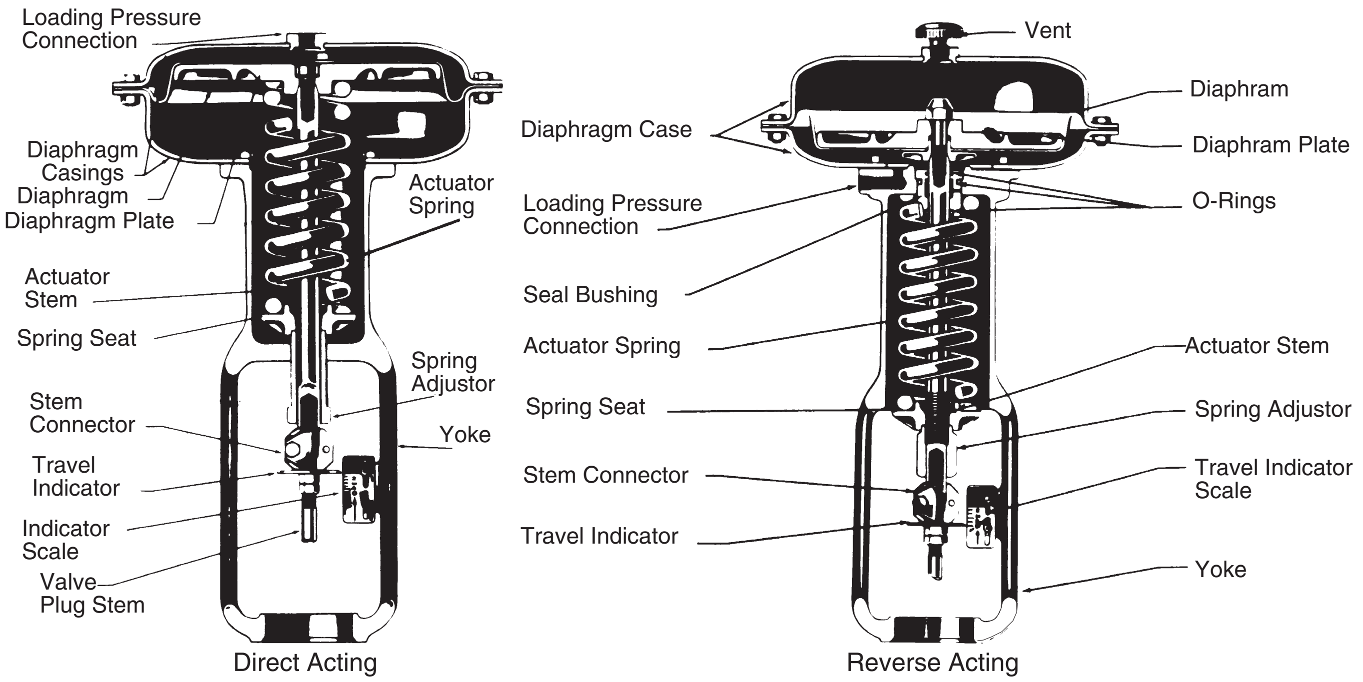

Direct Acting

Reverse Acting

Discussion of Flow Characteristics and Valve Selection

The flow characteristic of a control valve is the relationship between the flow rate through the valve and the valve travel as the travel is varied from 0 to 100%. “Inherent flow characteristic” refers to the characteristic observed during flow with a constant pressure drop across the valve. “Installed flow characteristic” refers to the characteristic obtained in service when the pressure drop varies with flow and other changes in the system.

Fig. 4-29 illustrates typical flow-characteristic curves. The quick-opening flow characteristic provides for maximum change in flow rate at low valve travel with a fairly linear relationship. Additional increases in valve travel give sharply reduced changes in flow rate. When the valve plug nears the wide open position, the change in flow rate approaches zero. In a control valve, the quick-opening valve plug is used primarily for on-off service; however, it is also suitable for many applications where a linear valve plug would normally be specified.

In the equal-percentage flow characteristic, equal increments of valve travel produce equal percentage changes in the existing flow. The change in flow rate is always proportional to the flow rate just before the change in position is made for a valve plug, disc, or ball position. When the valve plug, disc, or ball is near its seat and the flow is small, the change in flow rate will be small; with a large flow, the change in flow rate will be large. Valves with an equal-percentage flow characteristic are generally used for pressure control applications. They are also used for other applications where a large percentage of the total system pressure drop is normally absorbed by the system itself, with only a relatively small percentage by the control valve. Valves with an equal-percentage characteristic should also be considered where highly varying pressure drop conditions can be expected.

The modified parabolic-flow characteristic curve falls between the linear and the equal-percentage curve.

Note: Where detailed process knowledge is lacking, as a rule of thumb, use equal-percentage characteristics at 70% opening for the valve sizing.

FIG. 4-29

Example Flow Characteristic Curves

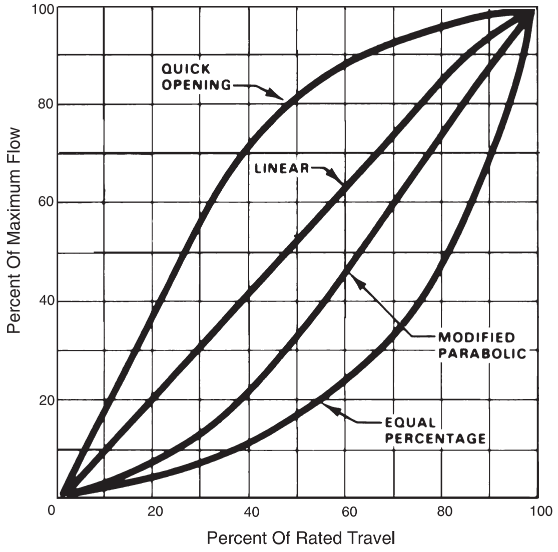

FUNDAMENTALS OF CONTROL VALVE SIZING AND NOISE PREDICTION

Gas Service

Critical Pressure Drop — Critical flow limitation is a significant problem with sizing valves for gaseous service. Critical flow is a choked flow condition caused by increasing gas velocity at the vena contracta. The vena contracta is the point of minimum cross-sectional area of the flow stream which occurs just downstream of the actual physical restriction. When the velocity at the vena contracta reaches sonic velocity, additional increases in pressure drop, ΔP, (by reducing downstream pressure) produce no increase in flow.

In the ISA sizing procedure critical flow limitations are addressed by calculating Y, the expansion factor, for utilization within the actual sizing equation.

$$Y = 1 - \frac{X}{3F_k\,X_c} \qquad \textbf{Eq 4-9}$$

where,

$$F_k = \frac{k}{1.4} \qquad \textbf{Eq 4-10}$$

Critical pressure drop, and thus critical flow, is realized when $X \geq F_k X_\tau$. Therefore, since the flow can't exceed that produced at the critical pressure drop the value of Y in the following sizing equations should never be less than 0.67.

$$Y = 1 - \frac{X}{3F_k\,X_c} = 1 - \frac{1}{3} = 0.67 \qquad \textbf{Eq 4-11}$$

Likewise the value of X in the equations should never exceed $F_k X_c$.

FIG. 4-30

Valve Sizing Equations

(Use Fig. 4-31 for value of Numerical Constant, N)

Flow Basis and Units	Equation
Mass Flow with Specific Weight, γ_1	$w = N_6 F_p C_v Y \sqrt{X P_1 \gamma_1}$
Volumetric Flow with Specific Gravity, G_g	$q = N_7 F_p C_v P_1 Y \sqrt{\frac{X}{G_g T Z}}$
Mass Flow with Molecular Weight, M	$w = N_8 F_p C_v P_1 Y \sqrt{\frac{XM}{TZ}}$
Volumetric Flow with Molecular Weight, M	$q = N_9 F_p C_v P_1 Y \sqrt{\frac{X}{MTZ}}$

FIG. 4-31

Numerical Constants for Gas and Vapor Flow Equations

Constant		Units Used in Equations					
	N	w	q*	p, Δp	γ_1	τ	d,D
N_5	0.00241 1000	– –	– –	– –	– –	– –	mm in
N_6	2.73 27.3 63.3	kg/h kg/h lb/h	– – –	kPa bar psia	kg/m^3 kg/m^3 lb/ft^3	– – –	– – –
N_7	4.17 417 1360	– – –	m^3/h m^3/h scfh	kPa bar psia	– – –	K K °R	– – –
N_8	0.948 94.8 19.3	kg/h kg/h lb/h	– – –	kPa bar psia	– –	K K °R	– – –
N_9	22.5 2250 7320	– – –	m^3/h m^3/h scfh	kPa bar psia	– – –	K K °R	– – –
*q is in cubic feet per hour measured at 14.73 psia and 60°F, or cubic meters per hour measured at 101.3 kPa and 15.6°C.							

Sizing Calculation Procedure – The compressible fluid sizing equations (see Fig. 4-30) can be used to determine the flow of gas or vapor through any style of valve. Absolute units of temperature and pressure must be used in the equation. Most commonly the equations are used to calculate the required C_v and thus valve size for a given set of service conditions. The equations can likewise be rearranged to calculate the flow or pressure drop for a given valve and set of service conditions. The steps are:

1. Select the appropriate sizing equation based on the stated inlet conditions and units of measurement. The limitations on Y and X as discussed above must be observed in all the sizing equations.
2. Calculate an initial, approximate required C_v based on an assumed Rated Pressure Drop Ratio Factor, X_c Initial assumptions for the value of X_c can be based on the general style of valve. See Fig. 4-32.
3. From the valve manufacturer's sizing data select a specific valve type and size such that the listed C_v is equal to or greater than the calculated $C_{v.}$ The X_c associated

with the listed Cv should then be used in the chosen sizing equation to calculate a revised, required $C_{v.}$ This iteration process continues until the calculated C_v and equals the manufactuer's listed $C_{v.}$

4. For a new valve selection a valve size is typically chosen such that the maximum, calculated C_v is close to 75% to 85% of valve travel. This allows for process variability while maintaining flow capability. The minimum, calculated C_v should typically occur at or about 10% of valve travel.
5. F_p is the Piping Geometry Factor. It corrects the sizing equations for the effects of fittings such as reducers and expanders that are attached to the valve body ends. F_p values can be determined via test or calculated per the ANSI/ISA S75.01 standard. If the valve has no such fittings attached, e.g., the nominal value size and nominal pipe size are the same, then F_p = 1.0. Refer to the full standard for the F_p calculations in cases where fittings do exist.

Other valve configurations, such as ball and butterfly valves, can be sized in a similar manner using the unique X_c and C_v values derived by the manufacturers.

FIG. 4-32

Typical $C_{V,}$ X_C and F_L Values for Valves*

Valve Style	Body Size, Inches	Flow Characteristic					
		Equal Percentage			Linear		
		C_v	X_c	F_L	C_v	X_c	F_L
Globe	1	8	0.74	0.88	17	0.61	0.84
	1-1/2	17	0.69	0.84	30	0.70	.082
	2	25	0.70	0.85	62	0.68	0.77
	2-1/2	49	0.66	0.84	84	0.71	0.81
	3	66	0.66	0.82	118	0.70	0.82
	4	125	0.67	0.82	181	0.74	0.82
	6	239	0.74	0.85	367	0.78	0.84
	8	268	0.60	0.85	526	0.74	0.87
Ball	1	16	0.53	0.86	–	–	–
	2	59	0.53	0.81	–	–	–
	3	120	0.50	0.80	–	–	–
	4	195	0.52	0.80	–	–	–
	6	340	0.52	0.80	–	–	–
	8	518	0.54	0.82	–	–	–
	10	1000	0.47	0.80	–	–	–
	12	1530	0.49	0.78	–	–	–
Butterfly	2	60	0.37	0.69	–	–	–
	3	111	0.40	0.69	–	–	–
	4	238	0.40	0.69	–	–	–
	6	635	.040	0.69	–	–	–
	8	1020	0.40	0.69	–	–	–
	10	1430	0.40	0.69	–	–	–
	12	2220	0.40	0.69	–	–	–
	14	2840	0.40	0.69	–	–	–
	16	3870	0.40	0.69	–	–	–

*At approximately 70% of valve travel. Maximum valve capacity may be estimated using the values given in this figure in conjunction with Fig. 4-29. For a more detailed analysis of capacity capabilities of a given valve at other percentages of travel, consult the valve manufacturer's data.

Aerodynamic Noise Prediction — Aerodynamic noise, the most common type of control valve noise, is the result of Reynolds stresses and shear forces that are the results of turbulent flow. Noise from turbulent flow is more common in valves handling compressible gases than in those controlling liquids.

The valve manufacturer should provide noise predictions or furnish adequate data to calculate expected noise levels since noise characteristics vary greatly with the type and model of valve being considered or in use. Most control valve manufacturers have valve sizing software available that include the valve sizing and noise prediction routines.

Liquid Service

The procedure used to size control valves for liquid service should consider the possibility of cavitation and flashing since they can limit the capacity and produce physical damage to the valve. In order to understand the problems more thoroughly, a brief discussion of the cavitation and flashing process is presented below.

Cavitation — In a control valve, the fluid stream is accelerated as it flows through the restricted area of the orifice, reaching maximum velocity at the vena contracta. Simultaneously, as the velocity increases, an interchange of energy between the velocity and pressure heads forces a reduction in the pressure.

If the velocity increases sufficiently, the pressure at the vena contracta will be reduced to the vapor pressure of the liquid. At this point, vapor cavities or bubbles, the first stage in cavitation, appear in the fluid stream. Downstream from the vena contracta, the fluid stream undergoes a deceleration process resulting in a reversal of the energy interchange which raises the pressure above the liquid vapor pressure.

The vapor cavities, or bubbles, cannot exist at the increased pressure and are forced to collapse or implode. These implosions are the final stage in the cavitation process. They potentially produce noise, vibration, physical damage, and other performance problems. In order to avoid cavitation completely, the pressures at all points within the valve must remain above the vapor pressure of the liquid. Cavitation can occur as the result of changes in the mean pressures through the valve, but also from localized changes due to flow separations and other local disturbances that are not indicated by examining just the mean inlet, vena contracta, and outlet pressures. Determining when a problem-causing level of cavitation is present represents a considerable challenge. The reader is referred to ISA RP75.23, "Considerations for Evaluating Control Valve Cavitation." This recommended practice provides more information on the cavitation process as well as suggesting a common terminology and methodology for making safe valve selections in cavitating applications. That recommended practice establishes the definition of a cavitation index, K_c, as follows:

$$K_c = \frac{P_1 - P_v}{P_1 - P_2} \qquad \textbf{Eq 4-12}$$

The evaluation of K_c at any given set of service conditions can then be compared to the manufacturer's valve operating limit. As discussed in the recommended practice, the selection of the appropriate operating limit for a given situation is dependent on the service conditions but should also consider other influences such as duty cycle, location, desired life, and past experience. All of these point to the need to consult the valve manufacturer when selecting a valve for cavitation control.

Flashing — The first stages of cavitation and flashing are identical; that is, vapor forms as the vena contracta pressure is reduced to the vapor pressure of the liquid. In the second stage of the flashing process, a portion of the vapor formed at the vena contracta remains in the vapor state because the downstream pressure is equal to or less than the vapor pressure of the liquid.

After the first vapor cavities are formed, the increase in flow rate will no longer be proportional to an increase in the square root of the body differential pressure. When sufficient vapor has been formed, the flow will become completely choked. As long as the inlet pressure (P_1) remains constant, an increase in pressure drop (ΔP) will not cause flow to increase.

Sizing Information — The following section is based on ISA-S75.01, "Flow Equations for Sizing Control Valves." The reader is referred to that standard for more complete discussion of these equations and methods. As that standard points out, these equations are not intended for situations involving mixed-phase fluids, dense slurries, dry solids, or non-Newtonion liquids. In these cases the valve manufacturer should be consulted for sizing assistance.

The ISA methodology recognizes the impact of service conditions that will cause the liquid to vaporize at some point between the inlet and outlet of the valve. This vaporization results in either cavitation or flashing, causing a breakdown in the normal relationship between C_v and $\sqrt{\Delta P}$ and ultimately a limit to the flow through the valve regardless of an increasing pressure drop caused by decreasing P_2. The recognition of this comes in the form of a separate sizing equation for each regime, nonvaporizing and vaporizing. Each must be solved and then the larger calculated C_v chosen as the required value.

This discussion of liquid sizing will be further restricted to:

1. Turbulent flow streams: There are usually flow streams that are not either high viscosity or low velocity. The majority of process plant control valves do operate in the turbulent regime, however if the Reynolds number for a process is less than 4000 the reader is referred to the ISA standard where a non-turbulent flow correction method can be found.
2. Valve installed without fittings attached to the valve ends: When fittings are present there are, as with the previous gas sizing discussion, necessary modifications to the sizing equations to accommodate the additional disturbance to flow. This discussion will be limited to the case where there are no fittings attached, therefore the valve size and pipe size are the same, $F_p = 1.0$. Refer to the full ISA standard for the proper methods if fittings are present.

Sizing Calculation Procedure —

1. Select the appropriate sizing equations based on the stated inlet conditions and units of measurement from Fig. 4-35.
2. Calculate the C_v required using the equation for nonvaporizing flow.
3. Calculate the C_v using the equation for vaporizing flow. An initial assumed value of F_1 can be taken from Fig. 4-32 or the manufacturer's literature. F_F the liquid critical pressure ratio factor, can be found from Fig. 4-33 based on the critical pressure and inlet vapor pressure for subject liquid. Fig. 4-34 lists critical pressures for some common fluids. The user must at this point iterate

through this calculation accounting for the variation in F_1 and valve-rated C_v due to valve style, size, trim, flow direction, etc.

4. Select the higher of the two calculated C_v's as the required C_v.
5. From the valve manufacturer's sizing data, select a specific valve type and size such that the listed C_v is equal to or greater than the calculated C_v.
6. See the previous section on Cavitation and consult the manufacturer's data for appropriate valve cavitation operating limits.

FIG. 4-33

Critical Pressure Ratios for All Liquids, F_F

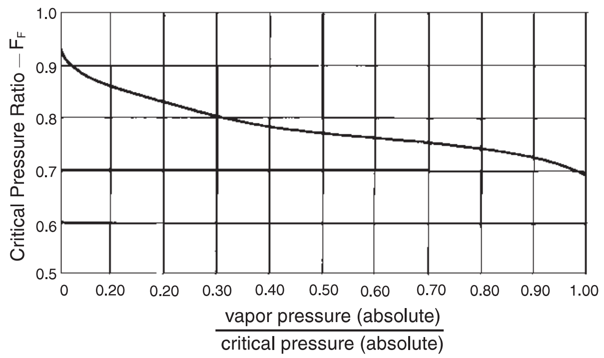

Use this curve for all liquids. Determine the ratio by dividing the pressure which may be obtained from Figure 4-34. From the ratio thus calculated the critical pressure ratio, F_F, may be read from this curve.

FIG. 4-34

Critical Pressure of Various Liquids

psia			
Ammonia	1636	Isobutane	529
Argon	706	Isobutylene	580
n-Butane	551	Methane	668
Carbon Dioxide	1071	Nitrogen	493
Carbon Monoxide	508	Nitrous Oxide	1048
Chlorine	1118	Oxygen	737
Dowtherm A	465	Phosgene	823
Ethane	708	Propane	616
Ethylene	731	Propylene	667
Fluorine	809	Refrigerant 11	635
Helium	33	Refrigerant 12	597

FIG. 4-35

Liquid Valve Sizing Equations
Use Fig. 4-36 for value of Numerical Constants, N

Flow Basis and Units	Equation
Nonvaporizing Mass Flow with Specific Weight, γ_1	$w = N_6 F_p C_v \sqrt{(P_1 - P_2)\gamma_1}$
Nonvaporizing Volumetric Flow with Specific Gravity, G_f	$q = N_1 F_p C_v \sqrt{\frac{P_1 - P_2}{G_f}}$
Vaporizing Mass Flow with Specific Weight, γ_1	$w = N_6 F_L C_v \sqrt{(P_1 - F_F P_v)\gamma_1}$
Vaporizing Volumetric Flow with Specific Gravity, G_f	$q = N_1 F_L C_v \sqrt{\frac{P_1 - F_F P_v}{G_f}}$

FIG. 4-36

Numerical Constants for Liquid Flow Equations

Constant		Units Used in Equations					
N		w	q	p, Δp	d, D	γ_1	v
N1	0.0865	–	m^3/h	kPa	–	–	–
	0.865	–	m^3/h	bar	–	–	–
	1.00	–	gpm	psia	–	–	–
N_6	2.73	kg/h	–	kPa	–	kg/m^3	–
	27.3	kg/h	–	bar	–	kg/m^3	–
	63.3	lb/h	–	psia	–	lb/ft^3	–

INSTALLATION, TROUBLESHOOTING, AND CALIBRATION

Installation and Troubleshooting

Control system troubleshooting logically falls into two categories: (1) the repair of control systems that previously functioned well, and (2) the successful modification of poorly commissioned systems that have never worked properly due to improper application, poor design, faulty hardware, or improper operating procedures (Fig. 4-37). Different techniques are employed for each category.

Failed Systems

- Control system malfunctions normally are reported by the process operator. A discussion with the operator should yield some clues as to the source of the problem, since he has probably been observing it for several hours, or days.
- The next step is to use the "process of elimination" to localize the problem. If replacement of an element with a known good one causes the problem to disappear, this is usually conclusive! Often this simple approach of parts changing will save time by avoiding a detailed system analysis. However, if the situation permits, the "bad" part should be temporarily re-installed to verify a "hard" failure rather than a "hung-up" condition which is often reset by the procedure of substitution.

- A "detailed system analysis" may be required if a control system has a number of interactive or serially dependent components and especially if more than one component is faulty. The process-of-elimination tests may have shown some conflicting results in this case. A complete control system diagram should be used to help isolate possible problem areas, separate cascade loops, etc. This step usually requires the services of the control engineer or someone familiar with all the control loop components and their functions. Caution should be taken to assure that control system response is observed over a sufficient length of time to detect problems in slow changing processes. Strip chart recorders are very useful in this analysis. Conversely, sequential event recorders may be needed to diagnose intermittent problems which occur only for very brief periods at irregular intervals. Recorders are available which can resolve events to within one millisecond for use in troubleshooting the fastest control loops.

In a well designed control loop, the process is the slowest responding element. Thus the rate of change of a disturbance as it initially propagates around the loop should point to the origin of the problem. In some cases, where multiple symptoms are present, answering the question: "What is common to all symptoms?" will locate the problem. It is often necessary to make observations over a period of time plus taking parallel measurements to completely document the problem and point to the source of the trouble.

Poorly Commissioned Systems

Some control systems may not have been properly commissioned or were not adequately designed. In this case it is necessary to determine how the system is meant to function before proper control can be implemented.

- The first step, after determining how a particular control loop is meant to function, is to put the final control element (valve, usually) on manual control and adjust it for the desired response of the controlled variable. If manual adjustment of the manipulated variable does not cause some response in, or controlling action on, the controlled variable then the control strategy is not suitable and some redesign is in order. However, some control situations such as compressor surge control are too fast for human reaction times and must be verified by other means. Many troublesome control loops are mistakenly declared to be faulty because it is not always realized that there is a trade-off between speed of response and loop stability. Also, there is an inherent interaction between certain control loops. An example is the interaction between temperature and pressure control loops in a distillation column.

FIG. 4-37

Common Measurement Problems

Variable	Symptom	Problem Source	Solution
Pressure	Zero shift, air leaks in signal lines.	Excessive vibration from positive displacement equipment.	Use independent transmitter mtg., flexible process connection lines. Use liquid filled gauge.
	Variable energy consumption under temperature control.	Change in atmospheric pressure.	Use absolute pressure transmitter.
	Unpredictable transmitter output.	Wet instrument air.	Mount local dryer, use regulator with sump, slope air line away from transmitter.
	Permanent zero shift.	Overpressure.	Install pressure snubber for spikes.
Level (diff. press.)	Transmitter does not agree with level.	Liquid gravity change.	Gravity compensate measurement, or recalibrate.
	Zero shift, high level indicated.	Water in process absorbed by glycol seal liquid.	Use transmitter with integral remote seals.
	Zero shift, low level indicated.	Condensable gas above liquid.	Heat trace vapor leg. Mount transmitter above connections and slope vapor line away from transmitter.
	Noisy measurements, high level indicated	Liquid boils at ambient temperature.	Insulate liquid leg.
Flow	Low mass flow indicated.	Liquid droplets in gas.	Install demister upstream; heat gas upstream of sensor.
	Mass flow error.	Static pressure change in gas.	Add pressure recording pen.
	Transmitter zero shift.	Free water in fluid.	Mount transmitter above taps.
	Measurement is high.	Pulsation in flow.	Add process pulsation dampner.
	Measurement error.	Non-standard pipe runs.	Estimate limits of error.
Temperature	Measurement shift.	Ambient temperature change.	Increase immersion length. Insulate surface.
	Measurement not representative of process.	Fast changing process temperature.	Use quick response or low thermal time constant device.
	Indicator reading varies second to second.	Electrical power wires near thermocouple extension wires.	Use shielded, twisted pair thermocouple extension wire, and/or install in conduit.

- If the process variable is controllable with the loop in the manual mode, note which measurement must be observed to make the decision to open or close the valve; then determine whether the automatic control system makes adjustments based upon the same variables. For example, it may be determined that a single variable controller is insufficient, if the controlled variable deviates too much due to disturbances, feed composition changes, etc. In this case it may be necessary to change the control scheme to include override control arrangements or two or more controllers in cascade to achieve the desired automatic control.

Poor Performance

Two major sources of poor performance in control loops are: (1) excessive time delay between the actuation of the control element (valve) and the resulting change in the measurement of the controlled variable, and (2) a variation in loop gain due to a change in process conditions.

- Excessive time delay can result from process lag and dead-time and from instrument dead-time (such as the cycle time of a chromatograph) and should be compensated for in the control system. To achieve stability in a system with excessive time delay, the controller gain must be low and reset (integral) time must be long. Recovery from process upsets will be slow. When dead-time is present, loop performance will deteriorate proportionally to the square of the dead-time.
- Variable loop gain is a common problem in cascade control loops where the secondary controller is a flow controller without square root extraction on the measurement signal. Since an orifice plate differential pressure signal is proportional to the square of the flow, the setpoint to the secondary controller is also a "flow-squared" signal. This setpoint signal is provided by the output of the primary controller in a cascade configuration. Therefore, the primary loop gain increases rapidly as flow is reduced; if that controller was tuned at high flows it will become unstable at low flows.

Calibration

Calibration of measurement transducers is a vital part of instrument maintenance and should be performed on a regular basis.

Pressure transmitters — Moderate to high pressure units are usually calibrated with a "dead weight tester." This is a hydraulic device in which weights are added to one side of a hydraulic circuit to generate a known pressure which is applied to the input of the transducer under calibration. If the transducer is to be calibrated in units of absolute pressure, a barometer should be used to measure atmospheric pressure and an adjustment of the added weights made. The dead weight tester is normally a test bench device. Low pressure units are calibrated with a pneumatic calibrator which supplies a precise air pressure. Since they are easily adjustable, 3-15 psig devices are usually calibrated by this method. Pneumatic calibrators are also test bench devices. Field or process area checks are often made with a hand-held bulb pump and an accurate pressure gauge.

Differential pressure transmitters — Differential pressure level transmitters are usually calibrated with a mercury manometer or a low level pneumatic calibrator. If remote seals are used, the seal paddle relative elevation should be the same during calibration as when the transmitter is installed. Zero elevation and suppression can be done with a bench calibrator, but if the transmitter has a zero shift with changes in static pressure, this shift must be removed after the transmitter is installed.

Calibration of differential pressure transmitters for flow measurements is done using the same equipment as for levels. An additional consideration must be made for those electronic transmitters which have a square root extractor as an integral part of the transmitter. In this case, the transmitter output is the square root of the input differential pressure. Fig. 4-38 shows the square root input-output relationship.

FIG. 4-38

Square Root Input/Output Relationship

Input		Output	
% of span	Signal level	% of span	Roots
0	3 psi /4 mA	0.0	0
9		30.0	3
25	6 psi /8 mA	50.0	5
50	9 psi /12 mA	70.7	7.07
75	12 psi /16 mA	86.6	8.66
100	15 psi /20 mA	100.0	10

Temperature transmitters — Temperature transmitters are by far the most difficult to calibrate because of the difficulty in generating precise controlled temperatures. Calibration of pneumatic filled-bulb type temperature transmitters is normally a lengthy test bench procedure. Temperature calibrators for generating process temperatures are of three varieties: (1) electrically heated direct air, (2) hot oil bath, and (3) a gas fluidized bed using a thermally conductive powder. All these require a considerable amount of time (20-40 minutes avg.) to reach a steady state temperature. Electronic temperature transmitters which use resistance temperature devices (RTD) have an advantage in that the sensing element calibration needs only a single point check and the transmitter can be calibrated electronically using the known intrinsic properties of the sensor. Field checking of these transmitters is practical.

Thermocouple transmitter calibration requires an accurate millivolt source to simulate the thermocouple signal at the upper and lower limits of the temperature range of the transmitter being calibrated. However, since all thermocouple tables show millivolt readings based on some reference temperature, usually 32°F, some sort of reference temperature compensation must be done. Historically, a reference junction in an ice bath was used to provide ice point compensation. Also a reference junction at ambient temperature was often used in conjunction with a thermometer to read the ambient temperature and provide a reference millivoltage. Modern devices make temperature transmitter calibration much simpler because of built-in reference compensation. Some digital devices merely require the entering of the desired temperature and they provide the correct millivoltage to simulate a thermocouple with automatic reference compensation. Also, compact electronic modules are available for ice point compensation and thermocouple linearization. Some electronic calibrators supply the millivolt signal as well as power for two-wire transmitters and indicators. The millivolt source is set to the values which correspond to the upper and lower temperature limits of the range of the transmitter and the transmitter is adjusted so that it produces the desired zero-scale (3 psi, 4 ma, etc.) and full-scale (15 psi, 20 ma, etc.) outputs. When field checking electronic devices, all safety codes must be observed. Calibrators which are battery powered and intrinsically safe are recommended.

COMPUTER SYSTEMS

Analog Computers

A process control analog computer is composed of electronic modules such as amplifiers, summers, controllers, multipliers, dividers, square and square root devices, lead and lag modules, limiters, and special dead-time devices. These modules are based around the integrated circuit operational amplifier and are interconnected to implement the desired control strategy. The process control analog computer is very reliable, low in cost, and easy to use, but has been made obsolete to some degree by the more versatile digital computer.

Digital Computers

Digital computers are attractive for many applications in the process control field because of their speed, accuracy, flexibility, display and logging capabilities, and ability to perform complex calculations and store and transmit vast amounts of data.

Digital computers come in almost any size or shape, ranging from tiny single board special purpose devices to large data processing computers.

Programmable logic controllers (PLC) — A special purpose class of microcomputers designed to implement a series of sequential functions such as ladder network diagrams. They are best suited to batch type operations or machine control. Some examples are: dehydrator control, compressor loading control, engine start-up sequencers, and product blenders. Some PLC's provide for data logging and/or display of information on CRT terminals.

Microcomputers — Microcomputers usually include a higher level software system and more versatile input/output hardware than PLC's. They are often used as the process control computer in small to medium sized installations such as gas plants.

Minicomputers — The minicomputer incorporates a more complex, higher speed arithmetic logic unit as the central processor. Minicomputers accommodate large amounts of memory and may include a high speed disk unit for data and program storage as well as input/output ports to interface with a variety of peripheral equipment. Minicomputers are normally used as the process control computer in larger installations such as refineries, chemical plants, etc.

Process input/output equipment — In addition to the array of printers, CRT terminals, disk units, etc., normally found with a computer system, there is a process input/output system. This is a set of electronic modules, usually a "card-cage" type subassembly, used to interface the process signals to the computer. Most process I/O signals fall into one of the following groups:

- Analog (flows, pressures, levels, temperatures, etc.)
- Digital (on-off status sense or actuation)
- Pulse (tachometers, counters, etc.)
- Serial (coded data)

DIGITAL FIRST-LEVEL CONTROL SYSTEMS

First-level controllers are those which actually manipulate the valves or other final control devices to maintain the process variable at a desired setpoint.

Individual controllers — Controllers located either on the control room panel board or in the process area. These operate independently or may receive a setpoint from another controller or computer system in a cascade arrangement.

Direct digital controllers (DDC) — DDC controllers exist as algorithms in the software of a digital computer, and, through the appropriate transducers, continually sample the respective process measurements, compare them with their corresponding setpoints, and manipulate the appropriate valve or other final control device. Reliability of the computer is essential in a DDC system.

Distributed control systems (DCS) — In a DCS installation the controllers and measurement circuits are modularized in small groups (e.g. eight controllers per module) for greater security against failure. The controllers exist in a combination of hardware and software and may be part of a control scheme programmed in a master DCS system. The controllers may also receive setpoints from a separate supervisory computer system. DCS systems support a variety of communication methods, such as a high speed "data highway" serial data transmission concept which can interface to many different computers. Any digital first-level control system must be backed up by a battery powered uninterruptible power supply (UPS) to prevent loss of control of the process during AC power line interruptions.

Fieldbus — Fieldbus technology is the basis of the next generation of process control. It is an all digital, serial, two-way communication system that interconnects devices in the field such as sensors, actuators and controllers. Fieldbus is a Local Area Network (LAN) for instruments, with built-in capability to distribute a control application across the network.

It has the ability to distribute control among intelligent field devices in the plant and digitally communicate that informtion at high speed.

With full use of field intelligence, process management is no longer just process control. It is now also asset management: gathering and using a wealth of new information from intelligent transmitters, valves and analyzers. It includes configuring, calibrating, monitoring, performing diagnostics, and maintaining records from anywhere in the plant — while the process is running.

The fieldbus can be used for control applications such as temperature, level and flow control. Devices can be powered directly from the fieldbus and operate on wiring that was previously used for 4-20mA devices. The fieldbus can also support intrinsically safe (I.S.) fieldbuses with bus powered devices. An I.S. barrier is placed between the power supply in the safe area and I.S. device in the hazardous area.

ANALYTICAL INSTRUMENTS

Cyclic Analyzers

Many analytical instruments are cyclic, or sampled data devices, such as the chromatograph. These automatically take a sample of the process stream, analyze it, and transmit the results to the desired device. Since most analysis cycles take from one to 20 minutes to complete, considerable "dead-time" is introduced into a control loop using this type of measurement. Dead-time compensation should be included in the control scheme for proper control response. Process stream sampling is an item of vital concern in good chromatography or with any analysis technique. Some points of consideration are:

- Sample probe: Must be located at a point in the process where the material to be analyzed is in the desired phase (vapor or liquid) at sufficient pressure and flow.
- Sample lines: Should be kept as short as possible for minimum transport time. May need to be heat-traced to keep vapor samples from condensing. Sample flow must be great enough to completely flush the line between analysis cycles.
- Sample filters: Used to keep any particulate matter out of the analyzer. Knock-out pots or other devices may be required to remove liquid condensate.
- Sample pumps: Required for certain low pressure processes. Vacuum aspirators may be used for low sample flows.

Other cyclic or batch type instruments determine such quantities as vapor pressure, dew point, end point, flash point, Btu content, and sulfur content.

Continuous Analyzers

Other analytical instruments perform continuous analyses of a process stream for a specific parameter such as oxygen content, gas density, etc.

Some continuous analyzers pump or flow a sample through a detector cell. Others place the detector element directly in the process stream. The methods of detection vary widely and may include the use of nuclear radiation, optics, vibrating reeds, flotation cells, catalytic "burners," and other methods.

Fig. 4-39 shows a typical block diagram for a process chromatograph installation. Fig. 4-40 identifies several types of continuous process analytical instruments and a type of detection used by each.

FIG. 4-39

Typical Process Chromatograph System

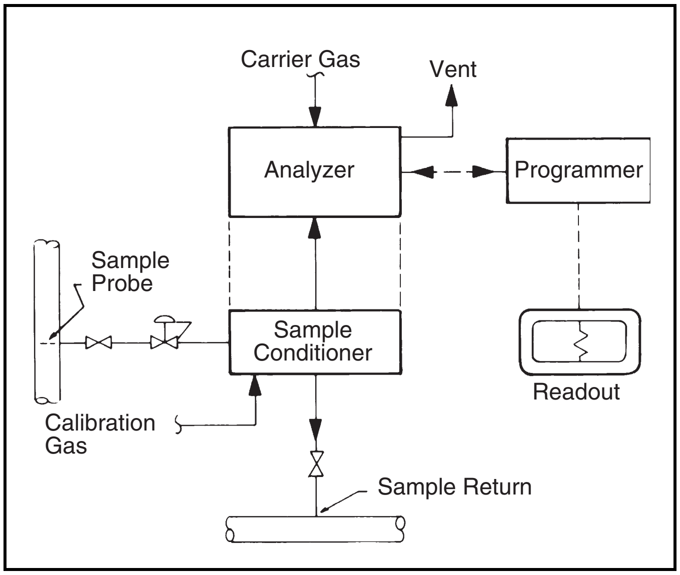

FIG. 4-40

Continuous Analysis Instruments

Analyzer	Detector (Sensing Method)
Liquid Density	Resonant Mass
Liquid Viscosity	Viscosimeter
Liquid Level	Ultrasonic, Gamma Ray
Gas Density	Torque Measurement
Sulfur in Oil	X-Ray Attenuation
pH	Electrolytic
Oxygen	Paramagnetic, Coulometric
Trace Moisture	Electrolytic Cell
Nitrous Oxides	Chemiluminescence
CO, CO_2, SO_2	Infra-red Absorption
H_2S, SO_2	Ultra-violet
Light Hydrocarbons	Chromatograph
Btu (Heating Value)	Calorimeter, Chromatograph

System Control Diagram

During plant development the process engineers specify the process through the development of the P&IDs (Piping & Instrument Diagram). Throughout this effort, the process engineers depict the total plant behavior. However, the P&IDs provide limited facilities for documentation of the overall functionality and operational aspects of the plant.

It's the control system engineer's task to design the control system to fulfill the process functionality required to achieve product specifications as well as the requirements imposed by the overall operating & control philosophy and manning levels.

The operator's understanding of the operational efficiency of the plant is a difficult task without proper documentation of the overall control and monitoring functions available. Often, operational problems within the different systems cannot be identified until the system is in operation, leading to major modifications in late project phases. In order to get a common understanding of control system functionality between all involved parties at an early project stage, System Control Diagrams have been introduced.[2]

REFERENCES

1. Ziegler, J. G., and Nichols, N. B., "Optimum Settings for Automatic Controllers," ASME Transactions, 1942, p.759-768.
2. NORSOK Standard, "I-005, System Control Diagram," Rev 1, Oct. 1999, Internet address: http://www.nts.no/norsok/i/i005/i00501.htm.

BIBLIOGRAPHY

1. Instrument Society of America, "Dictionary of Industrial Digital Computer Terminology," 1972.
2. Instrument Society of America, "Process Instrumentation Terminology," ANSI/ISA-S51-1-Latest Edition.
3. Anderson, Norman A., "Instrumentation for Process Measurement and Control," Chilton Company, 1980.
4. Liptak, Bela G., "Instrument Engineers Handbook," Chilton Co., 1970, 1982.

5. Considine, D. M., "Encyclopedia of Instrumentation and Control," McGraw-Hill, Latest Edition.
6. Considine, D. M., "Process Instruments and Controls Handbook," McGraw-Hill, Latest Edition.
7. Young, William J., "Organization of Instrumentation Guidelines for Standard Instruments and Control Systems," PennWell Publishing Co., 1982.
8. Ogata, Katsuhiko, "Modern Control Engineering," Prentice-Hall, Inc., 1970.
9. Zoss, L. M., "Applied Instrumentation in the Process Industries," Gulf Publishing Co., 1979.
10. Cheremisinoff, P. N., "Engineering Measurements and Instrumentation," Marcel Dekker, 1981.
11. Perry, R. H., "Chemical Engineers' Handbook," Section 22, McGraw-Hill, Latest Edition.
12. Cheremisinoff, P. N. and Perlis, H. J., "Analytical Instruments and Measurements for Process and Pollution Control," Ann Arbor Science, 1981.
13. Hewson, John E., "Process Instrumentation Manifolds," Instrument Society of America, 1981.
14. Whitaker, Norman R., "Process Instrumentation Primer," Petroleum Publishing Co., 1980.
15. Scott, R. W., "Developments in Flow Measurement," Applied Science Publishers, 1982.
16. Shinskey, F. G., "Process Control Systems," McGraw-Hill, 1979.
17. Shinskey, F. G., "Distillation Control for Productivity and Energy Conservation," McGraw-Hill, 1977.
18. Shinskey, F. G., "Energy Conservation Through Process Control," Academic Press, 1978.
19. Whalen, B. R., "Basic Instrumentation," University of Texas Petroleum Extension Service, 1983.
20. Deshpande, P. B. and Ash, R. H., "Computer Process Control," Instrument Society of America, 1981.
21. Omega Engineering, Inc., "Temperature Measurement Handbook," Omega Engineering Inc., Latest Edition.
22. Badavas, Paul C., "Direct Synthesis and Adaptive Controls," Chemical Engineering, CE Refresher Part 5, February 6, 1984, p. 99-103.
23. "Practical Process in Instrumentation and Control," McGraw Hill Publication Co., 1980.

NOTES:

SECTION 5

Relief Systems

This section is concerned with the design and operation of pressure relieving systems for gas processing plants. The principal elements of pressure relief systems are the individual pressure relief devices, the flare piping system, the flare separator drum, and the flare — including igniters, tips, sealing devices, purge and steam injection for smokeless burning. Application of relief devices must comply with appropriate ASME Vessel Codes. Design of relief systems must also comply with applicable state and federal codes and laws as well as the requirements of the insurance covering the plant or installation. State and federal regulations not only cover safety but also environmental considerations such as air and water pollution and noise abatement. This section presents a convenient summary of relief system information obtained from API and other sources, abridged and modified for this data book. Final design work should be consistent with the full scope of API, ASME, and other code and specification requirements.

FIG. 5-1

Nomenclature

a = sonic velocity, ft/sec
A = required discharge area of the valve, sq in. Use valve with the next larger standard orifice size/area
A_B = bellows area, sq in.
A′ = discharge area of the valve, sq in., for valve with next standard size larger than required discharge area
Ac = total outside surface area of container, sq ft
A_D = disk area, sq in.
A_N = nozzle seat area, sq in.
A_P = piston area, sq in.
A_w = total wetted surface area of vessel, sq ft
A_3 = vessel area exposed to fire, sq ft
B = liquid expansion coefficient, 1/°F, at relieving temperature [or (Vol/Vol)/°F]
C = drag coefficient
C_p = specific heat at constant pressure, BTU/(lb • °F)
C_v = specific heat at constant volume, BTU/(lb • °F)
C_1 = coefficient determined by the ratio of specific heats of the gas or vapor at standard conditions
d = flare tip diameter, inches
D = particle diameter, ft
f = correction factor based on the ratio of specific heats
F = factor due to insulation (see Fig. 5-17)
F′ = relief valve factor, dimensionless
F_2 = coefficient for subcritical flow (Fig. 5-12)
F_S = spring force, pounds
gpm = flow rate, gallons per minute at flowing temperature and pressure
g = acceleration due to gravity, 32.2 ft/sec^2
g_c = gravitational constant, 32.2 (ft • lbm)/(lbf • sec^2)
G = specific gravity of gas referred to air = 1.00 at 60°F and 14.696 psia; or, if liquid, the specific gravity of liquid at flowing temperature referred to water = 1.00 at 60°F
h_{L1} = enthalpy of saturated liquid at upstream pressure, Btu/lb
h_{L2} = enthalpy of saturated liquid at downstream pressure, Btu/lb
h_{G2} = enthalpy of vapor at downstream pressure, Btu/lb
H = height of vapor space of vessel, ft
H_l = latent heat of the liquid exposed to fire, Btu/lb
H_S = flare stack height, ft
I = radiation intensity at point X, Btu/(hr • ft^2)
k = specific heat ratio, Cp/Cv (see Section 13)
K_b = capacity correction factor due to back pressure
K_c = combination correction for rupture disk = 0.9
= 1.0 no rupture disk installed
K_d = coefficient of discharge, obtainable from the valve manufacturer
K_n = correction factor for Napier steam equation
K_{sh} = correction factor due to the amount of superheat in the stream
K_v = capacity correction factor due to viscosity
K_w = capacity correction factor due to back pressure (Fig. 5-14)
L = drum length, ft
L/D = length to diameter ratio of pipe
L_f = length of flame, ft
M = Mach number at pipe outlet
MW = molecular weight of gas or vapor
MABP = maximum allowable back pressure, psig
NHV = net heating value of flare gas, Btu/lb
P = set pressure, psig
P_{CF} = critical-flow pressure, psia
P_n = normal operating gas pressure, psia
P_1 = upstream relieving pressure, psia. This is the set pressure plus the allowable overpressure plus the atmospheric pressure
P_2 = downstream pressure at the valve outlet, psia
P_b = back pressure, psig
ΔP = pressure drop, psi
ΔP_w = pressure drop, in. of water
Q = heat input, Btu/hr

FIG. 5-1 (Cont'd)

Nomenclature

Q_a = minimum required capacity expressed as cfm of air at standard conditions
Q_r = heat released, Btu/hr
Q_v = flow through valve, scfm
r = ratio of downstream pressure to upstream pressure, P_2 / P_1
R = distance from flame center to point X, ft
Re = Reynolds number (dimensionless)
R_o = universal gas constant (10.73) $\frac{\text{psia} \cdot \text{ft}^3}{\text{lb mole} \cdot °\text{R}}$
S = specific heat, Btu/(lb • °F)
t = temperature, °F
T = absolute temperature of the inlet vapor, °R
T_n = normal operating gas temperature, °R
T_1 = gas temperature, °R, at the upstream pressure
T_w = vessel wall temperature, °R
U_d = maximum allowable vapor velocity for vertical vessel, ft/sec
V = gas velocity, ft/sec
V_{ex} = exit velocity, ft/sec
V_w = wind velocity, ft/sec (= 1.47 V_w')
V_w' = wind velocity, mph
W = flow, lb/hr
W_{hc} = hydrocarbon flow, lb/hr
W_{stm} = steam flow, lb/hr
W_f = flare gas flow rate, lb/hr
W_r = vapor rate to be relieved by the relief valve, lb/hr
x_i = weight fraction of component i in total stream
X = distance from the base of the stack to another point at the same elevation, ft
X_c = see Fig. 5-21
Y_c = see Fig. 5-21
Z = compressibility factor at flowing conditions

Greek

Δ = prefix, indicates finite increment
ε = fraction of heat radiated
ρ_L = density of liquid, lb/cu ft
ρ_v = density of vapor, lb/cu ft
θ = angle of flare flame from vertical, degrees
μ = viscosity at flowing temperature, centipoise

Nomenclature for this section is covered in Fig. 5-1. Pressure relief valve is a generic term applied to relief valves, safety valves, or safety relief valves. Definition by type of relief valve is covered in the relief device description. Relief valve characteristics related to pressure vessel requirements are illustrated in Fig. 5-2.

RELIEF DEVICE DESIGN

Pressure relief valves or other relieving devices are used to protect piping and equipment against excessive over-pressure. Proper selection, use, location, and maintenance of relief devices are essential to protect personnel and equipment as well as to comply with codes and laws.

Determination of the maximum relief required may be difficult. Loads for complex systems are determined by conservative assumptions and detailed analysis. By general assumption, two unrelated emergency conditions caused by unrelated equipment failures or operator error will not occur simultaneously (no double jeopardy). The sequence of events must be considered. The development of relief loads requires the engineer to be familiar with overall process design, including the type of pump drives used, cooling water source, spares provided, plant layout, instrumentation, and emergency shutdown philosophy.

This section suggests methods to calculate relief capacity for most emergency conditions, including fire. A common reference for determining individual relieving rates is contained in Section 3 of API RP 521.[1] The design of the proper relieving device must take into consideration all of the following upset conditions for the individual equipment item if such upset can occur. Each upset condition must be carefully evaluated to determine the "worst case" condition which will dictate the relieving device capacity.

Blocked Discharge

The outlet of almost any vessel, pump, compressor, fired heater, or other equipment item can be blocked by mechanical failure or human error. In this case, the relief load is usually the maximum flow which the pump, compressor, or other flow source produces at relief conditions.

Fire Exposure

Fire is one of the least predictable events which may occur in a gas processing facility, but is a condition that may create the greatest relieving requirements. If fire can occur on a plant-wide basis, this condition may dictate the sizing of the entire relief system; however, since equipment may be dispersed geographically, the effect of fire exposure on the relief system may be limited to a specific plot area. Vapor generation will be higher in any area which contains a large number of uninsulated vessels. Various empirical equations have been developed to determine relief loads from vessels exposed to fire. Formula selection varies with the system and fluid considered. Fire conditions may overpressure vapor-filled, liquid-filled, or mixed-phase systems.

Tube Rupture

When a large difference exists between the design pressure of the shell and tube sides of an exchanger (usually a ratio of 1.5 to 1 or greater), provisions are required for relieving the low pressure side. Normally, for design, only one tube is considered to rupture. Relief volume for one tube rupture can be calculated using appropriate sizing equations in this section. When a cool media contacts a hot stream, the effects of flashing should be considered. Also the possibility of a transient overpressure caused by the sudden release of vapor into an all-liquid system should be considered.

FIG. 5-2

Characteristics of Safety Relief Valves for Vessel Protection[1]

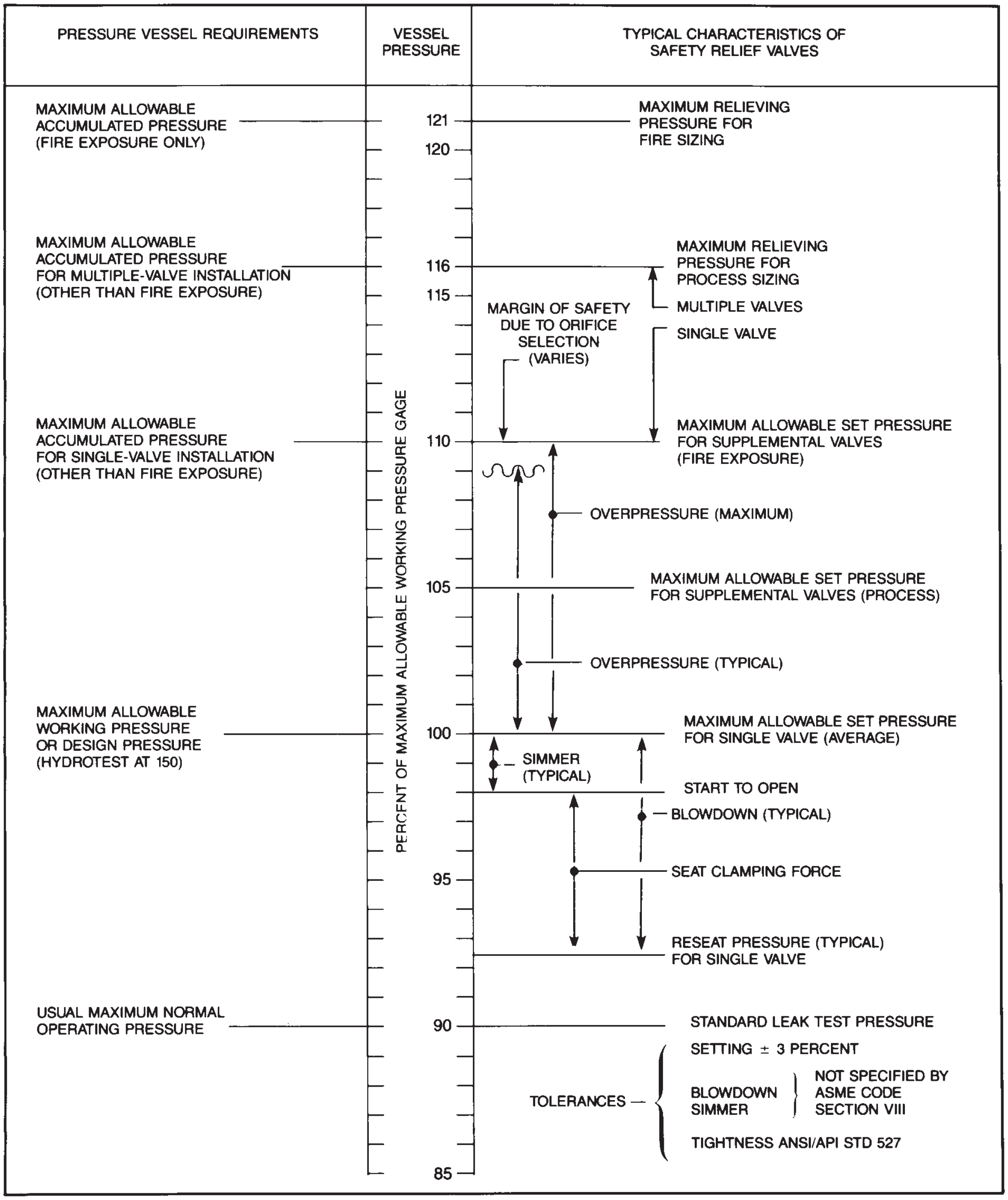

Notes:

1. The operating pressure may be any lower pressure required.
2. The set pressure and all other values related to it may be moved downward if the operating pressure permits.
3. This figure conforms with the requirements of the *ASME Boiler and Pressure Vessel Code*, Section VIII.
4. The pressure conditions shown are for safety relief valves installed on a pressure vessel (vapor phase).

Courtesy American Petroleum Institute

Control Valve Failure

The failure positions of instruments and control valves must be carefully evaluated. In practice, the control valve may not fail in the desired position. A valve may stick in the wrong position, or a control loop may fail. Relief protection for these factors must be provided. Relief valve sizing requirements for these conditions should be based on flow coefficients (manufacturer data) and pressure differentials for the specific control valves and the facility involved.

Thermal Expansion

If isolation of a process line on the cold side of an exchanger can result in excess pressure due to heat input from the warm side, then the line or cold side of the exchanger should be protected by a relief valve.

If any equipment item or line can be isolated while full of liquid, a relief valve should be provided for thermal expansion of the contained liquid. Low process temperatures, solar radiation, or changes in atmospheric temperature can necessitate thermal protection. Flashing across the relief valve needs to be considered.

Utility Failure

Loss of cooling water may occur on an area-wide or plant-wide basis. Affected are fractionating columns and other equipment utilizing water cooling. Cooling water failure is often the governing case in sizing flare systems.

Electric power failure, similar to cooling water failure, may occur on an area-wide or plant-wide basis and may have a variety of effects. Since electric pump and air cooler fan drives are often employed in process units, a power failure may cause the immediate loss of reflux to fractionators. Motor driven compressors will also shut down. Power failures may result in major relief loads.

Instrument air system failure, whether related to electric power failure or not, must be considered in sizing of the flare system since pneumatic control loops will be interrupted. Also control valves will assume the position as specified on "loss of air" and the resulting effect on the flare system must be considered.

SPECIAL RELIEF SYSTEM CONSIDERATIONS

Equipment

The following equipment considerations should be followed for relief system design.

Fired Heaters — If there is a possibility that the process side of a fired heater may be blocked in, then a relief valve should be provided to protect the heater.

Pumps — Relief valves are required on the discharge of each positive displacement pump. Normally, these reliefs are piped back to the process upstream of the pump rather than to the flare system. Isolation valves around the relief valves may not be required if the pump itself can be isolated for maintenance.

Vessels and Tanks — Vessels or tanks which are subject to atmospheric "breathing" due to cooling of gas or liquid contents are normally protected by "breather" valves or vacuum relief valves. Vessels in higher pressure service are normally designed for full vacuum if upset conditions can cause a vacuum situation — otherwise vacuum relief valves must be provided to meet code requirements.

Compressors — Each positive displacement compressor must have a relief valve on the discharge of each stage upstream of the block and check valves in order to protect the compressor. These reliefs are normally piped to a closed system.

Low Temperature Flaring

When low temperature streams are relieved, the flare system piping and equipment exposed to cryogenic temperature may require stainless steel or other acceptable alloys.

The system should be designed for the coldest process stream to be relieved plus the lower temperature effect of the expanding fluid (Joule-Thomson effect). Materials selection should be made according to applicable code recommendations.

RELIEVING DEVICES

Several pressure relief devices are certified and approved under Section VIII of the ASME Boiler and Pressure Vessel Code[2] covering unfired pressure vessels. They include spring loaded direct-acting relief valves, pilot operated relief valves, and rupture disks. When the governing code is ANSI B31.3[3] or ANSI B31.8[4], other types of pressure relieving devices such as monitoring regulators, series regulators, weight-loaded relief valves, liquid seals, etc. are permitted. The discussion below is limited to ASME, Section VIII, devices. The devices must be compatible with the service and the overall design of the system. See ASME, Section I, for fired boiler relieving criteria.

Conventional Relief Valves

In a conventional relief valve, the inlet pressure to the valve is directly opposed by a spring. Tension on the spring is set to keep the valve shut at normal operating pressure but allow the valve to open when the pressure reaches relieving conditions. This is a differential pressure valve. Most conventional safety-relief valves available to the petroleum industry have disks which have a greater area, A_D, than the nozzle seat area, A_N. The effect of back pressure on such valves is illustrated in Fig. 5-3. If the bonnet is vented to atmospheric pressure, the back pressure acts with the vessel pressure so as to overcome the spring force, F_S, thus making the relieving pressure less than when set with atmospheric pressure on the outlet. However, if the spring bonnet is vented to the valve discharge rather than to the atmosphere, the back pressure acts with the spring pressure so as to increase the opening pressure. If the back pressure were constant, it could be taken into account in adjusting the set pressure. In operation the back pressure is not constant when a number of valves discharge into a manifold.

A cut-away of a conventional relief valve is shown in Fig. 5-3. Materials of construction for relief valves vary by service.

Balanced Relief Valves

Balanced safety-relief valves incorporate means for minimizing the effect of back pressure on the performance characteristics — opening pressure, closing pressure, lift, and relieving capacity.

These valves are of two types, the piston type and the bellows type, as shown diagrammatically in Fig. 5-4. In the piston type, of which several variations are manufactured, the guide is vented so that the back pressure on opposing faces of the valve disk cancels itself; the top face of the piston, which has

FIG. 5-3

Conventional Safety-Relief Valve

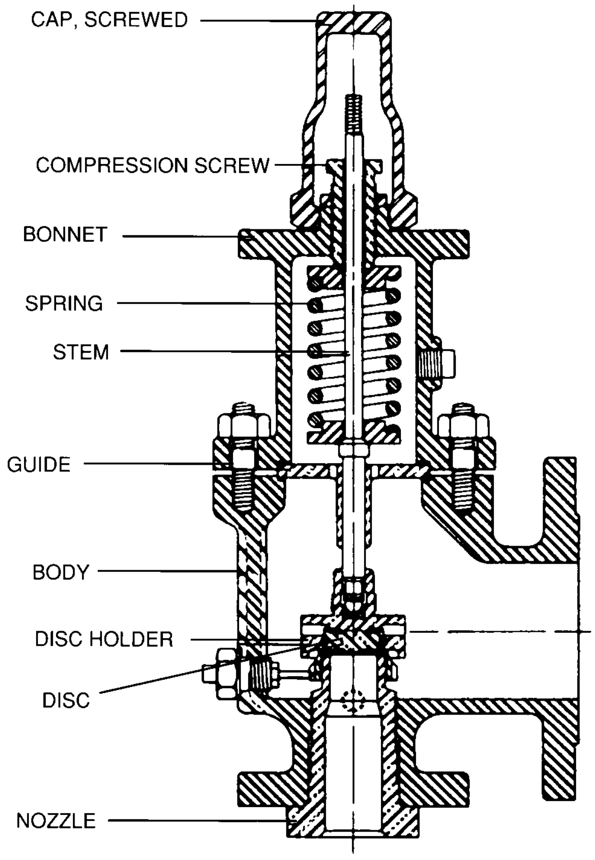

Valve Cross Section

Courtesy Lonergan Company

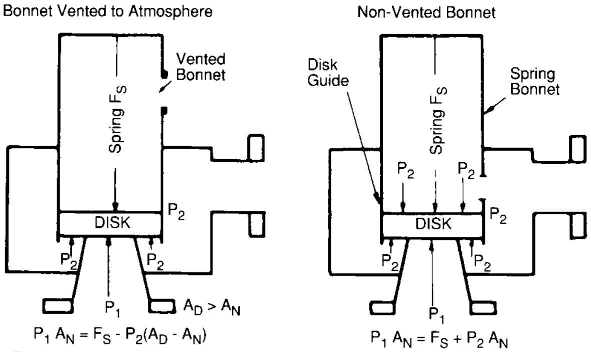

$P_1 A_N = F_S - P_2(A_D - A_N)$

Back Pressure Decreases Set Pressure

$P_1 A_N = F_S + P_2 A_N$

Back Pressure Increases Set Pressure

Effect of Back Pressure on Set Pressure of Conventional Safety-Relief Valves[6]

Courtesy American Petroleum Institute

the same area, A_P, as the nozzle seat area, A_N, is subjected to atmospheric pressure by venting the bonnet. The bonnet-vented gases from balanced piston-type valves should be disposed of with a minimum restriction and in a safe manner.

In the bellows type of balanced valve, the effective bellows area, A_B, is the same as the nozzle seat area, A_N, and, by attachment to the valve body, excludes the back pressure from acting on the top side of that area of the disk. The disk area extending beyond the bellows and seat area cancel, so that there are no unbalanced forces under any downstream pressure. The bellows covers the disk guide so as to exclude the working fluid from the bonnet. To provide for a possible bellows failure or leak, the bonnet must be vented separately from the discharge. The balanced safety-relief valve makes higher pressures in the relief discharge manifolds possible. Both balanced-type valves shown in Fig. 5-4 should have bonnet vents large enough to assure no appreciable back pressure during design flow conditions. If the valve is in a location in which atmospheric venting (usually not a large amount) presents a hazard, the vent should be piped to a safe location independent of the valve discharge system. The user should obtain performance data on the specific type of valve being considered.

A cross section drawing of a balanced (bellows) relief valve is shown in Fig. 5-4.

Pilot Operated Relief Valves

A pilot operated relief valve consists of two principal parts, a main valve and a pilot. The valve utilizes a piston instead of a shaft. Inlet pressure is directed to the top of the main valve piston. More area is exposed to pressure on the top of the piston than on the bottom so pressure, instead of a spring, holds the main valve closed. At the set pressure, the pilot opens, reducing the pressure on top of the piston thereby allowing the main valve to open fully. For some applications, pilot-operated relief valves are available in minimum friction, light-weight diaphragm construction (in place of heavy pistons). Pilot operated valves can allow backflow if downstream pressure exceeds set points. Backflow prevention is required on valves connected to common relief headers. A check valve, split piston type valve, or backflow preventer in the pilot line can be used. A typical pilot operated relief valve is shown in Fig. 5-5. This style valve should be considered for applications involving high back pressure, high operating pressure, or where premium seat tightness is desired.

Resilient Seat Relief Valves

With the use of metal-to-metal seat conventional or balanced type relief valves where the operating pressure is close to the set pressure, some leakage can be expected through the seats of the valve (refer to API Standard 527)[5]. Resilient seat relief valves with either an O-ring seat seal or plastic seats can provide seat integrities which exceed API Standard 527 (Fig. 5-6); however, there are limitations of temperature and material compatibility when using these valves, and manufacturer guidelines should be consulted. Although such valves provide near zero leakage until seat damage occurs, the resilient seats may erode rapidly once leakage begins.

Rupture Disk

A rupture disk consists of a thin diaphragm held between flanges. The disk is designed to rupture and relieve pressure within tolerances established by ASME Code. Rupture disks can be used in gas processing plants, upstream of relief valves, to reduce minor leakage and valve deterioration. In these in-

FIG. 5-4

Balanced Safety-Relief Valve

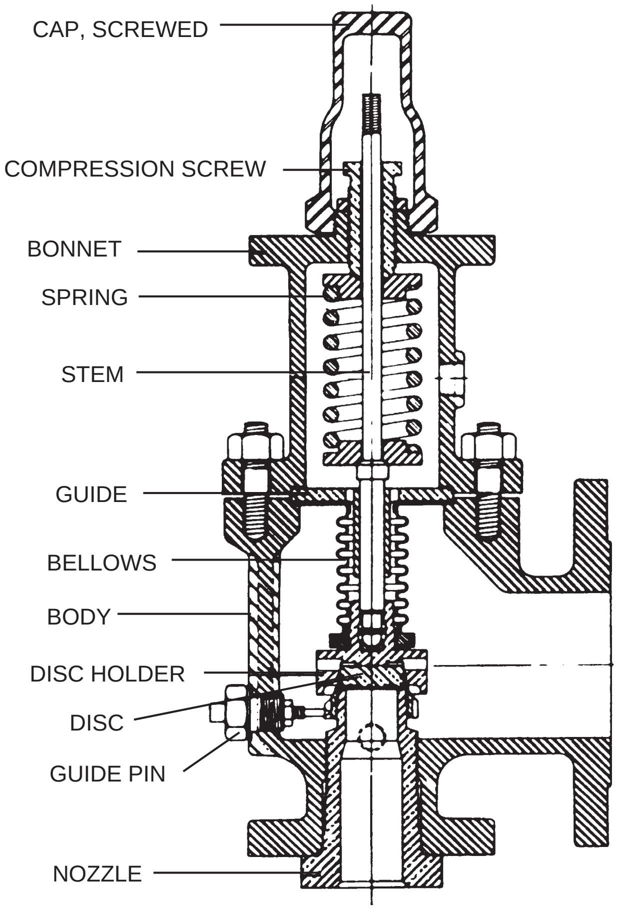

Bellows Valve Cross Section

Courtesy Lonergan Company

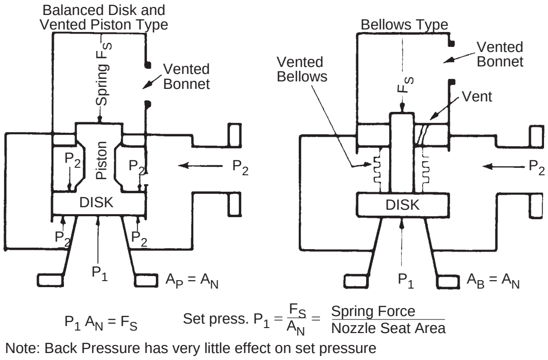

Effect Of Back Pressure on Set Pressure of Balanced Safety-Relief Valves[6]

Courtesy American Petroleum Institute

stallations, the pressure in the cavity between the rupture disk and the relief valve should be monitored to detect a ruptured disk. In some applications a rupture disk with a higher pressure rating is installed parallel to a relief valve. A rupture disk is subject to fatigue failure due to operating pressure cycles. To establish recommended replacement intervals, consult rupture disk suppliers.

Rupture disks should be used as the primary relieving device only if using a pressure relief valve is not practical. Some examples of such situations are:

(a) Rapid rates of pressure rise. A pressure relief valve system does not react fast enough or cannot be made large enough to prevent overpressure, e.g., an exchanger ruptured tube case or a runaway reaction in a vessel.

(b) Large relieving area required. Because of extremely high flow rates and/or low relieving pressure, providing the required relieving area with a pressure relief valve system is not practical.

(c) A pressure relief valve system is susceptible to being plugged, and thus inoperable, during service.

SIZING OF RELIEF DEVICES

After the required relief capacity of a relief valve has been determined, the minimum orifice area required must be calculated. Industry standard for orifice designation, orifice area, valve dimensions, valve body sizes, and pressure ratings are available. The standard orifices available — by letter designation, orifice area, and valve body size — are shown in Fig. 5-7.

FIG. 5-5

Pilot Operated Relief Valve

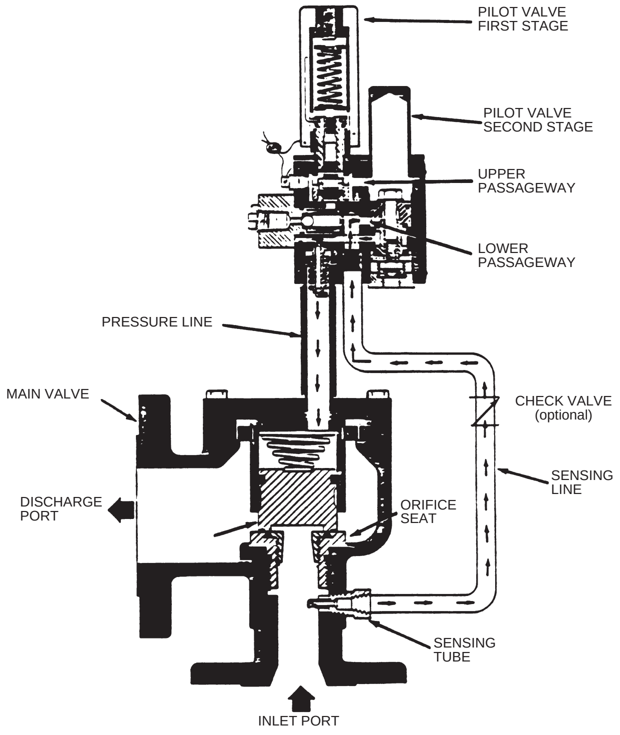

Courtesy GPE Controls

FIG. 5-6

O-Ring Seals
Conventional and Bellow Valves

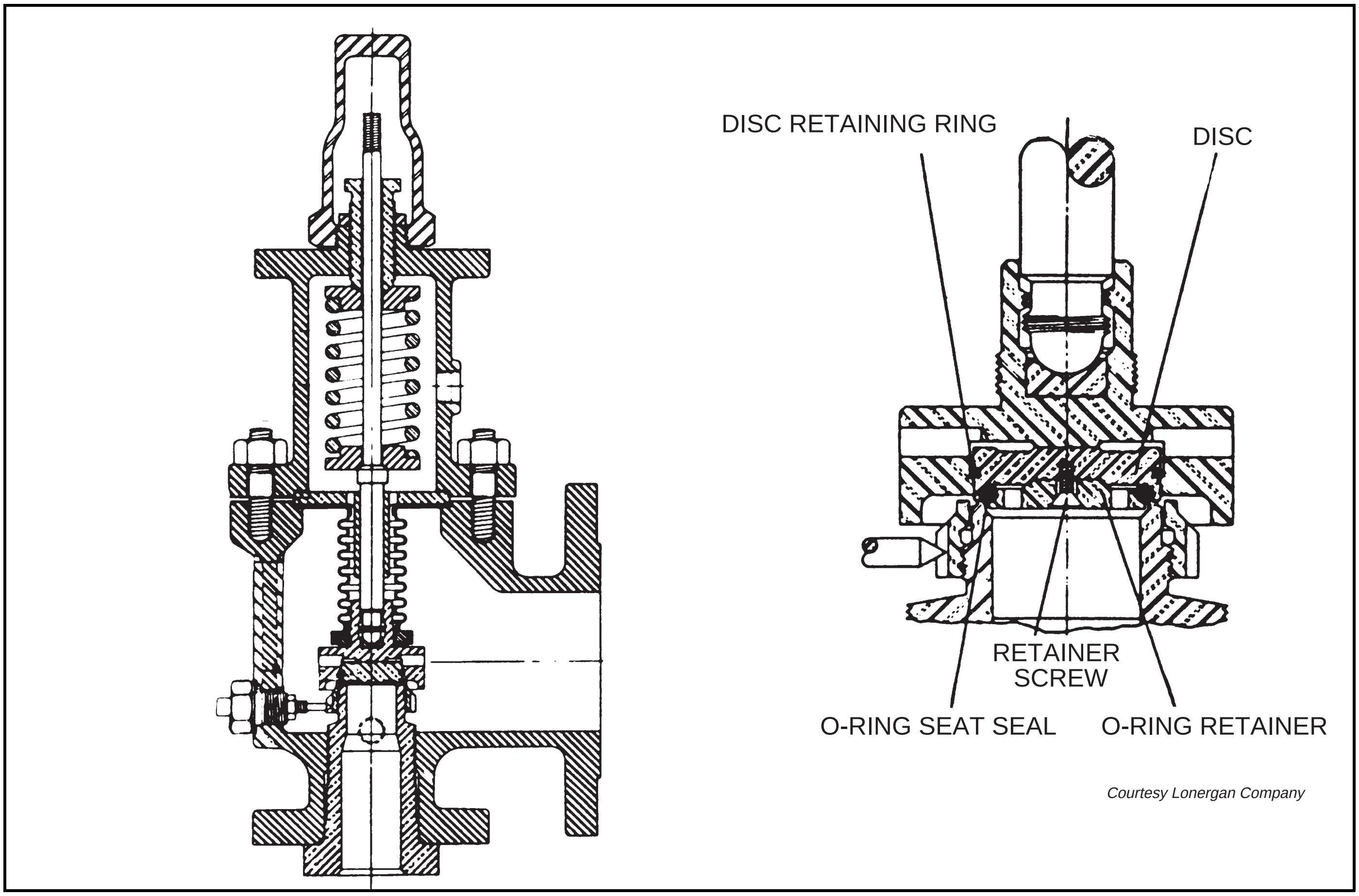

Courtesy Lonergan Company

In addition to the standard sizes, many relief valves are manufactured with orifice areas smaller than "D", and some pilot-operated relief valves contain orifice areas larger than "T." Manufacturers should be contacted for information on non-standard sizes.

The set pressure and the overpressure allowed must be within the limits permitted by the applicable codes. System analysis must include downstream piping. For instance, consider the use of a relief valve made for a vessel with a maximum allowable working pressure of 100 psig. The relief valve set pressure is 100 psig, and the maximum allowable overpressure is 10% (10 psig). The vessel pressure when relieving must be limited to 110 psig (100 psig set pressure plus 10 psi maximum overpressure). Pressure buildup downstream of the relief valve should never cause the vessel pressure to exceed the maximum allowable overpressure.

Sizing for Gas or Vapor Relief

The rate of flow through a relief valve nozzle is dependent on the absolute upstream pressure (as indicated in Eq 5-1, Eq 5-2, and Eq 5-3) and is independent of the downstream pressure as long as the downstream pressure is less than the critical-flow pressure.[6] However, when the downstream pressure is increased above the critical flow pressure, the flow through the relief valve is materially reduced (e.g., when the downstream pressure equals the upstream pressure, there is no flow).

The critical-flow pressure, P_{CF}, may be estimated by the perfect gas relationship shown in Eq 5-5.

As a rule of thumb if the downstream pressure at the relief valve is greater than one-half of the valve inlet pressure (both pressures in absolute units), then the relief valve nozzle will experience subcritical flow.

Critical Flow — Safety valves in gas or vapor service may be sized by use of one of these equations:

$$A = \frac{W\sqrt{(T_1)(Z)}}{(C_1)(K_d)(P_1)(K_b)(K_c)\sqrt{MW}} \qquad \textbf{Eq 5-1}$$

$$A = \frac{Q_v\sqrt{(T_1)(MW)(Z)}}{(6.32)(C_1)(K_d)(P_1)(K_b)(K_c)} \qquad \textbf{Eq 5-2}$$

$$C_1 = 520\sqrt{k\left(\frac{2}{k+1}\right)^{\frac{k+1}{k-1}}} \qquad \textbf{Eq 5-3}$$

C_1 and K_b can be obtained from Figs. 5-8, 5-9, 5-10, and 5-11. For final design, K should be obtained from the valve

FIG. 5-7

Relief Valve Designations

Standard Orifice Designation	Orifice Area cm^2	Orifice Area (in.^{2})											
D	0.710	0.110	•	•	•								
E	1.265	0.196	•	•	•								
F	1.981	0.307	•	•	•								
G	3.245	0.503			•	•	•						
H	5.065	0.785				•	•						
J	8.303	1.287					•	•	•				
K	11.858	1.838							•				
L	18.406	2.853							•	•			
M	23.226	3.60								•			
N	28.000	4.34								•			
P	41.161	6.38								•			
Q	71.290	11.05									•		
R	103.226	16.0									•	•	
T	167.742	26.0											•
		in.	1 × 2	1.5 × 2	1.5 × 2.5	1.5 × 3	2 × 3	2.5 × 4	3 × 4	4 × 6	6 × 8	6 × 10	8 × 10
		mm	25 × 50	38 × 50	38 × 62	38 × 75	50 × 75	38 × 100	75 × 100	100 × 150	150 × 200	150 × 250	200 × 250
			Valve Body Size (Inlet Diameter × Outlet Diameter)										

manufacturer. A value for K of 0.975 may be used for preliminary sizing.

Subcritical Flow — For downstream pressures, P_2, in excess of the critical-flow pressure, P_{CF}, the relief valve orifice area can be calculated from

$$A = \frac{W\sqrt{Z\ T_1}}{(735)\ (F_2)\ (K)\ \sqrt{MW\ (P_1)\ (P_1 - P_2)}} \qquad \textbf{Eq 5-4}$$

F_2 is taken from Fig. 5-12.

$$P_{CF} = P_1 \left(\frac{2}{k+1}\right)^{\frac{k}{k-1}} \qquad \textbf{Eq 5-5}$$

Balanced pressure relief valves should be sized using Eq. 5-1 or Eq. 5-2 and the back pressure correction factor supplied by the valve manufacturer.

Sizing for Steam Relief

Safety-relief valves in steam service are sized by a modification of Napier's steam flow formula. Valve manufacturers can supply saturated steam capacity tables. A correction factor, K_{sh}, must be applied for safety valves in superheated steam service.

For safety-relief valves in steam service, the required area may be estimated from the following equations from the ASME Code:

(For ASME Section VIII)

$$A = \frac{W}{(51.5)\ (P_1)\ (K_{sh})\ (K_d)\ (K_c)\ (K_n)\ (K_b)} \qquad \textbf{Eq 5-6}$$

$$K_n = \frac{0.1906\ P_1 - 1000}{0.2292\ P_1 - 1061} \qquad \textbf{Eq 5-7}$$

where $P_1 > 1500$ psia and $< = 3200$ psia.

See Fig. 5-13 for superheat correction factors. For saturated steam at any pressure, $K_{sh} = 1.0$.

Sizing for Liquid Relief

Turbulent Flow — Conventional and balanced bellows relief valves in liquid service may be sized by use of Eq 5-8. Pilot-operated relief valves should be used in liquid service

FIG. 5-8

Values of Coefficient C_1[6]

k	C_1
0.4	216.9274
0.5	238.8252
0.6	257.7858
0.7	274.5192
0.8	289.494
0.9	303.0392
1.0	315.37*
1.1	326.7473
1.2	337.2362
1.3	346.9764
1.4	356.0604
1.5	364.5641
1.6	372.5513
1.7	380.0755
1.8	387.1823
1.9	393.9112
2.0	400.2962
2.1	406.3669
2.2	412.1494

*Interpolated values, since C_1 becomes indeterminate as k approaches 1.00

Note: Calculated from Eq. 5-3.

FIG. 5-9

Values of C_1 for Gases

	Mol mass	k	C_1		Mol mass	k	C_1
Acetylene	26	1.28	345	Hydrochloric acid	36.5	1.40	356
Air	29	1.40	356	Hydrogen	2	1.40	356
Ammonia	17	1.33	351	Hydrogen sulfide	34	1.32	348
Argon	40	1.66	377	Iso-butane	58	1.11	328
Benzene	78	1.10	327	Methane	16	1.30	346
Carbon disulfide	76	1.21	338	Methyl alcohol	32	1.20	337
Carbon dioxide	44	1.28	345	Methyl chloride	50.5	1.20	337
Carbon monoxide	28	1.40	356	N-butane	58	1.11	328
Chlorine	71	1.36	352	Natural gas	19	1.27	345
Cyclohexane	84	1.08	324	Nitrogen	28	1.40	356
Ethane	30	1.22	339	Oxygen	32	1.40	356
Ethylene	28	1.20	337	Pentane	72	1.09	325
Helium	4	1.66	377	Propane	44	1.14	331
Hexane	86	1.08	324	Sulfur dioxide	64	1.26	342

FIG. 5-10

Constant Back Pressure Sizing Factor, K_b, for Conventional Safety-Relief Valves (Vapors and Gases Only)[6]

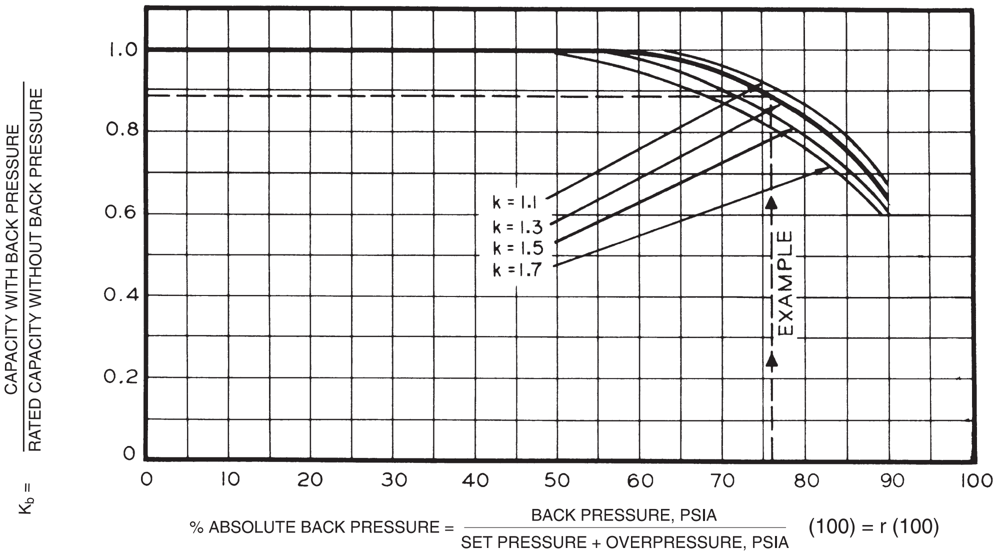

Example:

Set pressure (MAWP) = 100 pounds per square inch gauge

Superimposed back pressure = 70 pounds per square inch gauge

Spring set = 30 pounds per square inch

Built-up back pressure = 10 pounds per square inch

Percent absolute back pressure $= \left(\dfrac{(70 + 10 + 14.7)}{(100 + 10 + 14.7)}\right)(100) = 76$ percent

Follow dotted line — K_b = 0.89 (from curve)

Capacity with back pressure = (0.89)(rated capacity without back pressure)

Note: This chart is typical and suitable for use only when the make of valve or the actual critical-flow pressure point for the vapor or gas is unknown; otherwise, the valve manufacturer should be consulted for specific data.

Courtesy American Petroleum Institute

FIG. 5-11

Variable or Constant Back-Pressure Sizing Factor, K_b, for Balanced Bellows Safety-Relief Valves (Vapors and Gases)[6]

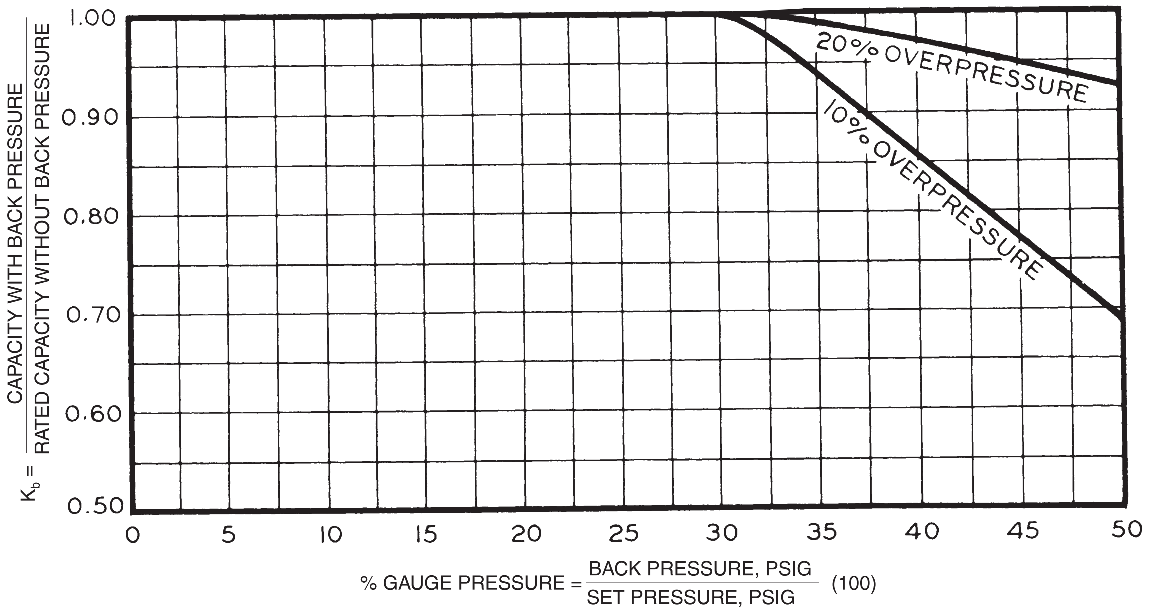

Note: The above curves represent a compromise of the values recommended by a number of relief valve manufacturers and may be used when the make of valve or the actual critical-flow pressure point for the vapor or gas is unknown. When the make is known, the manufacturer should be consulted for the correction factor.

These curves are for set pressures of 50 pounds per square inch gauge and above. They are limited to back pressure below critical-flow pressure for a given set pressure. For subcritical-flow back pressures below 50 pounds per square inch gauge, the manufacturer must be consulted for the values of K_b.

Courtesy American Petroleum Institute

only when the manufacturer has approved the specific application.

$$A = \frac{(\text{gpm}) \sqrt{G}}{(38)\,(K_d)\,(K_c)\,(K_w)\,(K_v)\,\sqrt{(P_1 - P_b)}} \qquad \textbf{Eq 5-8}$$

Laminar Flow — For liquid flow with Reynolds numbers less than 4,000, the valve should be sized first with $K_v = 1$ in order to obtain a preliminary required discharge area, A. From manufacturer standard orifice sizes, the next larger orifice size, A′, should be used in determining the Reynolds number, Re, from either of these relationships:

$$\text{Re} = \frac{(\text{gpm})\,(2{,}800)\,(G)}{\mu \sqrt{A'}} \qquad \textbf{Eq 5-9}$$

$$\text{Re} = \frac{(12{,}700)\,(\text{gpm})}{\mu_s \sqrt{A'}} \qquad \textbf{Eq 5-10}$$

After the Reynolds number is determined, the factor K_v is obtained from Fig. 5-15. Divide the preliminary area (A′) by K_v to obtain an area corrected for viscosity. If the corrected area exceeds the standard orifice area chosen, repeat the procedure using the next larger standard orifice.

Sizing for Thermal Relief

The following may be used to approximate relieving rates of liquids expanded by thermal forces where no vapor is generated at relief valve setting and maximum temperature.[6] These calculations assume the liquid is non-compressible.

$$\text{gpm} = \frac{(B)\,(Q)}{500\,(G)\,(S)} \qquad \textbf{Eq 5-11}$$

Coefficients for this equation may be found in Fig. 23-2.

Typical values of the liquid expansion coefficient, B, at 60°F are:

API Gravity	Specific Gravity	B, 1/°F
Water	1.000	0.0001
3 - 34.9	1.052 - 0.850	0.0004
35 - 50.9	0.850 - 0.775	0.0005
51 - 63.9	0.775 - 0.724	0.0006
64 - 78.9	0.724 - 0.672	0.0007
79 - 88.9	0.672 - 0.642	0.0008
89 - 93.9	0.642 - 0.628	0.00085
94 - 100	0.628 - 0.611	0.0009
n-Butane	0.584	0.0011
Isobutane	0.563	0.0012
Propane	0.507	0.0016

For atmospheric conditions, such as solar radiation, the surface area of the item or line in question should be calculated. Solar radiation should be determined for the geographic area [typically 250-330 Btu/(hr • sq ft)] and applied to the surface area to approximate Q (Btu/hr).

When the flow rate is calculated, the necessary area for relief may be found from the turbulent liquid flow equations.

Sizing for Mixed Phase Relief

When a safety relief valve must relieve a liquid and gas, it may be sized by:

- Determining the rate of gas and the rate of liquid that must be relieved.
- Calculating the orifice area required to relieve the gas as previously outlined.
- Calculating the orifice area required to relieve the liquid as previously outlined.
- Summing total areas calculated for liquid and vapor to obtain the total required orifice area.

When the material to be relieved through a safety valve is a flashing liquid, it is difficult to know what percentage of the flashing actually occurs in the valve in order to estimate the total required orifice area using the above four steps. A conservative approach is to assume an isenthalpic expansion and that all the vapor is formed in the valve. Then, using enthalpy values, calculate the amount of vapor formed using Eq 5-12. Once the amounts of vapor and liquid assumed present in the valve are determined, the total required orifice area can be calculated.

$$\text{Weight Percent Flashing} = \left[\frac{h_{L1} - h_{L2}}{h_{G2} - h_{L2}}\right](100) \qquad \textbf{Eq 5-12}$$

The above sizing method for mixed flows and flashing liquids assumes sonic velocity does not exist. For sizing near sonic conditions where maximum flow may occur, use the method of Fauske[7] for sizing. API 520 Part 1 Appendix D presents a more rigorous method for two phase liquid vapor relief.

Sizing for Fire

The method of calculating the relief rate for fire sizing may be obtained from API RP 521[1], API Standard 2510[8], NFPA 58[9], and possibly other local codes or standards. Each of these references approach the problem in a slightly different manner.

Many systems requiring fire relief will contain liquids and/or liquids in equilibrium with vapor. Fire relief capacity in this situation is equal to the amount of vaporized liquid generated from the heat energy released from the fire and absorbed by the liquid containing vessel. The most difficult part of this procedure is the determination of heat absorbed.

NFPA 58[9] applies to LP-gas (propane and butane) systems. It presents the relief capacity requirements for vessels in terms of the rate of discharge of air, Q_a, and area of the vessel according to the equation:

$$Q_a = (53.632)\,(A_c)^{0.82} \qquad \textbf{Eq 5-13}$$

This relief capacity is at 120 percent of maximum allowable working pressure (20% overpressure is permissible for fire only).

After determination of Q_a, the required relief valve nozzle size is calculated using Eq 5-2 with the appropriate properties of air.

FIG. 5-12

Values of F_2 for Subcritical Flow[6]

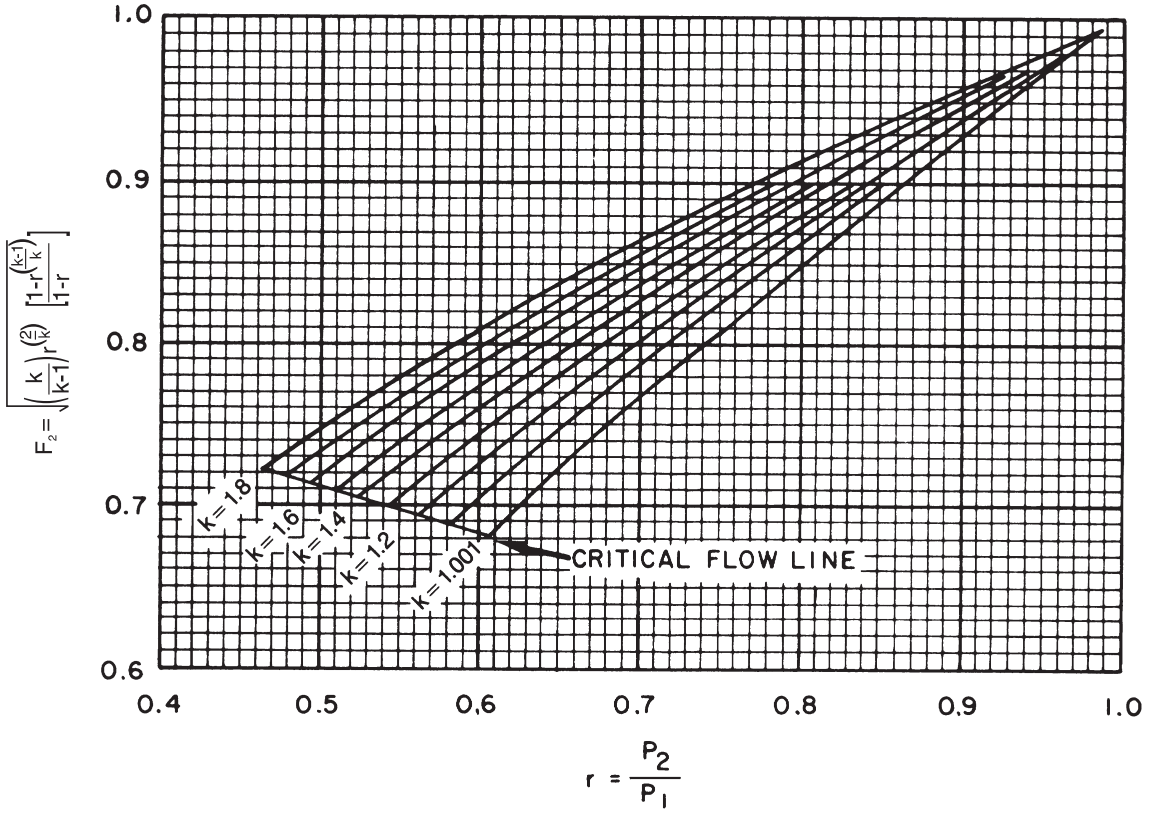

Courtesv American Petroleum Institute

API RP 521, applies to refineries and process plants. It expresses relief requirements in terms of heat input from the fire to the vessel where adequate drainage and fire fighting equipment exist.

$$Q = (21{,}000)\,(F)\,(A_w)^{0.82} \qquad \textbf{Eq 5-14}$$

The F factor in equation 5-14 is determined from Fig. 5-16. A_w in equation 5-14 is the total wetted surface, in square feet. Wetted surface is the surface wetted by liquid when the tank is filled to the maximum operating level. It includes at least that portion of a tank within a height of 25 feet above grade. In the case of spheres and spheroids, the term applies to that portion of the tank up to the elevation of its maximum horizontal diameter or a height of 25 feet, whichever is greater. Grade usually refers to ground grade but may be any level at which a sizable area of exposed flammable liquid is present.

The amount of vapor generated is calculated from the latent heat of the material at the relieving pressure of the valve. For fire relief only, this may be calculated at 121% of maximum allowable working pressure. All other conditions must be calculated at 110% of maximum allowable working pressure for single relief devices. When the latent heat is determined, required relieving capacity may be found by:

$$W = Q / H_l \qquad \textbf{Eq 5-15}$$

The value W is used to size the relief valve orifice using Eq 5-1 or Eq 5-4.

The latent heat of pure and some mixed paraffin hydrocarbon materials may be estimated using Fig. 12 of API RP 520[6]. Latent heat data may also be obtained by performing flash calculations. Mixed hydrocarbons will boil over a temperature range depending on the liquid composition; therefore, consideration must be given to the condition which will cause the largest vapor generation requirements due to the heat input of a fire. Precise unsteady state calculations are seldom necessary.

The latent heat will approach a minimum value near the critical. When no better information is available, a conservative minimum value of 50 Btu/lb is typically used.

For vessels containing only vapor, API RP 520 has recommended the following equation for determining required relief area based on fire[2]:

$$A = \frac{(F')\,(A_3)}{\sqrt{P_1}} \qquad \textbf{Eq 5-16}$$

F′ may be read from Fig. 5-17.

When a vessel is subjected to fire temperatures, the resulting metal temperature may greatly reduce the pressure rating of the vessel. Design for this situation should consider an

FIG. 5-13

Superheat Correction Factors for Safety Valves in Steam Service[6]

Set Pressure psig	**Total Temperature Superheated Steam, °F**									
	300	400	500	600	700	800	900	1000	1100	1200
	Correction Factor, K_{sh}									
15	1	0.98	0.93	0.88	0.84	0.8	0.77	0.74	0.72	0.7
20	1	0.98	0.93	0.88	0.84	0.8	0.77	0.74	0.72	0.7
40	1	0.99	0.93	0.88	0.84	0.81	0.77	0.74	0.72	0.7
60	1	0.99	0.93	0.88	0.84	0.81	0.77	0.75	0.72	0.7
80	1	0.99	0.94	0.88	0.84	0.81	0.77	0.75	0.72	0.7
100	1	0.99	0.94	0.89	0.84	0.81	0.77	0.75	0.72	0.7
120	1	0.99	0.94	0.89	0.84	0.81	0.78	0.75	0.72	0.7
140	1	0.99	0.94	0.89	0.85	0.81	0.78	0.75	0.72	0.7
160	1	0.99	0.94	0.89	0.85	0.81	0.78	0.75	0.72	0.7
180	1	0.99	0.94	0.89	0.85	0.81	0.78	0.75	0.72	0.7
200	1	0.99	0.95	0.89	0.85	0.81	0.78	0.75	0.72	0.7
220	1	0.99	0.95	0.89	0.85	0.81	0.78	0.75	0.72	0.7
240		1	0.95	0.9	0.85	0.81	0.78	0.75	0.72	0.7
260		1	0.95	0.9	0.85	0.81	0.78	0.75	0.72	0.7
280		1	0.96	0.9	0.85	0.81	0.78	0.75	0.72	0.7
300		1	0.96	0.9	0.85	0.81	0.78	0.75	0.72	0.7
350		1	0.96	0.9	0.86	0.82	0.78	0.75	0.72	0.7
400		1	0.96	0.91	0.86	0.82	0.78	0.75	0.72	0.7
500		1	0.96	0.92	0.86	0.82	0.78	0.75	0.73	0.7
600		1	0.97	0.92	0.87	0.82	0.79	0.75	0.73	0.7
800			1	0.95	0.88	0.83	0.79	0.76	0.73	0.7
1000			1	0.96	0.89	0.84	0.78	0.76	0.73	0.71
1250			1	0.97	0.91	0.85	0.8	0.77	0.74	0.71
1500				1	0.93	0.86	0.81	0.77	0.74	0.71
1750				1	0.94	0.86	0.81	0.77	0.73	0.7
2000				1	0.95	0.86	0.8	0.76	0.72	0.69
2500				1	0.95	0.85	0.78	0.73	0.69	0.66
3000					1	0.82	0.74	0.69	0.65	0.62

Courtesy American Petroleum Institute

FIG. 5-14

Variable or Constant Back-Pressure Sizing Factor K_W on Balanced Bellows Safety-Relief Valves (Liquids Only)[6]

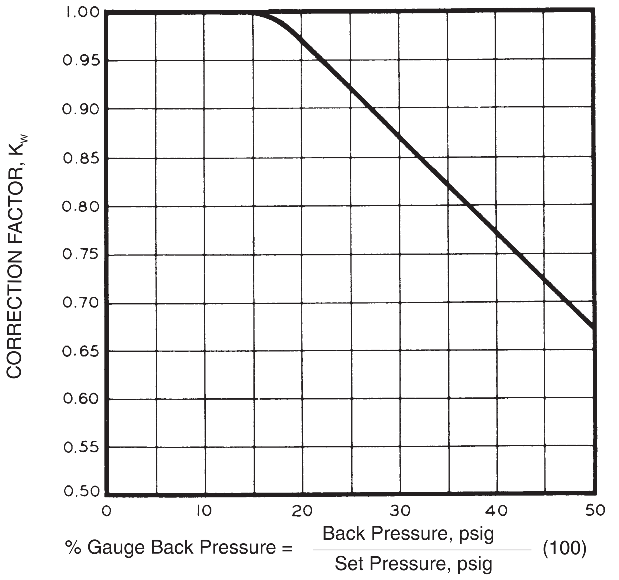

Note: The above curve represents a compromise of the values recommended by a number of relief-valve manufacturers. This curve may be used when the make of the valve is not known. When the make is known, the manufacturer should be consulted for the correction factor.

Courtesy American Petroleum Institute

emergency depressuring system or a water spray system to keep metal temperatures cooler. A discussion on vapor depressuring may be found in API RP 521, paragraph 3.19. For additional discussion on temperatures and flowrates due to depressurization and fires refer to Reference 15.

RELIEF VALVE INSTALLATION

Relief valve installation requires careful consideration of inlet piping, pressure sensing lines (where used), and startup procedures. Poor installation may render the safety relief valve inoperable or severely restrict the valve's relieving capacity. Either condition compromises the safety of the facility. Many relief valve installations have block valves before and after the relief valve for in-service testing or removal; however, these block valves must be sealed or locked opened.

Inlet Piping

The proper design of inlet piping to safety relief valves is extremely important. Relief valves should not be installed at physically convenient locations unless inlet pressure losses are given careful consideration. The ideal location is the direct connection to protected equipment to minimize inlet losses. API RP 521, Part II recommends a maximum inlet pressure loss to a relief valve of three percent of set pressure. This is also an ASME Code requirement. This pressure loss shall be the total of the inlet loss, line loss, and the block valve loss (if used). The loss should be calculated using the maximum rated flow through the safety relief valve.

Discharge Piping

An adequate discharge pipe size for direct spring operated valves is critical. Improperly sized, it may cause valve failure. Pressure losses may occur in discharge headers causing excessive back pressure and excessive back pressure may cause the relief valve to close. When the valve closes, the back pressure in the discharge header decreases,

FIG. 5-15

Capacity Correction Factor Due to Viscosity

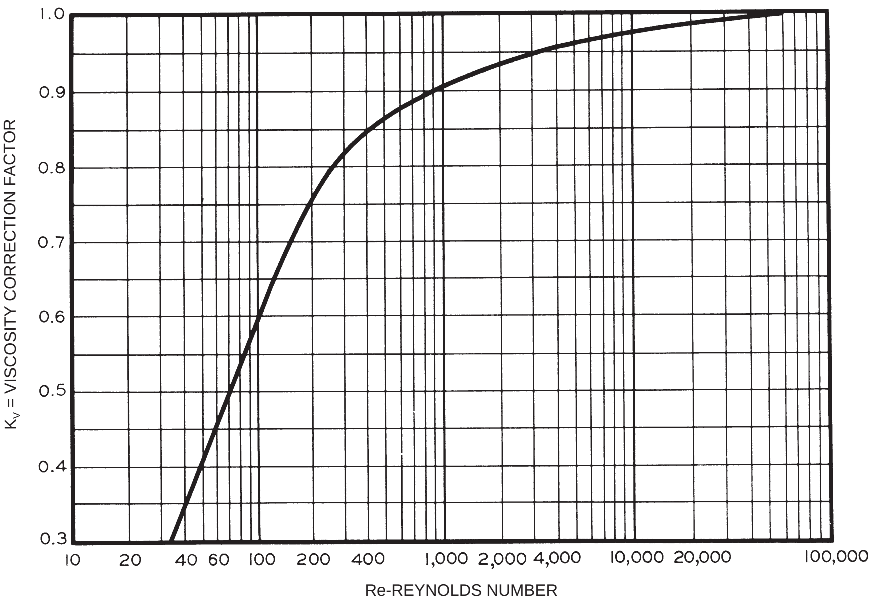

Courtesy American Petroleum Institute

FIG. 5-16

Environmental Factors[8]

Environment	F Factor
Bare metal vessel	1.0
Insulation thickness: [a,b] (inches)	
1	0.30
2	0.15
4	0.075
6	0.05
8	0.037
10	0.03
12 or more[c]	0.025
Concrete thickness, in inches	Double above F factor for equal thickness.
Water-application facilities[d]	1.0
Depressuring and emptying facilities[e]	1.0
Underground storage	0.0
Earth-covered storage above grade	0.03

Notes:

[a] To take credit for reduced heat input, the insulation shall resist dislodgment by fire-hose stream, shall be noncombustible, and shall not decompose at temperatures up to 1,000 degrees Fahrenheit. If insulation does not meet these criteria, the environmental F factor for a bare vessel should be used.

[b] These factors are based on an arbitrary thermal conductivity value of 4 British thermal units per hour per square foot per degree Fahrenheit per inch of insulation and a temperature differential of 1,600 degrees Fahrenheit when using a heat input value of 21,000 British thermal units per hour per square foot in accordance with conditions assumed in API RP 520. Where these conditions do not exist, engineering judgment should be exercised either in selecting a higher F factor or in providing other means of protecting tanks from fire exposure.

[c] The insulation credit is arbitrarily limited to the F factor shown for 12 inches of insulation even though greater thickness may be used. A further credit, if taken, would result in a relieving device size which would be impractically small but may be used if warranted by design considerations.

[d] Water films covering the metal surfaces can, under ideal conditions, absorb substantially all incident radiation. However, the reliability of effective water application is dependent upon many factors. Freezing weather, high winds, clogging of system, unreliability of water supply, and tank surface conditions are a few factors which may prevent adequate or uniform water coverage. Because of these uncertainties, the use of an environment F factor other than 1.0 for water spray is generally not used.

[e] Depressuring devices may be used, but no credit for their use should be allowed in sizing pressure relief valves for fire exposure.

Courtesy American Petroleum Institute

and the valve re-opens. Rapid cycling can occur as this process is repeated. In addition, set pressure of other conventional valves connected to the same discharge system may be adversely affected by such excessive back pressure. See Fig. 5-18.

Lift and set pressures of pilot operated relief valves with the pilot vented to the atmosphere are not affected by back pressure; however, if the discharge pressure can exceed the inlet pressure (e.g., tanks storing low vapor pressure material), a back-flow preventer (vacuum block) must be used.

Balanced relief valve set pressure will not be as significantly affected by back pressure as direct spring operated valves. Balanced relief valves will suffer reduced lift as back pressure increases. This is shown in application of the K_b factor for balanced valves (Fig. 5-11).

The valve relieving capacity of any relief valve is restricted by back pressure if the discharge pressure exceeds the critical-flow pressure.

Discharge piping must be at least the same size as the valve outlet but is generally larger in diameter than the valve outlet size to limit back pressure.

A useful article on the sensitivity of relief valves to proper inlet and outlet piping design has been published by Van Boskirk.[13]

Reactive Force

On high pressure valves, the reactive forces during relief are substantial and external bracing may be required. See equations in API RP 520 for computing this force.

Rapid Cycling

Rapid cycling can occur when the pressure at the valve inlet decreases at the start of relief valve flow because of excessive pressure loss in the piping to the valve. Under these conditions, the valve will cycle at a rapid rate which is referred to as "chattering." The valve responds to the pressure at its inlet. If the pressure decreases during flow below the valve reseat point, the valve will close; however, as soon as the flow stops, the inlet pipe pressure loss becomes zero and the pressure at the valve inlet rises to tank pressure once again. If the vessel pressure is still equal to or greater than the relief valve set pressure, the valve will open and close again. The inlet pressure loss should be limited to 3%.

An oversized relief valve may also chatter since the valve may quickly relieve enough contained fluid to allow the vessel pressure to momentarily fall back to below set pressure only to rapidly increase again. Rapid cycling reduces capacity and is destructive to the valve seat in addition to subjecting all the moving parts in the valve to excessive wear. Excessive back pressure can also cause rapid cycling as discussed above.

Resonant Chatter

Resonant chatter can occur with safety valves when the inlet piping produces excessive pressure losses at the valve inlet and the natural acoustical frequency of the inlet piping approaches the natural mechanical frequency of the valve's basic moving parts. The higher the set pressure, the larger the valve size, or the greater the inlet pipe pressure loss, the more likely resonant chatter will occur. Resonant chatter is uncontrollable; that is, once started it cannot be stopped unless the pressure is removed from the valve inlet. In actual application, however, the valve can self-destruct before a shutdown can take place because of the very large magnitude of the impact forces involved.

Seat Leakage of Relief Valves

Seat leakage is specified for conventional direct spring operated metal-to-metal seated valves by API RP 527. The important factor in understanding the allowable seat leak is that it is stated at 90% of set point. Therefore, unless special seat lapping is specified or soft seat designs used, a valve operating with a 10% differential between operating and set pressures may be expected to leak.

There are no industry standards for soft seated valves. Generally leakage is not expected if the valve operates for one minute at 90% of set pressure and, in some cases, no leakage at 95%, or even higher. Longer time intervals could promote leakage. Application of soft seated valves is limited by operating temperatures. Manufacturer guidelines should be consulted.

RELIEF SYSTEM PIPING DESIGN

Grouping of Systems

It is not unusual to relieve non-flammable and non-toxic materials, such as air, steam, carbon dioxide, and water directly to the atmosphere. To protect personnel, precautions need to be taken in venting hot, cold, or high pressure materials.

In certain cases, hydrocarbon relief vapor streams may be discharged to the atmosphere. However, the decision to discharge hydrocarbons or other flammable or hazardous vapors to the atmosphere must ensure that disposal can be accomplished without creating a hazard, such as formation of flammable mixtures at grade level or on elevated structures, exposure of personnel to toxic or suffocating atmosphere, ignition of relief streams at the point of emission, excessive noise levels, corrosion, or air pollution.

Depending on plot plan, the range of equipment design pressures, desirability of isolating certain streams, etc., it may prove desirable to provide two or more flare systems, such as separation of high pressure and low pressure headers. Other factors influencing this decision include stream temperatures, compositions, quantities, and economics.

Load Determination

The maximum relief load anticipated for each relief system may be determined by tabulating the relief loads discharging to each header system at the conditions expected to exist in the system. For further discussion, see Section 5.2 of API RP 521.

Back Pressure Consideration

After load determination, it is necessary to decide on the location of the flares, and size of the headers and flare lines. Location and height of the flares must consider radiation heat and emissions. This will involve fixing the maximum back pressure for the system and choosing between conventional, pilot operated, or balanced safety valves for the various relief stations. Factors which tend to justify balanced valves are a potential for high flare header back pressure and economic line sizing criteria.

FIG. 5-17

Relief-Valve Factors for Noninsulated Vessels in Gas Service Exposed to Open Fires[6]

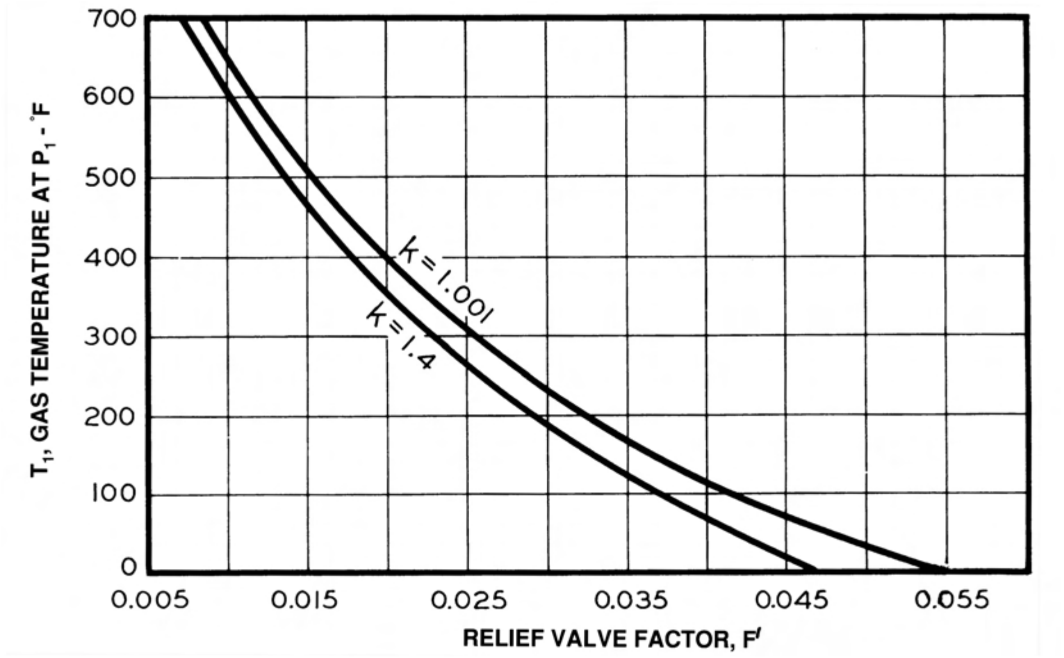

Notes:

1. Fig. 5-9 gives k values for some gases; for others, the values can be determined from the properties of gases as presented in any acceptable reference work.
2. These curves are for vessels of carbon steel.
3. These curves conform to the relationship $F' = \left(\frac{0.1406}{C_1 K_d}\right)\left(\frac{\Delta T^{1.25}}{T_1^{0.6506}}\right)$
4. The curves are drawn using 1,100 degrees Fahrenheit as the vessel wall temperature. This value is a recommended maximum temperature for the usual carbon steel plate materials whose physical properties at temperatures in excess of 1,100 degrees Fahrenheit show signs of undesirable tendencies. Where vessels are fabricated from alloy materials, the value for Tw should be changed to a more proper recommended maximum.

It is recommended that the minimum value of F′ = 0.01 (when it is unknown use 0.045).

FIG. 5-18

Typical Effects of Variable Back Pressure on Capacity of Conventional Safety-Relief Valves[6]

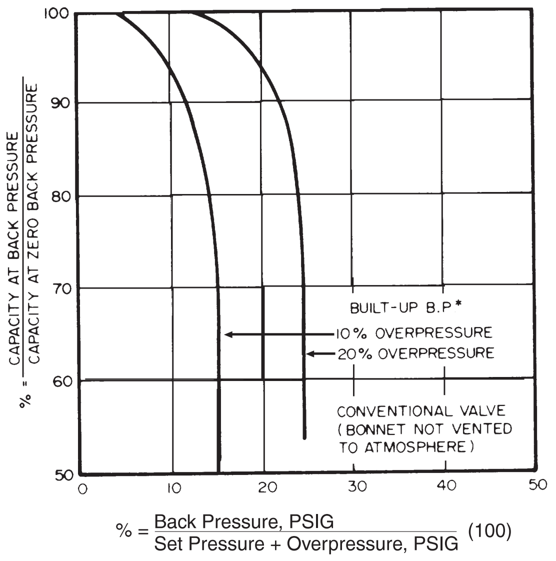

Sizing Methods

Line sizing for flare headers and relief lines requires the use of compressible flow equations. Computer programs are available for use in sizing flare headers. A calculation method is outlined below:

1. Start at the flare tip, where the outlet pressure is atmospheric, use design flows and work toward the individual relief valves (pressure drop across the tip will vary with make — check with the manufacturer). Typical tip drop is 55" water (see Eq 5-24). Flare tip velocity can vary from Mach 0.2 for open pipe flares to Mach 0.5 or greater for engineered flare tips and wind shields. Pressure drop through seals must also be included.
2. Establish equivalent pipe lengths between points in the system and establish losses through fittings, expansion, and contraction losses.
3. Limit the maximum allowed velocity at any part of the flare system to Mach 0.7 (average velocity of Mach 0.4 is recommended).
4. Estimate properties of gases in the headers from the following mixture relationships (i indicates the ith component).

$$MW = \Sigma W_i / \Sigma (W / MW)_i \qquad \textbf{Eq 5-17}$$

$$T = \Sigma W_i T_i / \Sigma W_i \qquad \textbf{Eq 5-18}$$

$$\mu = \Sigma x_i \mu_i (MW)_i^{0.5} / \Sigma x_i (MW)_i^{0.5} \qquad \textbf{Eq 5-19}$$

5. Calculate the inlet pressure for each section of the line by adding the calculated pressure drop for that section to the known outlet pressure.
6. Calculate sections of pipe individually using the inlet pressure of a calculated section as the outlet pressure for the new section.
7. Continue calculations, working towards the relief valve.
8. Check calculated back pressure at the relief valve against the maximum allowable back pressure (MABP). The calculated back pressure should be less than the MABP.
9. Limit the MABP to about 40% of the set pressure for balanced-bellows relief valves (consult valve manufacturer), and 10% of the set pressure for conventional relief valves.
10. Adjust line size of headers until the calculated back pressure does not exceed the MABP for each valve in the system.

The method outlined above employs sizing equations which assume isothermal flow in the flare header. This is adequate for most uses; however, if the actual flow condition differs greatly from isothermal, the use of more complex equations and methods is required to predict pressure and temperature profiles for the headers.

The choice of piping material other than carbon steel may be dictated by temperatures and pressures in some parts of the flare system. Flare systems relieving fluids that produce cryogenic temperatures may require special metallurgy.

KNOCKOUT DRUMS

Gas streams from reliefs are frequently at or near their dew point, where condensation may occur. A knockout drum is usually provided near the flare base, and serves to recover liquid hydrocarbons, prevent liquid slugs, and remove large (300-600 micron diameter) liquid particles. The knockout drum reduces hazards caused by burning liquid that could escape from the flare stack. All flare lines should be sloped toward the knockout drum to permit condensed liquid to drain into the drum for removal. Liquid traps in flare lines should be avoided. If liquid traps are unavoidable, a method for liquid removal should be provided. The locating of the flare knockout drum also needs to take into account radiation effect from the burning flare.

A seal may be provided in the flare system between the knockout drum and the faretip to prevent flashbacks. For added safety, a small amount of fuel gas may be used to continuously purge the system and eliminate the entrance of air (oxygen).

Sizing

The diameter of a vertical knockout drum can be calculated from the maximum allowable vapor velocity using the following equation:

$$U_d = (1.15)\sqrt{\frac{(g)\,(D)\,(\rho_L - \rho_v)}{(\rho_v)\,(C)}} \qquad \textbf{Eq 5-20}$$

This equation may be used to calculate the allowable velocity based on a particle size of 300 to 600 microns (0.001 to 0.002 ft). The value of C in Eq 5-20 is determined using Fig. 5-19. API RP 521 is a common reference for designing flare knockout drums.

FLARE SYSTEMS

Sizing and safety in designing a flare facility involve consideration of thermal radiation, explosion hazards, liquid carryover, noise, and ground level concentration of toxic material.

Types

Flares can be classified as:

1. Pipe Flares — Vertical or horizontal pipes with external ignition pilot.
2. Smokeless Flares — Vertical, single, or multiple burners designed to properly mix adequate oxygen from the air with relieved vapors for complete combustion.
3. Endothermic Flares — Elevated incinerators for low heat content streams.

Pipe Flares — This type of flare is used for hydrocarbon vapor streams such as methane, hydrogen, and carbon monoxide which produce limited smoke when burned. Heavier hydrocarbons may be burned but with smoking. Velocity for "open-pipe" flares should be limited to Mach 0.4 to minimize flame lift-off.

Smokeless Flares — Smokeless flares are used for smokeless disposal of hydrocarbon streams. These flares use a variety of methods such as steam, high pressure fuel gas, water spray, an air blower, or high velocity vortex action to mix air with the gas.

Fired or Endothermic Flares — These flares are a form of elevated incinerator for use on low heat waste streams, such as sulfur plant tail gas. When the heat content of the waste stream is below 115 Btu/scf, a fired flare with a high energy assist gas may be required for complete combustion.

Thermal Radiation

Thermal radiation is a prime concern in flare design and location. Thermal radiation calculations must be done to avoid dangerous exposure to personnel, equipment, and the surrounding area (trees, grass). The following calculation procedure is a convenient means to find the height of the flare stack and the intensity of radiation at different locations. For flares with a smokeless capacity exceeding approximately 10 percent, methods which account for gas composition, mixing, and smoke as presented in API 521 or as summarized in reference 14 should be used. Flare vendors should be consulted for large flowrates or when smokeless requirements exceed approximately 10 percent. Calculations given by API 521 or other methods may yield different answers.

Spherical Radiation Intensity Formula:

$$I = \frac{(W_f)\,(NHV)\,(\varepsilon)}{4\,\pi\,(R^2)} \qquad \textbf{Eq 5-21}$$

This equation has been found to be accurate for distances as close to the flame as one flame length.

Equation 5-21 is valid so long as the proper value of fraction of heat radiated, ε, is inserted. Classically, ε has been considered a fuel property alone. Brzustowski et al.[10] experimentally observed a dependence of ε on jet exit velocity. Other authors have presented models that consider the carbon particle concentration in the flame. The fraction of heat radiated is a function of many variables including gas composition, tip diameter, flare burner design, flowrate and velocity, flame temperature, air-fuel mixing, and steam or air injection; therefore a flare supplier should be consulted to determine the specific values for a given application. A list of vendor recommended

FIG. 5-19

Determination of Drag Coefficient[1]

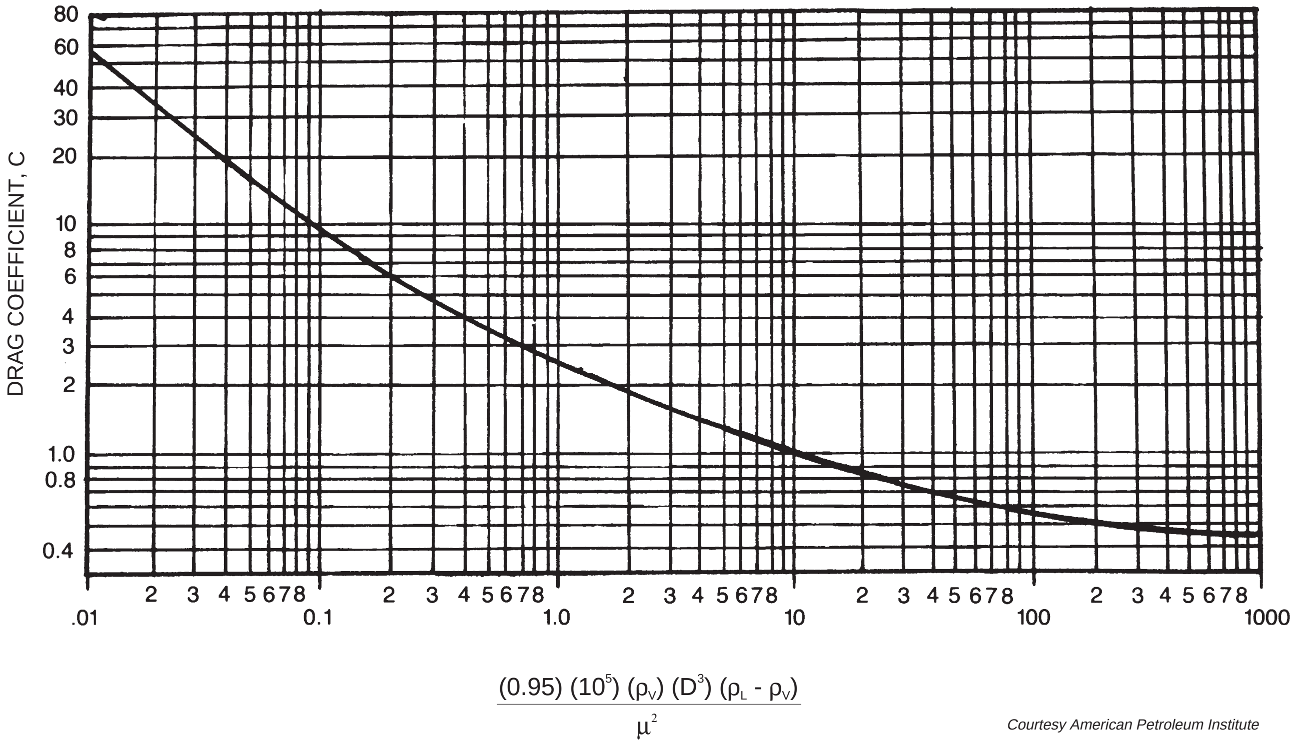

Courtesy American Petroleum Institute

FIG. 5-20

Fraction of Heat Radiated Values for Flared Gases

Carbon Monoxide	0.075
Hydrogen	0.075
Hydrogen Sulfide	0.070
Ammonia	0.070
Methane	0.10
Propane	0.11
Butane	0.12
Ethylene	0.12
Propylene	0.13

The maximum value of ε for any gas is 0.13.

fraction of heat radiated values for the most frequently flared gases is shown in Fig. 5-20.

To calculate the intensity of radiation at different locations, it is necessary to determine the length of the flame and its angle in relation to the stack (see Fig. 5-21). A convenient expression to estimate length of flame, L_f, is shown below, based on information from equipment suppliers.

$$L_f = (10)\,(d)\sqrt{\frac{\Delta P_w}{55}} \qquad \textbf{Eq 5-22}$$

or from API RP 521,

$$L_f = 3.94\,[(Q_r)\,(10^{-6})]^{0.474} \qquad \textbf{Eq 5-23}$$

For conventional (open pipe) flares, an estimate of total flare pressure drop is 1.5 velocity heads based on nominal flare tip diameter. The pressure drop equivalent to 1 velocity head is given by:

$$\Delta P_w = \frac{(27.7)\,\rho\,V^2}{(2\,g_c)\,(144)} = \frac{\rho\,V^2}{344.8} \qquad \textbf{Eq 5-24}$$

ΔP_w is the pressure drop at the tip in inches of water. After determining tip diameter, d, using Eq 5-25, and the maximum required relieving capacity, flame length for conditions other than maximum flow can be calculated using Eq 5-22 and Eq 5-24.

Common practice is to use tip velocities of up to Mach 0.5 for short term emergency flows and Mach 0.2 for maximum continuous flowing.

$$d = \left(\sqrt{\frac{1.702 \cdot 10^{-5} \cdot W}{P_2 \bullet M} \cdot \left(\frac{Z \bullet T}{k \bullet MW}\right)^{0.5}}\right) \bullet 12 \qquad \textbf{Eq 5-25}$$

Sonic velocity of a gas is given by:

$$a = 223\sqrt{k\,\frac{T}{MW}} \qquad \textbf{Eq 5-26}$$

The center of the flame is assumed to be located at a distance equal to 1/3 the length of the flame from the tip.

The angle of the flame results from the vectorial addition of the velocity of the wind and the gas exit velocity.

$$\theta = \tan^{-1}\left(\frac{V_w}{V_{ex}}\right) \qquad \textbf{Eq 5-27}$$

$$V_{ex} = 550\sqrt{\frac{\Delta P}{55}} \qquad \textbf{Eq 5-28}$$

Note: API gives a greater lean angle

The coordinates of the flame center with respect to the tip are:

$$X_c = (L_f / 3)\,(\sin\theta) \qquad \textbf{Eq 5-29}$$

$$Y_c = (L_f / 3)\,(\cos\theta) \qquad \textbf{Eq 5-30}$$

The distance from any point on the ground level to the center of the flame is:

$$R = \sqrt{(X - X_c)^2 + (H_s + Y_c)^2} \qquad \textbf{Eq 5-31}$$

Equations 5-21 and 5-31 allow radiation to be calculated at any location.

The stack height results from considering the worst position vertically below the center of the flame for a given condition of gas flow and wind velocities (see Fig. 5-21).

$$R^2 = (H_s + Y_c)^2 \qquad \textbf{Eq 5-32}$$

$$R = (H_s + Y_c) \qquad \textbf{Eq 5-33}$$

$$H_s = (R - Y_c) \qquad \textbf{Eq 5-34}$$

$$H_s = R - [(L_f / 3)\,(\cos\theta)] \qquad \textbf{Eq 5-35}$$

This method assumes that for different wind velocities the length of the flame remains constant. In reality this is not true.

FIG. 5-21

Dimensional References for Sizing a Flare Stack

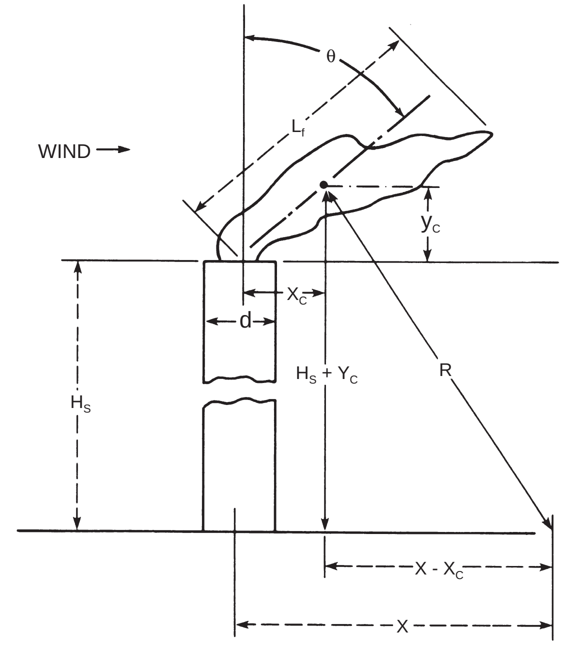

Courtesy American Petroleum Institute

When the wind blows at more than 60 miles per hour, the flame tends to shorten. For practical design, this effect is neglected.

The radiation levels commonly used for designs are: (These do not include solar heat.)

For equipment protection	5000 Btu/(hr • sq ft)
Personnel, few seconds escape only	3000 Btu/(hr • sq ft)
Personnel, one minute exposure	2000 Btu/(hr • sq ft)
Personnel, several minutes short exposure	1500 Btu/(hr • sq ft)
Personnel, continuous exposure	500 Btu/(hr • sq ft)

Equipment protection should be evaluated on a case by case basis, as various pieces of equipment have different protection needs.

Solar radiation adds to the calculated flame radiation and is dependent upon specific atmospheric conditions and site location. A typical design range is 250 to 330 Btu/(hr • sqft).

The cooling effect of fluids flowing inside piping, along with wind cooling, can be used to reduce thermal radiation effects.

Smokeless Operation

Most smokeless flares utilize outside motive forces to produce efficient gas/air mixing and turbulence from the momentum transferred by the high velocities of the external motive jet streams (steam, fuel, gas, etc.). The assist medium mass requirements are low for steam and fuel gas because of their high velocity relative to the flare gas. Typical values for steam or fuel gas are from 0.20 to 0.50 pounds of assist gas per pound of hydrocarbon flow.

Eq 5-35 predicts steam use for a given hydrocarbon molecular weight gas to be burned in a smokeless flare.

$$W_{stm} = W_{hc}\left[0.68 - \left(\frac{10.8}{MW}\right)\right] \qquad \textbf{Eq 5-36}$$

The water spray and air blower methods provide necessary mixing with low velocities and greater mass flow rates. For water spray flares, typical water rates are 1 to 5 pounds of water per pound of hydrocarbon. These rates are highly dependent upon the method of water injection and the degree of atomization of the water stream. Wind also has a significant effect on water spray flares and may greatly reduce their effectiveness. The blower assisted flare uses approximately 3 to 7 pounds of air per pound of hydrocarbon to produce smokeless operation. Forced draft from a blower assists combustion and air/gas turbulence, assisting smokeless operation. Tip velocities up to Mach 0.5 are common.

Pilots and Ignition

Reliable pilot operation under all wind and weather conditions is essential. Flaring operations are for the most part intermittent and non-scheduled. The flare must be instantly available for full emergency duty to prevent any possibility of a hazardous or environmentally offensive discharge to the atmosphere. Wind-shields and flame-retention devices may be used to ensure continuous piloting under the most adverse conditions. Most pilots are designed to operate at wind velocities of 100 miles per hour and higher.

Most flares employ a remote pilot ignition system.

Seals

An effective seal is required to prevent air from entering the flare system and forming an explosive mixture prior to the designed ignition point. Refer to API RP 521 for recommended seal methods.

Location and Regulations

Flare design must comply with local, state, and federal regulations regarding pollution, noise, and location. Permits are usually required prior to construction.

APPLICABLE CODES, STANDARDS, AND RECOMMENDED PRACTICES

The designers of relief systems should be familiar with the following documents related to pressure relief valves in process plants and natural-gas systems.

ASME Codes — ASME Boiler and Pressure Vessel Code Section I — Paragraphs PG-67 through PG-73, and Section VIII — Paragraphs UG-125 through UG-136 and appendices M and 11.

In the "scope", certain vessels are excluded from ASME Code requirements, including all vessels under 15 psig operating pressure.

ANSI Codes — ANSI B31.1 Power Piping.

ANSI B31.3 — Chemical Plant and Petroleum Refining Piping

ANSI B31.8 — Gas Transmission & Distribution Systems.

API Publications — API RP 520 Part I, Design — This API design manual is widely used for fire sizing of relief valves on both liquid and gas filled vessels: (a) liquid vessels — Section 4, 5, and 6; (b) gas-filled vessels — Appendix C.3. This RP covers only vessels above 15 psig.

API RP 520 Part II, Installation — This includes: (a) recommended piping practices, (b) calculation formulae for reactive forces, and (c) precautions on preinstallation handling and dirt.

API RP 521 Guide for Pressure - Relieving and Depressuring Systems, September, 1982, 2nd Edition — An excellent document on everything from causes of overpressure through flare stacks.

API Guide for Inspection of Refinery Equipment — Chapter XVI Pressure Relieving Devices — Gives (a) guide for inspection of record keeping, and (b) frequency of inspection, paragraph 1602.03.

API Std. 526 — Flanged Steel Safety Relief Valves for Use in Petroleum Refineries — Gives industry standards as to dimensions, pressure-temperature ratings, maximum set pressures, body materials.

API Std. 527 — Commercial Seat Tightness of Safety-Relief Valves with Metal-to-Metal Seats — Permissible leakage of conventional and bellows valves and testing procedure.

API Std. 528 — Standard for Safety Relief Valve Nameplate Nomenclature — Standard covering information that should go on the nameplate of a safety relief valve.

API Std. 620 — Recommended Rules for Design and Construction of Large Welded-Low-Pressure Storage Tanks — Covers tanks at less than 15 psig. Section 6 of this document gives recommendations on relief valve types and sizing.

API Std. 2000 — Venting Atmospheric and Low-pressure Storage Tanks (Non-Refrigerated and Refrigerated) — Covers tanks at less than 15 psig. Capacity requirement calculations for both pressure and vacuum. Also fire-sizing method for low pressure tanks.

API Std. 2508 — Design and Construction of Ethane and Ethylene Installations at Marine and Pipeline Terminals, Natural Gas Processing Plants, Refineries, Petrochemical Plants, and Tank Farms — Covers the design, construction, and location of refrigerated (including autorefrigerated) liquefied ethane and ethylene installations, which may be associated with one or more of the following: railroad, truck, pipeline stations, or marine loading or unloading racks or docks.

API Std. 2510 — Design and Construction of LPG Installations at Marine and Pipeline Terminals, Natural-Gas-Processing Plants, Refineries, Petrochemical Plants, and Tank Farms.

API Bulletin 2521 — Use of Pressure Vacuum Vent Valves for Atmospheric Pressure Tanks to Reduce Evaporation Loss.

NFPA Publications — NFPA 58 and 30 — These cover storage and handling of liquefied petroleum gases. Section B.10 covers safety devices installation and testing.

NFPA 59 — Covers LP-gas, Utility Plants

NFPA 59A — Covers LN Gas, Storage and Handling

OSHA Publications — OSHA Title 29, Part 1910 - Part 1910 includes handling, storage, and safety requirements for LPG and ammonia.

CGA (Compressed Gas Association) Publications — Series of standards covering transportation, handling, and storage of compressed gases including:

Pamphlet S-1.2 Safety Relief Device Standards

  Part 2: Cargo and portable tanks for compressed gases.

Pamphlet S-1.3 Safety Relief Service Standards

  Part 3: Compressed Gas Storage Containers.

REFERENCES

1. API RP 521 — Guide for Pressure-Relieving and Depressuring Systems, American Petroleum Institute, 1220 L Street, NW, Washington, DC 20005.
2. ASME Boiler and Pressure Vessel Code, Section I and Section VIII, American Society of Mechanical Engineers (ASME), New York, NY.
3. ANSI B31.3 — Chemical Plant and Petroleum Refinery Piping, The American Society of Mechanical Engineers (ASME), 345 East 47th Street, New York, NY 10017.
4. ANSI B31.8 — Gas Transmission and Distribution Piping, The American Society of Mechanical Engineers (ASME), 345 East 47th Street, New York, NY 10017.
5. API Standard 527 — Commercial Seat Tightness of Safety Relief Valves with Metal-to-Metal Seats, American Petroleum Institute, 1220 L Street, NW, Washington, DC 20005.
6. API RP 520 — Recommended Practice for the Design (Part I) and Installation (Part II) of Pressure Relieving Systems in Refineries, American Petroleum Institute, 1220 L Street, NW, Washington, DC 20005.
7. Min, T. C., Fauske, H. K., Patrick, M., Industrial Engineering Chemical Fundamentals, (1966), pp. 50-51.
8. API 2510 — Design and Construction of LPG Installations at Marine and Pipeline Terminals, Natural-Gas-Processing Plants, Refineries, Petrochemical Plants, and Tank Farms, American Petroleum Institute, 1220 L Street, NW, Washington, DC 20005.
9. NFPA 30, 58, 59 & 59A, National Fire Protection Association (NFPA), Batterymarch Park, Quincy, Massachusetts 02269.
10. Brzustowski, T. A., "Flaring In The Energy Industry", Process Energy Combustion Science, Pergamon Press, Great Britain, V. 2, pp. 129-144, 1976.
11. Straitz III, J. F., Nomograms "Determining Proper Flame Tip Diameter and Height", Oil Gas and Petroleum Equipment, Tulsa, Oklahoma, July and August, 1979.
12. "Recommendations and Guidelines — Gasoline Plants, Pamphlet 301", Oil Insurance Association, 175 West Jackson Blvd., Chicago, Illinois 60604, August 1971.
13. Van Boskirk, B. A., "Sensitivity of Relief Valves to Inlet and Outlet Line Lengths," Chemical Engineering, August 23, 1982, pages 77-82.
14. Schwartz, Robert E. and White, Jeff W., "Predict Radiation From Flares," Chemical Engineering Progress, Vol. 93, pp. 42-49, July 1997 .
15. Overa, Sverre J., Strange, Ellen and Salater, Per, "Determination of Temperatures and Flare Rates During Depressurization and Fire," GPA Convention, San Antonio, Texas, 15–17 March, 1993.

BIBLIOGRAPHY

1. Chiu, C. H. "Apply Depressuring Analysis to Cryogenic Plant Safety", Hydrocarbon Processing, November 1982, Pages 255-264.
2. Kandell, Paul "Program Sizes Pipe and Flare Manifolds for Compressible Flow", Chemical Engineering, June 29, 1981, Pages 89-93.
3. Powell, W. W., and Papa, D. M., "Precision Valves for Industry", Anderson, Greenwood Company, Houston, Texas, 1982, Pages 52-61.
4. Straitz III, J. F., "Solving Flare-Noise Problems", Inter. Noise 78, San Francisco 8-10, May 1978, Pages 1-6.
5. Straitz III, J. F., "Flaring for Safety and Environmental Protection", Drilling-DCW, November 1977.
6. Straitz III, J. F., "Make the Flare Protect the Environment", Hydrocarbon Processing, October 1977.
7. Tan, S. H., "Flare Systems Design Simplified", Hydrocarbon Processing (Waste Treatment & Flare Stack Design Handbook) 1968, Pages 81-85.

SECTION 6

Storage

This section provides general guidelines that will aid in the selection of the proper type of storage to be used in a particular application. Fig. 6-2 will assist with the selection. Various codes, standards, and recommended practices should be used

FIG. 6-1

Nomenclature

A', B', C', D' = coefficients used in Fig. 6-14
A = surface area, ft^2
b = ellipse minor radius, ft
B_{max} = vapor pressure of liquid at maximum surface temperature, psia
B_{min} = vapor pressure of liquid at minimum surface temperature, psia
D = cylinder diameter, ft
$f(Zc)$ = cylinder partial volume factor, dimensionless
$f(Ze)$ = head partial volume factor, dimensionless
H = correction factor for horizontal surfaces
H_n = depth of liquid in cylinder, ft
H_p = height of liquid, ft
H_T = height, ft
k = thermal conductivity, Btu/[(hr • sq ft • °F)/in.]
K = equilibrium constant, y/x, dimensionless
K_l = head coefficient, dimensionless
L = length, ft
MW_i = molecular weight of component i, lb/lb mole
n_g = number of moles of vapor
n_i = number of moles of component i
P = absolute pressure, psia
P_a = atmospheric pressure, psia
P_c = critical pressure, psia
P_R = reduced pressure, dimensionless
Q = heat flow, Btu/sq ft • hr
R = gas constant, 10.73 psia • ft^3/(R • lb mole)
R_l = cylinder radius, ft
R_i = thermal resistance of insulation (X/k), (hr • sq ft • °F)/Btu
T = temperature, °R
T_a = ambient air temperature, °F
T_c = critical temperature, °R or °F
T_f = temperature drop through surface air film, °F
T_h = hot face temperature, °F
T_i = temperature drop through insulation, °F
T_m = mean temperature of insulation, °F
T_{max} = maximum average temperature, °F
T_{min} = minimum average temperature, °F
T_R = reduced temperature, dimensionless
T_s = outside surface temperature, °F
V = volume, ft^3
W = width, ft
x_i = mole fraction of component i in the liquid phase
X = insulation thickness, in.
y_i = mole fraction of component i in the vapor phase
Z = compressibility factor

Greek

α = radians
Δ = absolute internal tank pressure at which vacuum vent opens, psia
π = 3.14159...
ϕ = required storage pressure, psia
Σ = summation
DP = design pressure is the pressure at which the most severe condition of coincident pressure and temperature expected during normal operation is reached. For this condition, the maximum difference in pressure between the inside and outside of a vessel or between any two chambers of a combination unit shall be considered. (ASME Code for Unfired Pressure Vessels, Section VIII)
MAWP = maximum allowable working pressure shall be defined as the maximum positive gauge pressure permissible at the top of a tank when in operation, which is the basis for the pressure setting of the safety-relieving devices on the tank. It is synonymous with the nominal pressure rating for the tank as referred to in API Standards 620 and 650.
OP = operating pressure is the pressure at which a vessel normally operates. It shall not exceed the maximum allowable working pressure of the vessel. A suitable margin should be allowed between the pressure normally existing in the gas or vapor space and the pressure at which the relief valves are set, so as to allow for the increases in pressure caused by variations in the temperature or gravity of the liquid contents of the tank and other factors affecting the pressure in the gas or vapor space. (API Standard 620)
RVP = Reid Vapor Pressure is a vapor pressure for liquid products as determined by ASTM test procedure D-323. The Reid vapor pressure is defined as pounds per sq in. at 100°F. The RVP is always less than the true vapor pressure at 100°F.
TVP = true vapor pressure is the pressure at which the gas and liquid in a closed container are in equilibrium at a given temperature.

FIG. 6-2

Storage

	Atmospheric Pressure†‡	0 to *2.5 psig†‡	2.5 to 15 psig‡	Above 15 psig§	Underground
Crude Oils	X	X	X	–	X
Condensate	X	X	X	X	X
Oils	X	X	–	–	X
Natural Gasoline	X	X	X	–	X
Butanes	–	X°	X°	X	X
Propane	–	X°	X°	X	X
Raw NGLs	–	X°	X°	X	X
Ethane	–	X°	X°	X	X
Petrochemicals	–	X°	X°	X	X
Natural Gas	–	–	–	X	X
LNG	–	X°	X°	X	–
Treating Agents	X	X	–	–	–
Dehydration Fluids	X	X	–	–	–
Specialty Chemicals	X	X	X	–	–
Solid Materials	X	–	–	–	–
Water	X	–	–	–	–

* Some materials may require a slight positive pressure to exclude air, oxygen, and/or water, and conserve valuable/toxic vapors.

† API Standard 650 governs

‡ API Standard 620 governs

§ ASME Unfired Pressure Vessel Code, Section VIII governs

° Refrigerated only

Note: Vacuum conditions may exist and must be considered in tank design. Examples: low ambient temperatures or evacuating without relieving.

to supplement the material provided. Manufacturers should be consulted for specific design information pertaining to a particular type of storage.

STORAGE CLASSIFICATION

Above Ground

Atmospheric — Atmospheric pressure tanks are designed and equipped for storage of contents at atmospheric pressure. This category usually employs tanks of vertical cylindrical configuration that range in size from small shop welded to large field erected tanks. Bolted tanks, and occasionally rectangular welded tanks, are also used for atmospheric storage service.

Low Pressure (0 to 2.5 psig) — Low pressure tanks are normally used in applications for storage of intermediates and products that require an internal gas pressure from close to atmospheric up to a gas pressure of 2.5 psig. The shape is generally cylindrical with flat or dished bottoms and sloped or domed roofs. Low pressure storage tanks are usually of welded design. However, bolted tanks are often used for operating pressures near atmospheric. Many refrigerated storage tanks operate at approximately 0.5 psig.

Medium Pressure (2.5 to 15 psig) — Medium pressure tanks are normally used for the storage of higher volatility intermediates and products that cannot be stored in low pressure tanks. The shape may be cylindrical with flat or dished bottoms and sloped or domed roofs. Medium pressure tanks are usually of welded design. Welded spheres may also be used, particularly for pressures at or near 15 psig.

High Pressure (Above 15 psig) — High pressure tanks are generally used for storage of refined products or fractionated components at pressure above 15 psig. Tanks are of welded design and may be of cylindrical or spherical configuration.

Underground

Gas processing industry liquids may be stored in underground, conventionally mined or solution mined caverns. No known standard procedures are available for this type storage; however, there are many publications and books covering the subject in detail.

WORKING PRESSURES

A design working pressure can be determined to prevent breathing, and thereby save standing storage losses. However, this should not be used in lieu of any environmental regulatory requirements regarding the design of storage tanks. The environmental regulatory requirements for the specific location should be consulted prior to the design of storage facilities. Generally there are regulatory requirements specifying the type of storage tank to be used, based on the storage tank capacity and the vapor pressure of the product being stored. In addition there are usually specific design requirements, for example in the type of seals to be used in a floating roof tank.

The working pressure required to prevent breathing losses depends upon the vapor pressure of the product, the temperature variations of the liquid surface and the vapor space, and the setting of the vacuum vent.

$$\phi = B_{max} + (\Delta - B_{min}) \frac{(T_{max} + 460)}{(T_{min} + 460)} - P_a \qquad \textbf{Eq 6-1}$$

The above relation holds only when B_{min} is less than Δ; that is, when the minimum vapor pressure is so low that air is admitted into the vapor space through the vacuum vent. When B_{min} is equal to or greater than Δ, the required storage pressure is,

$$\phi = B_{max} - P_a \qquad \textbf{Eq 6-2}$$

Under this condition air is kept out of the vapor space.

Fig. 6-3 is presented as a general guide to storage pressures for gasolines of various volatilities in uninsulated tanks. These data for plotting the curves were computed from Eqs 6-1 and 6-2 using the following assumptions:

- Minimum liquid surface temperature is 10°F less than the maximum liquid surface temperature.
- Maximum vapor space temperature is 40°F greater than the maximum liquid surface temperature.
- Minimum vapor space temperature is 15°F less than the maximum liquid surface temperature.
- Stable ambient conditions (ambient temp. 100°F).

These temperature variations are far greater than would be experienced from normal night to day changes. Therefore, the lower, nearly horizontal line, which shows a required storage pressure of 2.5 psig for the less volatile gasolines is conservative and allows a wide operating margin.

Maximum liquid surface temperatures vary from 85 to 115°F. Sufficient accuracy will generally result from the assumption that it is 10°F higher than the maximum temperature of the body of the liquid in a tank at that location.

FIG. 6-3

Storage Pressure vs. True Vapor Pressure

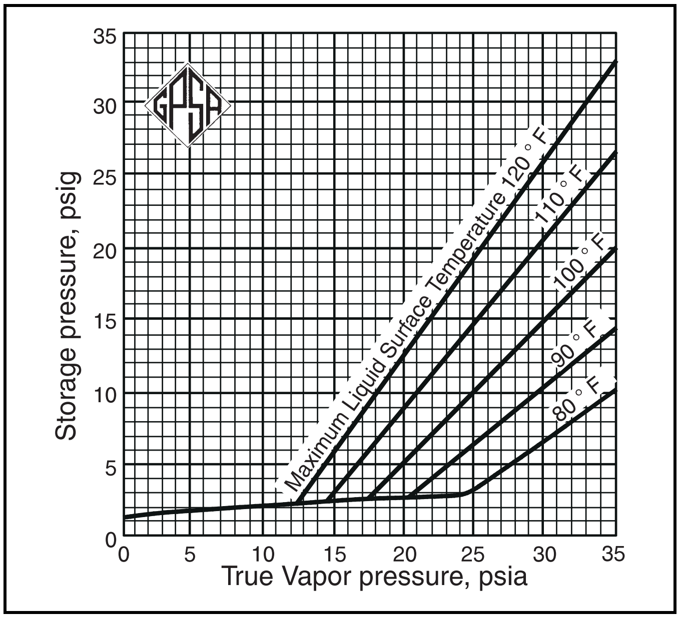

Example 6-1 — To illustrate the use of Fig. 6-3, suppose a 24 psia true vapor pressure (TVP) natural gasoline is to be stored where the liquid surface temperature may reach a maximum of 100°F. A vertical line extended upward from the 24 psia mark at the bottom of the chart intersects the 100°F line at 9.3 psig. The design pressure of the tank should be a minimum of 10.23 psig (9.3 psig + 10%).

Fig. 6-4 can be used as follows:

- As quick reference to determine true vapor pressures of typical LPGs, natural gasolines, and motor fuel components at various temperatures.
- To estimate the operating pressure of a storage tank necessary to maintain the stored fluid in a liquid state at various temperatures.
- For converting from true vapor pressure to Reid Vapor Pressure (RVP).
- For simple evaluation of refrigerated storage versus ambient temperature storage for LPGs.

Example 6-2 — Determine the TVP of a 12 psi RVP gasoline. In addition, estimate the design pressure of a tank needed to store this same 12 RVP gasoline at a maximum temperature of 120°F. Using Fig. 6-4, a vertical line is extended upwards from the 100°F mark (100°F is used as the reference point for determining RVP) at the bottom of the chart to the intersection of the 12 psi RVP line, read true vapor pressure of 13.2 psia. A vertical line is also extended from the 120°F mark to intersect the 12 RVP gasoline line. Now going horizontal, the true vapor pressure axis is crossed at approximately 18.1 psia. The storage tank should therefore be designed to operate at 18.1 psia (3.4 psig) or above. The design pressure of the tank should be a minimum of 10% above the operating gauge pressure or approximately 18.5 psia.

Example 6-3 — Evaluate the options of refrigerated storage versus ambient temperature storage for normal butane. From Fig. 6-4 the vertical line is extended up from the 100°F (assumed maximum) mark to intersect the normal butane line at approximately 51.5 psia (36.8 psig). The working pressure of the tank should be 36.8 psig plus a 10% safety factor, or 55.2 psia. This same product could be stored in an atmospheric pressure tank if the product is chilled to 32°F. This temperature is determined by following the normal butane line down until it intersects the 14.7 psia horizontal vapor pressure line. Reading down to the bottom scale indicates the storage temperature at 32°F. The pressurized tank would require more investment due to the higher working pressure of 55.2 psia (40.5 psig) and the thicker shell requirement. The refrigerated tank would require less investment for the tank itself, but an additional investment would be necessary for insulation and for refrigeration equipment which requires additional operating expenses. The economics of each type of storage system can be evaluated to determine which will be the most attractive.

The graphical method of converting from RVP to TVP is an approximation and is generally more accurate for lighter components. Crude oils with very low RVPs could vary significantly from this graphical approach. This is due to the fact that during the Reid test the highest vapor pressure materials tend to evaporate leaving a residue which has a lower vapor pressure than the original sample. Equation 6-3 was developed by A. Kremser in 1930 to relate the two vapor pressures at 100°F.

$$TVP = (1.07)(RVP) + 0.6 \qquad \textbf{Eq 6-3}$$

Using this formula for the 12 psi RVP gasoline example would calculate a 13.4 psia TVP versus the 13.2 determined

FIG. 6-4

True Vapor Pressures vs. Temperatures for Typical LPG, Motor, and Natural Gasolines

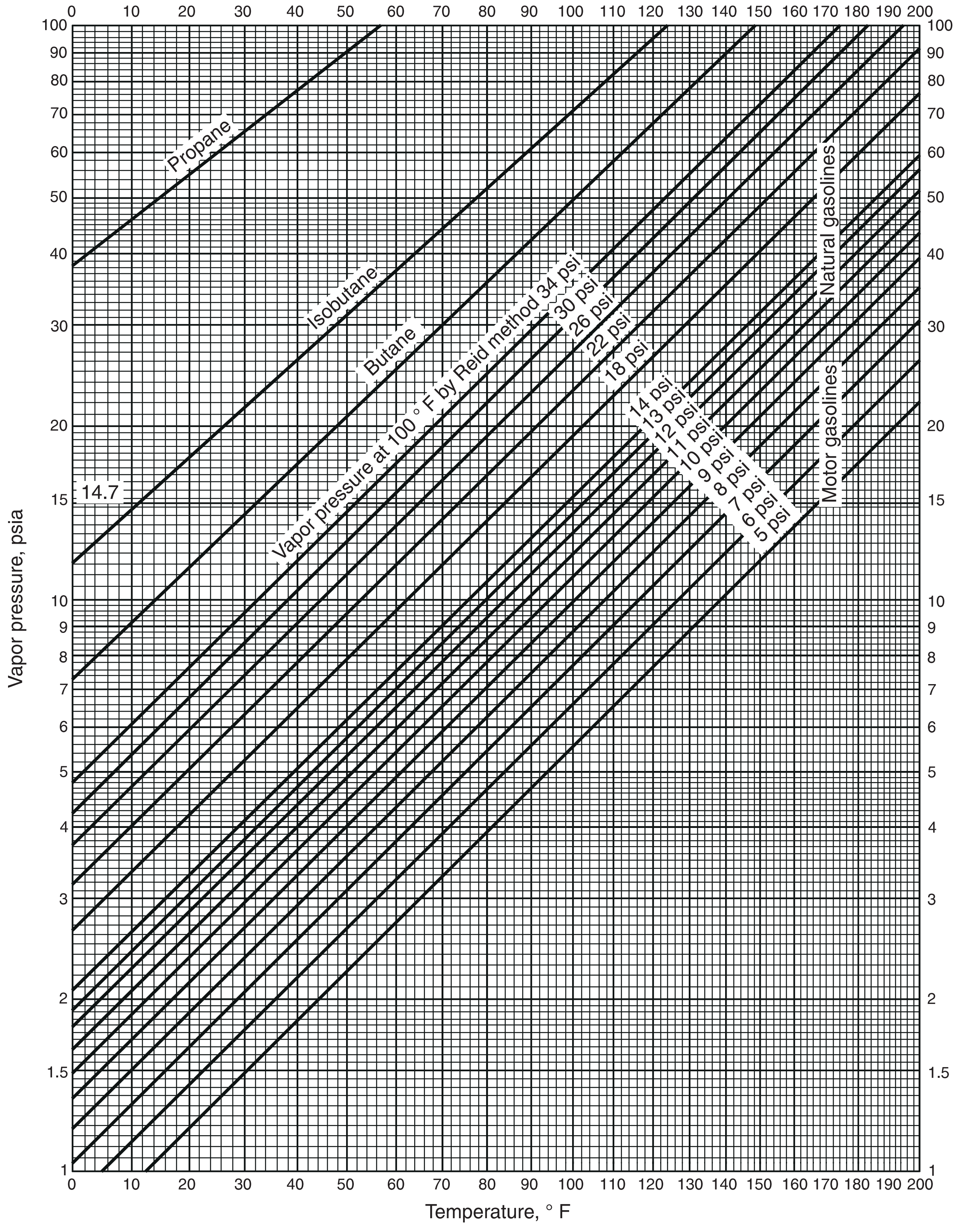

CAUTION: This chart cannot be used to determine crude oil vapor pressure. Refer to API Technical Data Book Fig. 5B1.2

graphically. The RVP is less than the true vapor pressure at 100°F. Published data indicate the ratio of true vapor pressure to Reid vapor pressure may vary significantly, depending on the exact composition of the stored liquids. Ratios from 1.03 to 1.60 have been verified by test data.[1,2] Before entering the final design phase of any storage project, test data should be gathered on the fluid to be stored.

TYPES OF STORAGE

Above Ground

For operating pressures above 15 psig, design and fabrication are governed by the ASME Code, Section VIII.

Spheres — Spherical shaped storage tanks are generally used for storing products at pressures above 5 psig.

Spheroids — A spheroidal tank is essentially spherical in shape except that it is somewhat flattened. Hemispheroidal tanks have cylindrical shells with curved roofs and bottoms. Noded spheroidal tanks are generally used in the larger sizes and have internal ties and supports to keep shell stresses low. These tanks are generally used for storing products above 5 psig.

Horizontal Cylindrical Tanks — The working pressure of these tanks can be from 15 psig to 1000 psig, or greater. These tanks often have hemispherical heads.

Fixed Roof — Fixed roofs are permanently attached to the tank shell. Welded tanks of 500 barrel capacity and larger may be provided with a frangible roof (designed for safety release of the welded deck to shell joint in the event excess internal pressure occurs), in which case the design pressure shall not exceed the equivalent pressure of the dead weight of the roof, including rafters, if external.

Floating Roof — Storage tanks may be furnished with floating roofs (Fig. 6-6) whereby the tank roof floats upon the stored contents. This type of tank is primarily used for storage near atmospheric pressure. Floating roofs are designed to move vertically within the tank shell in order to provide a constant minimum void between the surface of the stored product and the roof. Floating roofs are designed to provide a constant seal between the periphery of the floating roof and the tank shell. They can be fabricated in a type that is exposed to the weather or a type that is under a fixed roof. Internal floating roof tanks with an external fixed roof are used in areas of heavy snowfalls since accumulations of snow or water on the floating roof affect the operating buoyancy. These can be installed in existing tanks as well as new tanks.

Both floating roofs and internal floating roofs are utilized to reduce vapor losses and aid in conservation of stored fluids.

Environmental rules for new equipment restrict cone-roof tanks without vapor-recovery facilities to materials having a true vapor pressure at the tank temperature of less than 1.5 psia and floating-roof tanks to materials of less than 11.1 psia.

Above 11.1 psia, a pressure vessel or vapor recovery scheme is mandatory. These rules should be considered minimum requiremens. Toxic or odoriferous materials will need better emission control than a floating-roof tank can provide. Local conditions sometimes call for such strict hydrocarbon emission limits that the use of floating-roof tanks comes under question. See Fig. 6-5 for common storage vessels.

FIG. 6-5

Seven Common Storage-Vessels For Low- and High-Pressure Services

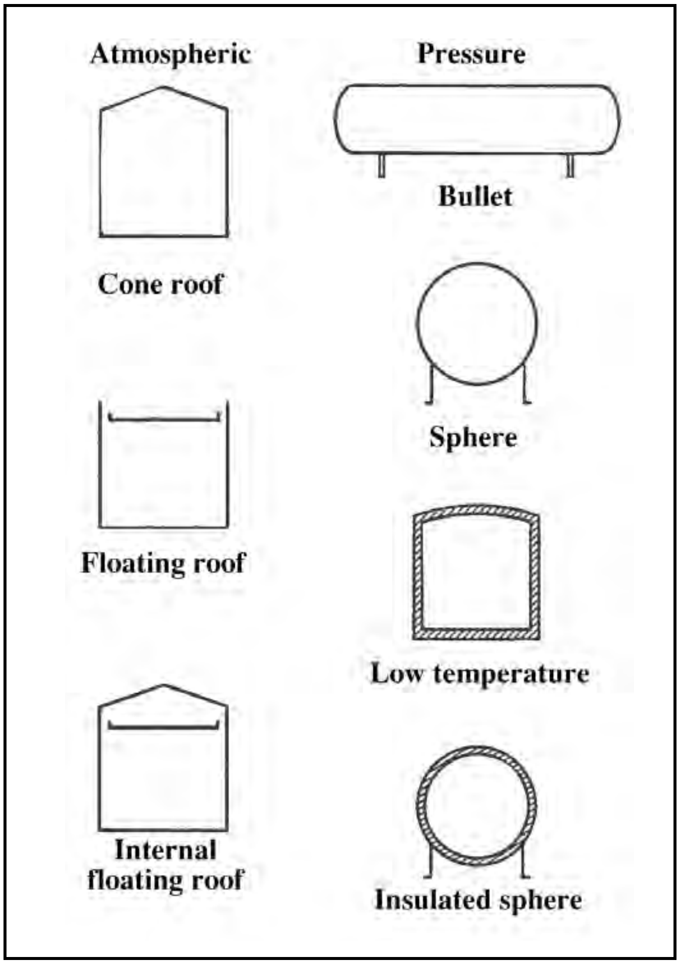

Bolted — Bolted tanks are designed and furnished as segmental elements which are assembled on location to provide complete vertical, cylindrical, above ground, closed and open top steel storage tanks. Standard API bolted tanks are available in nominal capacities of 100 to 10,000 barrels, designed for approximately atmospheric internal pressures. Bolted tanks offer the advantage of being easily transported to desired locations and erected by hand. To meet changing requirements for capacity of storage, bolted tanks can be easily dismantled and re-erected at new locations.

Specialty — Pipe Storage (Fig. 6-7) — Pipe that is used specifically for storing and handling liquid petroleum components or liquid anhydrous ammonia must be designed and constructed in accordance with any applicable codes.

Flat-Sided Tanks — Although cylindrical shaped tanks may be structurally best for tank construction, rectangular tanks occasionally are preferred. When space is limited, such as offshore, requirements favor flat-sided tank construction because several cells of flat-sided tanks can be easily fabricated and arranged in less space than other types of tanks. Flat-sided or rectangular tanks are normally used for atmospheric type storage.[1]

Lined Ponds[2] — Ponds are used for disposal, evaporation, or storage of liquids. Environmental considerations may pre-

FIG. 6-6

Typical Arrangement of Internal Floating Roof Tank

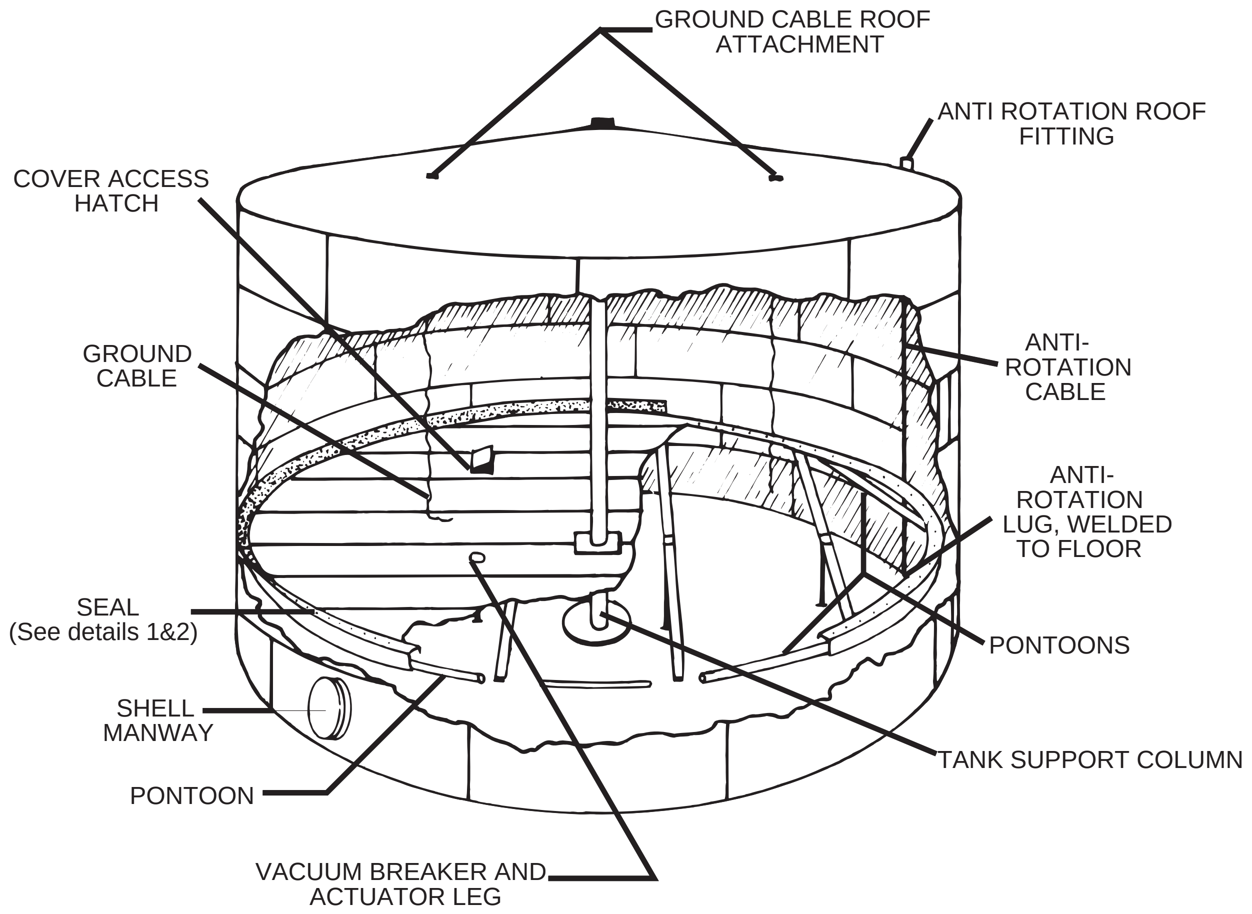

(Also applicable to external floating roof tanks if dome roof is removed)

Courtesy of CE Natco

Example Types of Seals for Floating Roof Tanks

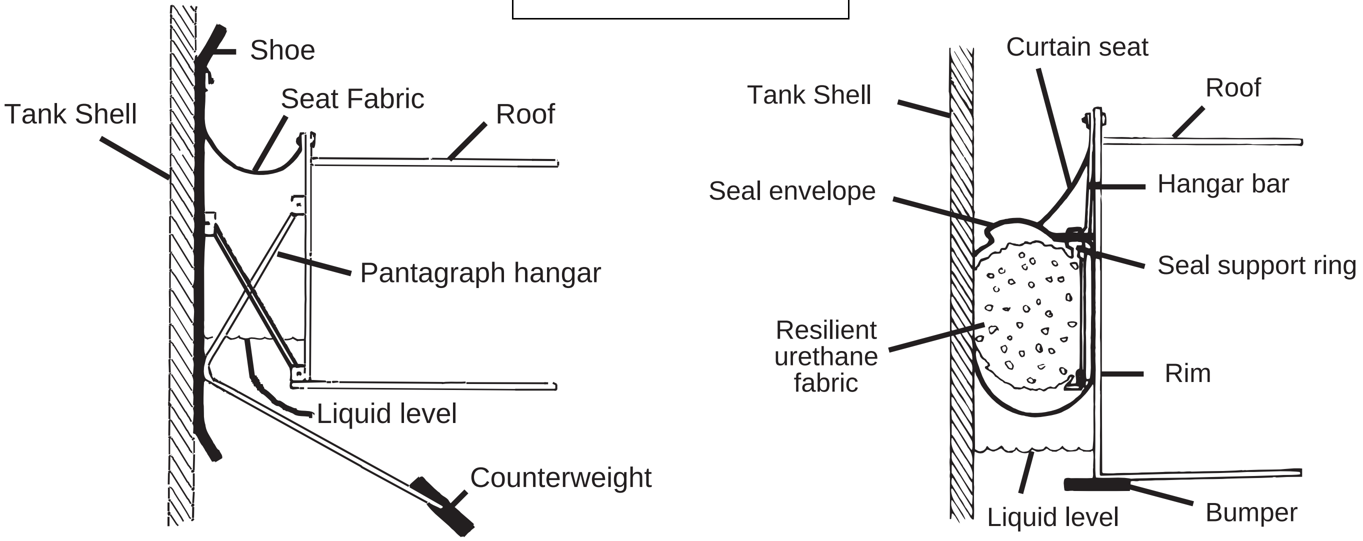

Detail 1 - Shoe seal

Detail 2 - Tube Seal

FIG. 6-7

Pipe Storage

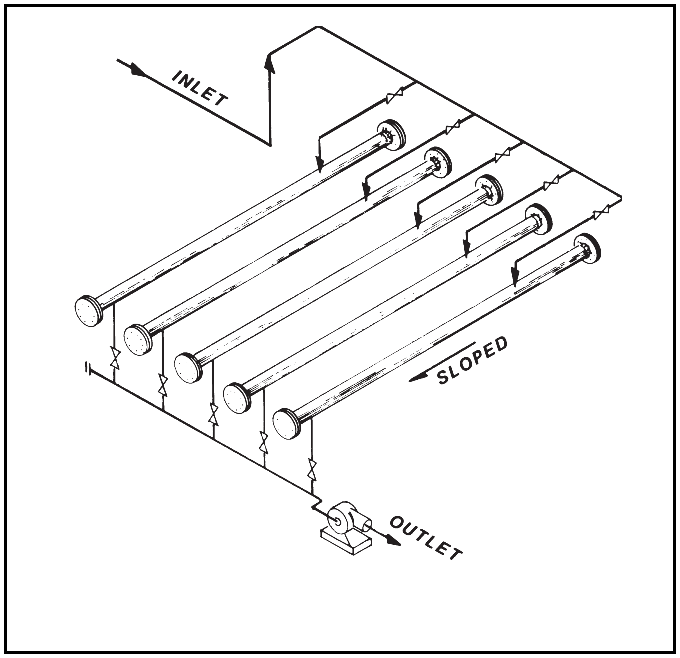

clude the use of lined ponds for the storage of more volatile or toxic fluids. Linings are used to prevent storage liquid losses, seepage into the ground, and possible ground water contamination. Clay, wood, concrete, asphalt, and metal linings have been used for many years. More recently, a class of impervious lining materials has been developed that utilize flexible synthetic membranes. Commonly used lining materials are polyvinyl chloride, natural rubber, butyl rubber, and Hypalon®. Polyethylene, nylons, and neoprenes are used to a lesser extent.

Some of the most important qualities of a suitable liner are:

- High tensile strength and flexibility.
- Good weatherability.
- Immunity to bacterial and fungus attack.
- Specific gravity greater than 1.0.
- Resistance to ultraviolet-light attack.
- Absence of all imperfections and physical defects.
- Easily repaired.

Leak detection sometimes must be built into the pond system, especially where toxic wastes or pollutants are to be stored. Types of leak-detection systems that are commonly used are underbed (French) drainage system, ground resistivity measurement, and monitor wells, and any combination thereof.

Pit Storage — Pit storage is similar to pond storage but is only used on an emergency basis. The use of this type of storage is limited by local, state, and federal regulations.

Underground

Underground storage is most advantageous when large volumes are to be stored. Underground storage is especially advantageous for high vapor pressure products.

Types of underground storage are: (1) caverns constructed in salt by solution mining or conventional mining, (2) caverns constructed in nonporous rock by conventional mining, and (3) caverns developed by conversion of depleted coal, limestone, or salt mines to storage.

Solution Mined Caverns — The cavern is constructed by drilling a well or wells into the salt and circulating low salinity water over the salt interval to dissolve the salt as brine.

The cavern may be operated by brine displacement of product, pumpout methods, vapor displacement, or as in the case of gas, by product expansion (see Figs. 6-8, 6-9, and 6-10).

Most solution mined caverns are operated using the brine displacement technique (Fig. 6-8). A suspended displacement string of casing is installed near the bottom of the cavern and product is injected into the annulus between the product casing (casing cemented at cavern roof) and the displacement casing, forcing brine up the displacement casing. The procedure is reversed for product recovery. In this type of operation, a brine storage reservoir is usually provided. Detail 1 of Fig. 6-8 provides the typical piping for the wellhead of an underground storage well.

Some solution mined caverns are operated "dry" by installing a pump at cavern depth either within the cavern or in a well connected to the cavern. Both submersible electric driven pumps and line shaft pumps (deep well vertical turbine pumps) are used for this purpose (see Fig. 6-9).

Conventional Mined Caverns — Conventional mined caverns can be constructed any place a nonporous rock is available at adequate depth to withstand product pressures. An engineer or geologist experienced in underground storage should evaluate any specific site for the feasibility of constructing underground storage. Most product caverns are constructed in shale, limestone, dolomite, or granite. This type cavern is operated "dry" (product recovered by pumping).

Refrigerated Storage

The decision to use refrigerated storage in lieu of pressurized storage is generally a function of the volume of the liquid to be stored, the fill rate, the physical and thermodynamic properties of the liquid to be stored, and the capital investment and operating expenses of each type of system.

The parameters involved in selecting the optimum refrigerated storage facility are:

- Quantity and quality of product to be stored.
- Fill rate, temperature, and pressure of incoming stream.
- Shipping conditions for the product.
- Composition of the product.
- Cooling media (air, water, etc.) available.
- Availability and cost of utilities.
- Load bearing value of soil.

The proper choice of storage and the proper integration of the storage facility with the refrigeration facilities are important to overall economy in the initial investment and operating costs. Fig. 6-11 provides some general guidelines to use when selecting a storage system for propane.

When using refrigerated storage, the liquid to be stored is normally chilled to its bubble point temperature at atmospheric pressure. Refrigerated storage tanks normally operate at an internal pressure between 0.5 and 2.0 psig.

In some cases, pressurized-refrigerated storage is attractive. In this type of refrigerated storage, the product to be stored is chilled to a temperature that allows it to be stored at

FIG. 6-8

Brine Displacement Cavern Operation (Solution Mined Cavern)

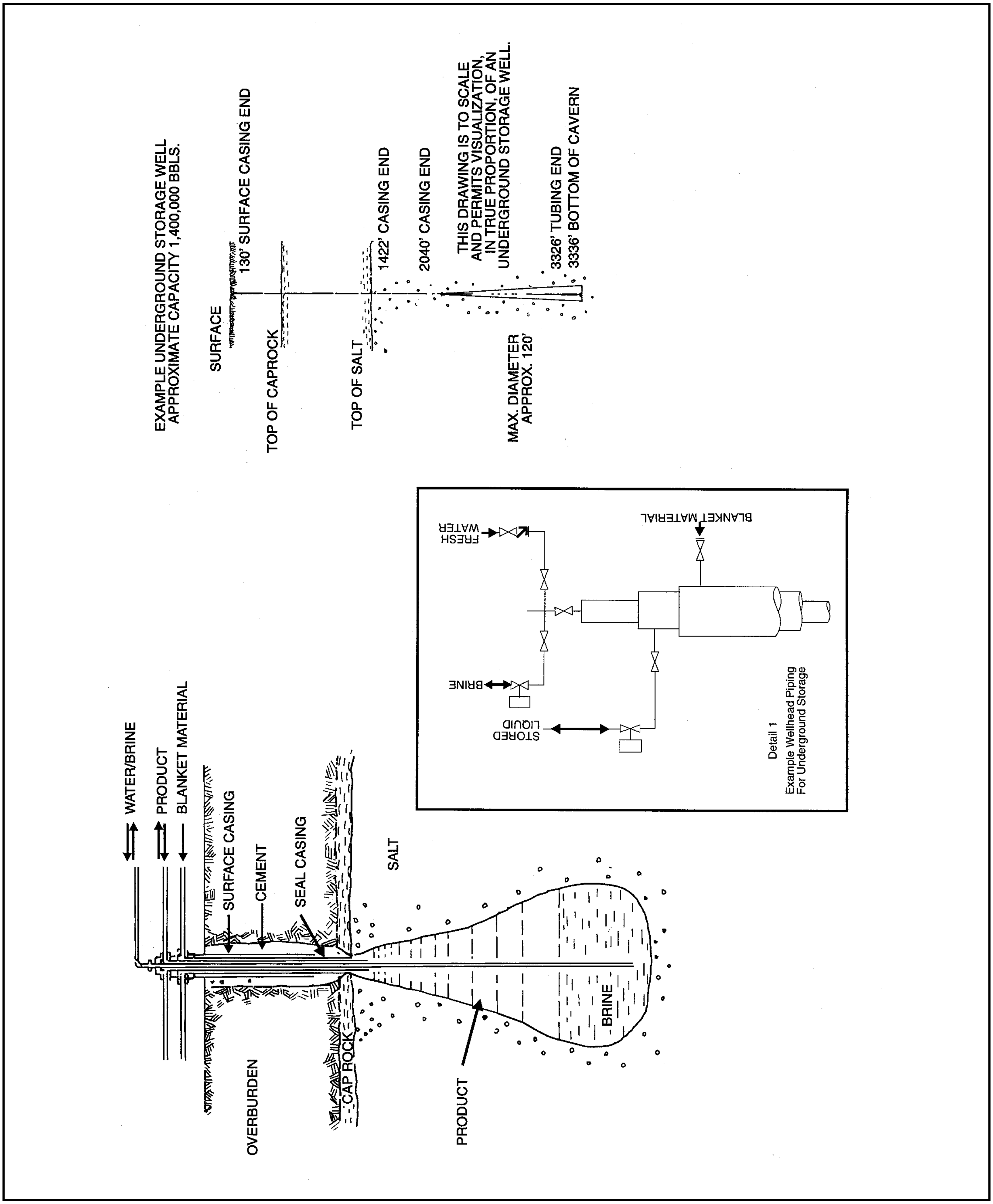

EXAMPLE UNDERGROUND STORAGE WELL
APPROXIMATE CAPACITY 1,400,000 BBLS.

THIS DRAWING IS TO SCALE AND PERMITS VISUALIZATION, IN TRUE PROPORTION, OF AN UNDERGROUND STORAGE WELL.

Detail 1
Example Wellhead Piping
For Underground Storage

FIG. 6-9

Pump-Out Cavern Operation (Fracture Connected Solution Mined Cavern in Bedded Salt)

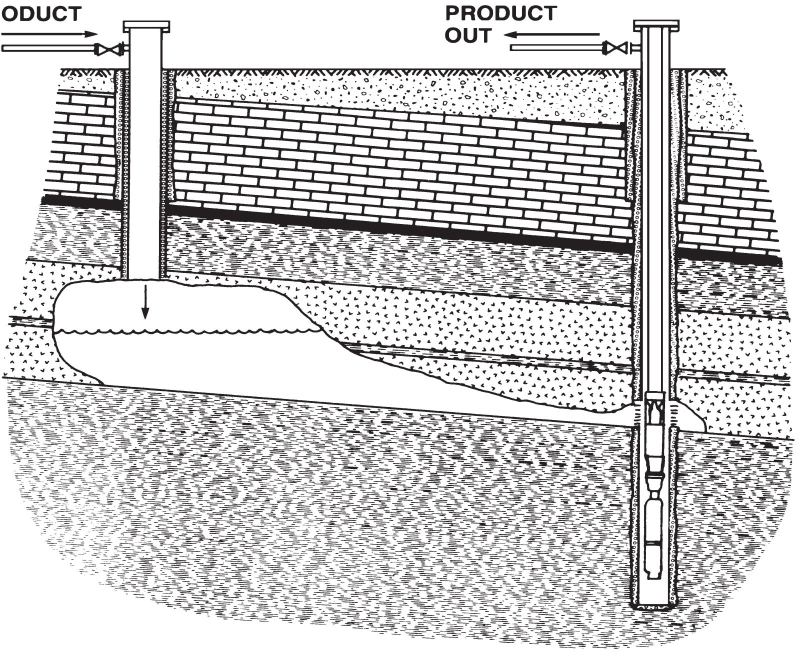

FIG. 6-10

Compression/Expansion Cavern Operation (Solution Mined Cavern)

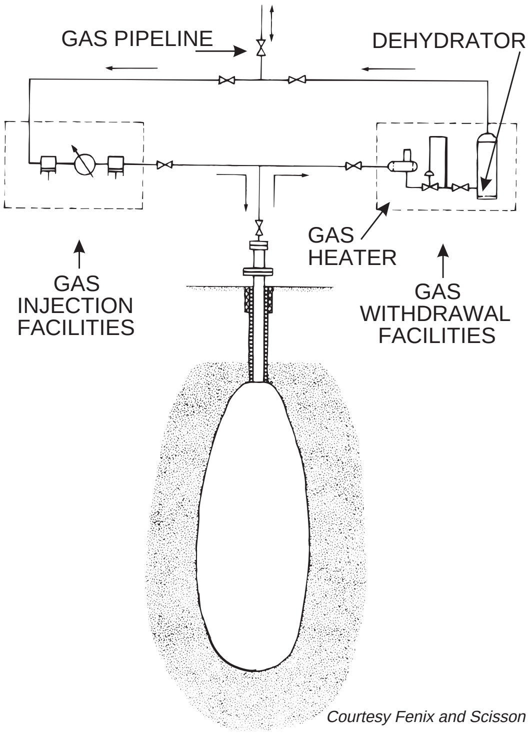

Courtesy Fenix and Scisson

a pressure somewhere between atmospheric pressure and its vapor pressure at ambient temperature.

Refrigeration requirements normally include the following basic functions:

- Cooling the fill stream to storage temperature.
- Reliquefying product vaporized by heat leak into the system.
- Liquefying vapors displaced by the incoming liquid.

Other factors which should be considered are:

- Pump energy requirements
- Barometric pressure variations
- Product compositions
- Non-condensables
- Solar radiation effects
- Superheated products

Refer to Section 14 of this Data Book for information on refrigeration. Tables R.2.2, R.2.3, and R.2.4 of API 620, Appendix R, should be consulted for specific service temperatures and impact requirements of materials used as primary and secondary components in refrigerated storage tanks. Refrigerated facilities require specialized insulation systems, which are described later in this Section.

Foundations for the various types of low temperature storage vessels are designed much the same as foundations for ordinary spheres and pressure cylinders. One caution must be noted. Most low temperature liquids are lighter than water and the vessels are designed to store this lighter liquid. Therefore, it is a common practice to design foundations for the total weight of contained product and to water test the vessel at 1.25 times the product weight.

FIG. 6-11

General Guidelines for the Economic Storage of Pure Pro-

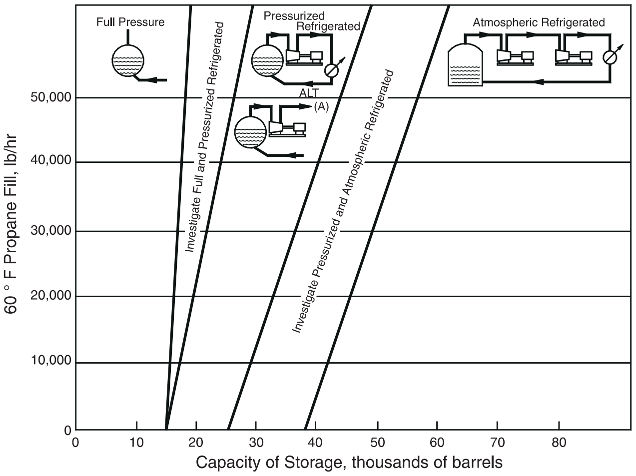

(A) To Fuel line or other gas consumer.

Courtesy of Chicago Bridge & Iron

Flat bottom vessel foundations in low temperature service present an additional problem. The container is a heat-sink and, if no provision is made to supply heat, a large quantity of soil eventually will reach temperatures below the freezing point of water. Moisture in the sub-soil will freeze and some "heaving" could occur. A heat source consisting of electrical resistance heating cable or pipe coils with a warm circulating liquid is generally installed below the outer tank bottom to maintain the soil temperature above 32°F. Foundations for low temperature vessels must also be designed to minimize differential settling.

Liquids at low temperatures can be stored in frozen earth caverns at essentially atmospheric or very low pressures. An excavated hole (usually lined) is capped by an insulated metal dome and refrigerated to maintain impervious "walls of ice." Vapors from the liquid are continuously recompressed and condensed.

DEFINITIONS

The following definitions of tank containment are from BS7777. Extracts from BS 7777 Part 1: 1993 reproduced with permission from BSI under license number 2002NC0111. BSI publications can be obtained from BSI Customer Services, 389 Chiswick High Road, London W4 4AL (Tel +44 (0) 20 8996 9001).

Single Containment Tank

Either a single tank or a tank comprising an inner tank and an outer container designed and constructed so that only the inner tank is required to meet the low temperature ductility requirements for storage of the product.

The outer container (if any) of a single containment storage tank is primarily for the retention and protection of insulation and to constrain the vapor purge gas pressure, but is not designed to contain refrigerated liquid in the event of leakage from the inner tank.

A single containment tank is normally surrounded by a low bund wall (Fig. 6-12) to contain any leakage.

Double Containment Tank

A double tank designed and constructed so that both the inner tank and the outer tank are capable of independently containing the refrigerated liquid stored. To minimize the pool of escaping liquid, the outer tank or wall is located at a distance not exceeding 6 m from the inner tank.

The inner tank contains the refrigerated liquid under normal operating conditions. The outer tank or wall is intended to contain the refrigerated liquid product leakage from the

FIG. 6-12

Single Containment Tank

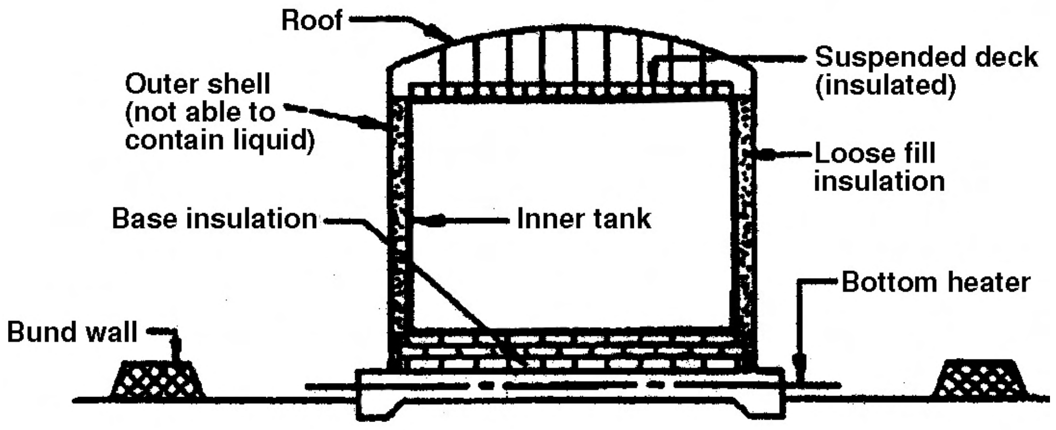

Extracts from BS 7777 Part 1: 1993 reproduced with permission from BSI under license number 2002NC0111. BSI publications can be obtained from BSI Customer Services, 389 Chiswick High Road, London W4 4AL (Tel +44 (0) 20 8996 9001).

FIG. 6-13

Double Containment Tank

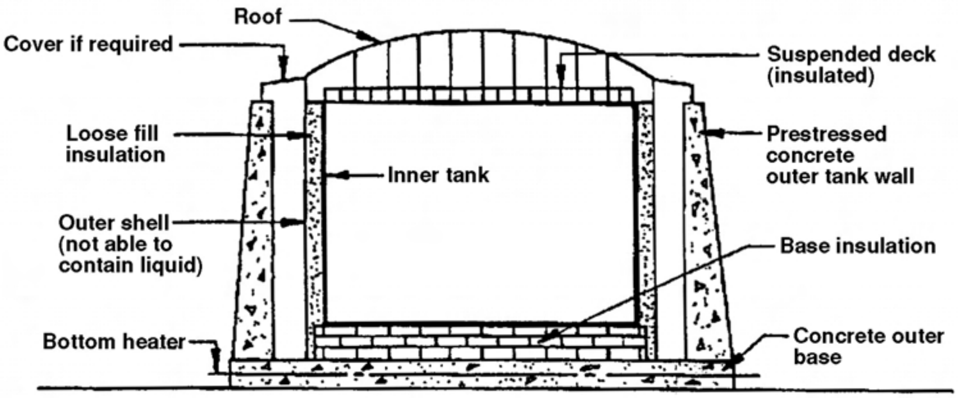

Extracts from BS 7777 Part 1: 1993 reproduced with permission from BSI under license number 2002NC0111. BSI publications can be obtained from BSI Customer Services, 389 Chiswick High Road, London W4 4AL (Tel +44 (0) 20 8996 9001).

inner tank, but it is not intended to contain any vapor resulting from product leakage from the inner tank (Fig. 6-13).

Full Containment Tank

A double tank designed and constructed so that both the inner tank and the outer tank are capable of independently containing the refrigerated liquid stored. The outer tank or wall should be 3 feet to 6 feet distant from the inner tank.

The inner tank contains the refrigerated liquid under normal operating conditions. The outer roof is supported by the outer tank. The outer tank is intended to be capable both of containing the refrigerated liquid and of controlled venting of the vapor resulting from product leakage after a credible event (Fig. 6-14).

MATERIALS OF CONSTRUCTION

Vessel/Tank Materials

Metallic — Shop welded, field welded, and bolted storage tanks are customarily fabricated from mild quality carbon steel. Most common for welded tanks are A-36 structural steel and A-283 grade "C" structural quality carbon steel. Sheet gauge steels for bolted tanks are of commercial quality having a minimum tensile strength of 52,000 psi. A-612, A-515, and A-516 mild quality low carbon steels are used for fabricating the higher pressure storage products such as spheres and "bullets." Various API and ASME Codes (listed in the References) to which the storage tank is fabricated, set forth the welding

FIG. 6-14

Full Containment Tank

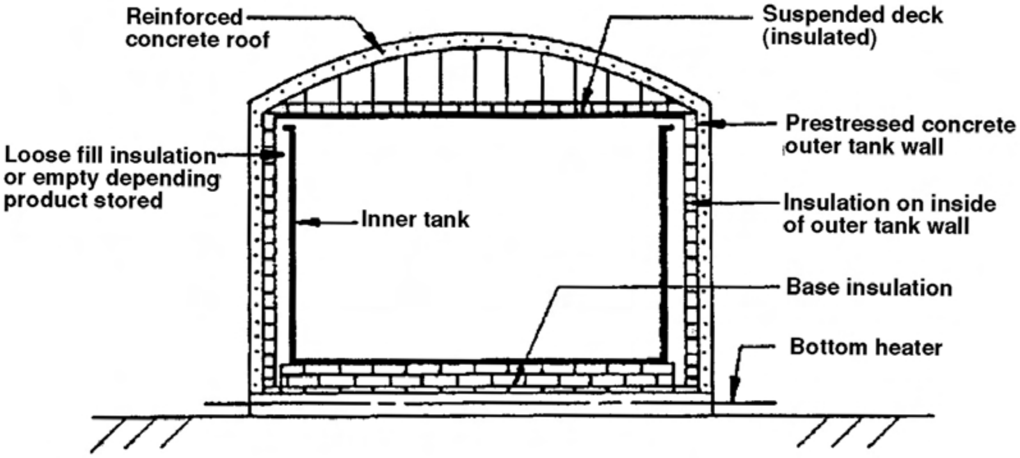

Extracts from BS 7777 Part 1: 1993 reproduced with permission from BSI under license number 2002NC0111. BSI publications can be obtained from BSI Customer Services, 389 Chiswick High Road, London W4 4AL (Tel +44 (0) 20 8996 9001).

procedures, inspection procedures, testing requirements, and material selection. Some storage applications or service conditions (low temperature storage) require storage tanks to be fabricated from metals such as low alloy stainless steel, aluminum, or other specialty materials.

Non-Metallic — Older non-metallic tanks were customarily constructed from wood. Plastic materials have now replaced wood. These materials have the advantage of being non-corroding, durable, low cost, and lightweight. Plastic materials used in the construction are polyvinyl chloride, polyethylene, polypropylene, and fiberglass-reinforced polyesters. The fiberglass-reinforced polyester (FRP) tanks are available in the larger sizes and are the most common. FRP tanks are suitable for outdoor as well as indoor applications. FRP tanks with special reinforced shells are designed for underground storage service. Above ground tanks are primarily vertical, with or without top heads.

Non-metallic tanks constructed of unreinforced plastics such as polyvinyl chloride or polyethylene materials are available in sizes up to about 6 ft in diameter by 11 ft high (2400 gallons). Horizontal underground FRP tanks will hold up to 12,000 gallons. Above ground vertical FRP tanks can store from 12,000 to 24,000 gallons, depending upon the shell construction.

The temperature limits of plastic tanks are 40°F to 150°F. Color must be added to the outer liner for protection against ultraviolet radiation. The inner liner must be selected for compatibility with the chemical or product stored. Protection from mechanical abuse such as impact loads is a necessity. Good planning dictates that plastic storage should not be located next to flammable storage tanks. All closed plastic tanks should be equipped with pressure relief devices.

Protective Coatings

Internal — Use of internal coatings is primarily to protect the inside surface of the tank against corrosion while also protecting the stored contents from contamination.

Consideration must always be given to such factors as the type of product being stored, type of coating available, type of surface to be coated, surface preparation, compatibility of coatings, and number of coats required to obtain maximum protection.

Many types of internal coatings are available. Due to the unlimited types and applications, only a few will be described as follows:

Coal Tar — Among the oldest and most reliable coatings. Extremely low permeability; protects surface by the mechanical exclusion of moisture and air; extremely water resistant; good resistance to weak mineral acids, alkalis, salts, brine solutions, and other aggressive chemicals.

Epoxy Resin Coatings — Excellent adhesion, toughness, abrasion resistance, flexibility, durability, and good chemical and moisture resistance. Typical applications include linings for sour crude tanks, floating roof tanks, solvent storage tanks, drilling mud tanks, sour water, treated water, and pipelines.

Rubber Lining — Used as internal lining for storage tanks which are subjected to severe service such as elevated temperatures or for protection from extremely corrosive contents, such as concentrated chlorides and various acids such as chromic, sulfuric, hydrochloric, and phosphoric.

Galvanized — Galvanizing (zinc coating) is highly resistant to most types of corrosion. Bolted steel tanks are ideally suited for galvanizing since all component parts are galvanized by the hot-dip process after fabrication but before erection. Galvanized bolted tanks are recommended where the oil produced contains sulfur compounds and/or is associated with hydrogen sulfide gas. Galvanizing is also effective against corrosion in seacoast areas where atmospheric salt conditions accelerate corrosion problems.

External — The basic requirements for external coatings are appearance and weather protection.

Numerous types of external coatings are available, ranging from basic one-coat primers to primers with one or more topcoats. Environmental conditions usually dictate the extent of coating applied. Offshore and coastal installations require more extensive coatings as compared to inland locations.

Insulation

Types — The four basic types of thermal insulating material are: fibrous, cellular, granular, and reflective. These materials differ in many characteristics. Refer to Fig. 6-15 for a description of these materials and typical conductivity values and principal properties of common industrial insulations.

Uses — Principal uses of insulation are for personnel protection, process temperature control, prevention of condensation, and conservation of energy.

Personnel Protection — Personnel protection is accomplished by the application of insulation of proper thickness where the surface temperature should be limited to approximately 150°F or as specified by applicable codes or company standards.

Process Temperature Control — Insulation thickness is specified in this case to help control the temperature of the process fluid. Electrical, steam, hot process fluid, hot oil, glycol-water tracing is used to add heat to the process line to balance the heat loss. The insulation thickness must be matched to the energy input to achieve the desired result. Freeze protection is another use for insulation. This includes fluids which have higher viscosities or freeze points.

Condensation — Insulation thickness must be sufficient to keep the outside surface of the insulation above the dew point of the surrounding air. Moisture condensation on a cool surface in contact with warmer humid air must be prevented because of the deterioration of the insulation. In addition to the required thickness of insulation, a vapor tight membrane must be properly applied to the insulation. As a rule, insulation thickness for condensation control is much greater than the thickness required for conservation of energy.

Conservation of Energy — High fuel costs increase the need for more insulation. A rule of thumb for estimating the thickness of insulation is to apply the thickness that produces a heat loss of 3 to 5 percent or less from the surface. Specific insulating materials and thicknesses for any large application should be determined with the assistance of the manufacturer. Fig. 6-15 contains 3 graphs which permit the rapid estimation of the thickness of thermal insulation required to give a desired heat flow or surface temperature when the hot face and ambient temperature are known. The method is based on elementary heat transfer theory and reliable experimental data. The following examples illustrate the use of these graphs.

Example 6-4 — A rectangular duct is operating at 450°F. The duct is finished with a silicone coated fabric. The ambient tem-

FIG. 6-15

Constants for Determining Thermal Conductivity and Unit Heat-Transfer Rate for Some Common Insulating Materials

$$k = A' + B'T + C'T^2 + D'T^3 \quad \text{where } T = {}^\circ F$$

Insulation	A′	B′	C′	D′	Temperature range, °F
Calcium silicate ASTM C533-80 Class 1	0.3504	5.196×10^{-4}			100-700
White fiberglass blankets with binder					
density = 3.0 lb/ft^3	0.2037	6.161×10^{-6}	1.403×10^{-6}	-5.0×10^{-10}	50-800
density = 6.0 lb/ft^3	0.2125	-2.325×10^{-4}	1.797×10^{-6}	-7.97×10^{-10}	50-900
Rigid fiberglass sheet					
ASTM C-547-77 Class 1	0.2391	9.192×10^{-4}	6.942×10^{-10}		11-121
ASTM C-547-77 Class 2	0.2782	1.226×10^{-3}			37-204
ASTM C-612-77 Class 1	0.2537	3.051×10^{-4}	1.950×10^{-6}		0-250
ASTM C-612-77 Class 3	0.2631	2.301×10^{-4}	1.614×10^{-6}		0-275
density = 4.0 lb/ft^3	0.2113	3.857×10^{-4}	1.20×10^{-6}		0-300
density = 6.0 lb/ft^3	0.1997	2.557×10^{-4}	9.048×10^{-7}		0-300
Cellular glass foam					
ASTM C-552-79 Class 1	0.3488	5.038×10^{-4}	1.144×10^{-7}	7.172×10^{-10}	–300-500
Mineral wool					
Basaltic rock blanket, 9 lb/ft^3	0.2109	3.382×10^{-4}	5.495×10^{-7}		0-800
Basaltic rock blanket, 12 lb/ft^3	0.2798	9.508×10^{-5}	6.478×10^{-7}		0-800
Metallic slag block, 6 lb/ft^3	0.1076	5.714×10^{-4}	3.124×10^{-7}		0-600
Metallic slag block, 18 lb/ft^3	0.3190	8.870×10^{-5}	2.174×10^{-7}		0-1200
Mineral-wool-based-cement	0.4245	6.293×10^{-4}	-1.638×10^{-7}	3.533×10^{-10}	0-950
Preformed expanded perlite					
ASTM C-610-74	0.3843	3.0×10^{-4}	2.2381×10^{-7}		50-750
Expanded perlite-based cement	0.6912	5.435×10^{-4}			50-650
Expanded polystyrene block					
ASTM C-578-69 GR2	0.1711	2.760×10^{-4}	1.796×10^{-6}	-3.997×10^{-9}	–58-110
Polyurethane, 2.2 lb/ft^3					
aged 720 days at 77°F and 50% relative humidity	0.1662	-4.094×10^{-4}	-5.273×10^{-6}	2.534×10^{-8}	–58-32
(85% closed cell)	0.1516	-3.370×10^{-4}	7.153×10^{-6}	-2.858×10^{-8}	32-122
new polyurethane	0.1271	-2.490×10^{-4}	-7.962×10^{-7}	4.717×10^{-8}	–58-32
(95% closed cell)	9.72×10^{-2}	7.813×10^{-4}	-7.152×10^{-6}	2.858×10^{-8}	32-122
Exfoliated vermiculite (insulating cement)					
Aislagreen*	0.480	6.0×10^{-4}			0-1200
ASTM C-196-77	0.8474	5.071×10^{-4}			0-1200

*Trademark of Cia. Mexicana de Refractarios A.P. Green S.A. (Mexico City)

perature is 80°F. It is desired to maintain a surface temperature of 130°F. What thickness of cellular glass foam is required? What is the heat loss?

Solution Steps using Fig. 6-16

$T_h = 450 \qquad \Delta T_i = 450 - 130 = 320$
$T_s = 130 \qquad \Delta T_f = 130 - 80 = 50$
$T_a = 80 \qquad T_m = (450 + 130)/2 = 290$

In Fig. 6-16 at ΔT_f of 50, project vertically to curve A, then horizontally to the left to a heat loss (Q) of 98 Btu/(hr • sq ft).

Project horizontally to the right along the 98 Btu/hr • sq ft Q line to the point in Fig. 6-16b corresponding to a temperature drop through the insulation (ΔT_i) of 320, then vertically downward to an insulation resistance (R_i) of 3.3.

From Fig. 6-15, ASTM C-552-79 Class 1 cellular glass foam has a k at $T_m = 290$°F:

$$k = 0.3488 + (5.038)(10^{-4})(290) + (1.144)(10^{-7})(290)^2$$

$$+ (7.172)(10^{-10})(290)^3$$

$$k = 0.52$$

Multiply required insulation resistance R_i by k to obtain required thickness (X).

$$X = (3.3)(0.52) = 1.7 \text{ inches}$$

Example 6-5 — In Example 6-4, if the heat loss [98 Btu/ (hr • sq ft)] is specified instead of a surface temperature of 130°F, the following procedure is used.

Project a line horizontally on Fig. 6-16a from a heat loss of 98 Btu/(hr • sq ft) to curve A, then vertically downward to a ΔT_f of 50. Surface temperature = 80 + 50 = 130°F. The rest of the solution remains the same.

Example 6-6 — Assume the same conditions as Example 6-4 except that the surface to be insulated is a 4" O.D. duct.

After determining the required thickness of 1.7 inches for a flat surface, go to Fig. 6-16c. Project horizontally from 1.7" for a flat surface to the line representing a 4" O.D. duct then vertically to an actual thickness of 1.35". The heat loss of 98 Btu/hr • sq ft of outside insulation surface remains the same.*

The heat loss per linear foot of outside duct surface (including insulation) is:

$$\frac{\pi \, OD}{12}(Q) = \left(\frac{6.7 \bullet \pi}{12}\right) 98 = 171 \text{ Btu/hr / linear ft}$$

*The insulation surface temperature on tubing and ducts in the horizontal position is generally higher than in the vertical position for the same heat flow. To correct for the horizontal

FIG. 6-16

Heat Flow Through Insulation

6-16a

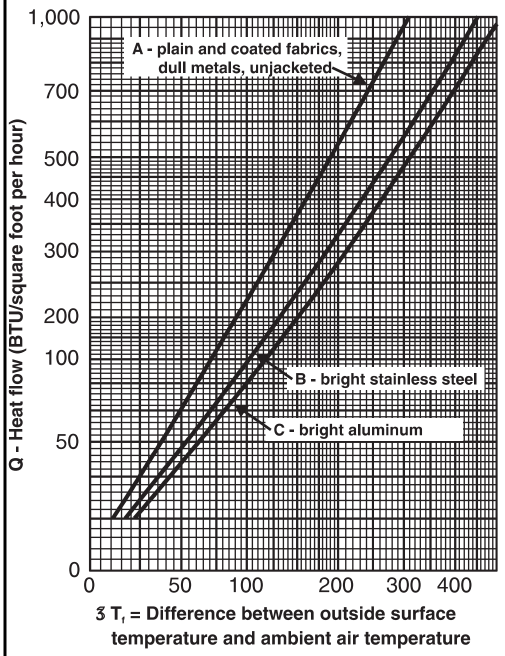

6-16b

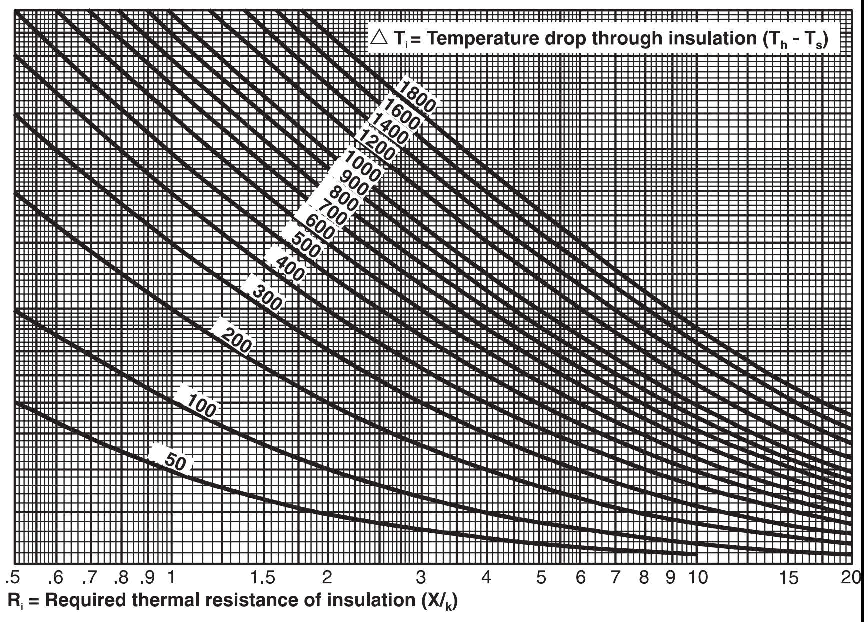

How to Use Figs. 6-16 a & b

6-16c

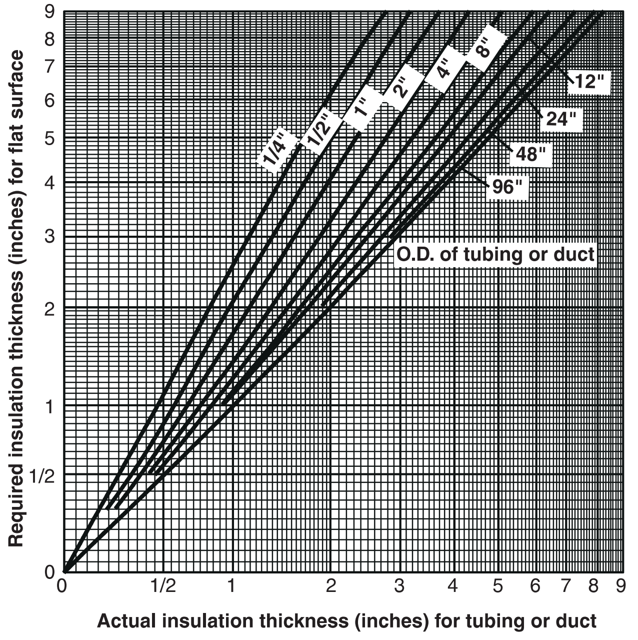

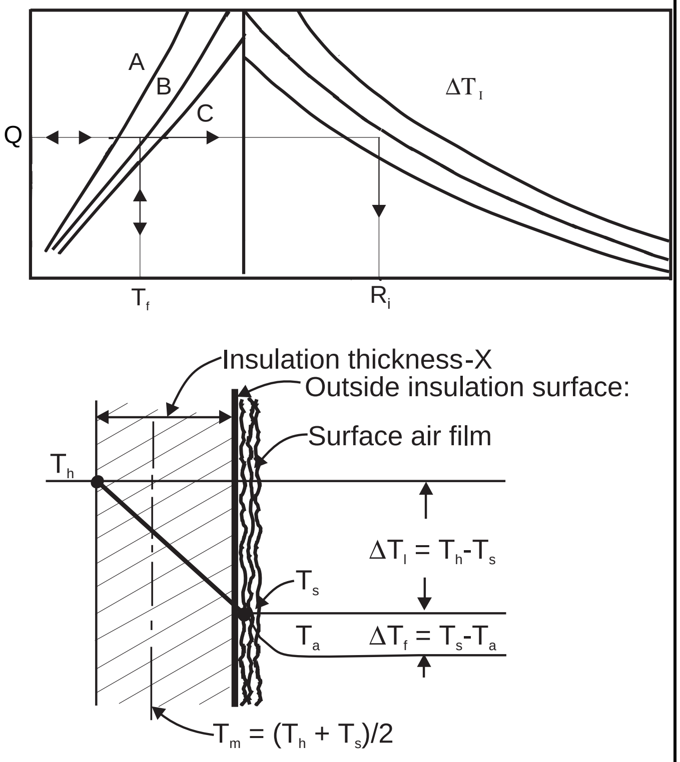

Courtesy John Mansville

position, multiply the ΔT_f for flat surfaces obtained from Fig. 6-15a by the following factors (H):

Q (Btu/hr • sq ft)	10-99	100-199	200-299	300 and up
H	1.35	1.2	1.10	15.0

Example 6-7 — A furnace is operating at 1100°F. The outside surface is stainless steel. The ambient temperature is 75°F. It is desired to limit the heat loss to 150 Btu/hr • sq ft.

What thickness of mineral wool and cellular glass foam is required? What is the surface temperature?

Solution Steps $T_h = 1100$ $T_a = 75$
$Q = 150$ Btu/hr • sq ft

From Fig. 6-16a at Q of 150 Btu/hr • sq ft, project horizontally to curve B, then vertically to $\Delta T_f = 105$. T_s is $(105 + 75) = 180$. In this case a combination of mineral wool (metallic slag block, 18 lb/ft^3) on the hot face backed by cellular glass foam (ASTM C 552-79 Class 1) is to be used. From Fig. 6-15, the temperature limit of cellular glass foam is 500°F. The inner face temperature between the two materials should be close to, but not above, this limit.

ΔT_i (mineral wool) $(1100 - 500) = 600$

T_m (mineral wool) $(1100 + 500)/2 = 800$

k (from Fig. 6-15) of mineral wool at 800°F (T_m) = 0.53

ΔT_i(cellular glass foam) $(500 - 180) = 320$

T_m(cellular glass foam) $(500 + 180)/2 = 340$

k (from Fig. 6-15) of cellular glass foam at 340°F (T_m)=0.56

Using Fig. 6-16b, project horizontally along the 150 Q line to a ΔT_i (mineral wool) of 600°F, then vertically to an insulation resistance of 4.0. Thickness of mineral wool required (4.0 x .53) = 2.12 or 2.5 inches.

Similarly, project horizontally along the 150 Q line to a ΔT_i (cellular glass foam) of 320°F then vertically to an insulation resistance of 2.2. Thickness of cellular glass foam (2.2)(0.56) = 1.23 or 1.5 inches.

In the case of multiple layer construction Fig. 6-16c should not be used to convert to a circular cross section.

Refrigerated Tank Insulation Systems — Low temperature insulation is required for both spherical and flat bottomed cylindrical refrigerated tanks. Two types of insulation systems are commonly used for low temperature service — single wall and double wall.

In the single wall system, the vessel wall is designed to withstand the design service conditions of the liquid to be stored. The outer surface of this wall is then covered with a suitable insulating material such as rigid polyurethane foam. An aluminum jacket is then installed to provide protection against the elements and physical damage. It is extremely important that the insulation be sealed with a good vapor barrier to minimize air leakage and thereby reduce the quantity of water that may migrate into the insulation. Such moisture migration can ultimately damage the insulation.

The welded steel plate outer shell of a double wall system provides containment and vapor protection for the insulation material, generally perlite. The outer wall also provides protection against fires at temperatures up to 600°F. Double wall tanks are considered in storing products at temperatures below –28°F. This system minimizes heat leak which generally means lower operating and maintenance costs. As an added safety feature, the outer wall is completely sealed and therefore permits the insulation space to be continually purged with an appropriate inert gas, which keeps the insulation isolated from outside humid air. Figs. 6-15 and 6-17 provide a range of typical thermal conductivities for various types of insulating and tank shell materials.

APPURTENANCES

Storage tanks can be provided with any number of appurtenances, depending on the appropriate design codes and the requirements of the user. A tank may be fitted with mixers, heaters, relief/vacuum breaking devices, platforms and ladders, gauging devices, manways, and a variety of other connections which include manways, sumps, inlet and outlet nozzles, temperature gauges, pressure gauges, vents, and blowdowns.

SITE PREPARATION AND INSTALLATION

Dikes

Dikes are often required to contain the volume of a certain portion of the tanks enclosed depending on the tank contents. Dikes are used to protect surrounding property from tank spills or fires. In general, the net volume of the enclosed diked area should be the volume of the largest tank enclosed (single failure concept). The dike walls may be earth, steel, concrete, or solid masonry that are designed to be water tight with a full hydrostatic head behind it. Local codes and specifications may govern construction. If more than one tank is within the diked area, curbs or preferably drainage channels should be provided to subdivide the area in order to protect the adjacent tanks from possible spills.

Many codes, standards, and specifications regulate the location, design, and installation of storage tanks depending on their end use. Selecting the proper specification and providing adequate fire protection for the installation may allow lower insurance rates over the life of the installation. A partial list of applicable codes, standards, and specifications can be found at the end of this section.

Grounding

Metallic storage tanks used to store flammable liquids should be grounded to minimize the possibilities of an explosion or fire due to lightning or static electricity.

CATHODIC PROTECTION

Cathodic protection can be applied to control corrosion that is electrochemical in nature where direct current is discharged from the surface area of a metal (the anodic area) through an electrolyte. Cathodic protection reduces corrosion of a metal surface by using a direct current from an external source to oppose the discharge of metal immersed in a conducting medium or electrolyte such as soil, water, etc.

PRODUCT RECOVERY

Vapor Losses

Vapors emitted from the vents and/or relief valves of a storage tank are generated in two ways:

- Vapors that are forced out of the tank during filling operations.

FIG. 6-17

Summary of Specifications for Low-Temperature and Cryogenic Steels(1) (2)

ASTM/AISI Spec & Grade	Lowest Usual Service Temp.(5)	Thermal Conductivity, Btu/[(hr . sq ft . °F)/in] at noted mean temperature, °F					Example Applications	
		+200	+68	-50	-150	-320	Uses	Liquids Stored
Carbon Steels								
A333 Grades 1 & 6	–50	354	349				Welded pressure vessels and storage tanks, when weight and strength are not critical. Refrigeration and transport equipment.	Butane, Isobutane, Sulfur Dioxide, Refrigerant 12, Ammonia, Refrigerant 22, Propane, Propylene
A334 Grades 1 & 6	–50	354	349					
A442 Grades 55 & 60	–50	354	349					
A516 Grades 55, 60, 65, & 70(3)	–50	354	349					
A537(4)	–50	354	349					
Alloy Steels								
A517 Grade F	–50		260				Highly stressed pressure vessels. Tank trucks for handling LP gases.	LP Gases
A203 Grades A&B - 2¼% Ni	–75	288	267	248	234	146	Tanks, vessels, and piping for liquid propane.	Propane
A333 Grade 7 - 2¼% Ni	–75	288	267	248	234	146		
A334 Grade 7 - 2¼% Ni	–75	288	267	248	234	146		
Alloy Steels								
A203 Grades D&E - 3½% Ni	–150	270	253	226	214	122	Land-based storage of liquid propane, carbon dioxide, acetylene, ethane and ethylene.	Propane, Carbon Dioxide, Acetylene, Ethane, Ethylene
A333 Grade 3 - 3½% Ni	–150	270	253	226	214	122		
A334 Grade 3 - 3½% Ni	–150	270	253	226	214	122		
Stainless Steels								
AISI - 300 Series (Type 301)	–150	113	103	94	86	56.4		
Alloy Steels								
A333 Grade 8 - 9% Ni	–320	209	189	180	156	91.3	Large tonnage oxygen-producing equipment. Transportation and storage of methane, oxygen, nitrogen, and argon.	Ethylene, Methane, Oxygen, Carbon Monoxide, Nitrogen, LNG, Argon
A334 Grade 8 - 9% Ni	–320	209	189	180	156	91.3		
A353 Grade 8 - 9% Ni	–320	209	189	180	156	91.3		
ASME Code Case 1308 - 9% Ni								
Stainless Steels								
AISI - 300 Series (Type 302)	–320	113	101	91	81	56.4		
Stainless Steels								
AISI - 300 Series (Type 304)	–452	113	117.6	91	90.0	56.4	In petrochemical, nuclear, missile, and other areas where purity of product is essential. Handling liquid hydrogen rocket fuel.	Hydrogen, Helium

(1) Exact composition selected for a given application is dependent upon type of product (e.g., plates, tubular products, etc.) and/or section size (i.e., thickness). For more information, consult API Standard 620 or the tank manufacturer.

(2) Values are maximum unless otherwise specified or a range is given.

(3) To ASTM A300 specifications.

(4) With modifications.

(5) The Charpy V-notch impact test may be used to qualify a particular grade of steel for a design temperature that is lower than is normally permitted. API Standard 620 and ASME Boiler & Pressure Vessel Code, Section VIII, Division I, should be consulted for specifics pertaining to the Charpy V-notch tests.

- Vapors that are generated by vaporization of the liquid stored in the tank.

A vapor recovery system should be sized to handle the total vapor from these two sources.

Displacement Losses — Vapors that are forced out of the tank are generally called displacement losses. A storage tank is generally not pumped completely dry when emptied. The vapor above the remaining liquid in the tank will expand to fill the void space at the vapor pressure of the liquid stored in the tank at storage temperature. As the tank is filled, the vapors are compressed into a smaller void space until the set pressure on the vent/relief system is reached. There are also some filling losses that are associated with the expansion of the liquid into the tank. Fig. 6-18 provides a graphical approach to estimating the filling losses as a percentage of the liquid being pumped into the tank.

Vaporization Losses — This type of loss is characterized as the vapors generated by heat gain through the shell, bottom, and roof. The total heat input is the algebraic sum of the radiant, conductive, and convective heat transfer. This type of loss is especially prevalent where light hydrocarbon liquids are stored in full pressure or refrigerated storage. This is less prevalent but still quite common in crude oil and finished product storage tanks. These vapors may be recovered by the use of a vapor recovery system.

To calculate vaporization in tanks, sum up the effects of radiant, conductive, and convective heat inputs to the tank. Approximate vapor losses in lb/hr can then be calculated by dividing the total heat input by the latent heat of vaporization of the product at the fluid temperature.

Liquid Equivalents of Tank Vapors — The following procedure may be followed to calculate the liquid equivalent of vapor volumes above stored LP-gas liquids:

General Approach

Data Required:

1. Liquid product composition in mole % or mole fraction.
2. Temperature and pressure of the product from which the liquid sample was obtained.
3. Vapor-liquid equilibrium K values at an assumed 1,000 psia convergence pressure (see Section 25).

Calculation Procedure:

1. With the liquid product composition, calculate the bubble point pressures of the product at assumed temperatures: i.e., 60°F, 80°F. From the bubble point calculations, a vapor pressure chart can be made for this specific product composition.
2. From the bubble point calculation in (1), the product vapor composition can be obtained: i.e.,

$$\Sigma(y_i) = \Sigma(K_i x_i) = 1.0 \qquad \textbf{Eq 6-4}$$

3. Calculate the compressibility factor for the vapor by either (a) or (b).
    a. Compressibility factor charts, Section 23. Pseudocritical and pseudoreduced temperatures and pressures must be calculated to obtain a compressibility factor.
    b. Equations of state.
4. Calculate the total number of moles of vapor for volume V, by using the modified ideal-gas equation:

$$PV = n_g ZRT, \; n_g = PV/ZRT = \text{total moles vapor} \qquad \textbf{Eq 6-5}$$

5. Calculate the gallons of liquid equivalent in the vapor phase by multiplying the total number of moles of vapor by the mole fraction of each component by the gal./mole factors for that component from Fig. 23-2.

$$\Sigma[n_g(y_i)\,(\text{gal./mole})_i] = 60°\text{F gallons in vapor phase} \qquad \textbf{Eq 6-6}$$

Example 6-8 — Determine three points of data used to plot Fig. 6-18.

1. Calculate composition of vapor at the three data points.

	Liquid C_3 Composition	Bubble-point pressures					
		0°F, 42 psia		60°F, 114 psia		120°F, 255 psia	
	x	K	y	K	y	K	y
C_2	0.03	4.35	0.1305	3.15	0.0945	2.55	0.0765
C_3	0.95	0.909	0.8633	0.945	0.8975	0.962	0.9136
iC_4	0.02	0.309	0.0062	0.398	0.0080	0.493	0.0099
	1.00		1.0000		1.0000		1.0000

2. Determine compressibility factor at the three points.

Vapor			
Average MW, $\Sigma\,(y_i MW_i)$	42.353	42.884	43.163
Pseudo T_c, °R	651	655	658
Pseudo P_c, psia	628	624	622
T_R	0.707	0.794	0.881
P_R	0.067	0.183	0.410
Z (Section 23)	0.913	0.855	0.730

3. Calculate moles of vapor per 1000 gal. of vapor.

$$n_g = \frac{PV}{ZRT} \quad \text{and} \quad n_i = (n_g y_i)$$

$$V = \frac{1{,}000}{7.48} = 133.7 \text{ cu ft}$$

$+n_i$, moles	C_2	0.1626	0.3019	0.5741
	C_3	1.0757	2.8673	6.8556
	iC_4	0.0077	0.0256	0.0743
	$n_g = \Sigma n_i$	1.2460	3.1948	7.5040

4. Calculate liquid equivalent gallons (60°F) per 1000 gallons vapor.

	gal./mole			
C_2	10.126	1.646	3.057	5.813
C_3	10.433	11.223	29.915	71.524
iC_4	12.386	0.095	0.317	0.920
Liquid equivalent, gal.		12.964	33.289	78.257

Suggested Simplified Approach

By using a typical product analysis, calculations can be made as outlined above, and from these calculations (see example 6-8) vapor pressure and gallon equivalent charts can be drawn as shown in Fig. 6-19. A convenient unit of vapor space volume should be used, such as 1,000 gal.

Vapor Recovery Systems

Vapor recovery systems are generally used to prevent pollution of the environment and to recover valuable product. Two basic types of vapor recovery systems may be encountered. One is designed to gather toxic wastes that would pollute the atmosphere but are not valuable enough to warrant full recovery. In this type system, the vapors are generally gathered and incinerated. If incineration will not meet government disposal standards, the vapors are generally compressed and condensed into a liquid and sent to a liquid disposal system.

The vapor recovery systems that are typically used with refrigerated storage tanks are generally integrated with the product refrigeration systems. In these types of systems, the vapors are generally compressed, condensed, and put back into the tank with the fill stream.

Vapor recovery systems on atmospheric pressure, ambient temperature storage tanks do not normally require a refrigeration system to condense the vapors. They are generally compressed through one stage of compression, condensed in either an air cooled or water cooled exchanger, and then put back into the tank. Fig. 6-20 provides the flow schematic of this system.

FIG. 6-18

Filling Losses from Storage Containers

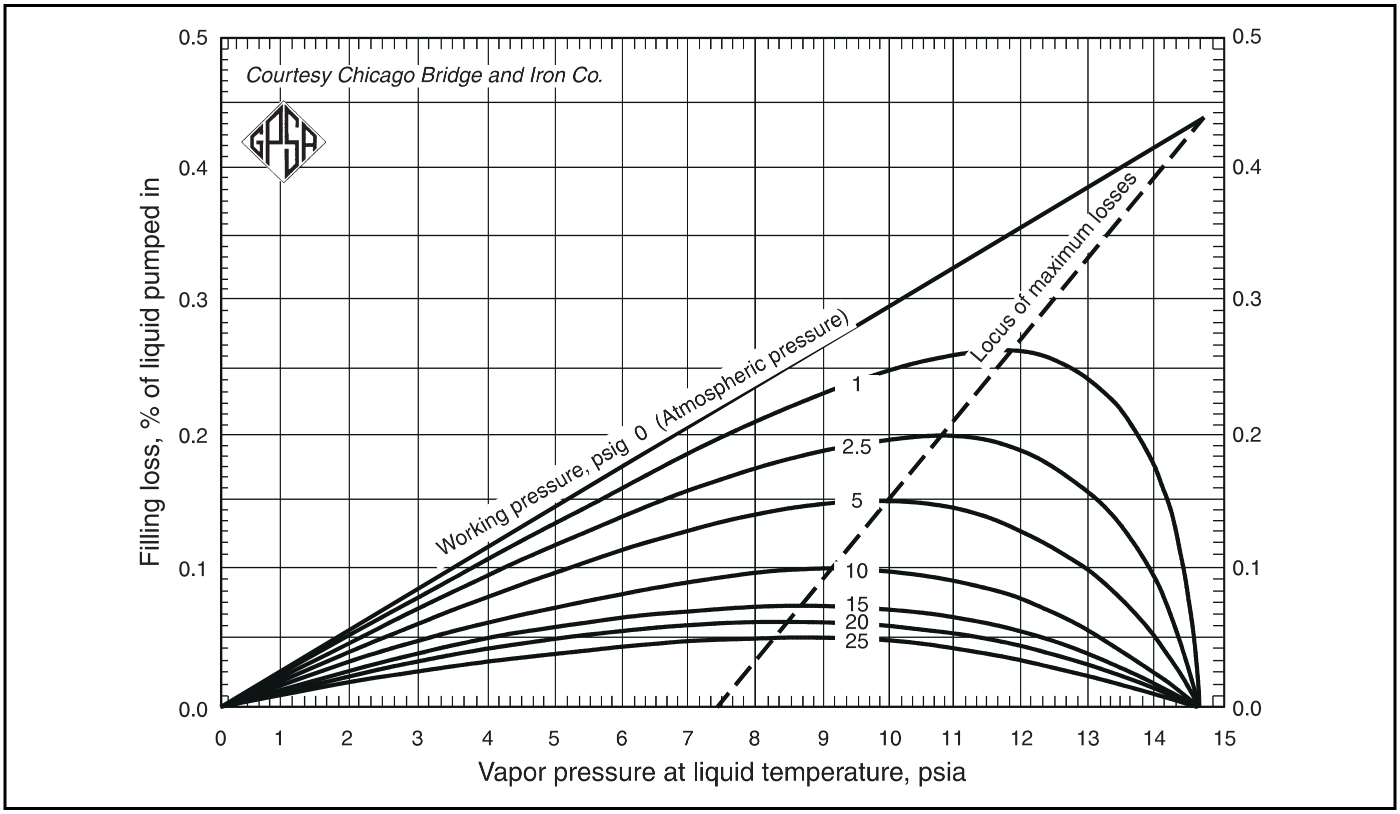

FIG. 6-19

Liquid Equivalent of Tank Vapor

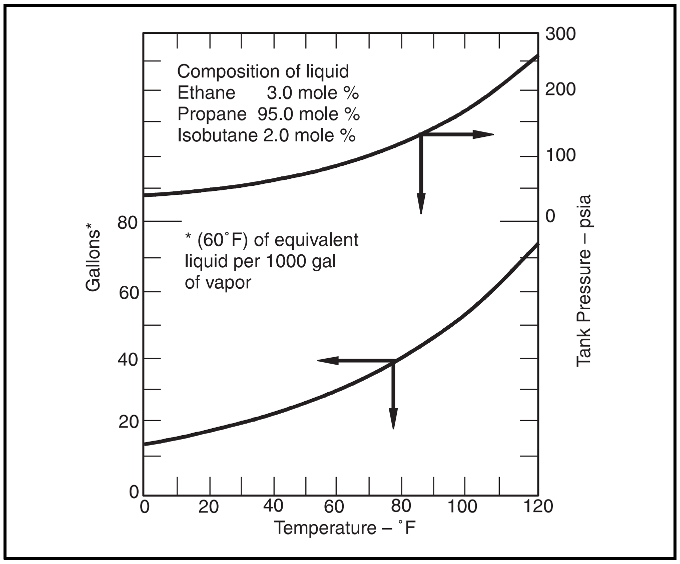

FIG. 6-20

Ambient Temperature Vapor Recovery Cycle

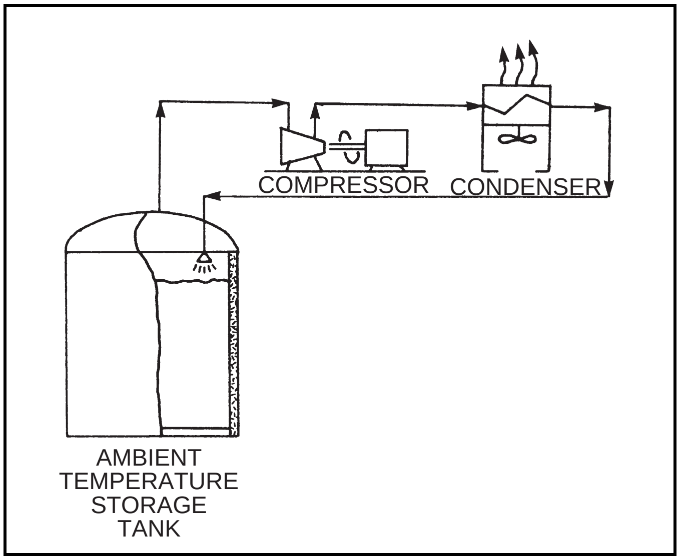

LIQUID STORAGE

Desirability of Large Units

The Hortonsphere vessel permits the storage of a large volume in one unit with only one set of pipe connections and fittings. Batteries of shop built-up cylindrical tanks have been used to provide large volumes of pressure storage. This practice necessitates the use of multiple pipe connections and the duplication of tank fittings, vents and foundations. A battery of cylindrical tanks will generally occupy about four times more ground space than the same volume of storage in a Hortonsphere vessel. This factor is an important consideration in many locations where land values are high and space is at a premium.

The Hortonsphere vessel has less surface area for a given capacity than a container of any other shape. It is also true that the larger it is, the less its surface area per unit of volume. For these reasons, the liquid stored in a Hortonsphere vessel of large capacity changes temperature more slowly than in small vessels. Since the required operating pressure is a function of the temperature, the internal pressure in a large Hortonsphere vessel for liquid storage is less likely to exceed the setting of the relief valve during short periods of extremely hot weather. A large Hortonsphere vessel is, therefore, more efficient in preventing loss of vapors from a given volatile liquid than a smaller one designed for the same working pressure.

The larger units of storage are also more desirable because the cost per unit of capacity is less. Having less surface area, they provide a structure that is more economical to paint and maintain. The cost of insulation, when required, is also lower per barrel of capacity.

Capacities

Hortonsphere vessels for liquid storage are commonly built in the English and Metric capacities shown in Fig. 6-21. Intermediate or larger sizes and pressures can be supplied if desired.

FIG. 6-21

Hortonsphere Vessels for Liquid Storage

Nominal Capacity (Barrels)	Diameter (Ft-In)	ASME VIII Division 1 Pressure (psi)	ASME VIII Division 2 Pressure (psi)	Actual Volume (Ft^3)	Inside Surface Area (Ft^2)
1,000	22-3	380	532	5,768	1,555
1,500	25-6	327	456	8,682	2,043
2,000	28-0	306	432	11,494	2,463
2,500	30-3	282	399	14,494	2,875
3,000	32-0	266	377	17,157	3,217
4,000	35-3	240	341	22,934	3,904
5,000	38-0	222	315	28,731	4,536
6,000	40-6	207	295	34,783	5,153
7,500	43-6	191	273	43,099	5,945
10,000	48-0	171	246	57,906	7,238
12,000	51-0	160	230	69,456	8,171
15,000	54-9	147	213	85,931	9,417
20,000	60-6	131	190	115,948	11,499
25,000	65-0	120	175	143,793	13,273
30,000	69-0	111	163	172,007	14,957
40,000	76-0	98	145	229,847	18,146
50,000	81-10	89	132	286,939	21,038

Gaging Table

A theoretical gaging table can be furnished with each Hortonsphere vessel for liquid service. This table is accurate because each installation conforms closely with the specified dimensions. The table shows the liquid volume for every inch of depth.

Accessories

The Hortonsphere vessel is furnished with a standard set of accessories including a stairway, handrail at the top, and top and bottom manholes. Nozzles are furnished as specified. One or more dependable pressure relief valves must be provided and, in most cases, vacuum relief valves are recommended for spheres designed for low internal pressure.

PARTIAL VOLUMES IN STORAGE TANKS

The volume or size of a storage tank is determined by the configuration of the tank that is used (horizontal or vertical cylinder, sphere, rectangle). Each configuration uses different formulas for determining the total and partial volumes. Figs. 6-22 through 6-28 can be used to determine total and partial volumes in most common storage tanks.

STANDARDS AND CODES

ANSI A12.1
Safety Requirements for Floor and Wall Openings, Railings, and Toeboards.

ANSI A14.1
Requirements for Fixed Industrial Stairs.

ANSI A14.3
Safety Code for Fixed Ladders.

ANSI A11.197
Measurement and Calibration of Upright Cylindrical Tanks, Method for (ASTM D 1220-65, API 2550).

ANSI Z11.198
Measurement and Calibration of Horizontal Tanks, Method for (ASTM D 1410-65, API 2551).

ANSI A11.1988
Measurement and Calibration of Spheres and Spheroids, Method for (ASTM D 1408-65, API 2552).

ANSI Z11.202
Liquid Calibration of Tanks (ASTM D 1406-65 API 2555).

ANSI/ASME B31.4
Liquid Petroleum Transportation Piping System.

API Recommended Practices for Leached Underground Storage prepared by API Committee 510.

API Specification 12 B
Specifications for Bolted Tanks for Storage of Production Liquids.

API Specification 12 D
Specifications for Field Welded Tanks for Storage of Production Liquids.

API Specification 12 F
Specifications for Shop Welded Tanks for Storage of Production Liquids.

API Standard 620
Recommended Rules for Design and Construction of Large, Welded Low-Pressure Storage Tanks.

API Standard 650
Welded Steel Tanks for Crude Storage.

FIG. 6-22

Circumference, Area, and Volume of Circles and Cylinders

Diam. ft	Circumference		Area of Circle		Volume of cylinder/foot of height			Diam., ft
	Feet	Meters	sq ft	sq meters	U.S. gal.	Imperial gal.	U.S. bbls (42 gal.)	
1	3.14	0.9576	0.785	.0730	5.9	4.9	0.140	1
2	6.28	1.9151	3.142	.2919	23.5	19.6	0.560	2
3	9.42	2.8727	7.069	.6567	52.9	44.0	1.259	3
4	12.57	3.8302	12.566	1.1675	94.0	78.3	2.238	4
5	15.71	4.7878	19.635	1.8241	146.9	122.3	3.497	5
6	18.85	5.7454	28.274	2.6268	211.5	176.1	5.04	6
7	21.99	6.7029	38.485	3.5753	287.9	239.7	6.85	7
8	25.13	7.6605	50.266	4.6698	376.0	313.1	8.95	8
9	28.27	8.6180	63.617	5.9102	475.9	396.3	11.33	9
10	31.42	9.5756	78.540	7.2966	587.5	489.2	13.99	10
11	34.56	10.5332	95.033	8.8289	710.9	591.9	16.93	11
12	37.70	11.4907	113.097	10.5071	846.0	704.5	20.14	12
13	40.84	12.4483	132.732	12.3312	992.9	826.8	23.64	13
14	43.98	13.4059	153.938	14.3013	1,151.5	958.9	27.42	14
15	47.12	14.3634	176.715	16.4173	1,321.9	1,100.7	31.47	15
16	50.27	15.3210	201.062	18.6792	1,504.0	1,252.4	35.81	16
17	53.41	16.2785	226.980	21.0871	1,697.9	1,413.8	40.43	17
18	56.55	17.2361	254.469	23.6409	1,903.6	1,585.1	45.32	18
19	59.69	18.1937	283.529	26.3407	2,120.9	1,766.1	50.50	19
20	62.83	19.1512	314.159	29.1863	2,350.1	1,956.9	55.95	20
22	69.12	21.0663	380.133	35.3154	2,843.6	2,367.8	67.70	22
24	75.40	22.9815	452.389	42.0283	3,384.1	2,817.9	80.57	24
26	81.68	24.8966	530.929	49.3249	3,971.6	3,307.1	94.56	26
28	87.97	26.8117	615.752	57.2052	4,606.1	3,835.4	109.67	28
30	94.25	28.7268	706.858	65.6692	5,287.7	4,402.9	125.90	30
32	100.53	30.6420	804.248	74.7170	6,016.2	5,009.6	143.24	32
34	106.81	32.5571	907.920	84.3485	6,791.7	5,655.3	161.71	34
36	113.10	34.4722	1,017.88	94.5637	7,614.2	6,340.2	181.29	36
38	119.38	36.3873	1,134.11	105.3626	8,483.8	7,064.3	201.99	38
40	125.66	38.3024	1,256.64	116.7453	9,400.3	7,827.4	223.82	40
42	131.95	40.2176	1,385.44	128.7117	10,363.8	8,629.7	246.76	42
44	138.23	42.1327	1,520.53	141.2618	11,374.4	9,471.2	270.82	44
46	144.51	44.0478	1,661.90	154.3956	12,431.9	10,351.8	296.00	46
48	150.80	45.9629	1,809.56	168.1132	13,536.4	11,271.5	322.30	48
50	157.08	47.8781	1,963.50	182.4145	14,688.0	12,230.4	349.71	50
55	172.79	52.6659	2,375.83	220.7215	17,772.4	14,798.7	423.15	55
60	188.50	57.4537	2,827.43	262.6769	21,150.7	17,611.7	503.59	60
65	204.20	62.2415	3,318.31	308.2805	24,822.7	20,669.3	591.02	65
70	219.91	67.0293	3,848.45	357.5324	28,788.4	23,971.5	685.44	70
75	235.62	71.8171	4,417.86	410.4326	33,047.9	27,518.3	786.86	75
80	251.33	76.6049	5,026.55	466.9811	37,601.2	31,309.7	895.27	80
85	267.04	81.3927	5,674.50	527.1779	42,448.2	35,345.8	1,010.67	85
90	282.74	86.1805	6,361.73	591.0230	47,589.0	39,626.4	1,133.07	90
95	298.45	90.9683	7,088.22	658.5163	53,023.5	44,151.6	1,262.47	95
100	314.16	95.7561	7,853.98	729.6580	58,751.9	48,921.5	1,398.85	100
110	345.58	105.3317	9,503.32	882.8862	71,089.7	59,195.0	1,692.61	110
120	376.99	114.9073	11,309.73	1,050.7075	84,602.7	70,446.9	2,014.35	120
130	408.41	124.4829	13,273.23	1,233.1220	99,290.6	82,677.3	2,364.06	130
140	439.82	134.0585	15,393.80	1,430.1297	115,153.6	95,886.1	2,741.75	140
150	471.24	143.6342	17,671.46	1,641.7305	132,191.7	110,073.3	3,147.42	150
160	502.65	153.2098	20,106.19	1,867.9245	150,404.7	125,239.0	3,581.07	160
170	534.07	162.7854	22,698.00	2,108.7116	169,792.8	141,383.1	4,042.69	170
180	565.49	172.3610	25,446.90	2,364.0919	190,356.0	158,505.6	4,532.29	180
190	596.90	181.9366	28,352.87	2,634.0654	212,094.2	176,606.5	5,049.86	190
200	628.32	191.5122	31,415.93	2,918.6320	235,007.4	195,685.9	5,595.42	200

NOTES:

1. If diameters are assumed as meters, values in the columns "Circumference Feet" and "Area of Circle Square Feet" will represent circumference in meters and area of circle in square meters respectively.
2. If diameters are assumed as meters, values in column "Area of Circle Square Feet" will represent volume of cylinder in cubic meters per vertical meter of height.

Formula to determine capacity per foot of vertical height of cylinder.

D = Diameter in Feet
$0.1398854\ D^2$ = Barrels of 42 U.S. Gallons per vertical foot.
$5.875185\ D^2$ = U.S. Gallons per vertical foot.
$4.892148\ D^2$ = Imperial Gallons per vertical foot.
$0.022240\ D^2$ = Cubic Meters per vertical foot.
$0.785398\ D^2$ (D in meters) = Cubic meters per vertical meter.

Fig. 6-23

Partial Volume in Horizontal and Vertical Storage Tanks with Ellipsoidal or Hemispherical Heads

HORIZONTAL CYLINDRICAL TANKS

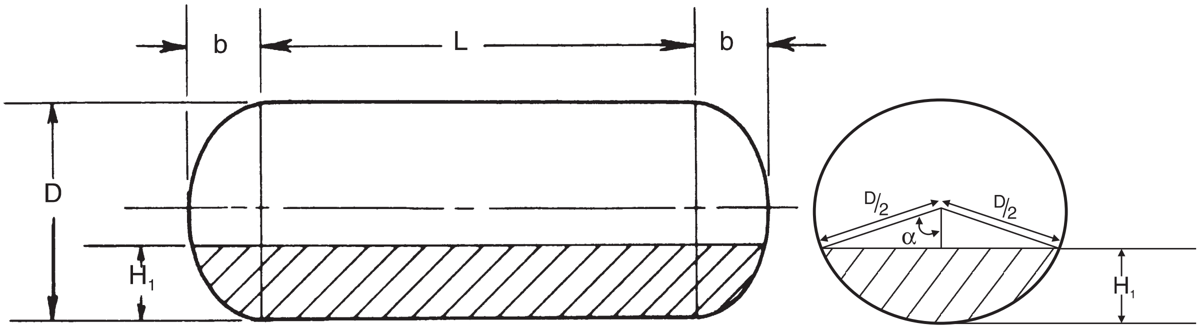

Total volume = volume in 2 heads + volume in cylinder

$$= 1/6\ \pi\ K_1\ D^3 + 1/4\ \pi\ D^2\ L$$

$K_1 = 2\ b/D$ $\quad$ $Ze = H_1/D$ $\quad$ $Zc = H_1/D$

$$\alpha = 2 \text{ x Atan}\left(\frac{H_1}{\sqrt{\left(2 \text{ x } H_1 \text{ x } \frac{D}{2}\right) - H_1{}^2}}\right)$$

where α is in radians

Partial volume $= 1/6\ \pi\ K_1\ D^3 \times [f(Ze)] + 1/4\ \pi\ D^2\ L \times [f(Zc)]$

f(Zc) = Horizontal cylinder coefficient (see Fig. 6–24) or $f(Zc) = \left(\frac{\alpha - \sin(\alpha) \text{ x } \cos(\alpha)}{\pi}\right)$

f(Ze) = Ellipsoidal coefficient (see Fig. 6–25) or $f(Ze) = -\left(\frac{H_1}{D}\right)^2 \text{ x } \left(-3 + \frac{2H_1}{D}\right)$

For elliptical 2:1 heads, b = 1/4 D , K_1 = ½

VERTICAL CYLINDRICAL TANKS

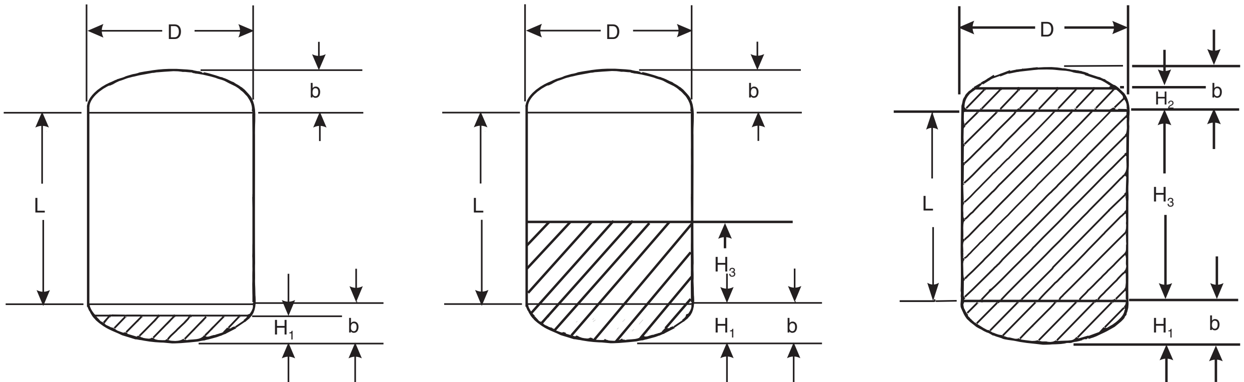

Total volume = volume in heads + volume in cylinder

$$= 1/6\ \pi\ K_1\ D^3 + 1/4\ \pi\ D^2\ L$$

Partial volume $= 1/6\ \pi\ K_1\ D^3 \times [f(Ze)] + 1/4\ \pi\ D^2\ H_3$

$K_1 = 2\ b/D$

$Ze = (H_1 + H_2)/K_1\ D$

f(Ze) = Ellipsoidal coefficient (see Fig. 6–25) or $f(Ze) = -\left(\frac{H_1 + H_2}{2b}\right)^2 \text{ x } \left(-3 + \left(\frac{H_1 + H_2}{b}\right)\right)$

FIG. 6-24

Coefficients for Partial Volumes of Horizontal Cylinders, f(Zc)

Zc	0	1	2	3	4	5	6	7	8	9
.00	.000000	.000053	.000151	.000279	.000429	.000600	.000788	.000992	.001212	.001445
.02	.004773	.005134	.005503	.005881	.006267	.006660	.007061	.007470	.007886	.008310
.04	.013417	.013919	.014427	.014940	.015459	.015985	.016515	.017052	.017593	.018141
.06	.024496	.025103	.025715	.026331	.026952	.027578	.028208	.028842	.029481	.030124
.08	.037478	.038171	.038867	.039569	.040273	.040981	.041694	.042410	.043129	.043852
.10	.052044	.052810	.053579	.054351	.055126	.055905	.056688	.057474	.058262	.059054
.12	.067972	.068802	.069633	.070469	.071307	.072147	.072991	.073836	.074686	.075539
.14	.085094	.085979	.086866	.087756	.088650	.089545	.090443	.091343	.092246	.093153
.16	.103275	.104211	.105147	.106087	.107029	.107973	.108920	.109869	.110820	.111773
.18	.122403	.123382	.124364	.125347	.126333	.127321	.128310	.129302	.130296	.131292
.20	.142378	.143398	.144419	.145443	.146468	.147494	.148524	.149554	.150587	.151622
.22	.163120	.164176	.165233	.166292	.167353	.168416	.169480	.170546	.171613	.172682
.24	.184550	.185639	.186729	.187820	.188912	.190007	.191102	.192200	.193299	.194400
.26	.206600	.207718	.208837	.209957	.211079	.212202	.213326	.214453	.215580	.216708
.28	.229209	.230352	.231498	.232644	.233791	.234941	.236091	.237242	.238395	.239548
.30	.252315	.253483	.254652	.255822	.256992	.258165	.259338	.260512	.261687	.262863
.32	.275869	.277058	.278247	.279437	.280627	.281820	.283013	.284207	.285401	.286598
.34	.299814	.301021	.302228	.303438	.304646	.305857	.307068	.308280	.309492	.310705
.36	.324104	.325326	.326550	.327774	.328999	.330225	.331451	.332678	.333905	.335134
.38	.348690	.349926	.351164	.352402	.353640	.354879	.356119	.357359	.358599	.359840
.40	.373530	.374778	.376026	.377275	.378524	.379774	.381024	.382274	.383526	.384778
.42	.398577	.399834	.401092	.402350	.403608	.404866	.406125	.407384	.408645	.409904
.44	.423788	.425052	.426316	.427582	.428846	.430112	.431378	.432645	.433911	.435178
.46	.449125	.450394	.451663	.452932	.454201	.455472	.456741	.458012	.459283	.460554
.48	.474541	.475814	.477086	.478358	.479631	.480903	.482176	.483449	.484722	.485995
.50	.500000	.501274	.502548	.503821	.505094	.506367	.507640	.508913	.510186	.511458
.52	.525459	.526731	.528003	.529275	.530547	.531818	.533090	.534362	.535633	.536904
.54	.550875	.552143	.553413	.554682	.555950	.557218	.558486	.559754	.561021	.562288
.56	.576212	.577475	.578739	.580002	.581264	.582527	.583789	.585051	.586313	.587574
.58	.601423	.602680	.603937	.605192	.606447	.607702	.608956	.610210	.611463	.612717
.60	.626470	.627718	.628964	.630210	.631455	.632700	.633944	.635189	.636432	.637675
.62	.651310	.652545	.653780	.655015	.656249	.657481	.658714	.659946	.661177	.662407
.64	.675896	.677119	.678340	.679561	.680781	.681999	.683217	.684434	.685650	.686866
.66	.700186	.701392	.702597	.703802	.705005	.706207	.707409	.708610	.709809	.711008
.68	.724131	.725318	.726505	.727690	.728874	.730058	.731240	.732422	.733603	.734782
.70	.747685	.748852	.750017	.751181	.752345	.753506	.754667	.755827	.756984	.758141
.72	.770791	.771935	.773076	.774217	.775355	.776493	.777629	.778765	.779898	.781030
.74	.793400	.794517	.795632	.796747	.797859	.798969	.800078	.801186	.802291	.803396
.76	.815450	.816537	.817622	.818706	.819788	.820869	.821947	.823024	.824100	.825175
.78	.836880	.837934	.838987	.840037	.841085	.842133	.843178	.844221	.845263	.846303
.80	.857622	.858639	.859655	.860668	.861680	.862690	.863698	.864704	.865708	.866709
.82	.877597	.878575	.879550	.880523	.881494	.882462	.883428	.884393	.885354	.886314
.84	.896725	.897657	.898586	.899514	.900440	.901362	.902283	.903201	.904116	.905029
.86	.914906	.915788	.916668	.917544	.918419	.919291	.920159	.921025	.921888	.922749
.88	.932028	.932853	.933677	.934497	.935313	.936128	.936938	.937747	.938551	.939352
.90	.947956	.948717	.949476	.950232	.950983	.951732	.952477	.953218	.953957	.954690
.92	.962522	.963211	.963896	.964577	.965253	.965927	.966595	.967260	.967919	.968576
.94	.975504	.976106	.976704	.977297	.977885	.978467	.979045	.979618	.980187	.980750
.96	.986583	.987080	.987568	.988053	.988530	.989001	.989466	.989924	.990375	.990821
.98	.995227	.995579	.995923	.996257	.996581	.996896	.997200	.997493	.997777	.998048
1.00	1.000000									

FIG. 6-25

Table of Coefficients and Formulas for Determining Partial Volumes in Ellipsoids and Spheres

GENERAL ELLIPSOID

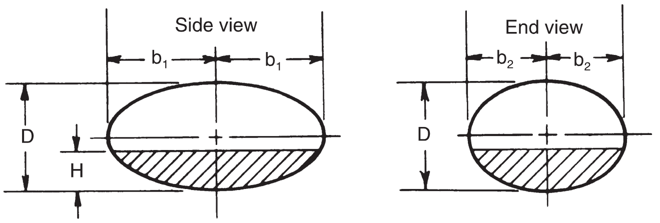

Total volume of ellipsoid = $1/6\ \pi\ K_1K_2\ D^3$

Partial Volume = $1/6\ \pi\ K_1K_2\ D^3\ [f(Ze)]$

$K_1 = 2b_1/D \quad K_2 = 2b_2/D$

$Ze = H/D$ f(Ze) = ellipsoidal coefficient (see below) or $= -\left(\frac{H_1}{D}\right)^2 \times \left(-3 + \frac{2H_1}{D}\right)$

Coefficients for Partial Volumes of Ellipsoids or Spheres, f(Ze)

Ze	0	1	2	3	4	5	6	7	8	9
.00	.000000	.000003	.000012	.000027	.000048	.000075	.000108	.000146	.000191	.000242
.02	.001184	.001304	.001431	.001563	.001700	.001844	.001993	.002148	.002308	.002474
.04	.004672	.004905	.005144	.005388	.005638	.005893	.006153	.006419	.006691	.006968
.06	.010368	.010709	.011055	.011407	.011764	.012126	.012493	.012865	.013243	.013626
.08	.018176	.018620	.019069	.019523	.019983	.020447	.020916	.021390	.021869	.022353
.10	.028000	.028542	.029090	.029642	.030198	.030760	.031326	.031897	.032473	.033053
.12	.039744	.040380	.041020	.041665	.042315	.042969	.043627	.044290	.044958	.045630
.14	.053312	.054037	.054765	.055499	.056236	.056978	.057724	.058474	.059228	.059987
.16	.068608	.069416	.070229	.071046	.071866	.072691	.073519	.074352	.075189	.076029
.18	.085536	.086424	.087315	.088210	.089109	.090012	.090918	.091829	.092743	.093660
.20	.104000	.104962	.105927	.106896	.107869	.108845	.109824	.110808	.111794	.112784
.22	.123904	.124935	.125970	.127008	.128049	.129094	.130142	.131193	.132247	.133305
.24	.145152	.146248	.147347	.148449	.149554	.150663	.151774	.152889	.154006	.155127
.26	.167648	.168804	.169963	.171124	.172289	.173456	.174626	.175799	.176974	.178153
.28	.191296	.192507	.193720	.194937	.196155	.197377	.198601	.199827	.201056	.202288
.30	.216000	.217261	.218526	.219792	.221060	.222331	.223604	.224879	.226157	.227437
.32	.241664	.242971	.244280	.245590	.246904	.248219	.249536	.250855	.252177	.253500
.34	.268192	.269539	.270889	.272240	.273593	.274948	.276305	.277663	.279024	.280386
.36	.295488	.296871	.298256	.299643	.301031	.302421	.303812	.305205	.306600	.307996
.38	.323456	.324870	.326286	.327703	.329122	.330542	.331963	.333386	.334810	.336235
.40	.352000	.353441	.354882	.356325	.357769	.359215	.360661	.362109	.363557	.365007
.42	.381024	.382486	.383949	.385413	.386878	.388344	.389810	.391278	.392746	.394216
.44	.410432	.411911	.413390	.414870	.416351	.417833	.419315	.420798	.422281	.423765
.46	.440128	.441619	.443110	.444601	.446093	.447586	.449079	.450572	.452066	.453560
.48	.470016	.471514	.473012	.474510	.476008	.477507	.479005	.480504	.482003	.483593
.50	.500000	.501500	.503000	.504500	.506000	.507500	.509000	.510499	.511999	.513499
.52	.529984	.531481	.532979	.534476	.535972	.537469	.538965	.540461	.541956	.543451
.54	.559872	.561362	.562852	.564341	.565830	.567318	.568805	.570292	.571779	.573265
.56	.589568	.591046	.592523	.594000	.595476	.596951	.598425	.599898	.601371	.602843
.58	.618976	.620437	.621897	.623356	.624815	.626272	.627728	.629183	.630637	.632090
.60	.648000	.649439	.650878	.652315	.653750	.655185	.656618	.658050	.659481	.660910
.62	.676544	.677957	.679368	.680778	.682187	.683594	.684999	.686403	.687806	.689207
.64	.704512	.705894	.707273	.708652	.710028	.711403	.712776	.714147	.715516	.716884
.66	.731808	.733153	.734497	.735839	.737178	.738516	.739851	.741185	.742517	.743846
.68	.758336	.759641	.760943	.762243	.763541	.764837	.766130	.767422	.768711	.769997
.70	.784000	.785259	.786515	.787769	.789021	.790270	.791516	.792761	.794002	.795241
.72	.808704	.809912	.811118	.812321	.813521	.814719	.815914	.817106	.818295	.819482
.74	.832352	.833505	.834655	.835802	.836946	.838088	.839226	.840362	.841494	.842624
.76	.854848	.855941	.857031	.858117	.859201	.860281	.861358	.862432	.863502	.864570
.78	.876096	.877124	.878148	.879170	.880187	.881202	.882213	.883220	.884224	.885225
.80	.896000	.896958	.897913	.898864	.899811	.900755	.901695	.902631	.903564	.904493
.82	.914464	.915348	.916228	.917103	.917976	.918844	.919708	.920568	.921425	.922277
.84	.931392	.932196	.932997	.933793	.934585	.935373	.936157	.936936	.937712	.938483
.86	.946688	.947408	.948124	.948836	.949543	.950246	.950944	.951638	.952328	.953013
.90	.972000	.972538	.973070	.973598	.974121	.974640	.975153	.975662	.976165	.976664
.92	.981824	.982263	.982697	.983126	.983550	.983969	.984382	.984791	.985194	.985593
.94	.989632	.989968	.990298	.990623	.990943	.991258	.991567	.991871	.992169	.992462
.96	.995328	.995556	.995778	.995994	.996205	.996411	.996611	.996805	.996994	.997177
.98	.998816	.998931	.999040	.999143	.999240	.999332	.999417	.999497	.999571	.999640
1.00	1.000000									

Note: Coefficients apply for the volume of 2 ellipsoidal or hemispherical heads not the volume for 1 head.

FIG. 6-26

Approximate Surface and Volume of Spheres

Diameter in Ft.	Surface of Sphere in Sq. Ft.	Volume of Sphere			Diameter in Ft.	Surface of Sphere in Sq. Ft.	Volume of Sphere		
		Cu. Ft.	U.S. Gals.	U.S. Bbls.			Cu. Ft.	U.S. Gals.	U.S. Bbls.
1	3.14	0.52	3.92	.09	61	11,690	118,847	889,037	21,168
2	12.57	4.19	31.33	.75	62	12,076	124,788	933,481	22,226
3	28.27	14.14	105.75	2.52	63	12,469	130,924	979,382	23,319
4	50.27	33.51	250.67	5.97	64	12,868	137,258	1,026,764	24,447
5	78.54	65.45	489.60	11.66	65	13,273	143,793	1,075,649	25,611
6	113.10	113.10	846.03	20.14	66	13,685	150,533	1,126,062	26,811
7	153.94	179.59	1,343.46	31.99	67	14,103	157,479	1,178,026	28,048
8	201.06	268.08	2,005.40	47.75	68	14,527	164,636	1,231,565	29,323
9	254.47	381.70	2,855.34	67.98	69	14,957	172,007	1,286,701	30,636
10	314.16	523.60	3,916.79	93.26	70	15,394	179,594	1,343,460	31,987
11	380	697	5,213	124	71	15,837	187,402	1,401,863	33,378
12	452	905	6,768	161	72	16,286	195,432	1,461,935	34,808
13	531	1,150	8,605	205	73	16,742	203,689	1,523,699	36,279
14	616	1,437	10,748	256	74	17,203	212,175	1,587,178	37,790
15	707	1,767	13,219	315	75	17,671	220,893	1,652,397	39,343
16	804	2,145	16,043	382	76	18,146	229,847	1,719,378	40,938
17	908	2,572	19,243	458	77	18,627	239,040	1,788,145	42,575
18	1,018	3,054	22,843	544	78	19,113	248,475	1,858,721	44,255
19	1,134	3,591	26,865	640	79	19,607	258,155	1,931,131	45,979
20	1,257	4,189	31,334	746	80	20,106	268,083	2,005,398	47,748
21	1,385	4,849	36,273	864	81	20,612	278,262	2,081,544	49,561
22	1,521	5,575	41,706	993	82	21,124	288,696	2,159,594	51,419
23	1,662	6,371	47,656	1,135	83	21,642	299,387	2,239,571	53,323
24	1,810	7,238	54,146	1,289	84	22,167	310,339	2,321,498	55,274
25	1,963	8,181	61,200	1,457	85	22,698	321,555	2,405,400	57,271
26	2,124	9,203	68,842	1,639	86	23,235	333,038	2,491,299	59,317
27	2,290	10,306	77,094	1,836	87	23,779	344,792	2,579,219	61,410
28	2,463	11,494	85,981	2,047	88	24,328	356,818	2,669,184	63,552
29	2,642	12,770	95,527	2,274	89	24,885	369,121	2,761,217	65,743
30	2,827	14,137	105,753	2,518	90	25,447	381,704	2,855,341	67,984
31	3,019	15,599	116,685	2,778	91	26,016	394,569	2,951,581	70,276
32	3,217	17,157	128,345	3,056	92	26,590	407,720	3,049,959	72,618
33	3,421	18,817	140,758	3,351	93	27,172	421,161	3,150,499	75,012
34	3,632	20,580	153,946	3,665	94	27,759	434,893	3,253,225	77,458
35	3,848	22,449	167,932	3,998	95	28,353	448,921	3,358,160	79,956
36	4,072	24,429	182,742	4,351	96	28,953	463,247	3,465,327	82,508
37	4,301	26,522	198,397	4,724	97	29,559	477,875	3,574,750	85,113
38	4,536	28,731	214,922	5,117	98	30,172	492,807	3,686,453	87,773
39	4,778	31,059	232,340	5,532	99	30,791	508,048	3,800,459	90,487
40	5,027	33,510	250,675	5,968	100	31,416	523,599	3,916,792	93,257
41	5,281	36,087	269,949	6,427	101	32,047	539,465	4,035,475	96,083
42	5,542	38,792	290,187	6,909	102	32,685	555,647	4,156,531	98,965
43	5,809	41,630	311,412	7,415	103	33,329	572,151	4,279,984	101,904
44	6,082	44,602	333,648	7,944	104	33,979	588,978	4,405,858	104,901
45	6,362	47,713	356,918	8,498	105	34,636	606,131	4,534,176	107,957
46	6,648	50,965	381,245	9,077	106	35,299	623,615	4,664,962	111,071
47	6,940	54,362	406,653	9,682	107	35,968	641,431	4,798,239	114,244
48	7,238	57,906	433,166	10,313	108	36,644	659,584	4,934,030	117,477
49	7,543	61,601	460,807	10,972	109	37,325	678,076	5,072,359	120,771
50	7,854	65,450	489,599	11,657	110	38,013	696,910	5,213,250	124,125
51	8,171	69,456	519,566	12,371	111	38,708	716,090	5,356,726	127,541
52	8,495	73,622	550,732	13,113	112	39,408	735,619	5,502,811	131,019
53	8,825	77,952	583,120	13,884	113	40,115	755,499	5,651,527	134,560
54	9,161	82,448	616,754	14,685	114	40,828	775,735	5,802,900	138,164
55	9,503	87,114	651,656	15,516	115	41,548	796,329	5,956,951	141,832
56	9,852	91,952	687,851	16,377	116	42,273	817,284	6,113,705	145,564
57	10,207	96,967	725,362	17,271	117	43,005	838,603	6,273,185	149,362
58	10,568	102,160	764,213	18,196	118	43,744	860,290	6,435,415	153,224
59	10,936	107,536	804,427	19,153	119	44,488	882,348	6,600,417	157,153
60	11,310	113,097	846,027	20,144	120	45,239	904,779	6,768,217	161,148

Note: If diameters are assumed as meters, values in columns "Surface of Sphere in Square Feet" and "Volume of Sphere — Cubic Feet" will represent Surface of Sphere in Square Meters and Volume of Sphere in Cubic Meters respectively.

Surface area of sphere = 3.141593 D^2 Square Feet

$$\text{Volume of Sphere} = \begin{cases} 0.523599\ D^3 \text{ Cubic Feet} \\ 0.093257\ D^3 \text{ Barrels of 42 U.S. Gallons} \end{cases}$$

Number of barrels of 42 U.S. Gallons at any inch in a true sphere = $(3d - 2h)\ h^2 \times 0.000\ 053\ 968\ 1$ where d is diameter of sphere and h is depth of liquid both in inches.

FIG. 6-27

Partial Volumes of Spheres — U.S. Gallons

Diameter of Tank		Depth of Liquid, ft.															
ft	(in.)	2	4	6	8	10	12	14	16	18	20	25	30	35	40	45	50
2	(24)	31.3	–														
4	(48)	125.3	250.7	–													
6	(72)	219.3	626.7	846	–												
8	(96)	313.3	1003	1692	2005	–											
10	(120)	407.3	1329	2538	3509	3917	–										
12	(144)	501.3	1755	3384	5013	6267	6768	–									
14	(168)	595.4	2131	4230	6518	8617	10152	10748	–								
16	(192)	689.4	2507	5076	8022	10967	13536	15354	16043	–							
18	(216)	783.4	2883	5822	9526	13317	16920	19960	22059	22843	–						
20	(240)	877.4	3259	6768	11030	15667	20305	24566	38075	30457	31334	–					
25	(300)	1112	4199	8883	14790	21542	28765	36081	43116	49492	54832	51200	–				
30	(360)	1347	5139	10998	18550	27417	37225	47597	58156	68528	78336	97920	105753	–			
35	(420)	1582	6079	13113	22310	33293	45685	59112	73197	87564	101836	134639	158630	167932	–		
40	(480)	1817	7019	15228	26070	39168	54146	70627	88237	106599	125338	171359	211506	239903	250676	–	
45	(540)	2052	7959	17344	29830	45053	52606	82143	103278	125635	148838	208079	264383	311874	344677	356918	–
50	(600)	2287	8899	19459	33530	50918	71066	93658	118318	144670	172338	244799	317259	383845	438679	475889	489599

FIG. 6-28

Approximate Capacities (U.S. Gallons) of Rectangular Tanks for Each Foot of Liquid*

Tank Width, ft	Tank Length, ft											
	0.5	1.0	1.5	2.0	2.5	3.0	3.5	4.0	4.5	5.0	5.5	6.0
1	3.74	7.48	11.22	14.96	18.70	22.44	26.18	29.92	33.66	37.40	41.14	44.88
2	7.48	14.96	22.44	29.92	37.40	44.88	52.36	59.84	67.32	74.81	82.29	89.77
3	11.22	22.44	33.66	44.88	56.10	67.32	78.55	89.77	100.99	112.21	123.43	134.65
4	14.96	29.92	44.88	59.84	74.81	89.77	104.73	119.69	134.65	149.61	164.57	179.53
5	18.70	37.40	56.10	74.81	93.51	112.21	130.91	149.61	168.31	187.01	205.71	224.42
6	22.44	44.88	67.32	89.77	112.21	134.65	157.09	179.53	201.97	224.42	246.86	269.30
7	26.18	52.36	78.55	104.73	130.91	157.09	183.27	209.45	235.64	261.82	288.00	314.18
8	29.92	59.84	89.77	119.69	149.61	179.53	209.45	239.38	269.30	299.22	329.14	359.06
Tank Width, ft	Tank Length, ft											
	6.5	7.0	7.5	8.0	8.5	9.0	9.5	10.0	10.5	11.0	11.5	12.0
1	48.62	52.36	56.10	59.84	63.58	67.32	71.06	74.81	78.55	82.29	86.03	89.77
2	97.25	104.73	112.21	119.69	127.17	134.65	142.13	149.61	157.09	164.57	172.05	179.53
3	145.87	157.09	168.31	179.53	190.75	201.97	213.19	224.42	235.64	246.86	258.08	269.30
4	194.49	209.45	224.42	239.38	254.34	269.30	284.26	299.22	314.18	329.14	344.10	359.07
5	243.12	261.82	280.52	299.22	317.92	336.62	355.32	374.03	392.73	411.43	430.13	448.83
6	291.74	314.18	336.62	359.06	381.51	403.95	426.39	448.83	471.27	493.71	516.16	538.60
7	340.36	366.55	392.73	418.91	445.09	471.27	497.45	523.64	549.82	576.00	602.18	628.36
8	388.99	418.91	448.83	478.75	508.68	538.60	568.52	598.44	628.36	658.29	688.21	718.13

1 cu ft = 7.4805 U.S. gal.

Total Volume = $W \bullet L \bullet H_T$ = cu ft

Partial Volume = $W \bullet L \bullet H_p$ = cu ft

* For imperial gallons, divide above capacities by 1.2

API Standard 2000
    Venting Atmospheric and Low-Pressure Storage Tanks.

API RP 12 RI
    Recommended Practice for Setting, Connecting, Maintenance and Operation of Lease Tanks.

API RP 50
    Recommended Gas Plant Good Operating Practices for Protection of Environment.

API RP 200
    Fire Protection for Refineries.

ASME Code for Unfired Pressure Vessels, Section VIII, Division I & II.

AWWA D-100
    Welded Tanks

AWWA D-103
    Bolted Tanks

BS7777
    Flat Bottomed, Vertical Cylindrical Tanks for Low Temperature Service.

Federal Register, Part 1910, Occupational Safety & Health Standards, Subpart D, Walking-Working Surfaces.

GPA North American Storage Capacity for Light Hydrocarbons and U.S. LP-Gas Import Terminals.

IOCC Underground Storage of Liquid Petroleum Hydrocarbons in the United States. (Interstate Oil Compact Commission.)

National Association of Corrosion Engineers.
    Item No. 51101 - Electrochemical Techniques for Corrosion.
    Item No. 52044 - Coatings and Linings for Immersion Service.

NACE - TPC Publication No. 5
    Corrosion Control in Petroleum Production.

National Board of Fire Underwriters (NBFU)

National Fire Protection Association (NFPA)
    No. 11, 30, and 20-26

REFERENCES

1. Blodbett, Omer W., *Design of Welded Structures,* James F. Lincoln Arc Welding Foundation, Cleveland, Ohio.
2. Kuman, J. and Jed Lieka, J. A., *Calculation & Shortcut Deskbook,* McGraw-Hill Publications, New York, New York.
3. Graphic Methods for Thermal Insulation, Johns-Manville Ken-Caryl Ranch, Denver, Colorado 80217.

BIBLIOGRAPHY

1. Nelson, W. L., Petroleum Refinery Engineering, 4th Edition, McGraw-Hill Book Co. (1958).
2. Oil Insurance Association Recommendations & Guidelines for Gasoline Plants - No. 301.
3. Perry, Robert H., *Perry's Chemical Engineer's Handbook,* 6th Edition, 1985.
4. Selby, Samuel M., *Standard Mathematical Tables*, 21st Edition, 1973.
5. Underwriters Laboratories (UL)
   No. 142 Steel Above Ground Tanks
   No. 58 Steel Underground Tanks

SECTION 7

Separation Equipment

PRINCIPLES OF SEPARATION

Three principles used to achieve physical separation of gas and liquids or solids are momentum, gravity settling, and coalescing. Any separator may employ one or more of these principles, but the fluid phases must be "immiscible" and have different densities for separation to occur.

FIG. 7-1

Nomenclature

A = area, ft^2
A_p = particle or droplet cross sectional area, ft^2
C = empirical constant for separator sizing, ft/hr
C^* = empirical constant for liquid-liquid separators, $(bbl \cdot cp)/(ft^2 \cdot day)$
C' = drag coefficient of particle, dimensionless (Fig. 7-3)
D_i = separator inlet nozzle diameter, in.
D_p = droplet diameter, ft
D_v = inside diameter of vessel, ft
G_m = maximum allowable gas mass-velocity necessary for particles of size D_p to drop or settle out of gas, $lb/(hr \cdot ft^2)$
g = acceleration due to gravity, 32.2 ft/sec^2
H_l = width of liquid interface area, ft
J = gas momentum, $lb/(ft \cdot sec^2)$
K = empirical constant for separator sizing, ft/sec
K_{CR} = proportionality constant from Fig. 7-5 for use in Eq 7-5, dimensionless
L = seam to seam length of vessel, ft
L_l = length of liquid interface area, ft
M = mass flow, lb/sec
M_p = mass of droplet or particle, lb
MW = molecular weight, lb/lb mole
P = system pressure, psia
Q = estimated gas flow capacity, MMscfd per ft^2 of filter area
Q_A = actual gas flow rate, ft^3/sec
R = gas constant, 10.73 $(psia \cdot ft^3)/(°R \cdot lb\ mole)$
Re = Reynolds number, dimensionless
S_{hl} = specific gravity of heavy liquid, water = 1.0
S_{ll} = specific gravity of light liquid, water = 1.0
T = system temperature, °R
t = retention time, minutes
U = volume of settling section, bbl
V_t = critical or terminal gas velocity necessary for particles of size D_p to drop or settle out of gas, ft/sec
W = total liquid flow rate, bbl/day
W_{cl} = flow rate of light condensate liquid, bbl/day
Z = compressibility factor, dimensionless

Greek:

ρ_g = gas phase density, lb/ft^3
ρ_l = liquid phase density, droplet or particle, lb/ft^3
μ = viscosity of continuous phase, cp

Filter Separators: A filter separator usually has two compartments. The first compartment contains filter-coalescing elements. As the gas flows through the elements, the liquid particles coalesce into larger droplets and when the droplets reach sufficient size, the gas flow causes them to flow out of the filter elements into the center core. The particles are then carried into the second compartment of the vessel (containing a vane-type or knitted wire mesh mist extractor) where the larger droplets are removed. A lower barrel or boot may be used for surge or storage of the removed liquid.

Flash Tank: A vessel used to separate the gas evolved from liquid flashed from a higher pressure to a lower pressure.

Line Drip: Typically used in pipelines with very high gas-to-liquid ratios to remove only free liquid from a gas stream, and not necessarily all the liquid. Line drips provide a place for free liquids to separate and accumulate.

Liquid-Liquid Separators: Two immiscible liquid phases can be separated using the same principles as for gas and liquid separators. Liquid-liquid separators are fundamentally the same as gas-liquid separators except that they must be designed for much lower velocities. Because the difference in density between two liquids is less than between gas and liquid, separation is more difficult.

Scrubber or Knockout: A vessel designed to handle streams with high gas-to-liquid ratios. The liquid is generally entrained as mist in the gas or is free-flowing along the pipe wall. These vessels usually have a small liquid collection section. The terms are often used interchangeably.

Separator: A vessel used to separate a mixed-phase stream into gas and liquid phases that are "relatively" free of each other. Other terms used are scrubbers, knockouts, line-drips, and decanters.

Slug Catcher: A particular separator design able to absorb sustained in-flow of large liquid volumes at irregular intervals. Usually found on gas gathering systems or other two-phase pipeline systems. A slug catcher may be a single large vessel or a manifolded system of pipes.

Three Phase Separator: A vessel used to separate gas and two immiscible liquids of different densities (e.g. gas, water, and oil).

Gravity Settling

Liquid droplets will settle out of a gas phase if the gravitational force acting on the droplet is greater than the drag force of the gas flowing around the droplet (see Fig. 7-2). These forces can be described mathematically using the terminal or finite-settling velocity calculation, Eq 7-1. The nomenclature for all equations in this section and terminology used are listed in Fig. 7-1.

FIG. 7-2

Forces on Liquid Droplet in Gas Stream

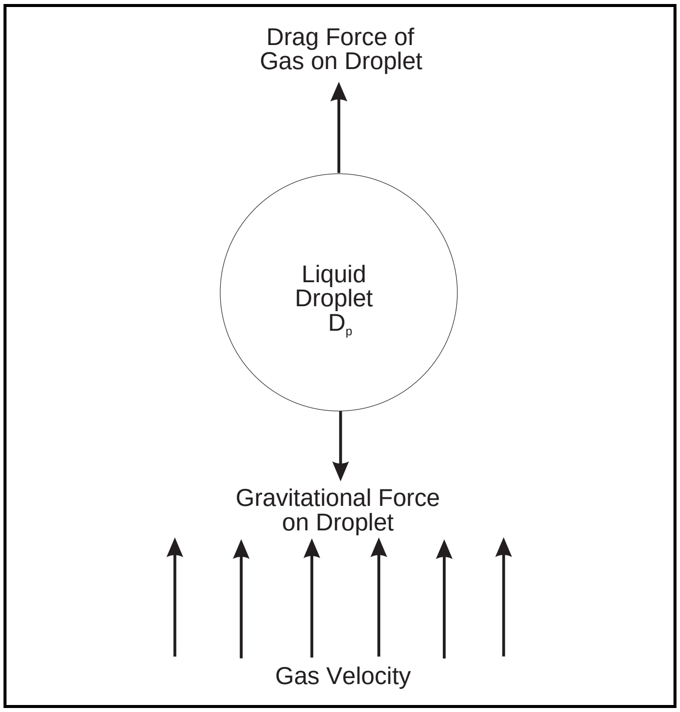

$$V_t = \sqrt{\frac{2\, g\, M_p\, (\rho_l - \rho_g)}{\rho_l\, \rho_g\, A_p\, C'}} = \sqrt{\frac{4\, g\, D_p\, (\rho_l - \rho_g)}{3\, \rho_g\, C'}} \qquad \textbf{Eq 7-1}$$

The drag coefficient has been found to be a function of the shape of the particle and the Reynolds number of the flowing gas. For the purpose of this equation, particle shape is considered to be a solid, rigid sphere. The Reynolds number is defined as:

$$\text{Re} = \frac{1{,}488\, D_p\, V_t\, \rho_g}{\mu} \qquad \textbf{Eq 7-2}$$

Fig. 7-3 shows the relationship between drag coefficient and particle Reynolds number for spherical particles.

In this form, a trial and error solution is required since both particle size (D_p) and terminal velocity (V_t) are involved. To avoid trial and error, values of the drag coefficient are presented in Fig. 7-4 as a function of the product of drag coefficient (C') times the Reynolds number squared; this technique eliminates velocity from the expression.[1] The abscissa of Fig. 7-4 is given by:

$$C'\, (\text{Re})^2 = \frac{(0.95)\, (10^8)\, \rho_g\, D_p^3\, (\rho_l - \rho_g)}{\mu^2} \qquad \textbf{Eq 7-3}$$

As with other fluid flow phenomena, the gravity settling drag coefficient reaches a limiting value at high Reynolds numbers.

As an alternative to using Eq 7-3 and Fig. 7-4, the following approach is commonly used.

The curve shown in Fig. 7-3 can be simplified into three sections from which curve-fit approximations of the C' vs Re curve can be derived. When these expressions for C' vs Re are substituted into Eq 7-1, three settling laws are obtained as described below.

FIG. 7-3

Drag Coefficient and Reynolds Number for Spherical Particles[1]

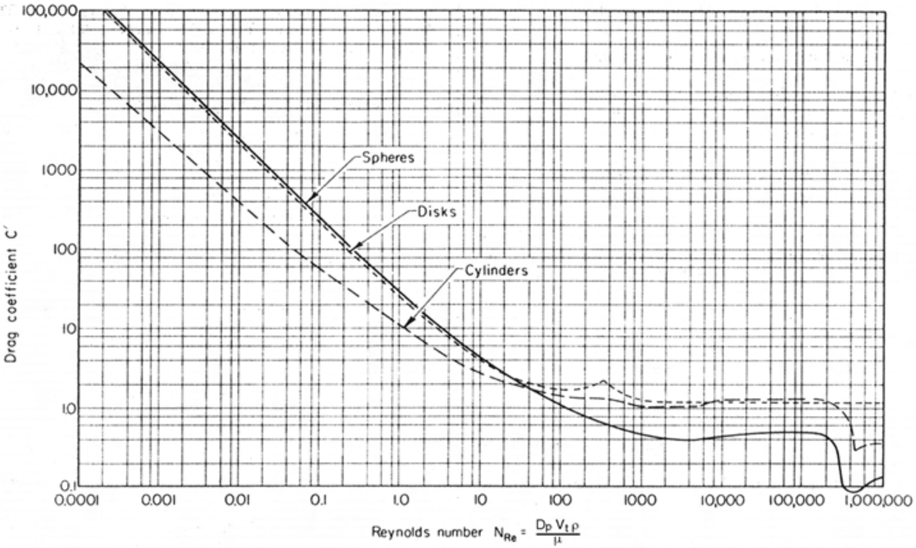

Reproduced with Permission of The McGraw-Hill Companies

FIG. 7-4

Drag Coefficient of Rigid Spheres[2]

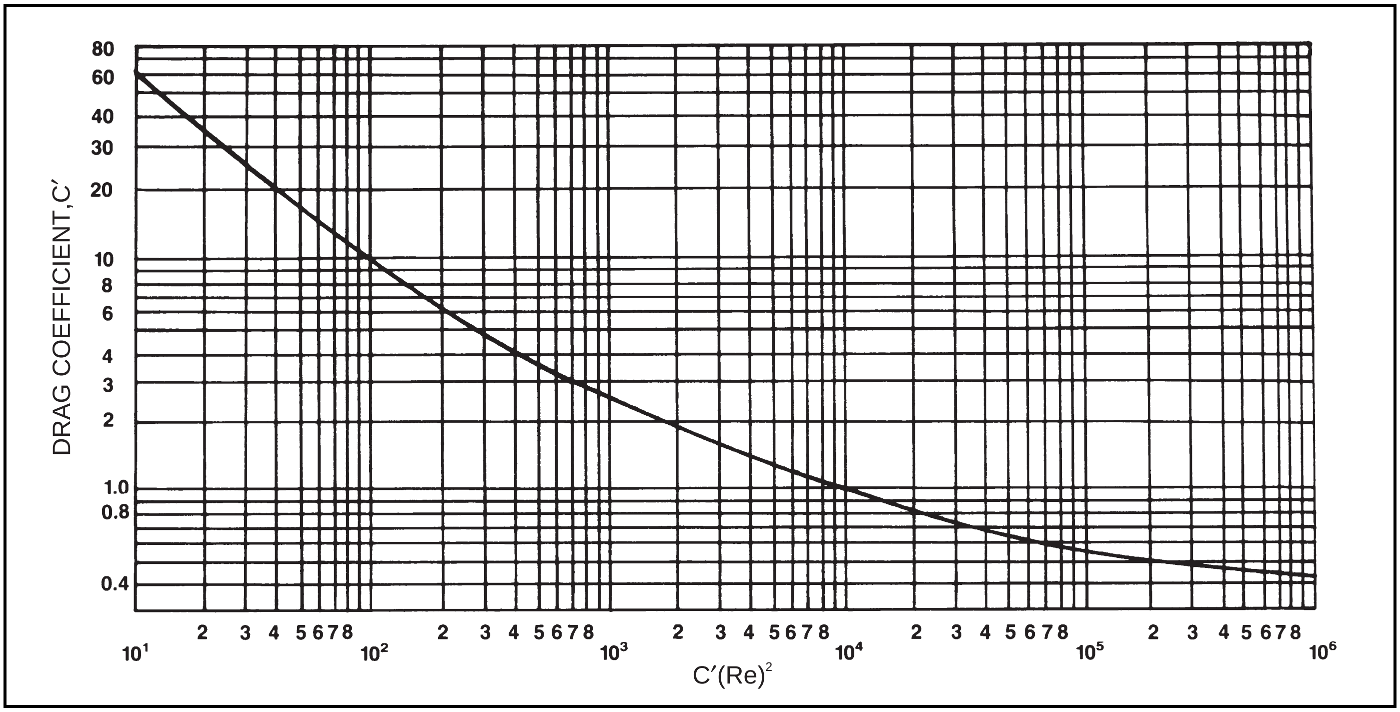

Stoke's Law

At low Reynolds numbers (less than 2), a linear relationship exists between the drag coefficient and the Reynolds number (corresponding to laminar flow). Stoke's Law applies in this case and Eq 7-1 can be expressed as:

$$V_t = \frac{1{,}488\ g\ D_p^2\ (\rho_l - \rho_g)}{18\ \mu} \qquad \textbf{Eq 7-4}$$

The droplet diameter corresponding to a Reynolds number of 2 can be found using a value of 0.025 for K_{CR} in Eq 7-5.

$$D_p = K_{CR}\left[\frac{\mu^2}{g\ \rho_g\ (\rho_l - \rho_g)}\right]^{0.33} \qquad \textbf{Eq 7-5}$$

A summary of these equations is presented in Fig. 7-5, which also provides general information regarding droplet sizes and collection equipment selection guidelines.

By inspection of the particle Reynolds number equation (Eq 7-2) it can be seen that Stoke's law is typically applicable for small droplet sizes and/or relatively high viscosity liquid phases.

Intermediate Law

For Reynold's numbers between 2 and 500, the Intermediate Law applies, and the terminal settling law can be expressed as:

$$V_t = \frac{3.49\ g^{0.71}\ D_p^{1.14}\ (\rho_l - \rho_g)^{0.71}}{\rho_g^{0.29}\ \mu^{0.43}} \qquad \textbf{Eq 7-6}$$

The droplet diameter corresponding to a Reynolds number of 500 can be found using a value of 0.334 for K_{CR} in Eq 7-5.

The intermediate law is usually valid for many of the gas-liquid and liquid-liquid droplet settling applications encountered in the gas business.

Newton's Law

Newton's Law is applicable for a Reynold's number range of approximately 500 – 200,000, and finds applicability mainly for separation of large droplets or particles from a gas phase, e.g. flare knockout drum sizing. The limiting drag coefficient is approximately 0.44 at Reynolds numbers above about 500. Substituting C′ = 0.44 in Eq 7-1 produces the Newton's Law equation expressed as:

$$V_t = 1.74\sqrt{\frac{g\ D_p\ (\rho_l - \rho_g)}{\rho_g}} \qquad \textbf{Eq 7-7}$$

An upper limit to Newton's Law is where the droplet size is so large that it requires a terminal velocity of such magnitude that excessive turbulence is created. For the Newton's Law region, the upper limit to the Reynolds number is 200,000 and K_{CR} = 18.13.

DROPLET SIZE DISTRIBUTIONS AND ENTRAINMENT LOADINGS

Liquid Drop Sizes in Gas-Liquid Systems

The gravity settling theory above provides valuable insight into the significance of certain physical properties and the physics that together influence the separation of dispersed droplets from a continuous phase, e.g. liquid droplets from a gas or liquid droplets of a specific density from a liquid phase of another density. However, a couple of problems remain:

- Determination of the actual droplet sizes that need to be dealt with.
- Determination of the amount of entrained liquid in droplet form.

FIG. 7-5

Gravity Settling Laws and Particle Characteristics

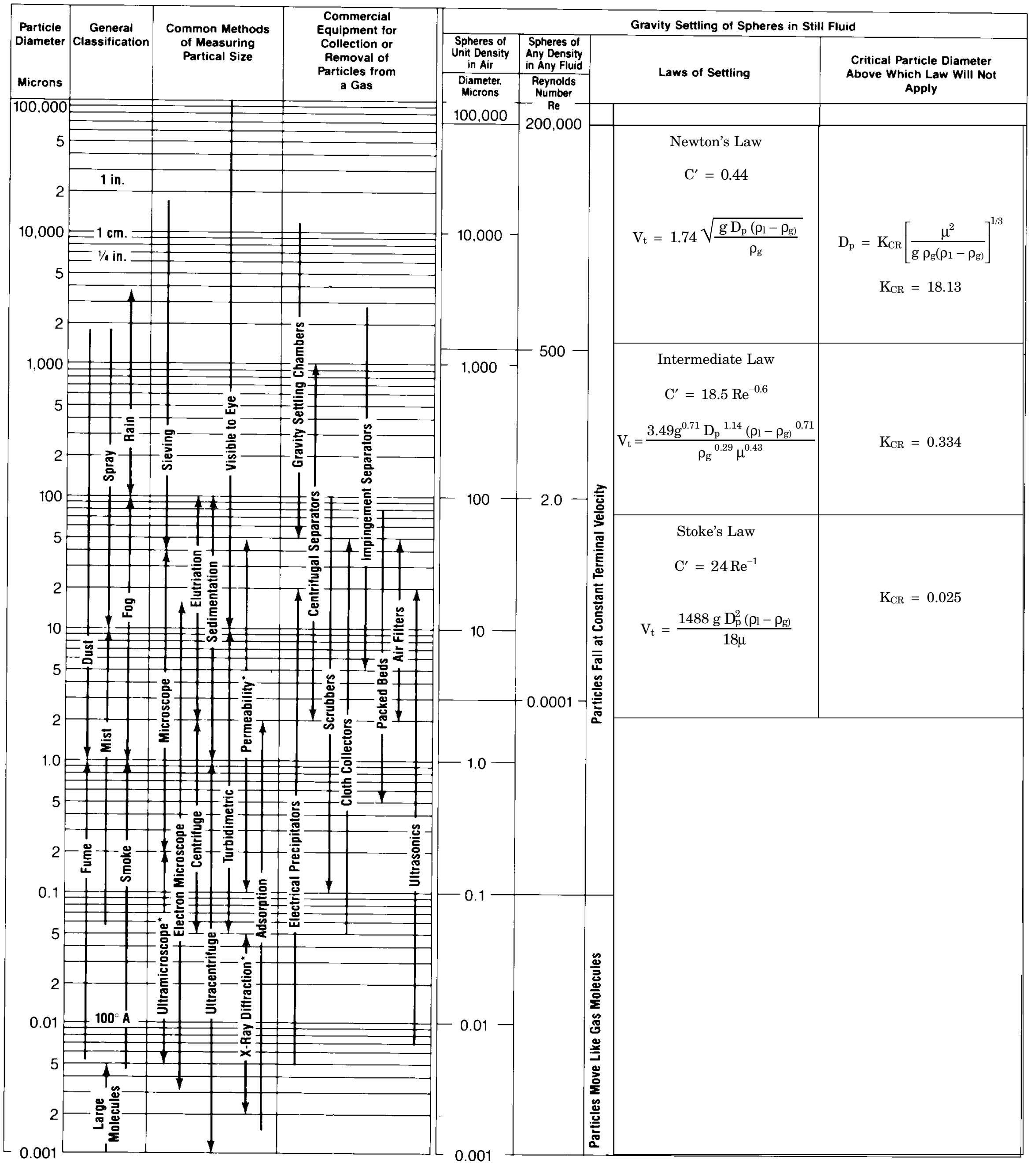

Adapted From Ref. 7-3

These issues apply to both gas-liquid and liquid-liquid separations.

Neither of these are subject to precise calculation and yet equipment separation performance is dependent on both. As a result, the sizing of separation equipment, vapor-liquid and liquid-liquid, is still largely based on empirical methods. While progress is being made in this area, there is some way to go before droplet size distribution and entrainment loading prediction will be fully incorporated into separation equipment sizing procedures. Fig. 7-6 provides an indication of typical drop size distributions for various gas-liquid systems.

TYPES OF SEPARATORS

Separators are usually characterized by orientation as vertical or horizontal. They may be further classified as two-phase (gas-liquid) or three-phase (gas-liquid-liquid). Horizontal separators can be single- or double-barrel and can be equipped with sumps or boots.

Parts of a Separator

Regardless of shape, separation vessels usually contain four major sections plus the necessary controls. These sections are shown for horizontal and vertical vessels in Fig. 7-7. The inlet device (A) is used to reduce the momentum of the inlet flow stream, perform an initial bulk separation of the gas and liquid phases, and enhance gas flow distribution. There are a variety of inlet devices available and these are discussed in more detail in a later section.

The gas gravity separation section (B) is designed to utilize the force of gravity to separate entrained liquid droplets from the gas phase, preconditioning the gas for final polishing by the mist extractor. It consists of a portion of the vessel through which the gas moves at a relatively low velocity with little turbulence. In some horizontal designs, straightening vanes are used to reduce turbulence. The vanes also act as droplet coalescers, which reduces the horizontal length required for droplet removal from the gas stream.

The liquid gravity separation section (C) acts as a receiver for all liquid removed from the gas in the inlet, gas gravity, and mist extraction sections. In two-phase separation applications, the liquid gravity separation section provides residence time for degassing the liquid. In three-phase separation applications the liquid gravity section also provides residence time to allow for separation of water droplets from a lighter hydrocarbon liquid phase and vice-versa. Depending on the inlet flow characteristics, the liquid section should have a certain amount of surge volume, or slug catching capacity, in order to smooth out the flow passed on to downstream equipment or processes. Efficient degassing may require a horizontal separator while emulsion separation may also require higher temperature, use of electrostatic fields, and/or the addition of a demulsifier. Coalescing packs are sometimes used to promote hydrocarbon liquid – water separation, though they should not be used in applications that are prone to plugging, e.g. wax, sand, etc.

FIG. 7-6

Typical Partical Size Distribution Ranges From Entrainment Caused By Various Mechanisms

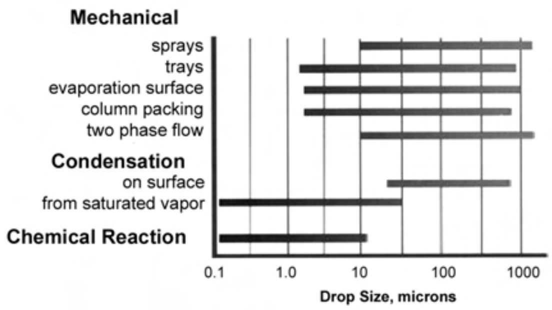

Courtesy Koch-Otto York

FIG. 7-7

Gas-Liquid Separators

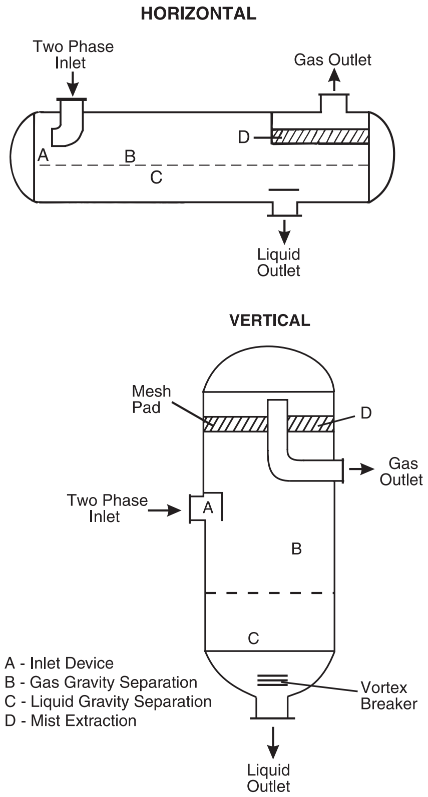

The mist extraction section (D) utilizes a mist extractor that can consist of a knitted wire mesh pad, a series of vanes, or cyclone tubes. This section removes the very small droplets of liquid from the gas by impingement on a surface where they coalesce into larger droplets or liquid films, enabling separation from the gas phase. Quoted liquid carryover from the various types of mist extraction devices are usually in the range of 0.1 - 1 gal/MMscf.

Separator Configurations

Factors to be considered for separator configuration selection include:

- What separation quality is required by downstream equipment and processes?
- How well will extraneous material (e.g. sand, mud, corrosion products) be handled?

- How much plot space will be required?
- Will the separator be too tall for transport if skidded?
- Is there enough interface surface for 3-phase separation (e.g. gas/hydrocarbon/glycol liquid)?
- Can heating coils or sand jets be incorporated if required?
- How much surface area is available for degassing of separated liquid?
- Must surges in liquid flow be handled without large changes in level?
- Is large liquid retention volume necessary?
- What are the heat retention requirements (e.g. freeze protection)?

Vertical Separators

Vertical separators, shown in Fig. 7-8, are usually selected when the gas-liquid ratio is high or total gas volumes are low. In a vertical separator, the fluids enter the vessel through an inlet device whose primary objectives are to achieve efficient bulk separation of liquid from the gas and to improve flow distribution of both phases through the separator. Liquid removed by the inlet device is directed to the bottom of the vessel. The gas moves upward, usually passing through a mist extractor to remove any small entrained liquid droplets, and then the vapor phase flows out of the vessel. Liquid removed by the mist extractor is coalesced into larger droplets that then fall through the gas to the liquid reservoir in the bottom. The ability to handle liquid slugs is typically obtained by increasing vessel height to accommodate additional surge volume. Level control is normally not highly critical and liquid level can fluctuate several inches without affecting the separation performance or capacity of the vessel. Except for knockout drum applications, mist extractors are normally used to achieve a low liquid content in the separated gas in vessels of reasonable diameter.

Typical vertical separator L/D ratios are normally in the 2–4 range.

As an example of a vertical separator, consider a compressor suction scrubber. In this service the vertical separator:

- Does not need significant liquid retention volume
- A properly designed liquid level control loop responds quickly to any liquid that enters, thus avoiding tripping an alarm or shutdown
- The separator occupies a small amount of plot space

Horizontal Separators

Horizontal separators are most efficient when large volumes of liquid are involved. They are also generally preferred for three-phase separation applications. In a horizontal separator, shown in Fig. 7-9, the liquid that has been separated from the gas moves along the bottom of the vessel to the liquid outlet. The gas and liquid occupy their proportionate shares of the shell cross-section. Increased slug capacity is obtained through shortened retention time and increased liquid level. Fig. 7-9 also illustrates the separation of two liquid phases (glycol and hydrocarbon). The denser glycol settles to the bottom and is withdrawn through the boot. The glycol level is controlled by an interface level control instrument.

Horizontal separators have certain advantages with respect to gravity separation performance in that the liquid droplets or gas bubbles are moving perpendicular to the bulk phase velocity, rather than directly against it as in vertical flow, which makes separation easier.

FIG. 7-8

Vertical Separator with Wire Mesh Mist Extractor

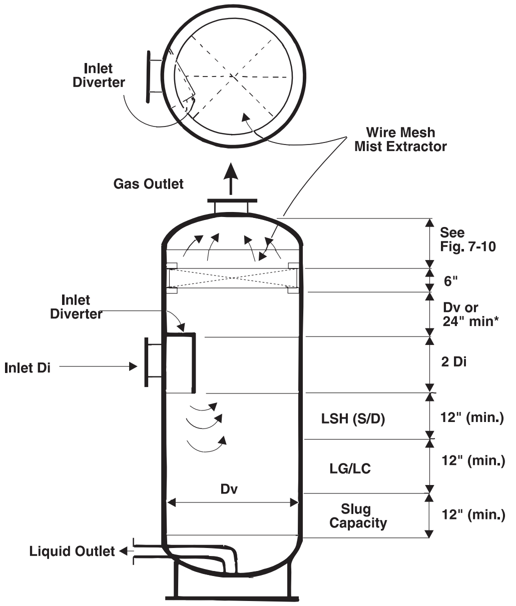

LSH (S/D) Level Switch High (Shutdown)
LG/LC Level Gauge/Level Controller

- Dimensions may be influenced by instrument connection requirements.
- For small diameter separators (≤ 48 inch ID.) with high L/G inlet flow ratios this dimension should be increased by as much as 50%.
- May use syphon type drain to:
  A. reduce vortex possibility
  B. reduce external piping that requires heating (freeze protection)

In a double-barrel separator, the liquids fall through connecting flow pipes into the external liquid reservoir below. Slightly smaller vessels may be possible with the double-barrel horizontal separator, where surge capacity establishes the size of the lower liquid collection chamber.

Typical L/D ratios for horizontal separators normally fall in the range of 2.5–5.

As an example of a horizontal separator, consider a rich amine flash tank. In this service:

- There is relatively large liquid surge volume required for longer retention time. This allows more complete release of the dissolved gas and, if necessary, surge volume for the circulating system.
- There is more surface area per liquid volume to aid in more complete degassing.
- The horizontal configuration handles a foaming liquid better than vertical.
- The liquid level responds slowly to changes in liquid inventory, providing steady flow to downstream equipment.

FIG. 7-9

Horizontal Three-Phase Separator with Wire Mesh Mist Extractor

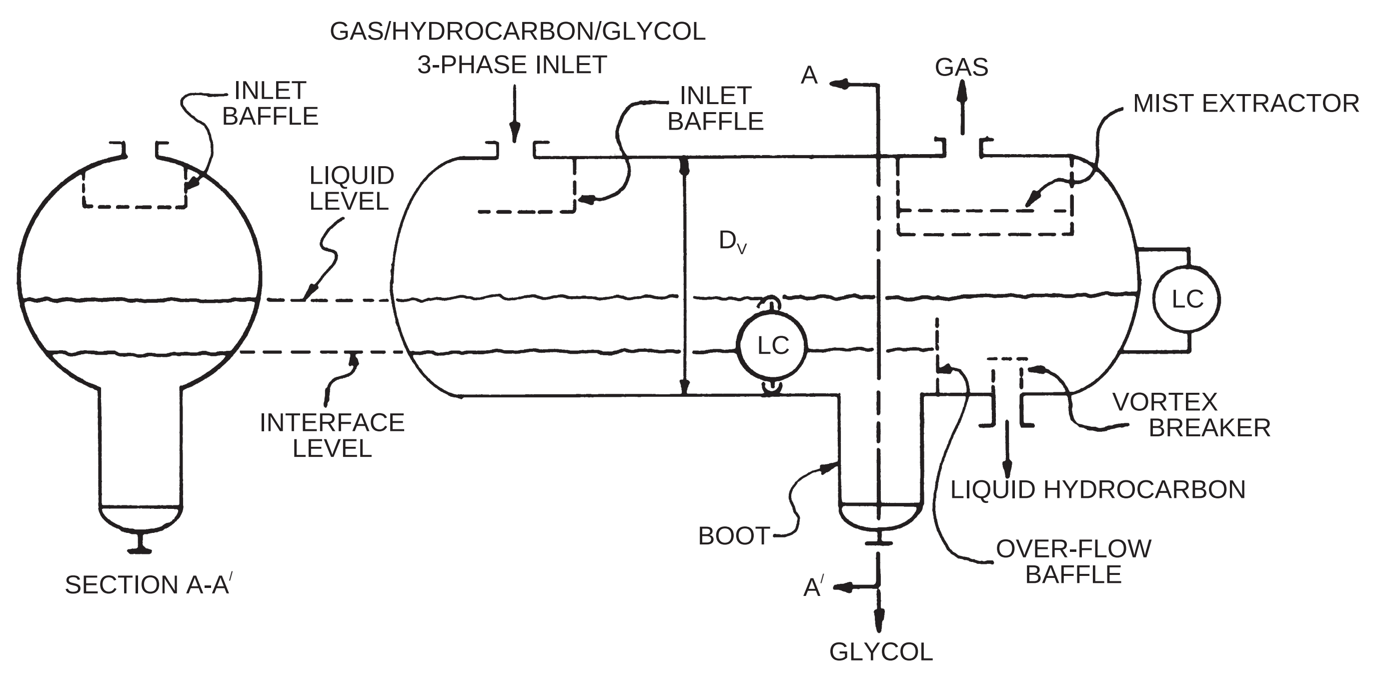

VESSEL INTERNALS

Inlet Devices

The importance of the inlet device with respect to separation performance has been identified only relatively recently, mainly through the use of Computational Fluid Dynamics (CFD) modeling. The main functions of the inlet device are:

- Reduce the momentum of the inlet stream and enhance flow distribution of the gas and liquid phases.
- Efficient separation of the bulk liquid phase.
- Prevent droplet shattering and re-entrainment of bulk liquid phase.

There are several different types of separator inlet devices that are commonly used:

- no inlet device
- diverter plate
- half-pipe
- vane-type
- cyclonic

In addition to the inlet device itself, it has been determined that the inlet piping configuration is also important. The vane-type and cyclonic inlet devices generally provide improved separation performance compared to the others. The separator/inlet device manufacturer should be contacted for specific design/performance details.

Mist Extraction Equipment

Mist extractors are used to separate the small liquid droplets from the gas phase that were not removed by the inlet device or gas gravity settling section (main "body") of the separator. These droplets are typically less than 150–500 micron in size and usually much smaller. It is generally not economic to separate these droplets by gravity alone by making the separator larger. The different types of mist extractors use principles other than simple droplet settling by gravity to achieve efficient removal of small droplets.

Wire-Mesh

Wire-mesh mist extractors, or pads, are made by knitting wire, metal or plastic, into tightly packed layers which are then crimped and stacked to achieve the required pad thickness. If removal of very small droplets, i.e. less than 10 micron, is required, much finer fibers may be interwoven with the primary mesh to produce a co-knit pad. Mesh pads remove liquid droplets mainly by impingement of droplets onto the wires and/or co-knit fibers followed by coalescence into droplets large enough to disengage from the bottom of the pad and drop through the rising gas flow into the liquid holding part of the separator. Mesh pads are not recommended for dirty or fouling service as they tend to plug easily. Wire mesh pads are normally installed horizontally with gas flow vertically upwards through the pad. Performance is adversely affected if the pad is tilted more than 30 degrees from the horizontal.[4] Problems have been encountered where liquid flow through the pad to the sump is impaired due to dirt or sludge accumulation, causing a higher liquid level on one side. This provides the serious potential of the pad being dislodged from its mounting brackets, making it useless or forcing parts of it into the outlet pipe. Firmly secure the top and bottom of the pad so that it is not dislodged by high gas flows, such as when a pressure relief valve lifts or during an emergency blowdown situation. Figures 7-10 and 7-11 illustrate typical wire mesh installations in vertical and horizontal vessels.

Most installations will use a 6-inch thick pad with 9-12 lb/ft^3 bulk density. Minimum recommended pad thickness is 4 inches[4]. Manufacturers should be contacted for specific designs.

Separation Performance — There are two main aspects to mesh pad separation performance.

- droplet removal efficiency
- gas handling capacity

Droplet removal efficiency is typically given by the manufacturer as a curve showing % removal as a function of droplet size at design flow and a nominal liquid loading. These curves are usually based on tests of an air-water system at atmospheric pressure.

The gas capacity of mesh pads is almost universally specified by a load or sizing factor, K, as utilized in the Souders and Brown[5] equation given below:

$$V_t = K\sqrt{\frac{\rho_l - \rho_g}{\rho_g}} \qquad \textbf{Eq 7-8}$$

The required mist extractor area is obtained from

$$A = \frac{Q_A}{V_t} \qquad \textbf{Eq 7-9}$$

The design K value provides a certain degree of margin before liquid entrainment/carryover becomes excessive. Efficiency and capacity are normally inversely related, i.e. as droplet removal efficiency increases, allowable gas throughput decreases.

Because normal pressure drops across mesh pads are so low (less than 1 inch of water) this is not typically a major area of concern in gas processing operations. Fig. 7-12 provides a summary of performance parameters.

The K capacity factor for mesh pads is often derated for higher pressure operation, Fig. 7-13. All factors being equal, this is normally due to the reduction in surface tension of the liquid phase that occurs with increasing pressure.

Mesh pads normally operate efficiently over a range of 30–110% of the design gas rate.

The gas capacity of a wire-mesh pad is typically defined in terms of a K "constant" as given in Fig. 7-12. This is an oversimplification. Among other things, K is also a function of the amount of entrained liquid reaching the mesh pad. As would be expected, K decreases with increasing inlet liquid loading. For typical mesh pad designs, liquid loads greater than 1 gpm/ft^2 are considered high and will require deration of the standard K factor, to prevent excessive entrainment carryover. However, per the earlier discussion on droplet size distributions, it is difficult to predict what the inlet liquid loading reaching the mist extractor will be for a given separator application.

Vane

Vane or chevron-type mist extractors (vane-pack) use relatively closely spaced blades arranged to provide sinusoidal or zig-zag gas flow paths. The changes in gas flow direction com-

FIG. 7-10

Minimum Clearance — Mesh Type Mist Eliminators

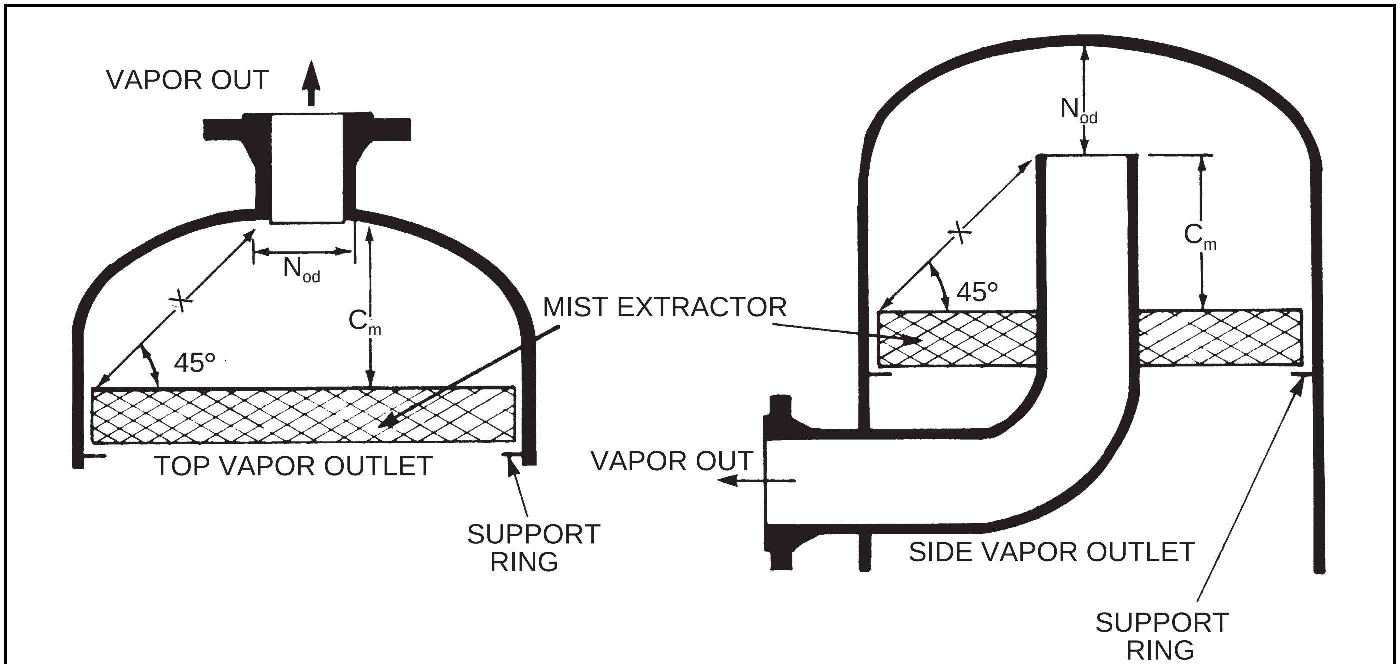

MINIMUM EXTRACTOR CLEARANCE, C_m:

$$C_m = 0.707\,X \text{ or } \frac{M_{od} - N_{od}}{2}$$

WHERE:
M_{od} = MIST EXTRACTOR OUTSIDE DIAMETER
N_{od} = NOZZLE OUTSIDE DIAMETER

FIG. 7-11

Horizontal Separator with Knitted Wire Mesh Pad Mist Extractor and Lower Liquid Barrel

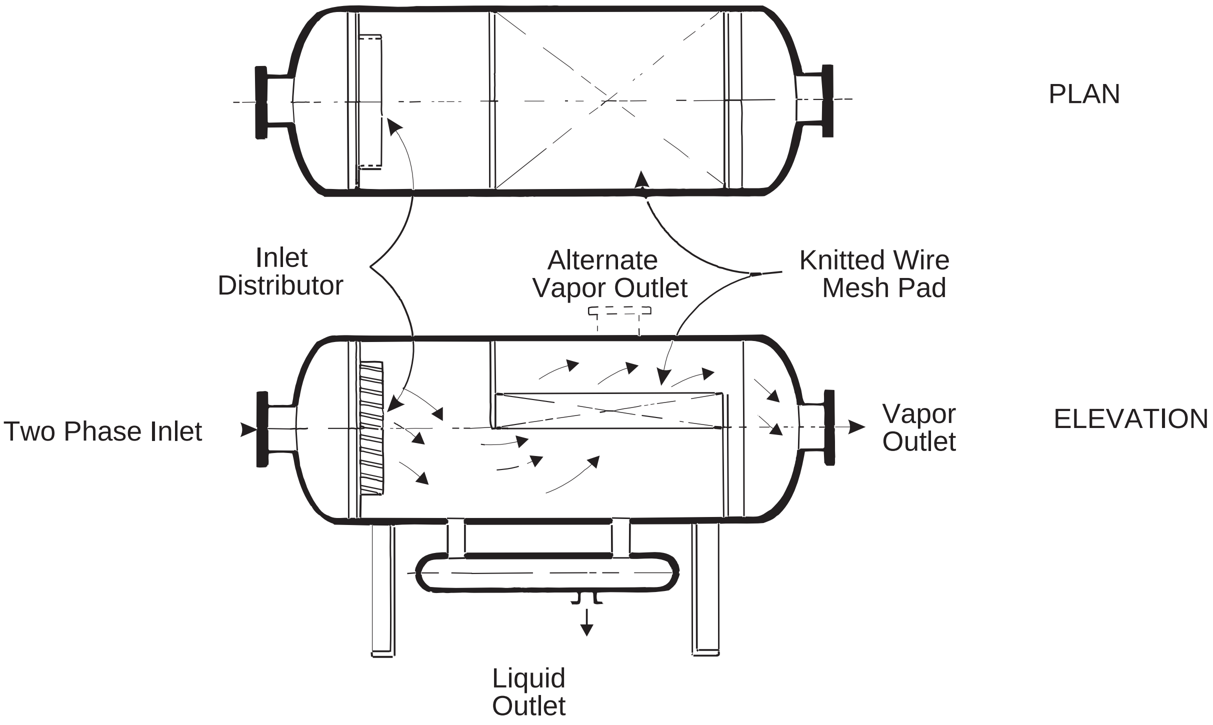

FIG. 7-12

Mesh Pad Separation Performance

Droplet removal efficiency:	99–99.5% removal of 3–10 micron droplets. Higher removal efficiency is for denser, thicker pads and/or smaller wire/co-knit fiber diameter.
Gas capacity, K, ft/sec	0.22–0.39. Generally, the lower capacities correspond to the mesh pad designs with the highest droplet removal efficiencies.

FIG. 7-13

Adjustment of K Factor for Pressure[6]

Pressure, psig	Percent of Design Value
Atmospheric	100
150	90
300	85
600	80
1,150	75

bined with the inertia of the entrained liquid droplets, cause impingement of the droplets onto the plate surface, followed by coalescence and drainage of the liquid to the liquid collection section of the separator. Fig. 7-14 shows a typical vane-type mist extractor. Vane packs may be installed in either horizontal or vertical orientations, though capacity is typically reduced significantly for vertical upflow applications. Recently developed hollow vane designs with interconnected liquid drainage passages are capable of high gas handling capacities in a vertical upflow orientation. Vanes differ from wire mesh pads in that they typically do not drain the separated liquid back through the rising gas stream. Rather, the liquid can be routed into a downcomer that carries the fluid directly to the liquid holding section of the separator. Vane packs are better suited to dirty or fouling service as they are less likely to plug due to their relatively large flow passages. A vertical separator with a typical vane mist extractor is shown in Fig. 7-15.

A number of different vane pack designs are available. Pack thicknesses are generally in the range of 6–12 inches. Vanes are usually arranged in a zig-zag or sinusoidal pattern, with vane spacings of 1–1.5 inches typical. Vane types include no-pocket, single-pocket and double-pocket styles.

Separation Performance— As for mesh pads, the key performance parameters are droplet removal efficiency and gas handling capacity. Eq 7-8 and the load/sizing factor K, can also be utilized for calculating the capacity of vane-type mist extractors. Fig. 7-16 provides a summary of performance parameters.

Vane packs typically have pressure drops in the range of 0.5–3.5 inches of water.

FIG. 7-14

Cross-Section of Vane Element Mist Extractor Showing Corrugated Plates with Liquid Drainage Traps

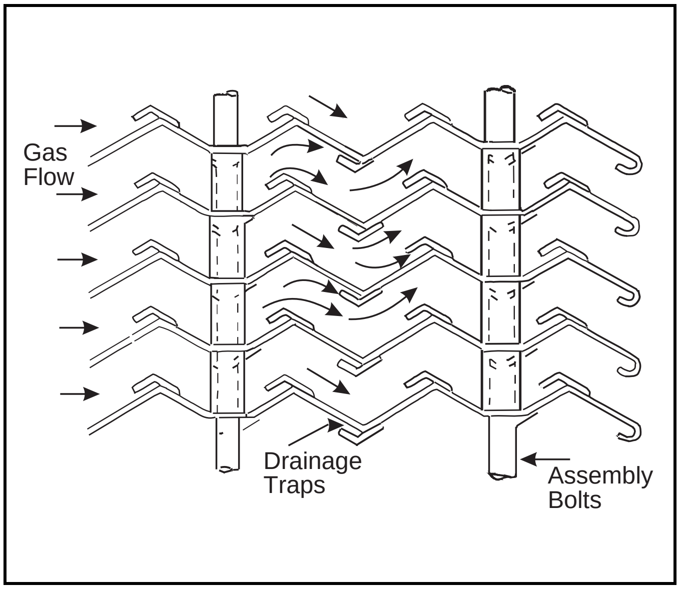

FIG. 7-15

Vertical Separator with Vane-Type Mist Extractor

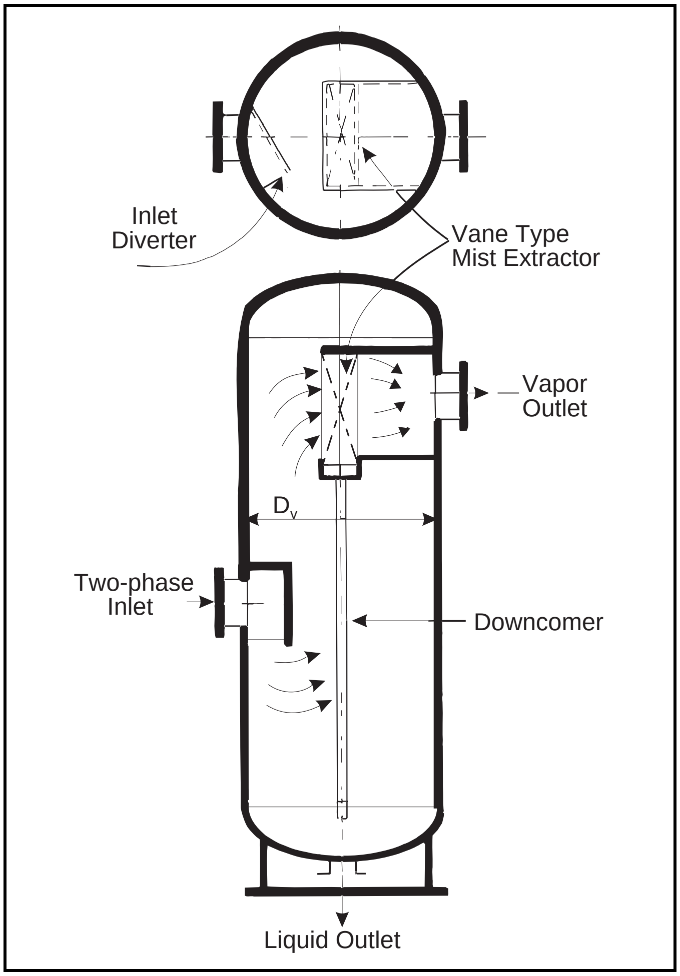

As for wire mesh extractors, the droplet removal efficiencies quoted above for vane-type units are typically based on tests performed on air-water systems at atmospheric pressure. Testing has shown that for mesh type extractors, the low pressure air-water droplet removal efficiency results correlate reasonably well to higher pressure gas-hydrocarbon liquid systems. Vane packs on the other hand show a drop-off of removal efficiency as pressure increases. This is primarily a result of the decreasing allowable gas velocity with increasing pressure caused mainly by increased gas density. As gas velocity decreases, droplet inertia decreases and the droplets tend to follow the gas streamlines more easily through the vane passages, and exit the vane pack without being captured. Mesh pads also rely on velocity/droplet inertia to remove liquid droplets via impingement but they are less susceptible to capture efficiency reduction than vane packs because mesh pads have far more collection "targets", i.e. wire/fiber filaments.

Turndown is generally more of an issue with vane-packs, with droplet removal efficiency decreasing measurably as velocity decreases from design.

Vane-type mist extractors are also impacted by inlet liquid loading, but generally have considerably more tolerance towards liquids than mesh-pads. The manufacturer should be contacted for specific designs and applications.

FIG. 7-16

Typical Vane Pack Separation Performance

Droplet removal efficiency:	99% removal of droplets greater than 10–40 microns. Higher removal efficiency is for thicker packs, with closer vane spacings and more passes (bends).
Gas capacity, K, ft/sec	Horizontal flow: 0.9–1.0 Vertical up-flow: 0.4–0.5 The higher capacities are generally associated with pocketed vane designs.

Cyclonic

There are several types of centrifugal separators that serve to separate entrained liquids, and solids if present, from a gas stream. For mist extraction applications, reverse-flow, axial-flow and recycling axial-flow cyclones are typically used in multi-cyclone "bundles." Cyclonic mist extractors use centrifugal force to separate solids and liquid droplets from the gas phase based on density difference. Very high G forces are achieved which allows for efficient removal of small droplet sizes. The main advantage of cyclonic mist extractors is that they provide good removal efficiency at very high gas capacity. This generally allows for the smallest possible vessel diameter for a given gas flow. Cyclonic mist extractors are often used in low liquid load gas scrubbing applications, and for high pressure gas-liquid separation. These devices are proprietary and cannot be readily sized without detailed knowledge of the characteristics of the specific internals. The manufacturer of such devices should be consulted for assistance in sizing these types of separators. A typical centrifugal separator is shown in Fig. 7-17. Disadvantages of centrifugal separators are:

FIG. 7-17

Vertical Separator with Centrifugal Elements

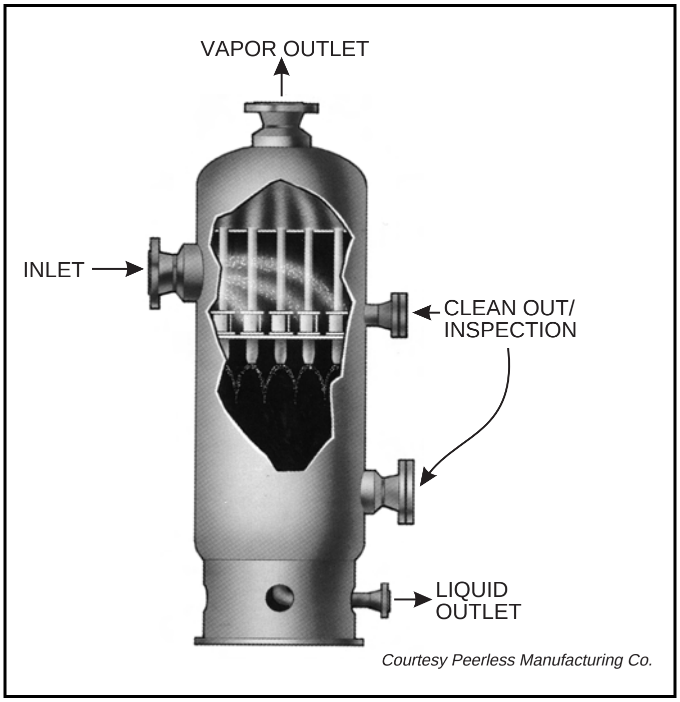

Courtesy Peerless Manufacturing Co.

- Some designs do not handles slugs well
- Pressure drop tends to be significantly higher than for vane or clean-knitted mesh mist extractors
- They have a relatively narrow operating flow range for highest efficiency

Separation Performance — As stated, the selection and design of de-misting cyclone bundles should be left to the manufacturers. While not a correct representation of the separation physics employed by cyclonic devices, the familiar K factor as used in Eq 7-8 can be used to provide indicative gas capacity for a multicyclone mist extractor. K factors will tend to range from 1 ft/sec for reverse flow multicyclones to 3 ft/sec or higher for the newest recycling axial-flow multicyclones. The liquid handling capacity of a multicyclone bundle is typically somewhat higher than that for vane-type mist extractors. The gas capacity factor, K, is based on the multicyclone bundle cross-sectional area, assuming 2 inch cyclone tubes and typical cyclone–cyclone pitch dimensions and layout arrangement.

GAS-LIQUID SEPARATOR SIZING

Specifying Separators

Separator designers need to know pressure, temperature, flow rates, and physical properties of the streams as well as the degree of separation required. It is also prudent to define if these conditions all occur at the same time or if there are only certain combinations that can exist at any time. If known, the type and amount of liquid should also be given, and whether it is mist, free liquid, or slugs.

For example, a compressor suction scrubber designed for 70-150 MMscfd gas at 400-600 psig and 65-105°F would require a unit sized for the worse conditions, i.e. 150 MMscfd at 400 psig and 105°F. But if the real throughput of the compressor varies from 150 MMscfd at 600 psig, 105°F to 70 MMscfd at 400 psig, 65°F then a smaller separator is acceptable because the high volume only occurs at the high pressure.

An improperly sized separator is one of the leading causes of process and equipment problems. Inlet separation problems upstream of absorption systems (e.g. amine and glycol) can lead to foaming problems, and upstream of adsorption systems (e.g. molecular sieve, activated alumina, and silica gel) can cause fouling, coking, and other damage to the bed. Equipment such as compressors and turbo-expanders tolerate little or no liquid in the inlet gas steam, while pumps and control valves may have significant erosion and/or cavitation when vapors are present due to improper separation. In addition, direct-fired reboilers in amine and glycol service may experience tube failures due to hot spots caused by salt deposits caused by produced water carryover into the feed gas.

Design Approach

There is as much art as there is science to properly design a separator. Three main factors should be considered in separator sizing: 1) vapor capacity, 2) liquid capacity, and 3) operability. The vapor capacity will determine the cross-sectional area necessary for gravitational forces to remove the liquid from the vapor. The liquid capacity is typically set by determining the volume required to provide adequate residence time to “de-gas” the liquid or allow immiscible liquid phases to separate. Operability issues include the separator’s ability to deal with solids if present, unsteady flow/liquid slugs, turndown, etc. Finally, the optimal design will usually result in an aspect ratio that satisfies these requirements in a vessel of reasonable cost. These factors often result in an iterative approach to the calculations.

VAPOR HANDLING

Separators without Mist Extractors

Separators without mist extractors are not frequently utilized. The most common application of a vapor-liquid separator that does not use a mist extractor is a flare knockout drum. Mist extractors are rarely used in flare knockout drums because of the potential for plugging and the serious implications this would have for pressure relief. is typically a horizontal vessel that utilizes gravity as the sole mechanism for separating the liquid and gas phases. Gas and liquid enter through the inlet nozzle and are slowed to a velocity such that the liquid droplets can fall out of the gas phase. The dry gas passes into the outlet nozzle and the liquid is drained from the lower section of the vessel.

To design a separator without a mist extractor, the minimum size diameter droplet to be removed must be set. Typically this diameter is in the range of 300 to 2,000 microns (1 micron = 10^{-4} cm or 0.00003937 inch).

The length of the vessel required can then be calculated by assuming that the time for the gas flow from inlet to outlet is the same as the time for the liquid droplet of size D_p to fall from the top of the vessel to the liquid surface. Eq 7-10 then relates the length of the separator to its diameter as a function of this settling velocity (assuming no liquid retention):

$$L = \frac{4\,Q_A}{\pi\,V_t\,D_v} \qquad \textbf{Eq 7-10}$$

If the separator is to be additionally used for liquid storage, this must also be considered in sizing the vessel.

Example 7-1—A horizontal gravity separator (without mist extractor) is required to handle 60 MMscfd of 0.75 specific gravity gas (MW = 21.72) at a pressure of 500 psig and a temperature of 100°F. Compressibility is 0.9, viscosity is 0.012 cp, and liquid specific gravity is 0.5. It is desired to remove all entrainment greater than 150 microns in diameter. No liquid surge is required.

Gas density, $$\rho_g = \frac{P\,(MW)}{RTZ} = \frac{(514.7)\,(21.72)}{(10.73)\,(560)\,(0.90)}$$

$$= 2.07 \text{ lb/ft}^3$$

Liquid density, $$\rho_l = 0.5\,(62.4) = 31.2 \text{ lb/ft}^3$$

Mass flow, $$M = \frac{(60)\,(10^6)\,(21.72)}{(379)\,(24)\,(3600)} = 39.8 \text{ lb/sec}$$

Particle diameter, $$D_p = \frac{(150)\,(0.00003937)}{12} = 0.000492 \text{ ft}$$

From Eq 7-3,

$$C'\,(Re)^2 = \frac{(0.95)\,(10^8)\,\rho_g\,D_p^3\,(\rho_l - \rho_g)}{\mu^2}$$

$$= \frac{(0.95)\,(10^8)\,(2.07)\,(0.000492)^3\,(31.2 - 2.07)}{(0.012)^2}$$

$$= 4738$$

From Fig. 7-4, Drag coefficient, $C' = 1.40$

Terminal velocity, $$V_t = \sqrt{\frac{4\,g\,D_p\,(\rho_l - \rho_g)}{3\,\rho_g\,C'}}$$

$$= \sqrt{\frac{4\,(32.2)\,(0.000492)\,(29.13)}{3\,(2.07)\,1.40}}$$

$$= \sqrt{0.212} = 0.46 \text{ ft/sec}$$

Gas flow, $$Q_A = \frac{M}{\rho_g} = \frac{39.80}{2.07} = 19.2 \text{ ft}^3\text{/sec}$$

Assume a diameter, $D_v = 3.5$ ft

Vessel length, $$L = \frac{4\,Q_A}{\pi\,V_t\,D_V} = \frac{4\,(19.2)}{\pi\,(0.46)\,(3.5)}$$

$$= 15.2 \text{ ft}$$

Other reasonable solutions are as follows:

Diameter, feet	Length, feet
3.5	15.2
4.0	13.3
4.5	11.8
5.0	10.6

Example 7-2—What size vertical separator without a mist extractor is required to meet the conditions used in Example 7-1?

$$A = \frac{Q_A}{V_t} = \frac{19.2}{0.46} = 41.7 \text{ ft}^2$$

$D_v = 7.29$ ft minimum

Use a 90-inch ID vertical separator.

Separators with Mist Extractors

Of the four major components of a separator that were discussed in a previous section, the mist extractor has the most impact on separated gas quality with respect to carried over liquid content. The sizing equations and parameters provided in the mist extraction section size the mist extractor itself, not the actual separation vessel. The gas capacities of the various types of mist extractors is generally inversely related to the amount of entrained liquid that the mist extractor is required to remove.

- the amount of liquid in the separator feed gas.
- the inlet flow condition of the feed, i.e. multiphase flow pattern, .
- the type of inlet device used.
- the sizing/dimensions of the gas gravity separation section of the separator.

For lightly liquid loaded separation applications, e.g. less than 10-15 BBL/MMSCF (gas scrubbing application), the mist extractor performance will be controlling and will generally dictate the cross-sectional area requirements of the gas gravity separation section. For a vertical separator, this will determine the vessel diameter. A horizontal vessel would not typically be used in a lightly loaded gas-liquid separation application. Good flow distribution to the mist extractor is still required.

In more heavily liquid loaded separation applications, a vertical or horizontal separator configuration may be chosen depending on the specific conditions. In either case, some "pre-conditioning" of the gas phase, specifically reduction of the gas entrainment loading, may be required ahead of the final mist extraction element.

Vertical Separators

Historically, the gas handling capacity of conventional vertical separators that employ mist extractors has normally been calculated from the Souders and Brown equation, Eq 7-8, using "experience-based" K factors. Typical K values for vertical separators from API 12J[7] are presented in Fig. 7-18.

In qualitative terms, the ranges of K given above may be taken to reflect difficulty of the separation conditions, i.e. from non-ideal/difficult to ideal/easy. As indicated in Fig. 7-18, K is also a function of vessel height. This reflects the fact that a certain minimum distance is required to establish a relatively uniform velocity profile before the gas reaches the mist extractor. Theoretically, it is not simply the vessel height that is important with respect to velocity profile, but the vertical height between the inlet device and the mist extractor. As gas handling capacity is based on an allowable limit for liquid carryover into the separated gas stream, and the final liquid removal element is the mist extractor, the mist extractor has a significant influence on the K value used for separator sizing.

The vertical height of the vessel is also influenced by the liquid handling requirements and general vessel layout criteria as indicated in Fig. 7-8. Typically, the liquid phase will occupy the lower third of the vessel height.

A design that optimizes the inlet feed flow condition and utilizes an efficient inlet device, may provide enough feed gas

FIG. 7-18

Typical Values of K for Vertical Separators

Height, feet	K, ft/sec
5	0.12 – 0.24
10 or taller	0.18 – 0.35

* assumes vessel is equipped with a wire-mesh mist extractor

pre-conditioning to allow the vessel diameter to be sized equivalent to the mist extractor. However, traditionally the method typically used has been to "oversize" the gas gravity section, i.e. vessel diameter, relative to the mist extractor. This has generally been done in two ways:

- Derate the mist extractor K factor and use this reduced K value in Eq 7-8 to determine the vessel diameter. Guidelines as to determination of the appropriate deration factor are not well defined. A relatively low liquid loading application with steady flow, a low inlet velocity and a good inlet device should require minimal deration of the extractor K factor, i.e. deration factor approximately equal to 1. On the other hand, an application with significant liquid volumes, unsteady flow, high velocity inlet and a simple diverter plate inlet device may require a deration factor of 0.5. Normally, it would be more economic to improve the inlet flow condition/device than to significantly oversize the vessel relative to the mist extractor requirements.
- Select a separable droplet size and size for the vessel diameter using Eq 7-1. A droplet size of 150 microns has been typically specified. This may be overly conservative for vane pack and cyclonic mist extractors, which generally have higher gas and liquid capacities than mesh pads.

Comparison of Eq 7-8 & Eq 7-1, indicates that

$$K = \sqrt{\frac{4_g\, D_P}{3C'}} \qquad \textbf{Eq 7-11}$$

This shows the approximate equivalence of the empirical K and the more theoretical droplet separation sizing methods. However, the value of K in Eq 7-8 as used in practice depends on other factors besides droplet size, drag coefficient, and liquid entrainment loading, including: type of internals, unsteady flow, surface tension, liquid viscosity, foaming, gas velocity profile uniformity, degree of separation required, etc. Additional duration may be required to account for these factors.

Horizontal Separators

Eq 7-8 can also be used for calculating the gas capacity of horizontal separators. However, some modifications are required to reflect the fact that in the gas gravity separation section of a horizontal separator, the liquid droplets are falling perpendicular to the gas flow rather than in direct opposition as occurs in a vertical separator. This makes it easier to separate droplets in a horizontal vessel. Partially offsetting this advantage is the fact that in a horizontal separator, the liquid gravity separation section is occupying part of the vessel cross section, leaving reduced area for gas flow.

In calculating the gas capacity of horizontal separators, the cross-sectional area of that portion of the vessel occupied by liquid (at maximum level) is subtracted from the total vessel cross-sectional area. Typical horizontal separator designs will have the normal liquid level at the half-full point. Values of K for horizontal separators from API 12J are given in Fig. 7-19.

There is some disagreement as to how K should vary with separator length. The API 12J recommendation is shown in Fig. 7-19. Many separators are greater than 10 feet in length, with some reaching 50 feet or more. The relationship shown in Fig. 7-19 for adjusting for length will give K factors greater than 1 ft/sec for large separators. These higher values of K for large (long) horizontal separators are generally considered to be overly optimistic. In practice, K = 0.5 ft/sec is normally used as an upper limit for horizontal separators equipped with wire-mesh mist extractors. Separators equipped with vane-type or cyclonic mist extractors may utilize higher K values than those for mesh pads.

The same general principles as discussed for vertical separators apply for horizontal separators with mist extractors in high liquid loading applications. For a horizontal separator, mesh pad and cyclonic type mist extractors will normally be installed horizontally with vertical upflow, while vane pack may be installed horizontally, vertically, or sometimes in a vee-pattern. Additionally, in a horizontal separator, the liquid droplets are settling perpendicular to the gas flow which makes separation easier. For these reasons, the approach of derating the mist extractor K to calculate the cross-sectional area of the gas gravity section is not as straightforward as for a vertical vessel. Typically the required cross-sectional area of the gas gravity section of a horizontal separator is sized based on droplet settling theory. The procedure is similar to that discussed previously for separators without mist extractors. For vessels with mesh pad mist extractors a typical droplet size for design is 150 microns. For separators equipped with vane-type or cyclonic mist extractors, a larger drop size may be appropriate, which may allow for a smaller vessel. The vessel manufacturer should be consulted.

FIG. 7-19

Values of K for Horizontal Separators

Length, ft	K, ft/sec
10	0.40 – 0.50
Other	$K_{10}\left(\frac{L}{10}\right)^{0.56}$

* assumes vessel is equipped with a wire-mesh mist extractor

In calculating the gas capacity of horizontal separators, the cross-sectional area of that portion of the vessel occupied by liquid (at maximum level) is subtracted from the total vessel cross-sectional area

LIQUID HANDLING

The design criterion for separator liquid handling capacity is typically based on the following two main considerations:

- Liquid degassing requirements.
- Process control/stability requirements.

Generally, one or the other of these factors will dictate. Liquid capacity is typically specified in terms of residence time, which must be translated into vessel layout requirements for dimensioning purposes. Residence time establishes the separator volume required for the liquid as shown in Eq 7-12:

$$U = \frac{W\,(t)}{1440} \qquad \textbf{Eq 7-12}$$

Typical residence times are shown in Figures 7-20 and 7-21.

Note that except for the Natural gas – condensate application, the residence times specified in Fig. 7-20 are primarily based on process control stability/operability.

These values are primarily intended to reflect liquid degassing requirements. In practice, process control stability and operability requirements will often override the degassing requirements.

Vessel layout recommendations, including liquid handling requirements, are given in Fig. 7-8 and 7-9 for vertical and horizontal separators, respectively.

The retention time requirements given in Figures 7-20 and 7-21 are not specific to vessel orientation. However, the liquid degassing process actually involves the separation of gas bubbles from the liquid phase, which under ideal conditions can be described by the gravity settling equation, Eq 7-1. Similar to liquid droplet settling out of the gas phase, it is easier for a gas bubble to rise perpendicularly through the moving liquid in a horizontal separator than directly against the downflowing liquid in a vertical vessel. Theoretically, for equal liquid residence times, the horizontal separator should be slightly more efficient at degassing. However, this has not typically been an issue in practice. If it is deemed necessary to calculate vessel liquid handling requirements for a degassing constraint according to gravity settling theory, a gas bubble size of 150–200 microns has been suggested by several sources.

FIG. 7-20

Typical Retention Times for Gas/Liquid Separator

Application	Retention Time, minutes
Natural Gas – Condensate separation	2 – 4
Fractionator Feed Tank	10 – 15
Reflux Accumulator	5 – 10
Fractionation Column Sump	2
Amine Flash Tank	5 – 10
Refrigeration Surge Tank	5
Refrigeration Economizer	3
Heat Medium Oil Surge Tank	5 – 10

FIG. 7-21

API 12J Retention Times for Gas-Oil Separators

Oil Gravity	Liquid Retention Time, min
> 35	1
20 – 35	1 to 2
10 – 20	2 to 4

Three-Phase and Liquid-Liquid Separation

The gas handling requirements for three-phase separation are dealt with in a similar manner as discussed for two-phase separation. Traditionally, sizing for liquid-liquid separation has involved specification of liquid residence times.

Fig. 7-22 provides suggested residence times for various liquid-liquid separation applications. These figures generally assume equal residence times for both the light and heavy liquid phases.

While the residence time approach for liquid-liquid separation equipment design has been widely used in industry for years, it does have some limitations.

- the typical approach of assuming equal residence times for both liquid phases may not be optimum, e.g. It is generally much easier to separate oil droplets from water than vice-versa. Settling theory (Eq 7-1) explains this as being due to the lower viscosity of water compared to oil.
- Residence times do not take into account vessel geometry, i.e. 3 minutes residence time in the bottom of a tall, small diameter vertical vessel will not achieve the same separation performance as 3 minutes in a horizontal separator, again according to droplet settling theory.
- The residence time method does not provide any direct indication as to the quality of the separated liquids, e.g. amount of water in the hydrocarbon or the amount of hydrocarbon in the water. Droplet settling theory can not do this either in most cases, but there is some empirical data available which allows for approximate predictions in specific applications.

FIG. 7-22

Typical Retention Times for Liquid-Liquid Separation

Type of Separation	Retention Time, minutes
Hydrocarbon/Water Separators[7]	
Above 35° API hydrocarbon	3 – 5
Below 35° API hydrocarbon	
100°F and above	5 – 10
80°F	10 – 20
60°F	20 – 30
Ethylene Glycol/Hydrocarbon[8] Separators (Cold Separators)	20 – 60
Amine/Hydrocarbon Separators[9]	20 – 30
Coalescer, Hydrocarbon/Water Separators[9]	
100°F and above	5 – 10
80°F	10 – 20
60°F	20 – 30
Caustic/Propane	30 – 45
Caustic/Heavy Gasoline	30 – 90

Removal of very small droplets may require the use of specialized internals or the application of electrostatic fields to promote coalescence.

Liquid-liquid separation may be divided into two broad categories of operation. The first is defined as "gravity separation," where the two immiscible liquid phases separate within the vessel by the differences in density of the liquids. Sufficient retention time must be provided in the separator to allow for the gravity separation to take place. The second category is defined as "coalescing separation." This is where small particles of one liquid phase must be separated or removed from a large quantity of another liquid phase. Different types of internal construction of separators much be provided for each type of liquid-liquid separators. The following principles of design for liquid-liquid separation apply equally for horizontal or vertical separators. Horizontal vessels have some advantage over verticals for liquid-liquid separation, due to the larger interface area available in the horizontal style, and the shorter distance particles must travel to coalesce.

There are two factors that may prevent two liquid phases from separating due to differences in specific gravity:

- If droplet particles are so small that they may be suspended by Brownian movement. This is defined as a random motion that is greater than directed movement due to gravity for particles less than 0.1 micron in diameter.
- The droplets may carry electric charges due to dissolved ions. These charges can cause the droplets to repel each other rather than coalesce into larger particles and settle by gravity.

Effects due to Brownian movement are usually small and proper chemical treatment will usually neutralize any electric charges. Then settling becomes a function of gravity and viscosity in accordance with Stoke's Law. The settling velocity of spheres through a fluid is directly proportional to the difference in densities of the sphere and the fluid, and inversely proportional to the viscosity of the fluid and the square of the diameter of the sphere (droplet), as noted in Eq 7-3. The liquid-liquid separation capacity of separators may be determined from Equations 7-13 and 7-14, which were derived from Equation 7-3.[9] Values of C* are found in Fig. 7-23.

Vertical vessels:

$$W_{cl} = C^{*}\left(\frac{S_{hl} - S_{ll}}{\mu}\right)(0.785)\,D_v^2$$

Eq 7-13

Horizontal vessel:

$$W_{cl} = C^{*}\left(\frac{S_{hl} - S_{ll}}{\mu}\right)L_l\,H_l$$

Eq 7-14

Since the droplet size of one liquid phase dispersed in another is usually unknown, it is simpler to size liquid-liquid separation based on retention time of the liquid within the separator vessel. For gravity separation of two liquid phases, a large retention or quiet settling section is required in the vessel. Good separation requires sufficient time to obtain an equilibrium condition between the two liquid phases at the temperature and pressure of separation. The liquid capacity of a separator or the settling volume required can be determined from Eq 7-12 using the retention time given in Fig. 7-22.

The following example shows how to size a liquid-liquid separator.

FIG. 7-23

Values of C* Used in Equations 7-13 and 7-14

Emulsion Characteristic	Droplet Diameter, microns	Constant,[10] C*
Free Liquids	200	1,100
Loose Emulsion	150	619
Moderate Emulsion	100	275
Tight Emulsion	60	99

Example 7-3—Determine the size of a vertical separator to handle 600 bpd of 55° API condensate and 50 bpd of produced water. Assume the water particle size is 200 microns. Other operating conditions are as follows:

Operating temperature = 80°F

Operating pressure= 1,000 psig

Water specific gravity = 1.01

Condensate viscosity = 0.55 cp @ 80°F

Condensate specific gravity for 55° API = 0.76

From Eq 7-13, $W_{cl} = C^{*}[(S_{hl} - S_{ll}) / \,] \times 0.785 \times D_v^2$

From Fig. 7-23 for free liquids with water particle diameter = 200 microns, C* = 1,100

600 bbl/day = 1,100 x [1.01 – 0.76) / 0.55] x 0.785 x D_v^2

$D_v^2 = 660 / 392.5 = 1.53\ \text{ft}^2$

$D_v = 1.24$ feet

Using a manufacturer's standard size vessel might result in specifying a 20-inch OD separator.

Using the alternate method of design based on retention time as shown in Equation 7-12 should give:

$V_1 = ql(t) / 1440$

From Fig. 7-22, use 3 minutes retention time

$V_1 = 650 \times 3 / 1440 = 1.35$ bbl

$V_1 = 1.35 \times 42 = 56.7$ gallons

Assuming a 20-inch diameter and 1,480 psig working pressure, a vessel would be made from a 1.031-inch wall seamless pipe which holds 13.1 gal/ft. The small volume held in the bottom head can be discounted in this size vessel. The shell height required for the retention volume required would be:

Shell height = V_1 / vol/ft = 56.7 / 13.1 = 4.3 feet

This would require a 20 inch OD x 10 foot separator to give sufficient surge room above the liquid settling section for any vapor-liquid separation.

Another parameter that should be checked when separating amine or glycol from liquid hydrocarbons is the interface area between the two liquid layers. This area should be sized so the glycol or amine flow across the interface does not exceed approximately 2,000 gal/day/ft^2.

The above example indicates that a relatively small separator would be required for liquid-liquid separation. It should be remembered that the separator must also be designed for the vapor capacity to be handled. In most cases of high vapor-liquid loadings that are encountered in gas processing equipment design, the vapor capacity required will dictate a much larger vessel than would be required for the liquid load only. The properly designed vessel has to be able to handle both the vapor and liquid loads. Therefore, one or the other will control the size of the vessel used.

FILTER SEPARATORS AND COALESCING FILTERS

General

There are two main types of filtration equipment used in gas-liquid separation service in the gas processing industry: the filter separator or "filter sep" and the coalescing filter. Both equipment types are of proprietary design, and the manufacturer should be contacted for detailed selection and sizing.

Filter Separator

Filter separators are available in horizontal and vertical orientations, with horizontal the most common. Fig. 7-24 shows a horizontal filter separator. This type of separator is often used for solids and liquid removal in relatively low liquid loading applications. A filter separator is a two-stage device. Gas enters the inlet nozzle and passes through the filter section, where solid particles are filtered from the gas stream and liquid particles are coalesced into larger droplets. Any free liquids are also removed in the first section. The coalesced droplets pass through the filter riser tubes and are carried into the second section of the separator, where a final mist extraction element removes these droplets from the gas stream. Flow through the filter elements is from an outside-to-inside direction. A pressure drop of 1-2 psi is normal in a clean filter separator. If solids are present, it will normally be necessary to replace the filter elements at regular intervals. A 10 psi pressure drop criteria is often used for filter changeout. Removal of the filters is achieved via a quick-opening closure.

The second stage of a filter separator contains a mist extraction device. As for a conventional separator this may be a mesh pad, vane pack or multicyclone bundle. The same issues regarding mist extractor selection criteria, sizing, etc. apply as discussed previously. Mesh pads and vane pack are most commonly utilized.

The design of filter separators is proprietary and a manufacturer should be consulted for specific sizing and recommendations.

Coalescing Filter

The coalescing filter is a more recent (early 1980s) piece of separation equipment designed for "gas polishing' service. Fig.

FIG. 7-24

Horizontal Filter-Separator

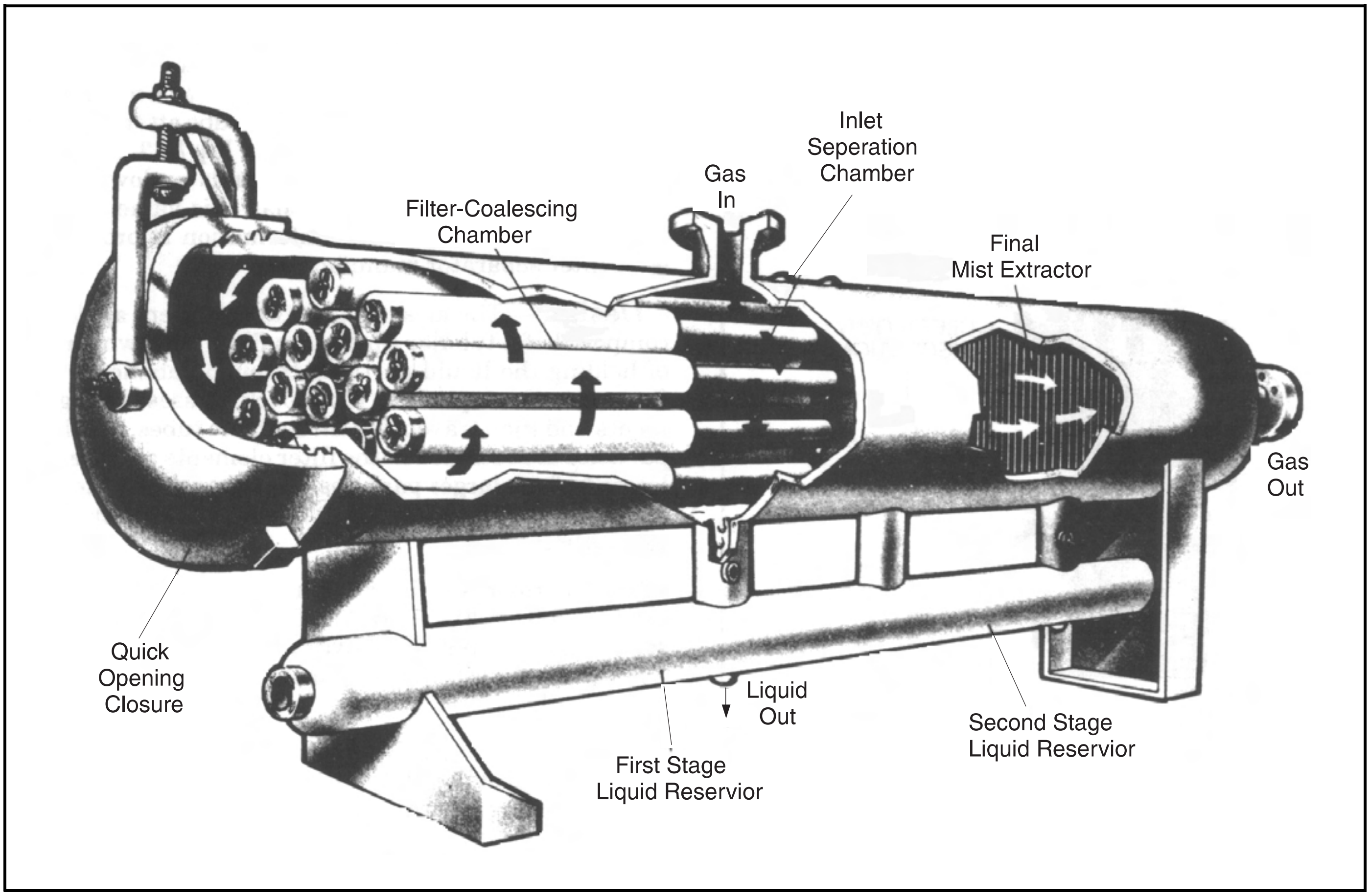

7-25 illustrates a typical coalescing filter. A coalescing filter is typically intended to remove fine liquid aerosols/mist from gas streams where entrained liquid loads are low. A typical filtration rating for coalescing filter elements is 0.3 microns absolute. This means that solid spherical particles larger than 0.3 micron are unable to pass through the filter element. Aerosol liquid coalescing performance is not as easily quantifiable and is subject to several factors. A coalescing filters are normally used to protect equipment/processes that are particularly sensitive to contamination. Two of the most common applications are upstream of mole sieve systems and amine contactors. The unit is typically intended to remove carryover from an upstream conventional separator and/or any liquids that may condense from the gas phase due to temperature or pressure reduction. Coalescing filters can experience short filter element life if the gas contains appreciable amounts of solids, e.g. corrosion products.

PARTICULATE REMOVAL — FILTRATION

Filtration, in the strictest sense, applies only to the separation of solid particles from a fluid by passage through a porous medium. However, in the gas processing industry, filtration commonly refers to the removal of solids and liquids from a gas stream.

FIG. 7-25

Typical Coalescing Filter

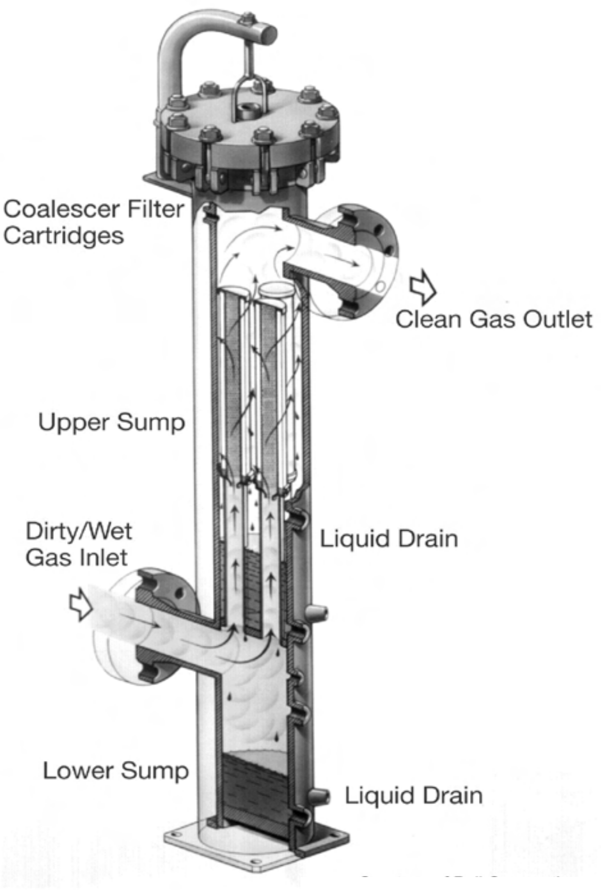

Courtesy of Pall Corporation

The most commonly used pressure filter in the gas processing industry is a cartridge filter. Cartridge filters are constructed of either a self-supporting filter medium or a filter medium attached to a support core. Depending on the application, a number of filter elements are fitted into a filter vessel. Flow is normally from the outside, through the filter element, and out through a common discharge. When pores in the filter medium become blocked, or as the filter cake is developed, the higher differential pressure across the elements will indicate that the filter elements much be cleaned or replaced.

Cartridge filters are commonly used to remove solid contaminants from amines, glycols, and lube oils. Other uses include the filtration of solids and liquids from hydrocarbon vapors and the filtration of solids from air intakes of engines and tubing combustion chambers.

Two other types of pressure filters that also have applications in the gas processing industry include the edge and precoat filters. Edge filters consist of nested metallic discs enclosed in a pressure cylinder that are exposed to liquid flow. The spacing between metal discs determines the solids retention. Some edge filters feature a self-cleaning design in which the discs rotate against stationary cleaning blades. Applications for edge filters include lube oil and diesel fuel filtration as well as treating solvents.

Precoat filters find use in the gas processing industry; however, they are complicated and require considerable attention. Most frequent use is in larger amine plants where frequent replacement of cartridge elements is considerably more expensive than the additional attention required by precoat filters.

The precoat filter consists of a course filter medium over which a coating has been deposited. In many applications, the coating is one of the various grades of diatomaceous earth that is mixed in a slurry and deposited on the filter medium. During operation, additional coating material is often added continuously to the liquid feed. When the pressure drop across the filter reaches a specified maximum, the filter is taken offline and backwashed to remove the spent coating and accumulated solids. Applications for precoat filters include water treatment for water facilities as well as amine filtration to reduce foaming. Typical designs for amine plants use 1-2 gpm flow per square foot of filter surface area. Sizes range upward from 10-20% of the full stream rates.[11]

Filtration Equipment Removal Ratings[12]

The two main methods of specifying removal ratings for filters are 1) nominal rating, and 2) absolute rating. Nominal rating typically means that 90% (or sometimes 95%) by weight of the contaminants above a specified size (e.g. 10 µm) has been removed. The 2% (or potentially 5%) of the contaminant passing through the filter is not defined by the test. Therefore, it is possible to have particle much larger than the nominal size (e.g. 30 µm to 100 µm).

Absolute rating can be defined by one of two standards. The National Fluid Power Association's (NFPA's) standard of absolute rating states that the diameter of the largest hard spherical particle that will pass through a filter under specified test conditions is an indication of the largest opening in the filter. The Beta (β) Rating System determined by the Oklahoma State University, "OSU F-2 Filter Performance Test" determines the ratio of the number of particles of a given size in the influent divided by the number of particles of the same given size in the effluent. This results in the following equation for relating the β value to removal efficiency:

$$\% \text{ removal} = (\beta - 1) / \beta \times 100 \qquad \textbf{Eq 7-15}$$

Most "absolute" filters typically have a β of 10,000 (99.99% removal).

Special Applications – Slug Catcher Design[13]

Slug catcher design is a special application of gas-liquid separator design. Performing these calculations is a combination of pipeline multiphase hydraulics and separator sizing. There are two main types of slug catchers, vessel and pipe. Reference 13 provides design details and an example of slug catcher design.

REFERENCES

1. Perry, Robert H., Editor, Chemical Engineers' Handbook, 5th Edition, McGraw-Hill Book Company, 1973, Chapter 5, p. 5–61-65.
2. American Petroleum Institute, RP 521, Guide for Pressure Relieving and Depressuring Systems, 4th Edition, March 1997, p. 64.
3. Perry, Robert H., Editor, Chemical Engineers' Handbook, 3rd Edition, McGraw-Hill Book Company, 1950, p. 1019.
4. Reid, Laurance S., "Sizing Vapor Liquid Separators," Proceedings Gas Conditioning Conference 1980, University of Oklahoma, p. J-1 to J-13.
5. Souders, Mott Jr. and Brown, George G., "Design of Fractionating Columns—Entrainment and Capacity," Industrial and Engineering Chemistry, Volume 265, No. 1, January 1934, p. 98.
6. Fabian, P., Cusack, R., Hennessey, P., Newman, M., "Demystifying the Selection of Mist Eliminators, Part I," Chemical Engineering, November 1993.
7. American Petroleum Institute Spec. 12J Specifications for Oil and Gas Separators, 7th Edition, October 1989.
8. Pearce, R.L., and Arnold, J.L., "Glycol-Hydrocarbon Separation Variables," *Proceedings Gas Conditioning Conference 1964*, University of Okalahoma.
9. Sivalls, C.R., Technical Bulletin No. 133, Sivalls, Inc., 1979, Odessa, Texas.
10. American Petroleum Institute, Manual on Disposal of Refinery Wastes, Volume 1, 6th Edition, 1959, p. 18-20, and private industry data.
11. Paper presented by W.L. Scheirman, "Diethanol Amine Solution Filtering and Reclaiming in Gas Treating Plants," *Proceedings Gas Conditioning Conference 1973*, University of Oklahoma.
12. Perlmutter, Barry A., "Principles of Filtration", Paul Well Technology Corporation, Version 5300, February 1983.
13. Rhinesmith, R. Bret, Kimmitt, Russell P., and Root, Chris R., "Proven Methods for Design and Operation of Gas Plant Liquid Slug Catching Equipment", 80th Annual Gas Processors Convention, San Antonio, Texas, March 12-14, 2001.

BIBLIOGRAPHY

1. Schweitzer, Phillip A., Handbook of Separation Techniques for Chemical Engineers, McGraw-Hill, 1979.
2. Perry, John H., Editor, Chemical Engineers' Handbook, 3rd Edition, "Section 15 Dust and Mist Collection" by C.E. Lapple, McGraw-Hill, New York, 1950, p. 1013-1050.
3. Perry, Dunham, Jr., "What You Should Know about Filters," *Hydrocarbon Processing*, Volume 45, No. 4, April 1966, p. 145-148.
4. Dickey, G.D., Filtration, Reinhold Publishing Corporation, New York, 1981.
5. Gerunda, Arthur, "How to Size Liquid-Vapor Separators," *Chemical Engineering*, Volume 91, No. 7, May 4, 1981, p. 81-84.
6. Ludwig, Ernest E., Applied Process Design for Chemical and Petrochemical Plants, Volume 1, Gulf Publishing Co., Houston, Texas, 1964, p. 126-159.
7. York, Otto H., "Performance of Wire Mesh Demisters, *Chemical Engineering Progress*, Volume 50, No. 8, August 1954, p. 421-424.
8. York, Otto H., and Poppele, E.W., "Wire Mesh Mist Eliminators," *Chemical Engineering Progress, Volume 59, No. 6, June 1963, p. 45-50.*
9. Fewel, Kenneth J. Jr. and Kean, James A., "Computer Modeling and Separator Retrofit," Oil and Gas Journal, July 6, 1992, p 76-80.
10. Fewel, Kenneth J. Jr. and Kean, James A., "Vane Separators in Gas/Liquid Separation," Pipeline Engineering, PD-Volume 46, 1992.
11. Heinze, A.J., "Pressure Vessel Design for Process Engineers," Hydrocarbon Processing, May 1979, p 181-191.
12. Swanborn, R.A., Koene, F., and de Graauw, J., "New Separator Internals Cut Revamping Costs," Journal of Petroleum Technology, August 1995, p. 688-692.
13. Powers, M.L., "Analysis of Gravity Separation in Free-Water Knockouts," SPE 18205, 63rd Annual Technical Conference, Houston, TX, October 1988.
14. Arnold, K.E., and Koszela, P.J., "Droplet-Settling Versus Retention-Time Theories for Sizing Oil/Water Separators," SPE Production Engineering, February 1990.

SECTION 8

Fired Equipment

Fired equipment transfers heat produced by combustion of the fuel to the process stream. In gas processing equipment, the fuel is usually natural gas; however, ethane, propane, or light oils are sometimes used. The process stream varies widely, e.g., natural gas, heavier hydrocarbons, water, glycol, amine solutions, heat transfer oils, and molten salts.

Fired equipment can be classified as:

1. Direct fired heaters where the combustion gases occupy most of the heater volume and heat the process stream contained in pipes arranged in front of refractory walls – the radiant section – and in a bundle in the upper portion – the convection section. Convective heaters are a special application in which there is only a convection section.

FIG. 8-1

Nomenclature

a = constant, Eq. 8-21
A = area, sq ft
AO = dry combustion air mols per dry fuel mols, for stochiometric combustion, mols/mols
B = parameter defined by Eq 8-21
c = number of carbon atoms in fuel molecule
C = constant, Eq 8-4 and Eq 8-8
C_d = burner spud discharge coefficient
C_p = specific heat, Btu/(lb • °F)
CO = carbon monoxide mols in mols of dry flue gases, mols/mols
CO_2 = carbon dioxide mols in mols of dry flue gases, mols/mols
CO_{2_o} = carbon dioxide mols in mols of dry flue gases for stochiometric combustion, mols/mols
d = diameter of pipe or cylinder or fin, in.
D = diameter of pipe or cylinder, ft
EA = volume percentage of excess combustion air, %
f_f = Fanning friction factor
F = view factor, dimensionless
Fl_o = mols of dry flue gases per mols of dry fuel for stochiometric combustion, mols/mols
g = acceleration due to gravity = 32.17 ft/sec^2
g_c = 32.17 lb mass • ft/(lb force • sec^2)
G = Ratio of air to fuel, lb/lb; or
= mass velocity, lb/(sec • sq ft)
GHI = gross heat input, Btu/hr
GTE = gross thermal efficiency, Eq 8-17a
Gr = Grashof number, dimensionless
h = heat transfer coefficient, Btu/(hr • sq ft • °F)
H = heat content or enthalpy, Btu/lb; or
= height of stack, ft; height of fin, in.
Hav = available draft, inches water column (gauge)
HHV = higher or gross heating value, Btu/SCF
hy = number of hydrogen atoms in fuel molecule
I = average tube radiant heat flux intensity (circumferential), Btu/(hr • sq ft)
k = thermal conductivity, Btu/[(hr • sq ft • °F)/ft]
L = length of heat transfer surface, ft; or
= mean beam length, ft; or
= characteristic dimension, ft
LHV = lower or net heating value, Btu/SCF
m = constant, Eq 8-4 and Eq 8-8
M = mass flow rate, lb/hr
MPH = velocity, miles/hr
n = number of fins per foot, number of tube rows
ni = number of nitrogen atoms in fuel molecule
Nu = Nusselt number, dimensionless
NHI = net heat input, Btu/hr
NPS = nominal pipe size, in.
NTE = net thermal efficiency, Eq 8-17b
o = number of oxygen atoms in fuel molecule
O_2 = oxygen mols in mols of dry flue gases, mols/mols
O_{2_o} = oxygen mols in mols of dry flue gases for stochiometric combustion, mols/mols
P = partial pressure of CO_2 + H_2O, atm
P_B = barometric pressure, in. Hg @ 32°F
ΔP = pressure difference, psi
Pg = burner fuel gas pressure, psia
Pr = Prandtl number, dimensionless
q_{gs} = gas flow rate at standard conditions, SCF/day
q_l = liquid flow rate, gals./min
Q = heat transfer or heat input or heat content (rates), Btu/hr
r = ratio of flue gases to heat release, lb/MMBtu
rf = fouling heat flow resistance, hr • sq ft • °F/Btu
R = fraction of total heat liberation absorbed in radiant section (Fig. 8-20)
Re = Reynolds number, dimensionless
s = number of sulfur atoms in fuel molecule
S = tube spacing, in.
SCF = standard cubic feet at 14.696 psia and 60°F
SG = specific gravity
t = fin thickness, in.
T = temperature, °R
ΔT = temperature difference, °F

FIG. 8-1 (Cont'd)

Nomenclature

U = overall heat transfer coefficient, Btu/(hr • sq ft • °F)
UHT = useful heat transferred or heat duty, Btu/hr
V = velocity, ft/sec
w = weight of air, lb
wt = wall thickness, in.
Δx = distance in direction of heat transfer, ft or in.
Y = expansion factor, dimensionless

Greek

β = volumetric coefficient of thermal expansion, 1/°F
ε_1, ε_2, = emissivities of combustion gases and wall, respectively
μ = viscosity of fluid, cp
ρ = density of fluid, lb/cu ft
σ = Stefan-Boltzmann constant, 0.171 (10^{-8}) Btu/(hr • sq ft • $°R^4$)
π = 3.1416

Subscripts

a = atmospheric air at operating conditions
as = air at standard conditions
B = barometric
b = bulk
c = convective
cs = cross section (projection)
f = fin; fouling; friction; Fanning
g = gas
gs = gas at standard conditions
i = inside, internal
LM = log mean base e
m = middle surface
o = outside, external, overall
p = pipe
r = radiant
s = stack
w = wall
1 = burner operating conditions 1
2 = burner operating conditions 2

2. Firetube heaters where the combustion gases are contained in a firetube that is surrounded by a liquid that fills the heater shell. This liquid may be either the process stream or a heat transfer medium that surrounds the coil bundle containing the process stream.

Fig. 8-2 lists the common applications and general characteristics of these heaters.

FIG. 8-2

Heater Applications and Characteristics

Direct Fired	Firetube
Applications	
Hot oil heater Regeneration gas heaters Amine and stabilizer reboilers	Indirect fired water bath heaters (line heaters) Propane and heavier hydrocarbon vaporizers Hot oil and salt bath heaters Glycol and amine reboilers Low pressure steam generators
Characteristics	
More ancillary equipment and controls Higher thermal efficiency Requires less plot space Forced or natural draft combustion	Heat duty usually less than 10 MMBtu/hr Easily skid mounted Forced or natural draft combustion Less likely to have hot spots or tube rupture

HEAT TRANSFER

Conduction

Fourier's law of conduction gives the rate of heat transfer through substances resulting from vibrations and interactions between adjacent molecules as opposed to overall motion or mixing of the molecules. Conduction always applies to solids and rarely to fluids.

Fundamental equations for steady heat conduction through some common solid shapes, ignoring border conditions, are:

For unidimensional perpendicular heat flow through flat walls, as in heat flow through a square or very large cylindrical tank wall:

$$Q = 12 \bullet k \bullet A \bullet \frac{\Delta T}{wt} \qquad \textbf{Eq 8-1}$$

For heat transfer in cylindrical geometry where the heat transfer is normal to the axis, as in heat flow through a cylindrical vessel or pipe wall:

$$Q = \frac{2 \bullet \pi \bullet L \bullet k \bullet \Delta T}{ln\,(D_o / D_i)} = \frac{2 \bullet \pi \bullet L \bullet k \bullet \Delta T}{ln\,(d_o / d_i)} \qquad \textbf{Eq 8-2a}$$

For radial heat flow through a spherical vessel:

$$Q = \frac{2 \bullet \pi \bullet k \bullet \Delta T}{(1/D_i) + (1/D_o)} = \frac{\pi \bullet k \bullet \Delta T}{(6/d_i) + (6/d_o)} \qquad \textbf{Eq 8-2b}$$

Fig. 8-3 gives the thermal conductivities and densities of commercial refractories and insulation. Similar data for metals are given in Fig. 8-8 and Fig. 9-8.

FIG. 8-3

Properties of Commercial Refractories and Insulations

Products	Max Service Temp, °F (Note 1)	Thermal Conductivity, Btu/((hr • ft^2 • °F)/in) at Mean Temperature, °F (Note 16)					Density, lb/ft^2	Cold Crush Strength, lb/in^2	Notes
		500	1000	1500	2000	2500			
FIREBRICK									
H-W Karundal XD	3300	24.4	20.4	19.6	19.6	19.7	187	15600	2
H-W UFALA	3000	13.0	12.8	13.1	13.6	14.4	157	7000	
APGreen KX-99	2500	9.7	9.9	10.2	10.7	11.1	143	10700	
APGreen Empire S	2400	8.3	8.8	9.2	9.5	9.9	132	2100	
INSULATING BRICK									
APGreen Greenlite 30	3000	2.6	3.1	3.6	4.0	4.5	61	1175	
Thermal Ceramics K-25	2500	1.1	1.3	1.5	1.7		38	220	
Thermal Ceramics K-23	2300	1.0	1.2	1.5	1.7		31	145	
Thermal Ceramics K-20	2000	0.9	1.1	1.4			29	125	
HEAVY CASTABLE									
APGreen Greencast 94	3400	14.5	12.6	11.3	10.7	10.8	163	5800	2,3,4,5
APGreen Mizzou	3000	7.8	7.7	7.5	7.4	7.4	139	3000	3,11
LIGHT CASTABLE									
APGreen Kast-O-Lite 25	2600	3.6	3.5	3.7	4.0		86	1300	8
APGreen 45-L	2500	2.7	2.6	2.5			71	2500	3,6,7,8
APGreen Castable 22	2200	1.7	1.9	2.2	2.5		53	275	3,8
APGreen Cast Block Mix	1600	0.6	1.0	1.5			22	20	8
GUN & RAM MIXES									
Premier 85 RAM HS	3000	21.7	14.1	12.6	11.9	12.1	175	5000	5,9
H-W Tuff Shot LI	2600	6.2	6.5	6.7	6.8	6.9	119	3450	6,11
APGreen Kast-O-Lite 26-LI GR	2600	3.6	3.7	3.9	4.3		92	2000	
CERAMIC FIBER									
Thermal Ceramics Saffl	2800	0.38	0.7	1.0	1.5	2.3	3		4
Fiberfrax Durablanket 2600	2600	0.51	1.15	2.18	3.56		6		
Fiberfrax Durablanket 2600	2600	0.51	0.98	1.81	2.96		8		
Fiberfrax 550 Paper	2300	0.42	0.75	1.33	2.12		12		
Thermal Cer Cerablanket	2150	0.5	1.0	1.7	2.6		6		
Thermal Cer Cerablanket	2150	0.37	0.8	1.5	2.1		8		
BLOCK & BOARD									
Fiberfrax Duraboard LD	2300	0.56	0.85	1.24	0.73		16	50	
Fiberfrax Duraboard HD	2300	0.56	0.85	1.47	1.61		26	70	
Thermal Ceramics TR-20	2000	0.64	0.77	0.92			25	201	12
USG K-FAC 19	1900	0.51	0.89				18.5	33	10,13
Schuller Thermo 12	1200	0.45	0.64				15	160	10,14
PARTEK Paroc 1212	1200	0.42	0.98				12		10,13
Schuller 1000 SpinGlas	850	0.50					3		10,15

NOTES

1. Maximum Service Temperature listed has no safety factor included.
2. 90-94% Alumina product for extreme temperature or high velocity service.
3. Cast properties listed, gunning product available but properties will be different.
4. Low silica product.
5. For burner blocks and severe service.
6. Can be used as one shot (single layer) lining.
7. High performance medium weight lining.
8. May be used as back-up insulation in 2 layer lining.
9. 85% Alumina ramming plastic for burner blocks, etc.
10. For external insulation only.
11. May be used as hot face lining in dual layer system.
12. Diatomaceous earth base.
13. Mineral wool base.
14. Calcium silicate base.
15. Fiber glass base.
16. Convert to Btu /[(hr • ft^2 • °F) /ft] before using in equations in this section.

Example 8-1 — Estimate the loss per linear foot through a one inch layer of block insulation covering an 8 in. Sch 40 steam header. Assume:

$T_i = 250°F$

$T_o = 50°F$

$k = 0.0417$ Btu/[(hr • sq ft • °F)/ft.]

(Both ft and in. are usually used in the thermal conductivity units for insulating materials; the following equations use ft.)

Solution Steps

From Eq 8-2a

$$Q = \frac{2 \bullet \pi \bullet k \bullet \Delta T}{ln\,(d_o / d_i)}$$

$$= \frac{2 \bullet \pi\,(0.0417)(250–50)}{ln\,(10.625 / 8.625)}$$

$$= 251.2 \text{ Btu/hr per linear ft}$$

Convection

Heat transfer between a solid and an adjacent fluid occurs by movement of the fluid molecules. Hot molecules leave the surface of the solid and are replaced by cold ones. Most of the resistance to this form of heat transfer occurs in a thin film or layer next to the solid surface. This layer exists even if the bulk fluid flow is violently turbulent.

Newton's law of cooling applies to convective heat transfer

$$Q = h \bullet A \bullet \Delta T \qquad \textbf{Eq 8-3}$$

Natural or free convection — occurs when the only force promoting the fluid flow results from temperature differences in the fluid. Under these conditions the heat transfer coefficient is obtained from the Nusselt equation.

$$Nu = C\,(Gr \bullet Pr)^m \qquad \textbf{Eq 8-4}$$

Where

$$Nu = \frac{h \bullet D_o}{k} = \frac{h \bullet d_o}{12 \bullet k} \qquad \textbf{Eq 8-5a}$$

or $$Nu = \frac{h \bullet L}{k} \qquad \textbf{Eq 8-5b}$$

$$Gr = \frac{2.214 \bullet 10^6 \bullet D_o^3 \bullet \rho^2 \bullet g \bullet \beta \bullet \Delta T}{\mu^2}$$

$$= \frac{1281 \bullet d_o^3 \bullet \rho^2 \bullet g \bullet \beta \bullet \Delta T}{\mu^2} \qquad \textbf{Eq 8-6a}$$

or $$Gr = \frac{2.214 \bullet 10^6 \bullet L^3 \bullet \rho^2 \bullet g \bullet \beta \bullet \Delta T}{\mu^2} \qquad \textbf{Eq 8-6b}$$

$$Pr = \frac{2.419 \bullet C_p \bullet \mu}{k} \qquad \textbf{Eq 8-7}$$

The constants C and m depend on the shape and size of the solid surface, the orientation of the surface to the fluid, whether the solid is hotter than the fluid or vice versa, and the magnitude of (Gr • Pr). A brief summary of C and m for some usual situations is given in Fig. 8-4.

Nu, Gr, and Pr are dimensionless when the units indicated in Fig. 8-1 are used in equations 8-4 through 8-7. The physical properties are those of the fluid at the film temperature, which is often assumed to be the average of the solid surface and bulk fluid temperatures. Fluid properties may have to be evaluated at an assumed film temperature, and this assumption then confirmed from the results — see Example 8-4.

FIG. 8-4

Heat Transfer Constants[2] for Eq 8-4
(Natural or Free Convection)

Configuration	D or Y (Y = Gr • Pr)	C	m
Vertical Plates or Cylinders	$Y < 10^4$	1.36	0.20
	$10^4 < Y < 10^9$	0.55	0.25
	$10^9 < Y$	0.13	0.33
Horizontal Plates:			
Facing Up	$10^5 < Y < 2(10^7)$	0.54	0.25
Facing Up	$2(10^7) < Y < 3\,(10^{10})$	0.14	0.33
Facing Down	$3(10^5) < Y < 3(10^{10})$	0.27	0.25
Long Horizontal Cylinders L > D	$D < 0.1$	0.53	0.25
	$0.1 < D < 0.5$	0.47	0.25
	$0.5 < D$	0.11	0.33
Short Horizontal Cylinders L = D < 8 in.	$Y < 10^{-5}$	0.49	0.00
	$10^{-5} < Y < 10^{-3}$	0.71	0.04
	$10^{-3} < Y < 1$	1.09	0.10
	$1 < Y < 10^4$	1.09	0.20
	$10^4 < Y < 10^9$	0.53	0.25
	$10^9 < Y$	0.13	0.33

The coefficient of thermal expansion β for low pressure gas (i.e. ideal gas) equals 1/(T, °R). It is left in this form for use in Gr and is not converted to 1/°F for dimensional consistency.

Example 8-2 — What is the heat transfer coefficient for natural convection around a 3 in. Sch 40 pipe surrounded by water at 190°F? Assume T_o for the pipe is 114°F.

Solution Steps

$$T_{film} = (190 + 114)/2 = 152°F\ (612°R)$$

From Eq. 8-4, 8-5a, 8-6a and 8-7 and Fig. 8-4:

$$Nu = 0.47\,(Gr \bullet Pr)^{0.25}$$

$$\frac{h \bullet d_o}{12 \bullet k} = 0.47 \left[\frac{1281 \bullet d_o^3 \bullet \rho^2 \bullet g \bullet \beta \bullet \Delta T \bullet C_p \bullet 2.419}{\mu \bullet k}\right]^{0.25}$$

$d_o = 3.5$ in.

$\rho = 61.8$ lb/cu ft

$g = 32.17$ ft / sec^2

$\beta = 0.00035°F^{-1}$

$\Delta T = 190 - 114 = 76°F$

$C_p = 1.00$ Btu/(lb • °F)

$\mu = 0.63$ cp

$k = 0.365$ Btu/[(hr • sq ft • °F)/ft]

The properties of water (ρ, β, μ, k) are based on the film temperature.

Substituting:

$$h = \frac{(12)(0.47)(0.365)}{3.5}\left[\frac{1281(3.5)^3(61.8)^2(32.17)(0.00035)(76)(1.0)(2.419)}{(0.63)\,(0.365)}\right]^{0.25}$$

$$= 0.588\,[1.889\,(10^9)]^{0.25}$$

$$= 122.6 \text{ Btu/(hr • sq ft • °F)}$$

Forced convection — occurs when the fluid flow adjacent to a solid is promoted by external force, e.g., pumping, agitation, etc. The result is a substantial increase in the heat transfer rate. The Dittus-Boelter correlation is:

$$\text{Nu} = C \bullet \text{Re}^m \bullet \text{Pr}^{0.33} \qquad \textbf{Eq 8-8a}$$

Utilization of a viscosity correction term gives the Sieder-Tate correlation:

$$\text{Nu} = C \bullet \text{Re}^m \bullet \text{Pr}^{0.33} \, (\mu_b/\mu_w)^{0.14} \qquad \textbf{Eq 8-8b}$$

Where

$$\text{Re} = \frac{1488 \bullet D \bullet V \bullet \rho}{\mu} = \frac{124 \bullet d \bullet V \bullet \rho}{\mu} \qquad \textbf{Eq 8-9a}$$

$$= \frac{0.5263 \bullet M}{D \bullet \mu} = \frac{6.316 \bullet M}{d \bullet \mu}$$

$$= \frac{4.221 \bullet q_l \bullet \rho}{D \bullet \mu} = \frac{50.66 \bullet q_l \bullet \rho}{d \bullet \mu}$$

$$= \frac{q_{gs} \bullet SG}{598 \bullet D \bullet \mu} = \frac{0.02007 \bullet q_{gs} \bullet SG}{d \bullet \mu}$$

or

$$\text{Re} = \frac{1488 \bullet L \bullet V \bullet \rho}{\mu} \qquad \textbf{Eq 8-9b}$$

Equation 8-8b need be used only for high viscosity fluids such as glycol.

As before, Re is dimensionless when the units indicated in Fig. 8-1 are used in equations 8-9a and 8-9b. The constants C and m depend on the configuration and the type of fluid flow — laminar, intermediate, or turbulent — which is characterized by the magnitude of the Reynolds number. Fig. 8-5 lists values for the more common situations.

Example 8-3 — Find the heat transfer coefficient for 10 MMscfd of 0.6 gravity natural gas flowing at 2000 psia in a 3 in. Sch 80 pipe when the pipe wall and gas temperatures are 104 and 72°F, respectively.

Solution Steps

$$T_{\text{film}} = (104 + 72)/2 = 88°\text{F}$$

From Eq 8-7, 8-8a and 8-9a and Fig. 8-5:

$$\text{Nu} = 0.023 \, (\text{Re})^{0.8} \, (\text{Pr})^{0.33}$$

$$\frac{h \bullet d_i}{12 \bullet k} = 0.023 \left(\frac{0.02 \bullet q_{gs} \bullet SG}{d_i \bullet \mu}\right)^{0.8} \left(\frac{2.419 \bullet C_p \bullet \mu}{k}\right)^{0.33}$$

where: $d_i = 2.90$ in.

$\mu = 0.019$ cp

$k = 0.03$ Btu/[(hr • sq ft • °F)/ft]

$C_p = 0.73$ Btu / (lb • °F)

$q_{gs} = 10 \, (10^6)$ scfd

$$\text{Re} = \frac{0.02 \bullet q_{gs} \bullet SG}{d \bullet \mu} = $$

$$= \frac{0.02 \, (10) \, (10^6) 0.6}{2.9 \, (0.019)} = 2.18 \, (10^6)$$

$$\text{Pr} = \frac{2.419 \bullet Cp \bullet \mu}{k} = \frac{2.419 \bullet 0.73 \bullet 0.019}{0.03}$$

$$= 1.118$$

$$h_i = \frac{(0.023)\,(12)\,(0.03)}{2.9} [2.18 \, (10^6)]^{0.8} \, (1.118)^{0.33}$$

$$= 349.9 \text{ Btu /(hr} \bullet \text{sq ft} \bullet °\text{F)}$$

Overall Heat Transfer Coefficient

So far, only the individual or local heat transfer coefficients have been considered. As discussed in Section 9 "Shell and Tube Heat Exchangers" the individual heat transfer coefficients are combined into an overall heat transfer coefficient. See Fig. 9-3 for calculation of ΔT_{LM}.

$$Q = U \bullet A \bullet \Delta T_{LM} \qquad \textbf{Eq 8-10}$$

U must be based on some specific area. Considering all the resistances to radial heat transfer through a hollow cylinder whose wall is made of two different materials (i.e. metal pipe and a layer of insulation), the overall heat transfer based on the insulation outside diameter is:

FIG. 8-5

Heat Transfer Constants for Equation 8-8[2,3] Forced Convection

Configuration	Characteristic Length	Re	Pr	C	m
Flat plate parallel to flow	Plate length	$10^3 < Re < 10^5$	> 0.6	0.648	0.50
Cylinder axis perpendicular to flow	Cylinder diameter	$1 < Re < 4$	> 0.6	0.99	0.33
		$4 < Re < 40$	> 0.6	0.91	0.39
		$40 < Re < 4000$	> 0.6	0.68	0.47
		$4(10)^3 < Re < 4(10)^4$	> 0.6	0.193	0.62
		$4(10)^4 < Re$	> 0.6	0.0266	0.81
Inside pipes	Inside pipe diameter	$10^4 < Re$	0.7 < Pr < 700	0.023	0.80
Outside bank of tubes	Staggered outside tube diameter	$2(10)^3 < Re$	> 0.6	0.33	0.60
	In line	$2(10)^3 < Re$	> 0.6	0.26	0.60

$$U_o = \frac{1}{\frac{1}{h_o} + \frac{D_o}{D_i \bullet h_i} + \frac{D_o \bullet ln\,(D_o/D_m)}{2 \bullet k_o} + \frac{D_o \bullet ln(D_m/D_i)}{2 \bullet k_i} + rf_o + rf_i \bullet \frac{D_o}{D_i}}$$

$$= \frac{1}{\frac{1}{h_o} + \frac{d_o}{d_i \bullet h_i} + \frac{d_o \bullet ln\,(d_o/d_m)}{24 \bullet k_o} + \frac{d_o \bullet ln(d_m/d_i)}{24 \bullet k_i} + rf_o + rf_i \bullet \frac{d_o}{d_i}} \qquad \textbf{Eq 8-11}$$

When there is only one solid layer, delete the fourth term in Equation 8-11 and change the subscript m to i and delete the subscript on k in the third term.

Example 8-4 — Find the overall heat transfer coefficient for a 3 in. Sch 80 pipe submerged in a 190°F water bath. 10 MMscfd of 2000 psia natural gas is to be heated from 60 to 84°F. Refer to Examples 8-2 and 8-3; note that the heat flow through the pipe wall is similar to Example 8-1.

Solution Steps

Use h_i, h_o, and the conduction through the pipe wall to find U_o. Then check the heat fluxes to see that the right film temperatures were used. k = 26.2 Btu/[(hr • sq ft • °F)/ft] for the pipe wall at 109°F (value from Fig. 8-8). Assume clean pipe.

From Eq 8-11

$$U_o = \frac{1}{\left[\frac{1}{122.6} + \left(\frac{3.50}{2.90\,(349.9)}\right) + \frac{3.50 \bullet ln\,(3.50\,/2.90)}{24\,(26.2)}\right]}$$

$$U_o = 79.0 \text{ Btu /(hr} \bullet \text{sq ft} \bullet \text{°F)}$$

$$Q = U_o\, A_o\, \Delta T_{LM} = 79.0\left(\pi\frac{3.5}{12}\right)\frac{(190-60)-(190-84)}{ln\left(\frac{130}{106}\right)}$$

$$= 8516 \text{ Btu/hr per linear ft}$$

To confirm the film temperatures and the validity of the individual heat transfer coefficients, the heat fluxes outside, through, and inside the pipe must be compared with the overall heat flux. Consider one linear foot of pipe. At the average gas temperature of 72°F, calculate the fluxes for one linear foot of pipe.

$$Q_o = h_o\, A_o\, \Delta T_o = (122.6)\left(\pi\frac{3.5}{12}\right)(190-114)$$

$$= 8538 \text{ Btu/hr per linear ft}$$

$$Q_p = \frac{2 \bullet \pi \bullet L \bullet k \bullet \Delta T}{ln\,(d_o/d_i)} = \frac{(2)\,(3.14)(1)(26.2)(114-104)}{ln\,(3.50\,/\,2.90)}$$

$$= 8749 \text{ Btu/hr per linear ft}$$

$$Q_i = h_i\, A_i\, \Delta T_i = 350.1\left(\pi\frac{2.9}{12}\right)(104-72)$$

$$= 8506 \text{ Btu/hr per linear ft}$$

The agreement is close enough for purposes of this example.

The above refers to clean pipes. Fouling occurs with continued use. Sometimes, fouling factors are specified, e.g., 0.001 internally and externally. These are corrections that are added to $1/U_o$. So,

$$1/U_o = 0.01265 + 0.001 + \left(\frac{3.50}{2.90}\right)(0.001)$$

$$U_o = 67.3 \text{ Btu/(hr} \bullet \text{sq ft} \bullet \text{°F)}$$

Finned Tubes

When combustion gases flow externally and heat a liquid in a pipe, there is a significant disparity between h_i (usually over 150 Btu/[hr • sq ft • °F]) and h_o (usually less than 10 Btu/[hr• sq ft • °F]). To overcome this and make better use of a given length of pipe, the external surface is finned. When the gas flow is normal to the pipe axis, helical fins (typically 0.05 to 0.105 in. thick, 0.5 to 1.5 in. high, and 24 to 72 fins/ft) are used. The result is an increase of up to tenfold in the external area of the pipe.

The total external surface area of a finned pipe and the cross sectional or projected area restricting normal gas flow per linear foot are:

$$A_o = \frac{\pi \bullet d_o}{12}\,(1 - n \bullet t/12) + \left(\frac{n \bullet \pi}{2}\right)\left(\frac{(d_f^2 - d_o^2)}{144}\right) \qquad \textbf{Eq 8-12}$$

and

$$A_{cs} = \frac{d_o}{12} + \frac{n \bullet t\,(d_f - d_o)}{144} \qquad \textbf{Eq 8-13}$$

The surface area of the fins is not as efficient as the external surface of the pipe because heat absorbed at the fin surface must be conducted to the fin base before it can pass through the pipe wall. Fin efficiencies are given in Fig. 8-6. These efficiencies are applied to the total external area.

Another important consideration is fin tip temperature. This can be obtained from the fin efficiency and Fig. 8-7. Fig. 8-8 gives the thermal conductivities and maximum recommended fin tip temperatures for the more common ferrous construction materials.

Example 8-5 — Calculate the external surface area and fin efficiency for 4 in. Sch 80 pipe with the following finning: 36 fins/ft, 1.25 in. high, 0.105 in. thick. Assume h_o = 3.9 Btu/(hr • sq ft • °F), k_f = 25 Btu/[(hr • sq ft • °F)/ft].

Solution Steps

Abscissa in Fig. 8-6:

$$0.4\, H_f \sqrt{\frac{h_o}{k_f\, t}} = 0.4\,(1.25)\sqrt{\frac{3.9}{(25)\,(0.105)}} = 0.61$$

$$d_f = d_o + 2\, H_f = 4.5 + 2\,(1.25) = 7.0 \text{ in.}$$

$$\frac{d_f}{d_o} = \frac{7.0}{4.5} = 1.56$$

From Fig. 8-6, fin efficiency is 87%.

From Eq 8-12:

$$A_o = \pi\left(\frac{4.5}{12}\right)\left(1 - \frac{(36)\,(0.105)}{12}\right) + \frac{36}{2}\,\pi\left(\frac{7.0^2 - 4.5^2}{144}\right)$$

$$= 12.10 \text{ sq ft per linear ft}$$

Radiation

An estimate of the radiant heat flux between two surfaces is:

$$\frac{Q}{A} = \frac{\sigma \bullet F\,(T_1^{\,4} - T_2^{\,4})}{(1/\varepsilon_1 + 1/\varepsilon_2 - 1)} \qquad \textbf{Eq 8-14}$$

The geometric or view factor, F, is the fraction of the surface area that is exposed to and absorbs radiant heat. The equation for F must be determined from an analysis of the geometry. In using Eq 8-14, it is recommended[6] that F not be less than 0.67. Also, all temperatures are absolute.

Fig. 8-9 gives the emissivities of common construction metals, oxides, refractories, and insulation materials. The emissivity of combustion gases is more complex because it depends on the temperature and the product (P • L). See Figs. 8-10, 8-11, and 8-12.

FIG. 8-6

Fin Efficiency Chart[4]

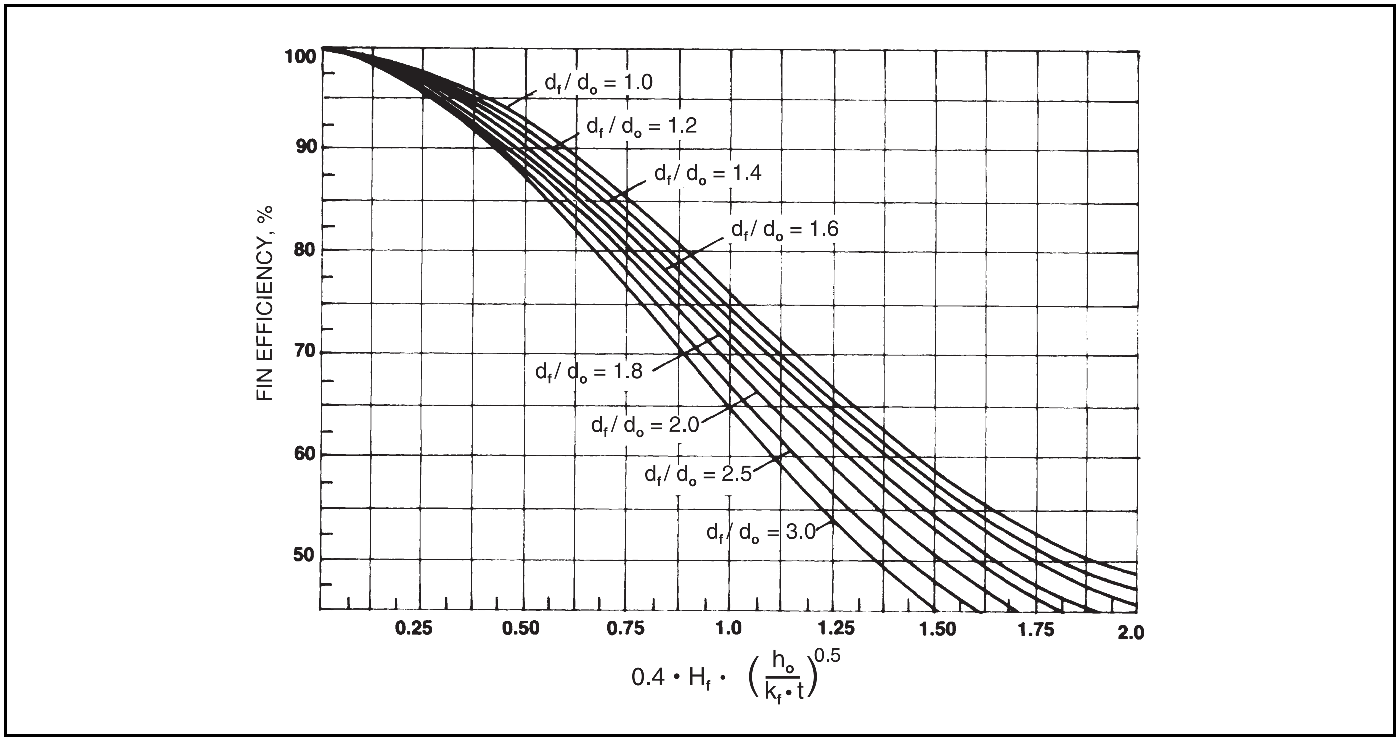

Example 8-6 — What is the radiant heat flux to a 3 ft length of a 2 ft ID firetube when the combustion gases inside the tube are at 2800°F and the firetube wall is at 300°F? Assume 20% excess air is used.

Solution Steps

$$F = \frac{\text{curved surface area}}{\text{total surface area}} = \frac{\pi \bullet D \bullet L}{\pi \bullet D \bullet L + 2\,(\pi \bullet D^2/4)}$$

$$= \frac{2\,(3)}{2\,(3) + 2\,(4/4)} = 0.75$$

From Fig. 8-10, $P_{CO_2 + H_2O} = 0.24$

From Fig. 8-11, $L = 2.0$ ft, so $P \bullet L = 0.48$

From Fig. 8-12, $\varepsilon_1 = 0.12$

From Fig. 8-9, $\varepsilon_2 = 0.79$ (steel, oxidized at 1100°F)

Equation 8-14, $$\frac{Q}{A} = \frac{0.173\,(10^{-8})\,0.75\,(3260^4 - 760^4)}{(1/0.12 + 1/0.79 - 1)}$$

$$= 16{,}990 \text{ Btu/(hr} \bullet \text{sq ft)}$$

Note that T is in °R.

Heat Losses

Heat losses from equipment surfaces occur primarily by radiation and convection. Fig. 8-13 gives the combined heat transfer coefficient, h_c+h_r, in terms of the wind velocity and the temperature difference between the surface and the surrounding air.

Example 8-7 — How much heat can be saved per linear foot by covering an 8 in. Sch 40 steam header, carrying 15 psig steam at 250°F, with a 1 in. thick layer of block insulation? Assume ambient conditions are 30°F with a 15 mph wind.

FIG. 8-7

Fin Tip Temperature[5]

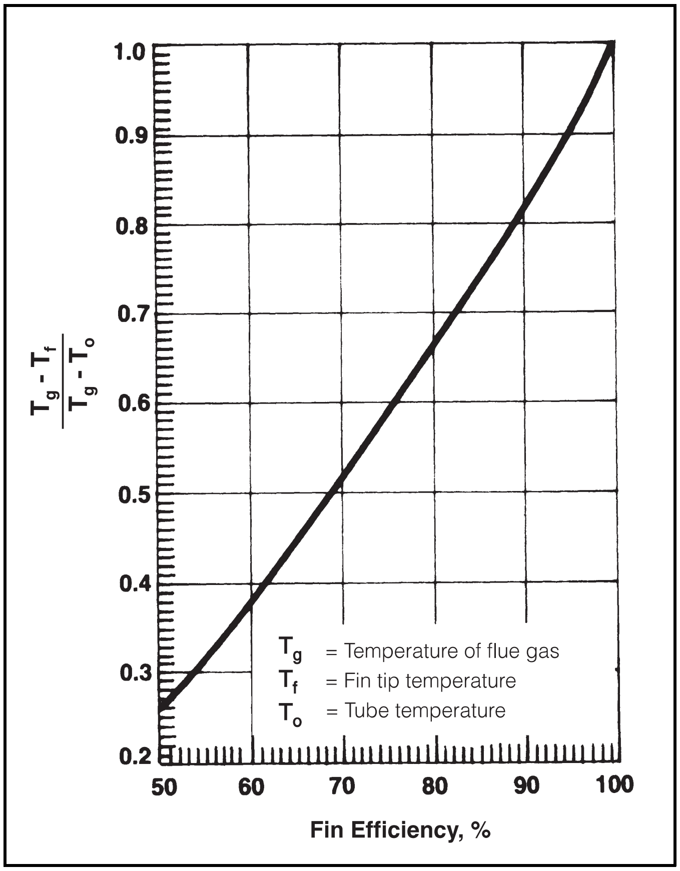

FIG. 8-8

Thermal Conductivity of Ferrous Materials[4]

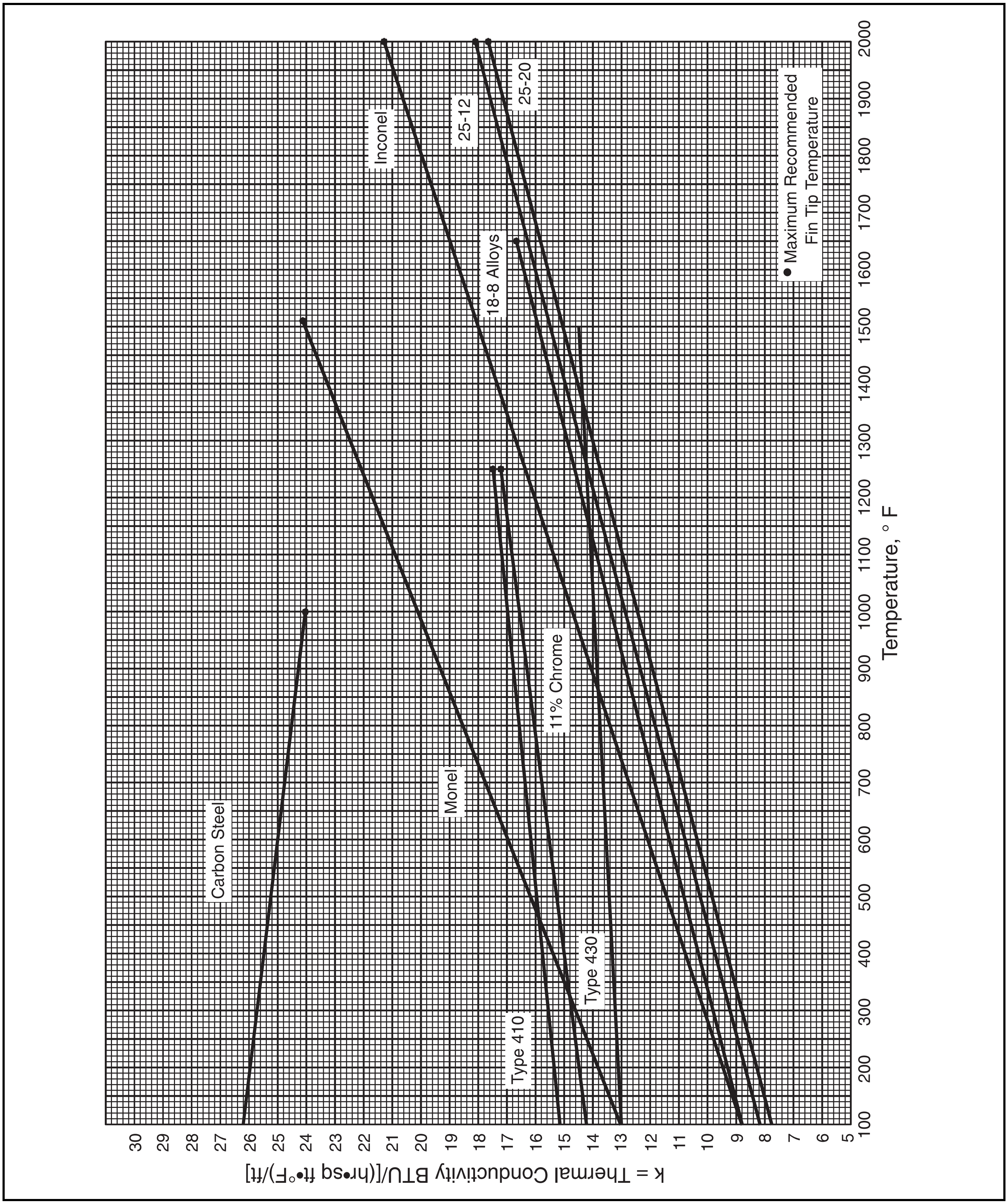

FIG. 8-9

Normal Total Emissivity of Various Surfaces[3]

A. Metals and Their Oxides

Surface	T, °F*	Emissivity*
Aluminum		
Highly polished plate, 98.3% pure	440-1070	0.039-0.057
Polished plate	73	0.040
Rough plate	78	0.055
Oxidized at 1110°F	390-1110	0.11-0.19
Aluminum-surfaced roofing	100	0.216
Calorized surfaces, heated at 1110°F:		
Copper	390-1110	0.18-0.19
Steel	390-1110	0.52-0.57
Brass		
Highly polished:		
73.2% Cu, 26.7% Zn	476-674	0.028-0.031
62.4% Cu, 36.8% Zn, 0.4% Pb, 0.3% Al	494-710	0.033-0.037
82.9% Cu, 17.0% Zn	530	0.030
Chromium; (see Nickel Alloys for Ni-Cr steels)	100-1000	0.08-0.26
Copper		
Commercial, emeried, polished, but pits remaining	66	0.030
Commercial, scraped shiny but not mirror-like	72	0.072
Polished	242	0.023
Plate, heated long time, covered with thick oxide layer	77	0.78
Cuprous oxide	1470-2010	0.66-0.54
Iron and steel		
Metallic surfaces (or very thin oxide layer):		
Cast iron, polished	392	0.21
Ground sheet steel	1720-2010	0.55-0.61
Smooth sheet iron	1650-1900	0.55-0.60
Oxidized surfaces:		
Iron plate, pickled, then rusted red	68	0.612
Completely rusted	67	0.685
Rolled sheet steel	70	0.657
Oxidized iron	212	0.736
Cast iron, oxidized at 1100°F	390-1110	0.64-0.78
Steel, oxidized at 1100°F	390-1110	0.79
Iron oxide	930-2190	0.85-0.89
Sheet steel, strong rough oxide layer	75	0.80
Dense shiny oxide layer	75	0.82
Cast plate:		
Smooth	73	0.80
Rough	73	0.82
Cast iron, rough, strongly oxidized	100-480	0.95
Wrought iron, dull oxidized	70-680	0.94
Steel plate, rough	100-700	0.94-0.97
High temperature alloy steels (see Nickel Alloys)		
Monel metal, oxidized at 1110°F	390-1110	0.41-0.46
Nickel		
Electroplated on pickled iron, not polished	68	0.11
Plate, oxidized by heating at 1110°F	390-1110	0.37-0.48
Nickel oxide	1200-2290	0.59-0.86
Nickel alloys		
Chromnickel	125-1894	0.64-0.76
Nickelin (18-32 Ni; 55-68 Cu; 20 Zn), gray oxidized	70	0.262
KA-2S alloy steel – (8% Ni; 18% Cr), light silvery, rough, brown, after heating	420-914	0.44-0.36
After 42 hr. heating at 980°F	420-980	0.62-0.73
NCT-3 alloy (20% Ni; 25% Cr), brown, splotched, oxidized from service	420-980	0.90-0.97
NCT-6 alloy (60% Ni; 12% Cr), smooth, black, firm adhesive oxide coat from service	520-1045	0.89-0.82
Tin – bright tinned iron sheet	76	0.043 & 0.064
Zinc		
Commercial, 99.1% pure, polished	440-620	0.045-0.053
Oxidized by heating at 750°F	750	0.11
Galvanized sheet iron, fairly bright	82	0.228
Galvanized sheet iron, gray oxidized	75	0.276

B. Refractories, Building Materials, Paints, and Miscellaneous

Surface	T, °F*	Emissivity*
Asbestos		
Board	74	0.96
Paper	100-700	0.93-0.945
Brick		
Red, rough, but no gross irregularities	70	0.93
Silica, unglazed, rough	1832	0.80
Silica, glazed, rough	2012	0.85
Grog brick, glazed	2012	0.75
See Refractory Materials below.		
Carbon		
T-carbon (Gebr. Siemens) 0.9% ash (this started with emissivity at 260°F of 0.72, but on heating changed to values given)	260-1160	0.81-0.79
Enamel, white fused, on iron	66	0.897
Glass, smooth	72	0.937
Gypsum, 0.02 in. thick on smooth or blackened plate	70	0.903
Marble, light gray, polished	72	0.931
Oak, planed	70	0.895
Oil layers on polished nickel (lube oil)	68	
Polished surface, alone		0.045
+0.001-in. oil		0.27
+0.002-in. oil		0.46
+0.005-in. oil		0.72
Infinitely thick oil layer		0.82
Oil layers on aluminum foil (linseed oil)		
Al foil	212	0.087†
+1 coat oil	212	0.561
+2 coats oil	212	0.574
Paints, lacquers, varnishes		
Snowhite enamel varnish on rough iron plate	73	0.906
Black shiny lacquer, sprayed on iron	76	0.875
Black shiny shellac on tinned iron sheet	70	0.821
Black matte shellac	170-295	0.91
Black lacquer	100-200	0.80-0.95
Flat black lacquer	100-200	0.96-0.98
White lacquer	100-200	0.80-0.95
Oil paints, sixteen different, all colors	212	0.92-0.96
Aluminum paints and lacquers		
10% Al, 22% lacquer body, on rough or smooth surface	212	0.52
26% Al, 27% lacquer body, on rough or smooth surface	212	0.3
Other Al paints, varying age and Al content	212	0.27-0.67
Al lacquer, varnish binder, on rough plate	70	0.39
Al paint, after heating to 620°F	300-600	0.35
Plaster, rough lime	50-190	0.91
Porcelain, glazed	72	0.924
Quartz, rough, fused	70	0.932
Refractory materials, 40 different	1110-1830	
poor radiators		0.65-0.75 0.70
good radiators		0.80-0.85 0.85-0.90
Roofing paper	69	0.91
Rubber		
Hard, glossy plate	74	0.945
Soft, gray, rough (reclaimed)	76	0.859
Water	32-212	0.95-0.963

* When two temperatures and two emissivities are given, they correspond, first to first and second to second, and linear interpolation is permissible.

† Although this value is probably high, it is given for comparison with the data, by the same investigator, to show the effect of oil layers. See Aluminum, part A of this table.

Solution Steps

Using Fig. 8-13 the heat loss from the bare pipe is:

$$Q = (h_c + h_r)\,A_o\,(T_p - T_a) = (5.85)\,\frac{(\pi\ 8.625)}{12}\,(250 - 30)$$

$$= 2906 \text{ Btu/hr per linear ft}$$

For the insulated pipe, assume the outside surface of the insulation is at 50°F. Then from Fig. 8-13:

$$h_c + h_r = 4.5 \text{ Btu/(hr} \bullet \text{sq ft} \bullet {}^\circ\text{F)}$$

$$Q = (4.5)\,\frac{(\pi\ 10.625)}{12}\,(50 - 30) = 250 \text{ Btu/hr per linear ft}$$

This agrees closely enough with the heat flow through the insulation — Example 8-1.

Heat saved = 2906 – 250 = 2656 Btu/hr per linear ft

FIG. 8-10

Partial Pressure of CO_2 Plus H_2O

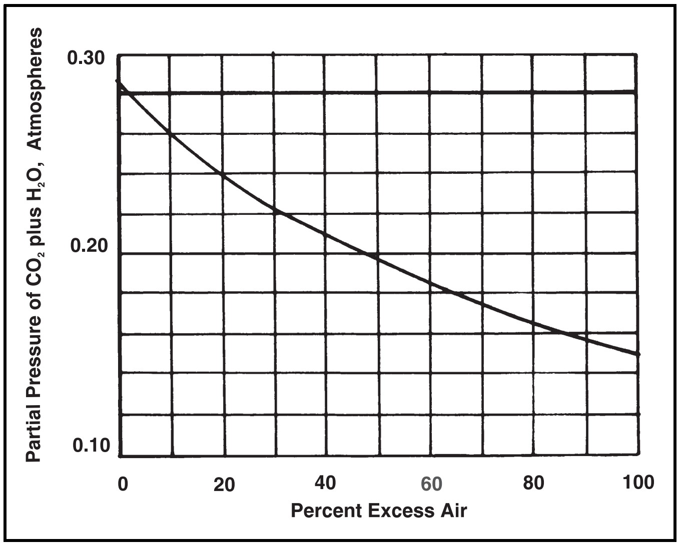

FIG. 8-11

Beam Length for Gas Radiation[8]

Dimension Ratio	Mean Beam Length, L
Rectangular Furnaces, Length-Width-Height, In Any Order	
1-1-1 to 1-1-3 1-2-1 to 1-2-4	$(2/3)\ (\text{Furnace Volume})^{1/3}$
1-1-4 to 1-1-∞	(1) (Smallest Dimension)
1-2-5 to 1-2-∞	(1.3) (Smallest Dimension)
1-3-3 to 1-∞-∞	(1.8) (Smallest Dimension)
Cylindrical Furnaces, Diameter-Height	
1-1	(2/3) (Diameter)
1-2 to 1-∞	(1) (Diameter)

FIG. 8-12

Gas Emissivity[10]

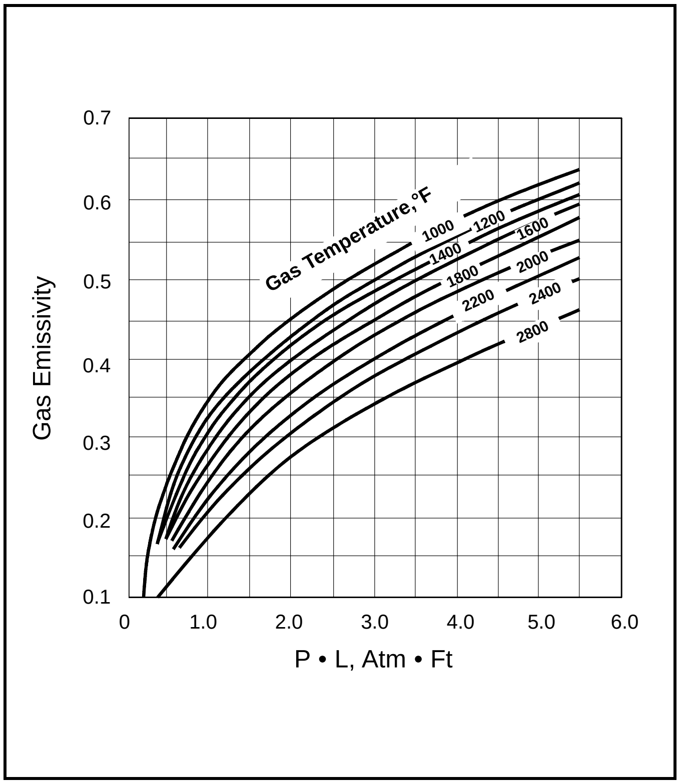

FIG. 8-13

Combination Convection and Radiation Film Coefficients for Air in Contact with Vertical Walls or Surfaces[11]

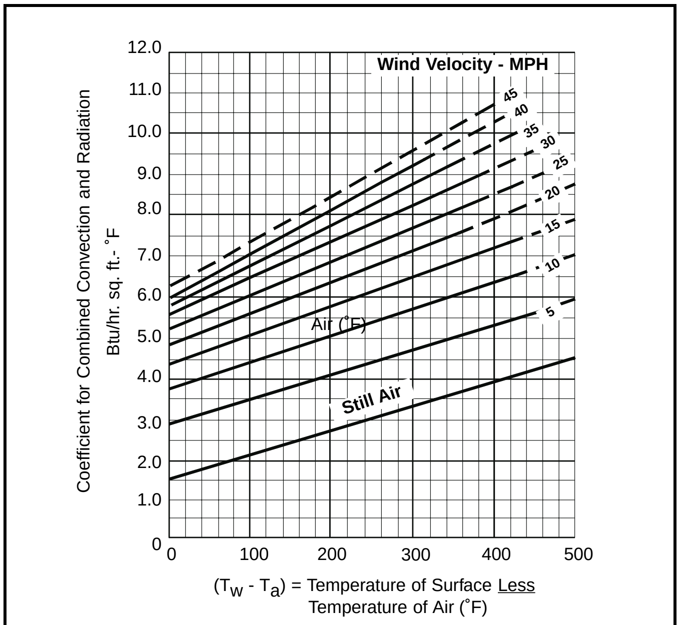

$$h = 16.49 - 23.68 \bullet (\text{MPH} + 8.8)^{-0.21}$$
$$+ (0.006024 + 1.79 \bullet 10^{-5}$$
$$- 0.5 \bullet \text{MPH}^{1.515}) \bullet (T_w - T_a)$$

COMBUSTION

Combustion is the rapid chemical reaction between oxygen and a combustible material that releases heat and light. Usually the combustible material is a hydrocarbon and ambient air supplies the oxygen. Complete combustion occurs when there is sufficient oxygen to convert all of the carbon to carbon dioxide and all of the hydrogen to water. Incomplete combustion means that there is either unburned or partially reacted fuel, i.e., carbon monoxide, hydrogen, etc.

Methane is the main constituent of natural gas. It reacts with oxygen to form carbon dioxide and water.

$$CH_4 + 2\,O_2 \rightarrow CO_2 + 2\,H_2O$$

This stoichiometry is typical of all hydrocarbons. One atom of carbon requires one molecule of oxygen and four atoms of hydrogen require one molecule of oxygen. The theoretical air is that needed for complete combustion of the carbon and hydrogen, i.e., two molecules of oxygen for one molecule of methane. Excess air is that supplied in addition to what is required. For example, 20% excess air means that the air supplied is 1.2 times the stoichiometric amount.

The following reaction represents the complete combustion in oxygen of an arbitrary carbon-based fuel compound. For combustion in air, add N_2 to both sides of the reaction equation in an amount equal to the oxygen input multiplied by 3.774.

$$C_cH_{hy}O_oS_sN_{ni} + \left(c + \frac{hy}{4} - \frac{o}{2} + s\right)O_2 \rightarrow$$

$$(c)\ CO_2 + \left(\frac{hy}{2}\right)H_2O + (s)\ SO_2 + \left(\frac{ni}{2}\right)N_2$$

Fig. 8-14 shows how the composition of the flue gases depends on the amount of combustion air.

Air Requirements

Fig. 8-15a shows the scf of dry air needed per scf of paraffinic hydrocarbons for complete combustion in terms of the specific gravity of the fuel. In using this figure any inert components in the fuel, e.g., nitrogen, carbon dioxide, etc., must be excluded. Fig. 8-15b shows the mass of humid air required per mass of dry air at 760 mm Hg and percent relative humidity.

Air is about 20.9% oxygen on a dry basis, hence 4.77 mols (or scf) of air supply 1.0 mol (or scf) of oxygen. Applying this to methane, 9.54 mol (or scf) of air are needed for every mol (or scf) of methane.

The effect of water vapor in the air is relatively small at low and moderate temperatures. Saturated air at 60°F contains 1.75% water. Still this should be considered and 2-3% more air is usually added if exact calculations are not made. The water content in saturated air increases rapidly with temperature; e.g. at 100°F saturated air contains about 6.5% water, and at 115°F it contains about 10%.

Some situations may yield a higher amount of water vapor coming from the combustion air and fuel gas. Consider the complete combustion of 1 mol of water saturated methane at 100°F and 15 psig with 20% excess air with air also water saturated at 100°F. This situation introduces 0.79 mol of water from the air and 0.032 mol of water from the gas. Additionally, 2 mols of water from the methane combustion is added water resulting in approximately 21% water in the flue gas of which 30% is from the air and gas humidity. Also, steam or water addition for NO_x control introduces more water vapor to the flue gas. These situations increase the wet bulb temperature of the flue gas. Water condensation should be considered in mass and energy balances and excess air calculations. Errors in consideration of water vapor content and air temperature may cancel a 10% excess air calculation, resulting in incomplete fuel combustion. Designs and operations should consider local weather conditions and seasonal changes.

FIG. 8-14

Effect of Fuel/Air Ratio on Flue Gas Analysis for 1108 Btu/SCF Natural Gas (0.63 Gas Gravity) Containing 83% CH_4 and 16% C_2H_6[1]

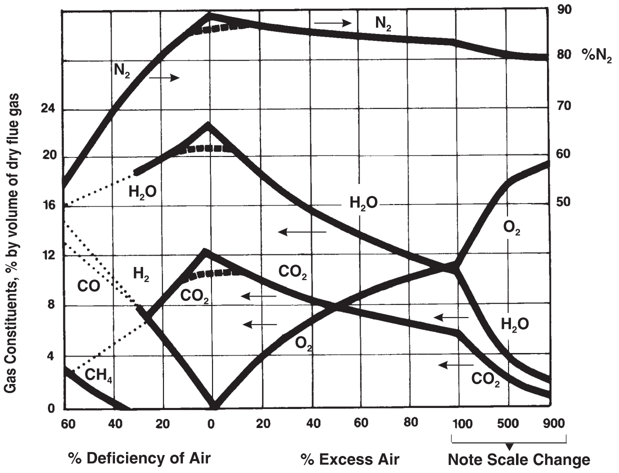

NOTE: Values for rich mixtures depend somewhat on combustion chamber design. The average values shown are within ½% of correct for H_2, CO, and CO_2, but may be as much as 2% low for other constituents. Some external heat is usually required for mixtures with less than 70% aeration (dotted lines). Dashed lines show the trends with poor mixing or quenching. Gas constituent percentages are on a dry basis to allow comparison with gas analyzer readings, that measure the gas volumes after water vapor has condensed out of the sample. With the correct amount of air (10.56 ft^3), each cubic foot of this fuel gas produces 2.14 ft^3 H_2O, 1.15 ft^3 CO_2, 8.39 ft^3 N_2; so $\%CO_2 = 100 \times 1.15\ ft^3\ CO_2 \div (1.15 + 8.39)\ ft^3$ dry flue gas = 12.1%.

The theoretical air requirement of an arbitrary carbon-based fuel compound, in mols of dry air per mol of fuel, can be calculated with the following equation.

$$AO = 4.77 \bullet \left[c + \frac{hy}{4} - \frac{o}{2} + s\right] \qquad \textbf{Eq 8-15}$$

Analysis of the flue gases provides useful information about the actual excess air and the efficiency of fired equipment. The following equations provide the excess air percentage for a sulfur and oxygen free, carbon-based fuel combustion without soot formation. Analysis must be molar and on a dry basis.

$$EA = \frac{Fl_o}{AO}\left[\frac{CO_{2_o}}{CO_2 + CO}\right] \bullet 100$$

$$= \frac{Fl_o}{AO}\left[\frac{O_{2_o}}{20.9 - O_2 + CO}\right] \bullet 100 \qquad \textbf{Eq 8-16}$$

Many forced-draft burners supply a fixed volume of air. Fig. 8-18 shows the effect of ambient temperature and barometric pressure on the amount of air actually delivered.

The air ideal density and ideal relative density changes with the humidity. For the same relative humidity, the hotter the air, the higher the influence of the humidity in the air densities, because of the higher water vapor fraction, as can be seen in Fig. 8-16 and Fig. 8-17. In these graphs the atmosphere

FIG. 8-15a

Standard Cubic Feet of Dry Air Needed per Standard Cubic Foot of Hydrocarbon for Complete Combustion

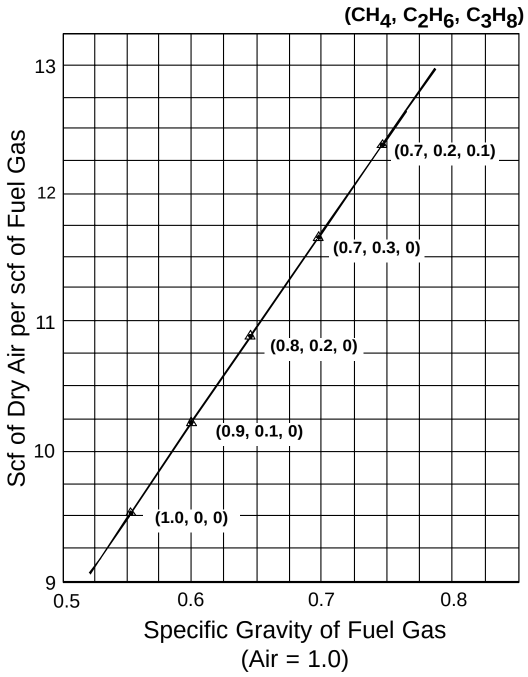

pressure is 760 mm Hg; for other conditions use the equation shown in the graph.

Heating Value

The heating value is the amount of ideal heat released by a unit of fuel, mass or standard volume, during complete combustion, at constant pressure, with the stoichiometric amount of dry air. The fuel humidity must be stated, as well as whether the gas volume is real or ideal. This involves a heat balance at standard conditions of temperature and pressure, (usually 60°F [15°C] and 760 mm Hg).

Hydrogen in the fuel burns to water and when the flue gases are cooled to 60°F, the physical state — either vapor or liquid — of this water must be assumed. So the latent heat of vaporization of the water may or may not be considered to be part of the heating value. The result is two definitions for the heating value. The higher or gross heating value, HHV, includes the heat of condensation and the lower or net heating value, LHV, assumes the water remains in the vapor state.

Fig. 23-2 in the "Physical Properties" section gives the net and gross heating values of most pure hydrocarbons. For mixtures calculate the molar, or volume, average.

The higher, ideal, dry heating value of sweet natural gas at 60°F and 760 mm Hg may be calculated with the following equation:

$$\text{HHV} = 1568.72 \bullet \text{SG} - 2524.88 \bullet X_{CO2} - 1658.37 \bullet X_{N2} + 141.05 \qquad \textbf{Eq 8-17}$$

Where HHV is in Btu/scf, SG is the ideal relative density, and X is the fraction of carbon dioxide and nitrogen if present.

FIG. 8-15b

Mass of Humid Air Per Mass of Dry Air at 760 mm Hg and Percent Relative Humidity

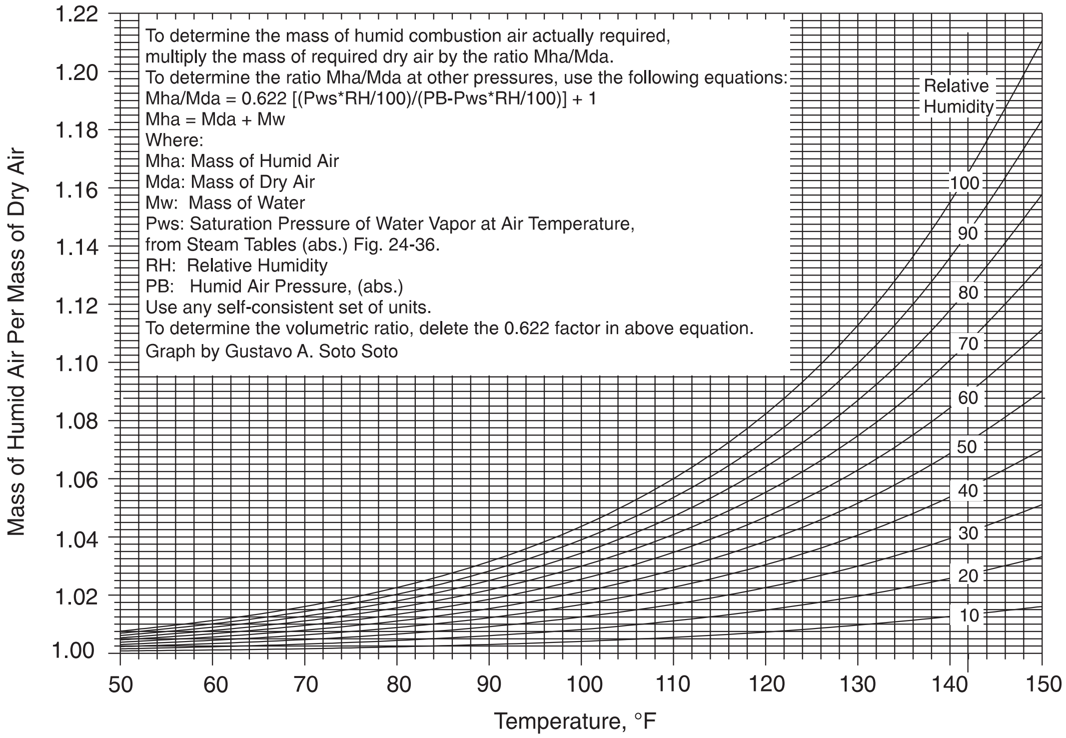

To determine the mass of humid combustion air actually required, multiply the mass of required dry air by the ratio Mha/Mda.
To determine the ratio Mha/Mda at other pressures, use the following equations:
Mha/Mda = 0.622 [(Pws*RH/100)/(PB-Pws*RH/100)] + 1
Mha = Mda + Mw
Where:
Mha: Mass of Humid Air
Mda: Mass of Dry Air
Mw: Mass of Water
Pws: Saturation Pressure of Water Vapor at Air Temperature, from Steam Tables (abs.) Fig. 24-36.
RH: Relative Humidity
PB: Humid Air Pressure, (abs.)
Use any self-consistent set of units.
To determine the volumetric ratio, delete the 0.622 factor in above equation.
Graph by Gustavo A. Soto Soto

FIG. 8-16

Humid Air Ideal Density
760 mm Hg Air Pressure (Absolute) and Indicated Dry-Bulb Temperature and Relative Humidity

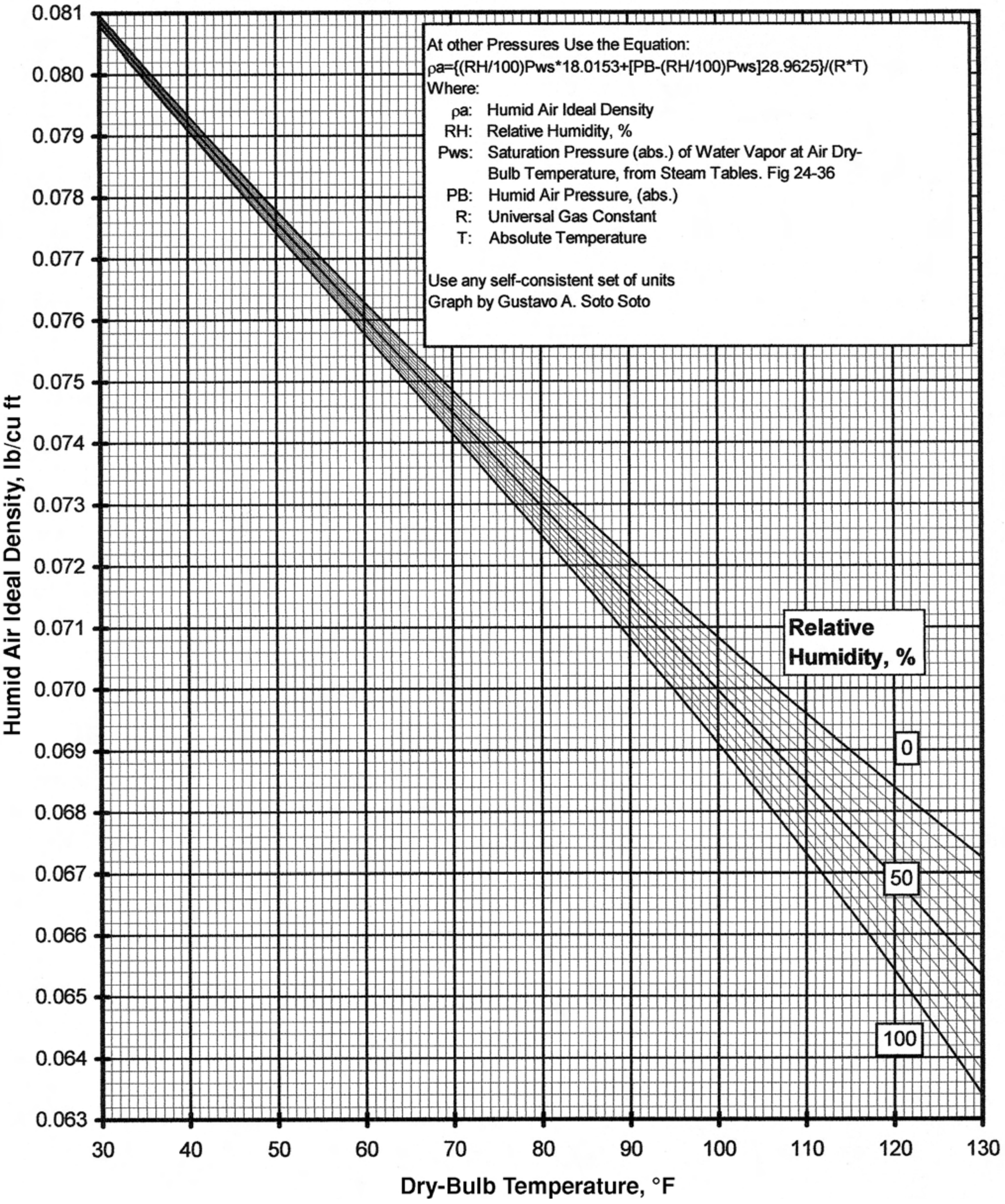

FIG. 8-17

Humid Air Ideal Specific Gravity
760 mm Hg Air Pressure (Absolute) and Indicated Dry-Bulb Temperature and Relative Humidity

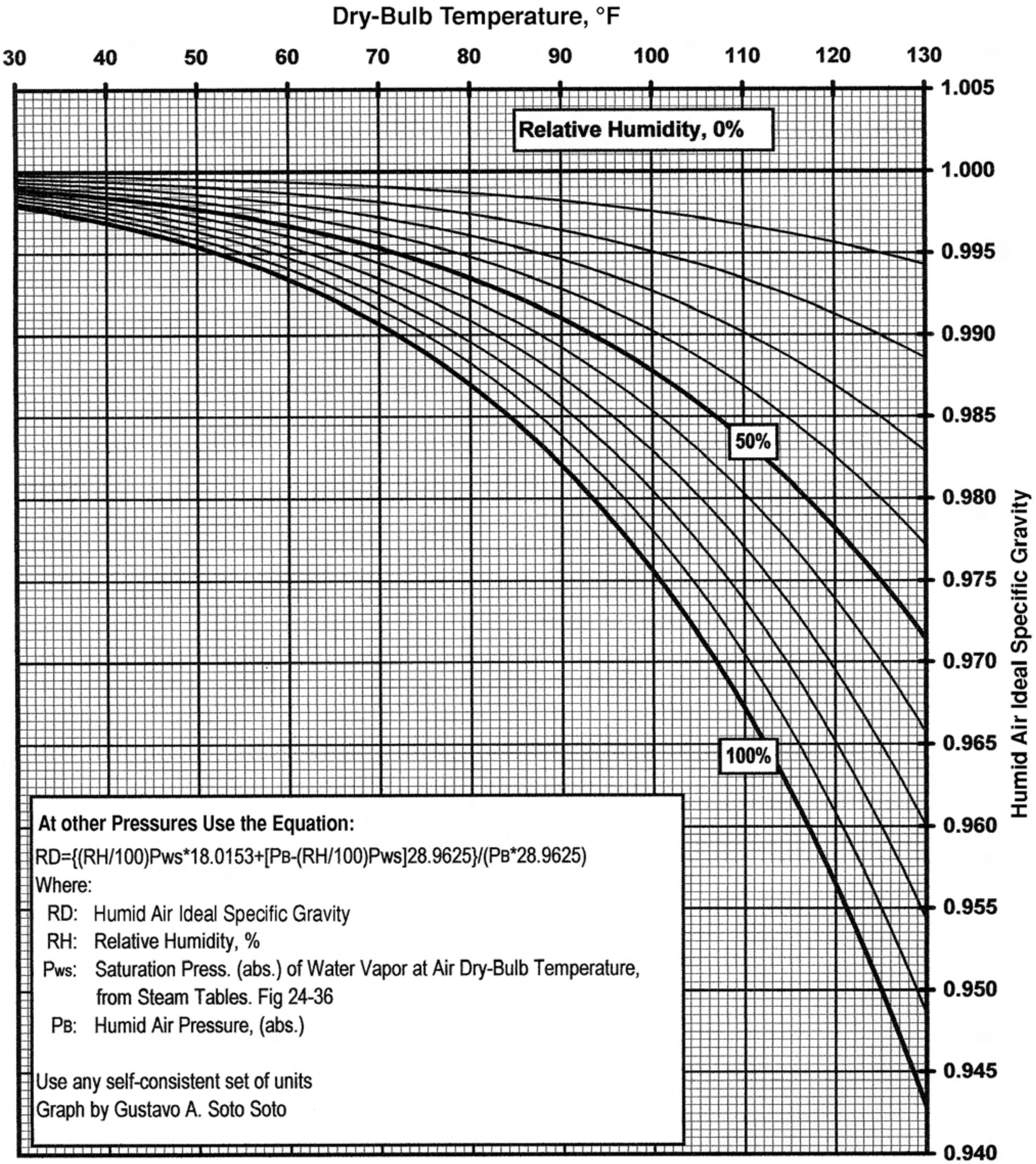

At other Pressures Use the Equation:

$RD=\{(RH/100)P_{ws}*18.0153+[P_B-(RH/100)P_{ws}]28.9625\}/(P_B*28.9625)$

Where:

RD: Humid Air Ideal Specific Gravity

RH: Relative Humidity, %

P_{ws}: Saturation Press. (abs.) of Water Vapor at Air Dry-Bulb Temperature, from Steam Tables. Fig 24-36

P_B: Humid Air Pressure, (abs.)

Use any self-consistent set of units

Graph by Gustavo A. Soto Soto

Thermal Efficiency

The two ways to express the heat released during combustion result in two definitions for the thermal efficiency, gross and net.

$$\text{GTE} = \frac{\text{UHT}}{\text{GHI}} \qquad \textbf{Eq 8-17a}$$

$$\text{NTE} = \frac{\text{UHT}}{\text{NHI}} \qquad \textbf{Eq 8-17b}$$

Therefore NTE exceeds GTE. There is a tendency to use the gross heating value with the net thermal efficiency even though the bases are inconsistent because the numerical values are higher than the corresponding net heating value and gross thermal efficiency.

In the above equations, when GHI and NHI include only the fuel energy input, the efficiency is called Fuel Efficiency. When it also includes the input total enthalpy above the reference temperature of all the incoming streams, the efficiency is called Thermal Efficiency. The total enthalpy must include not only the sensible energy of the combustion air, fuel, and steam, if used, but also the water vapor latent heat. In some high efficiency fired heater and waste-heat-recovery units water from the air, fuel and combustion may condense.

When hot humid fuel and/or air are used, as in the case of using regeneration gas as fuel, after passing the regenerators, the amount of latent heat may be considerable. In the case of using gas turbine exhaust gases in place or in conjunction with fresh air, above the water vapor, due consideration must be given to the CO_2 content in the enthalpy calculations. In the heat balance, care must be taken in defining the thermodynamic volume of control, and the routes of any recirculated or bypassed stream.

Fig. 8-19 shows how the gross thermal efficiency can be determined from the excess air and stack gas temperature. Especially for insulated heaters or furnaces, the combustion efficiency is close to the gross thermal efficiency. The difference is the heat lost through the walls to the surroundings.

The typical enthalpy of the combustion (or stack) gases when natural gas is burned with 20% excess dry air is shown in Fig. 8-20.

Draft

Combustion air is obtained by natural, forced, and induced draft. Natural draft uses the buoyant effect of the hot flue gases in the stack to draw air into the combustion zone. Forced draft is the result of an air blower or fan. Induced draft refers to a blower in the stack.

The draft available (inches of water) from a stack is the natural (or static) draft less the frictional and exhaust gas velocity losses. As defined below, the draft is always negative. The available draft should be sufficient to overcome the head losses in the air inlet registers, convection section tube coils, baffles, damper, and any waste heat recovery devices. Also, it should contain a margin of safety to allow the damper to be in an intermediate position to deal with site conditions such as atmospheric pressure changes, humidity changes, and temperature changes (daily and seasonal variations). Also, the draft should be sufficient to obtain a negative pressure along the entire heater fire side flow path.

In references 35 and 36, information can be found about pressure losses in various devices such as coils, duct transitions, etc. Changes in velocity head should be considered in

FIG. 8-18

Effect of Ambient Temperature and Barometer Pressure on Air Actually Delivered

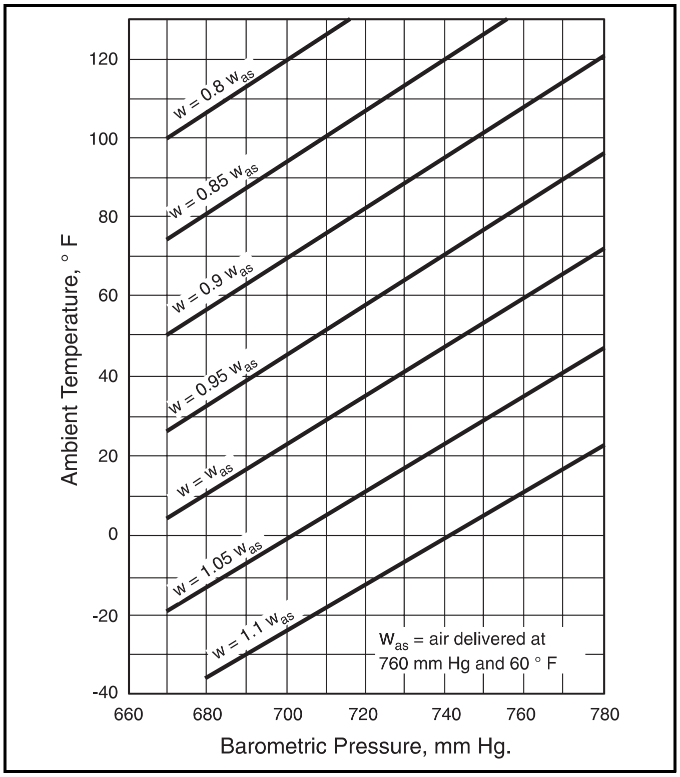

FIG. 8-19

Gross Thermal Efficiency for a Gas with HHV = 1000 Btu/scf

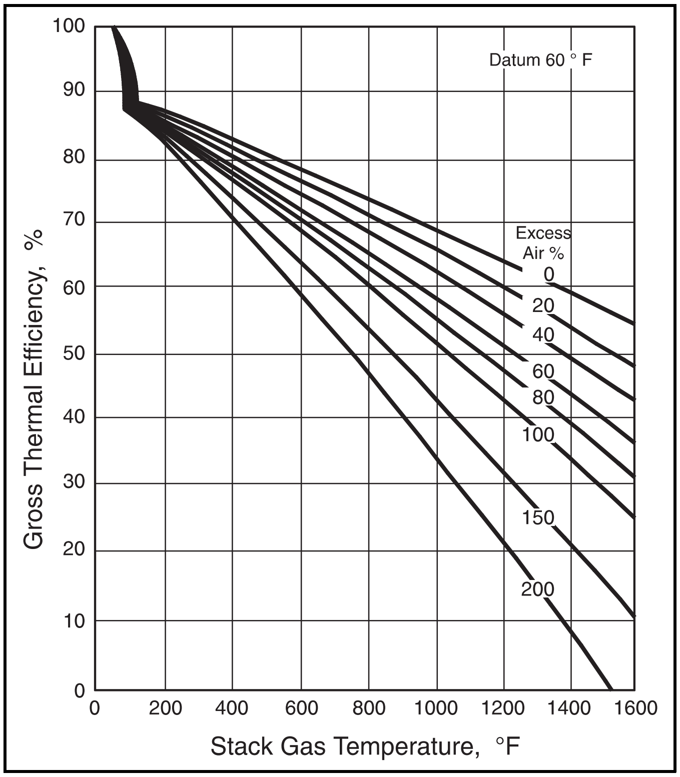

FIG. 8-20

Typical Enthalpy of Combustion Gases for a Dry Natural Gas Fuel and 20% Excess Dry Air

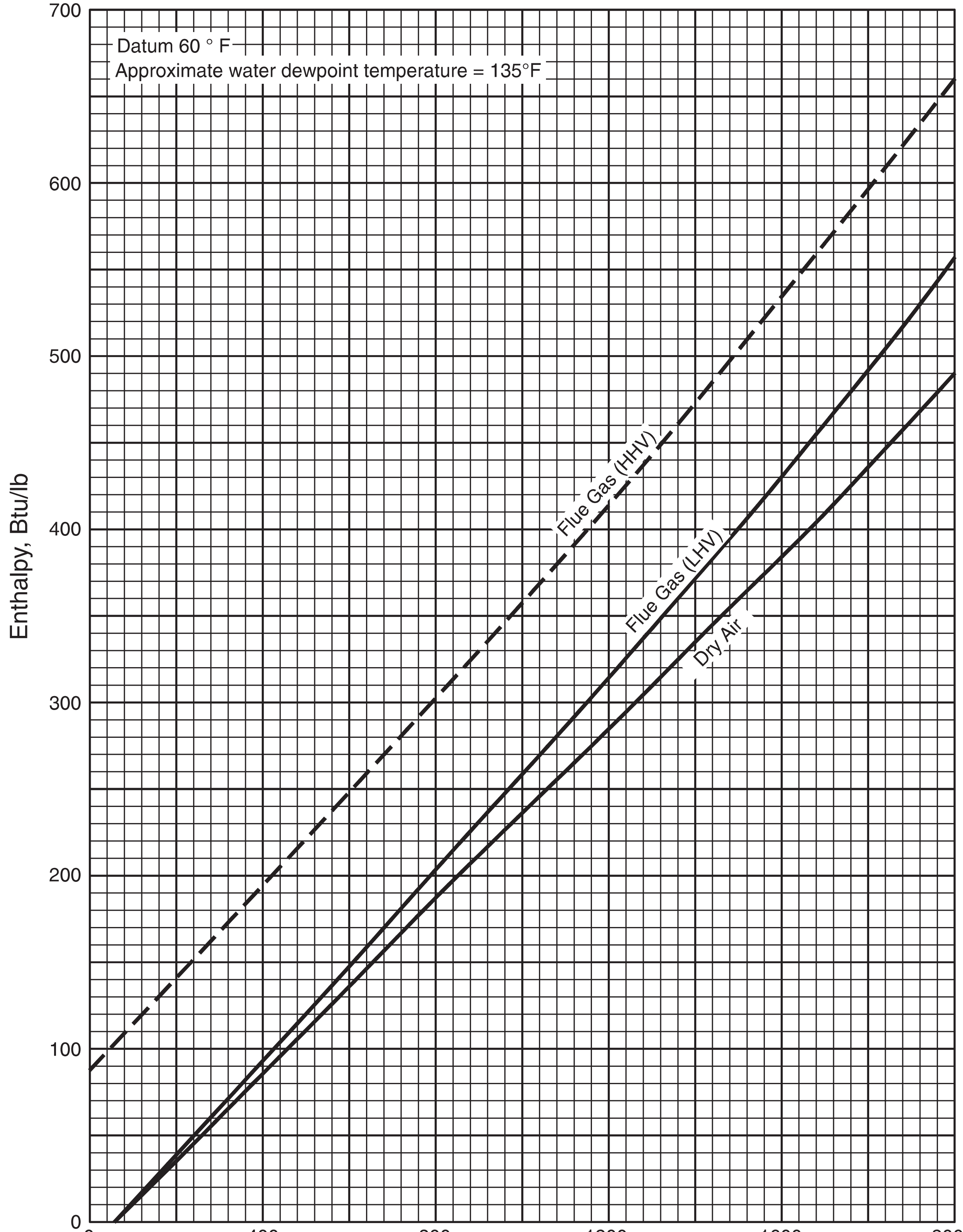

head loss calculations because of the low densities of the air and flue gas. The absolute roughness of the inner stack depends on the material, construction, and lining, if any. The absolute roughness may range from 0.001 to 0.030 ft. The equipment manufacturer should be consulted for more precise values of stack roughness and for other factors which may influence total head loss.

Refer to Fig. 17-2 to determine the Fanning friction factor (f_f) using the Reynolds number determined from Eq. 8-9a and the relative roughness (dimensionless).

$$\begin{aligned} Hav &= 0.192 \bullet H_s \left(\rho_g - \rho_a\right) \\ &\quad + 0.0029 \bullet V^2 \bullet \rho_g \left(4 \bullet f_f \bullet \frac{H_s}{D_s} + 1\right) \end{aligned} \qquad \textbf{Eq 8-18}$$

Also

$$\begin{aligned} Hav &= 0.2545 \bullet H_s \bullet P_B \bullet \left(\frac{SG_g}{T_g} - \frac{SG_a}{T_a}\right) + \\ &\quad + \frac{2.737 \bullet T_g}{P_B \bullet SG_g \bullet D_s^4} \bullet \left(\frac{M}{100{,}000}\right)^2 (4 \bullet f_f \bullet \frac{H_s}{D_s} + 1) \end{aligned} \qquad \textbf{Eq 8-19}$$

Since ρ_g is less than ρ_a, the first term in Eq 8-18 which is the total available driving force, is always negative. This must be decreased by adding the losses from friction and resistance in the second term.

Burners

Four types of burners are commonly used in direct fired heaters:

- **Inspirating pre-mix burners**. The passage of fuel gas through a venturi pulls in the combustion air. These burners have short dense flames that are not affected by wind gusts.
- **Raw gas burners**. Some of the air required for combustion is pulled in by a venturi. The rest of the air is admitted through a secondary air register. These burners have larger turndown ratios, require lower gas pressures, and are also quieter.
- **Low NO_x burners.** Designed to reduce formation of NO_x below levels generated in conventional burners during normal combustion. The most common are fuel staged and air staged to reduce the flame temperature and excess air.
- **Combination gas and oil burners**. An oil burner is added to the gas spider so that fuel oil can also be used. One-tenth pound of steam per pound of fuel is usually required to atomize the oil.
- **Self-recuperative burners.** A heat exchanger in the burner apparatus heats air using the flue gases.
- **Self-regenerative burners.** There is a pair of heat exchanger storing bodies in the burner apparatus; alternatively one body stores the heat from the flue gases, while the other regenerates with the combustion air receiving heat from the flue gases.
- **Submerged combustion burners.** The flame is located in a submerged chamber where heat is transferred to the water and the flue gases are discharged through a bubbling tube into the water.
- **Radiant Wall burners.** The flame is designed to spread across the burner tile and the furnace wall refractory without any forward projection into the firebox.

Burner air registers are sometimes used to control the excess air. Ten to fifteen percent excess air is a compromise for best thermal efficiency and lowest NO_x levels. Air leakage into the heater around sight door openings, header box gaskets, terminal penetrations, etc. should be minimized.

Unmuffled burners have 100 to 110 dBA noise levels. Requirements for 85 or 90 dBA noise levels, measured three feet from the heater, require noise attenuation plenums and orifice mufflers.

Most burners have a continuous pilot flame that releases up to 50 MBtu/hr. The pilot is lit by hand or with a spark plug. The pilot should be left on when:

- The furnace will not overheat during no-flow conditions.
- The fuel is ethane or heavier gases.
- The furnace is used intermittently, e.g., regeneration gas heaters.
- The pilot heat release does not affect furnace turndown ratio.
- The refractory must remain dry for fast start-up.
- Nuisance shutdowns are unavoidable.

Gas Burner Performance

Several factors influence gas burner performance, such as the gas pressure, temperature, and composition that affect heating value, gas density and combustion characteristics; also, the aeration, partial heat load, local altitude, etc. Some typical problems that can occur as a consequence of incorrect burner selection, or from changing operating conditions, or using non-interchangeable gas include flashback, yellow tipping, flame lifting, sooting, and inadequate heat input.

The change in gross heat input through a gas burner orifice caused by changes in the operating conditions and gas composition can be estimated with the following equation, where the pressure and temperature are absolute. The equation can also be used for the lower heating value. The term in parenthesis is called the Wobbe Index, which is a gas interchangeability parameter.

$$\frac{GHI_2}{GHI_1} = \frac{Y_2 \bullet \sqrt{\dfrac{Pg_2 \bullet \Delta P_2}{T_{g2}}} \bullet \left(\dfrac{HHV_2}{\sqrt{SG_2}}\right)}{Y_1 \bullet \sqrt{\dfrac{Pg_1 \bullet \Delta P_1}{T_{g1}}} \bullet \left(\dfrac{HHV_1}{\sqrt{SG_1}}\right)} \qquad \textbf{Eq 8-20}$$

In Eq 8-20 the temperature and pressure are absolute, and the expansion factor (Y) is a function of the burner nozzle characteristics and the fuel inlet and outlet pressures. For low inlet gas pressure the expansion factor is approximately 1, and for small changes in the fuel gas pressure the expansion factors Y_1 and Y_2 have similar values and may be ignored. In other circumstances consult the burner manufacturer for data.

Flue Gas Condensation

Flue gas water condensation may produce corrosion problems caused by acid gases such as SO_2 when present in the flue gas because of the sulfur content of some fuels, and therefore temperature control of the flue gas above the SO_2 dewpoint should be considered. However, highly efficient fired equipment or waste heat recovery equipment burning sweet fuels and/or with acid resistant duct materials may utilize flue gas water condensation taking advantage of its latent heat.

Flue Gas Dew Point

Flue gas normally has high vapor water content, coming from the hydrocarbon combustion, the atmospheric air, and, eventually from steam injected in the heater. The flue gas temperature is reduced by the heat transfer along the heater flow path; and may reach the dew point. This depends on fuel composition, air humidity, excess air, steam injection, heater and heat-recovery units efficiency, gas turbulence and boundary layer behavior. Some oxides from the flue gas dissolve in the condensed water and form acids causing a variation in the dew point. When high-quality sweet fuels are used, the water condensation is not a problem if adequate materials are used. When sour fuels are used the acid formation may cause corrosion problems if the flue gas is not above the dew point.

The following equations may be used to estimate the acid dew point, where the dew points are given in K and partial pressures in mm Hg.[41]

For sulfurous acid:

$$\frac{1000}{T_{DP}} = 3.9526 - 0.1863 \bullet ln\,(P_{H2O}) + 0.000867 \bullet ln\,(P_{SO2})$$

$$- 0.000913 \bullet ln\,(P_{H2O}) \bullet ln\,(P_{SO2})$$

For sulfuric acid:

$$\frac{1000}{T_{DP}} = 2.276 - 0.0294 \bullet ln\,(P_{H2O}) - 0.0858 \bullet ln\,(P_{H2SO4})$$

$$- 0.0062 \bullet ln\,(P_{H2O}) \bullet ln\,(P_{H2SO4})$$

For nitric acid:

$$\frac{1000}{T_{DP}} = 3.6614 - 0.1446 \bullet ln\,(P_{H2O}) - 0.0827 \bullet ln\,(P_{HNO3})$$

$$+ 0.00756 \bullet ln\,(P_{H2O}) \bullet ln\,(P_{HNO3})$$

In feedwater economizer applications, typical acid dew point temperature, minimum allowable stack temperature and minimum allowable feedwater inlet temperature for some fuels are given in the following table:

Acid Dewpoint Temperature of Various Fuels[42]

Fuel	Acid Dewpoint Temperature (°F)	Minimum allowable Stack Temperature (°F)	Minimum Allowable Feedwater Inlet Temp. (°F)
Natural Gas	150	250	210
#2 Oil	180	275	210
Low Sulfur Oil	200	300	220

Courtesy of Kewanee Boiler Manufacturing

API Standard 560[23] recommends the minimum metal temperature for the parts in contact with the flue gases, as a function of the sulfur content in the fuel, as shown in the Fig. 8-21.

FIG. 8-21

Recommended Minimum Metal Temperatures[23]

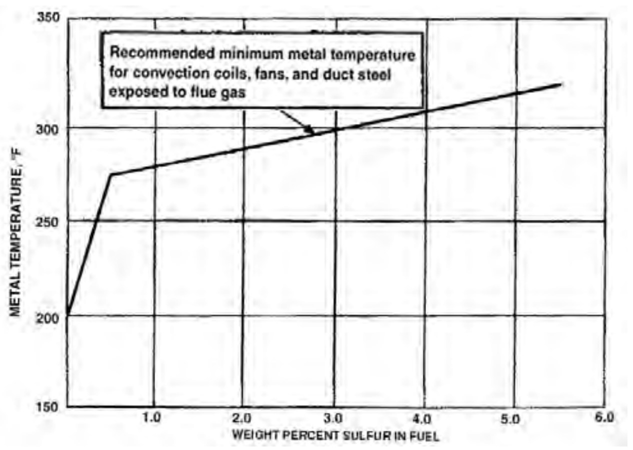

NO_x Control

The main factors influencing NO_x formation are flame temperature, excess air in the flame, time in which combustion gases are at flame temperature, and fuels containing nitrogen compounds.

In natural draft heaters the most common means of changing NO_x emissions is through the use of low NO_x burners. The premix and raw gas burners produce NO_x levels greater than 0.13 lbs NO_x /MMBtu of burner heat release. These are generally used when no NO_x requirement is specified. The upper end of the low NO_x burner design uses a partially staged raw gas burner to achieve levels of 0.08 to 0.12 lbs NO_x /MMBtu. The mid range low NO_x burner design uses staged gas to achieve levels of 0.05 to 0.08 lbs NO_x /MMBtu. For lower NO_x requirements staged gas tips and internal flue gas recirculation are combined to produce NO_x emissions at 0.03 lbs NO_x /MMBtu and below. These numbers are based on clean fuel gas (not oil burning) and are dependent on firebox temperature and excess air.

The current Lowest Achievable Emissions Requirement (LAER) requires NO_x to be less than 9 ppm (at 3% O_2, dry) with future regulations expected to reduce to less than 5 ppm (1 ppm = 0.011 lb NO_x / MMBtu). LAER also requires less than 30 ppm of CO and untralow hydrocarbon emissions.

A staged-air burner is a low NO_x burner in which a portion of the combustion air is injected downstream of the burner block to mix with the combustion products and unburned fuel from the primary combustion zone.

A staged-fuel burner is a low NO_x burner in which a portion of the fuel is mixed with all of the combustion air within the burner block while a second portion of the fuel is injected downstream of the burner block to provide delayed combustion.

The injection of water or steam is also used to reduce the NO_x formation by reduction of the peak flame temperature.

DIRECT FIRED HEATERS

Direct fired heaters vary in size from 0.5 MMBtu/hr small package regeneration gas heaters to 1000 MMBtu/hr steam hydrocarbon reformer heaters. In the gas processing industry, the usual range is 1 to 20 MMBtu/hr.

Types

There are two basic configurations: cylindrical and cabin, see Fig. 8-22. The simplest design is vertical-cylindrical with only radiant tubes. The NTE is about 60% and the stack gas temperature is 1200°F or more. The burner in the floor fires upward. A stainless steel baffle slows the exit flow of the hot gases and reradiates heat back to the top part of the tubes. There is a short stack that usually has no damper. The design is low cost and suited for low cost fuel.

Adding a convection section improves the NTE to about 80%. The radiant section may be either cylindrical or cabin, and the coil configuration either helical or serpentine. These heaters cost more than the all-radiant type but they use less fuel for any given duty.

By cooling the combustion gases to about 300°F, the NTE can be increased to over 90%. This requires either a combustion air preheater using exhaust gas or an additional convection section. These units have the highest capital cost and lowest fuel requirement for any given duty.

Design modifications are used when the tube material is expensive. A bridge wall is installed down the center of the cabin. The radiant tubes are placed above the bridge wall so that they are, in effect, double fired.

Cylindrical or Cabin? Vertical or Horizontal Tubes?

Cylindrical heaters have the following advantages:

- They require the smallest plot area for a given duty.
- The cost is usually 10% to 15% lower in the larger sizes.
- They can accommodate more parallel passes in the process coil.
- For large duties, a cylindrical heater has a taller firebox and more natural draft at the burner.
- The flue gas velocity is usually higher in the convection section, hence, the flue gas film coefficient is higher.
- Fewer expensive tube supports or guides are required in the convection section.
- The noise plenums or preheated combustion air plenums are smaller.
- Fewer soot blowers are required in the convection section. Soot blowers are not needed for gaseous fuel.
- If coil drainage is a problem, a helical coil may be used when there is only one pass.

Cabin heaters have the following advantages:

- The process coil can always be drained.
- Two-phase flow problems are less severe. (Slug flow can generally be avoided.)
- Cabins can accommodate side-firing or end-firing burners instead of only vertically upward firing. This permits the floor of the heater to be closer to the ground. (Some burner manufacturers prefer to fire liquid fuels horizontally.)

FIG. 8-22

Example Cylindrical and Cabin Direct Fired Heaters

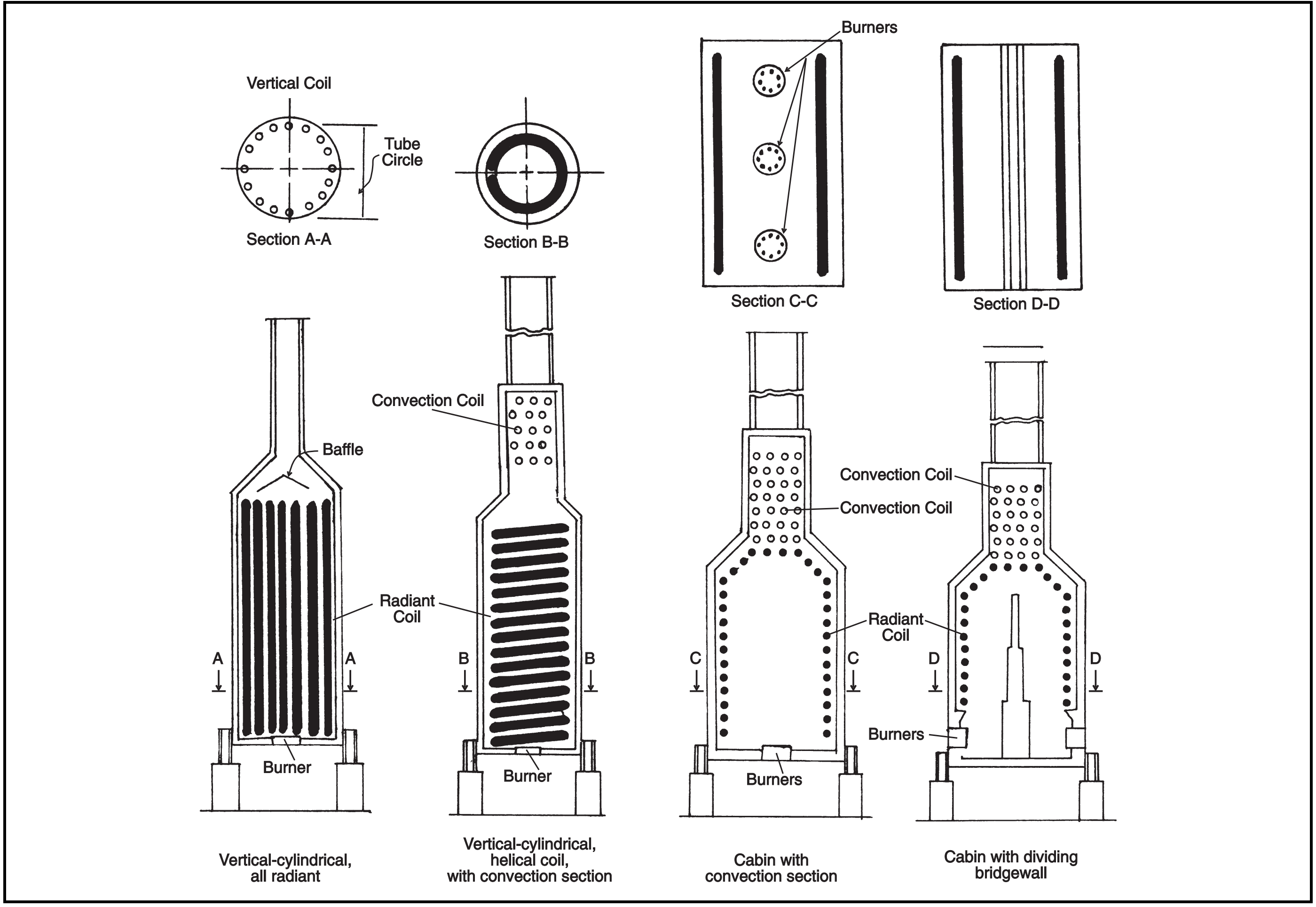

- A smaller capital investment is required when the duty is less than 10 MMBtu/hr.

Radiant Section

The radiant section or firebox should:

- Obtain complete combustion of the fuel with a reasonable amount of excess air, i.e., 10% to 15%.
- Contain the flame and avoid impingement on the tubes.
- Distribute the radiant heat flux.
- Cool the combustion gases to 1500-1900°F to protect the convection section.

The proportions of the firebox are the key to good performance. Generally the flame length should be 60% of the firebox length and the clearance between the flame and tubes at least 1.5 ft. For small cylindrical heaters, the tube circle should be equal to the length of the firebox. For small cabin heaters, the width, height, and tube length should be equal. For large heaters the height of a cylindrical heater is twice the tube circle, and for cabins a good ratio of width to height to length is 1:2:4. The firebox shell is reinforced steel plate. The insulation behind the tubes is usually 5 in. of 1:2:6 lumnite (cement), haydite (aggregate), vermiculite (insulation) castable. The floor is at least 6 in. of 1:2:6 castable, often with a firebrick surface. The bridge wall is always firebrick.

By far the most common tube material is A-106B carbon steel. The nominal size range is 2 to 8 in. with 3 and 4 in. the most prevalent. Short radius return bends are standard and the tubes are usually 1.5 nominal diameters from the refractory wall. For these arrangements, the maximum heat flux directly facing the flame is 1.9 times the average flux. (With long radius return bends the maximum heat flux is 1.45 times the average.) The flux to the front 60° of the tube is 1.8 times the average and the front half-tube flux is 1.5 times the average. Any flux maldistribution due to tall narrow fireboxes or short flames, usually less than 15%, must be added to this. For double firing, the circumferential maldistribution is reduced from 1.8 to 1.25.

Equations 8-21 and 8-22, as well as Fig. 8-23, may be used to obtain an estimate of the absorbed heat in the radiant section of a fired heater, expressed as a fraction of the total net heat liberation, in terms of the average heat flux to the tubes (circumferential), the arrangement of the tubes, and the air to fuel weight ratio. These equations are solutions of the Wilson-Lobo and Hottel equation.

$$B = \frac{d_o \bullet n \bullet \pi \bullet I \bullet G^2}{S \bullet a} \qquad \textbf{Eq 8-21}$$

$$R = 1 - \frac{\sqrt{(B^2 + 70.56 \bullet 10^6 \bullet B)} - B}{35.28 \bullet 10^6} \qquad \textbf{Eq 8-22}$$

FIG. 8-23

Chart to Estimate the Fraction of Total Sensible Heat Liberation That is Absorbed in the Radiant Section of a Direct Fired Heater

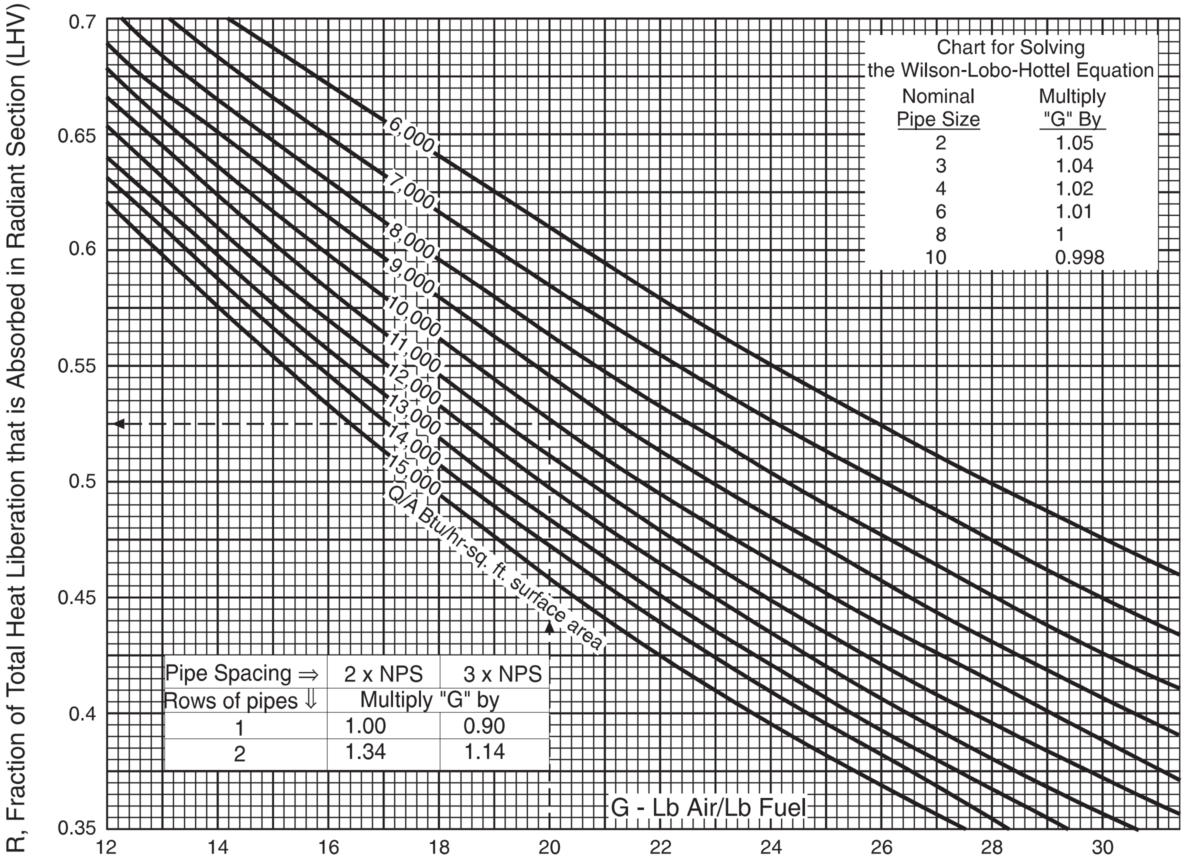

Chart for Solving the Wilson-Lobo-Hottel Equation

Nominal Pipe Size	Multiply "G" By
2	1.05
3	1.04
4	1.02
6	1.01
8	1
10	0.998

Pipe Spacing ⇒	2 x NPS	3 x NPS
Rows of pipes ⇓	Multiply "G" by	
1	1.00	0.90
2	1.34	1.14

where “a” is a constant depending on the arrangement of the tubes. The “a” value is:

	Tube spacing	
No. of rows	2 • NPS	3 • NPS
1	0.88	0.73
2	0.99	0.91

The total heat liberation consists of the lower heating value of the fuel and the sensible heat in combustion air, recirculated flue gas, and fuel and atomizing steam, all heat contents referred to a datum of 60°F.

Fig. 8-23 provides an estimate of the fraction of the total heat liberation that occurs in the radiant section in terms of the allowable heat flux to the tubes. The lb air/lb fuel fired is needed and this can be obtained from either Fig. 8-24 if the LHV of the fuel is known, or by stoichiometry.

Fig. 8-23 is for fired heaters with one row of 8 in. pipes, spaced two pipe nominal sizes (NPS). Correction factors for other designs, to be multiplied by G prior to graph readings, are shown in the figure.

Example 8-8 — Estimate the radiant tube area for a 10 MMBtu/hr regeneration gas heater. To avoid overheating the tubes, a radiant flux of 10,000 Btu/(hr • sq ft) is specified. The design calls for 4 in. Sch 80 tubes on an 8 ft tube circle. The fuel is 0.61 gravity gas with LHV of 1000 Btu/scf. Use 20% excess air.

Fuel gas and combustion air are supplied at 60°F. The heater NTE is 80%. The tubes are arranged in one row at 8" spacing.

Solution Steps

$$r = 970 \text{ lb flue gas/MMBtu} \text{(Fig. 8-24)}.$$

$$r \bullet \text{LHV} = 970\ \frac{\text{lb flue gas}}{\text{MMBtu}} \bullet 1000\ \frac{\text{Btu}}{\text{scf fuel gas}}$$

$$= \frac{970 \text{ lb flue gas}}{1000 \text{ scf fuel gas}}$$

$$\text{Weight of 1000 scf fuel gas} = \frac{(1000)(0.61)(29)}{379.5} = 46.6 \text{ lb}$$

$$\text{Weight of combustion air} = 970 - 46.6 = 923.4 \text{ lb}$$

$$G = 923.4/46.6 = 19.8 \text{ lb air/lb fuel}$$

Using Eq. 8-21

$$B = \frac{(4.5)(1)(3.14)(10{,}000)(19.8^2)}{(8)(0.88)} = 7.87 \bullet 10^6$$

Using Eq 8-22

$$R = 1 - \frac{\sqrt{(7.87 \bullet 10^6)^2 + (70.56 \bullet 10^6)(7.87 \bullet 10^6)} - 7.87 \bullet 10^6}{35.28 \bullet 10^6}$$

R = 0.519 (Note: Fig. 8-23 yields R = 0.525, so use the average of R = 0.522.)

$$Q_r = \frac{\text{UHT} \bullet R}{\text{NTE}} = \frac{(10)(0.522)}{0.8} = 6.525 \text{ MMBtu/hr}$$

$$\text{Heat transfer area} = \frac{Q_r}{I} = \frac{6.525 \bullet 10^6}{10{,}000} = 652.5 \text{ sq ft}$$

The surface area of 4 in. pipe is 1.178 sq ft/linear ft.

$$\text{Total tube length} = 652.5/1.178 = 553.9\text{ft}$$

There are 36 vertical tubes in a cylindrical heater with an 8 ft diameter tube circle when the tubes are 8 in. center to center.

$$\text{Tube length} = 553.9/36 = 15.4 \text{ ft}$$

Convection Section

The purpose of the convection section is to transfer as much heat as possible from the combustion gases leaving the radiant section. As always there is the trade-off between capital cost, i.e., adding more tubes, and operating cost, i.e., improved thermal efficiency.

The construction is similar to that for the radiant section, a steel plate shell with internal castable or ceramic fiber insulation. The tubes are staggered, and the space between the sidewall and the tube is filled with “corbels” to prevent the flue gases from bypassing the end tubes.

The first two rows of the convection section are called shock tubes and they “see” the firebox flame. The first row receives the full radiant heat flux and also some convective heat transfer. It has the highest heat transfer flux in the heater and is always bare tubes. The second shock row receives about one-third of the radiant flux as well as convective heat transfer from the flue gas. It is also bare tubes. If long radius return bends are used, the third row will receive radiant heat and it too should be bare tubes.

Helical fins, sometimes serrated to increase turbulence, are used as soon as possible, i.e., when the fin tip temperature is not excessive, e.g., 1000°F for carbon steel, see Fig. 8-8. Typi-

FIG. 8-24

Flue Gas Rates[9]

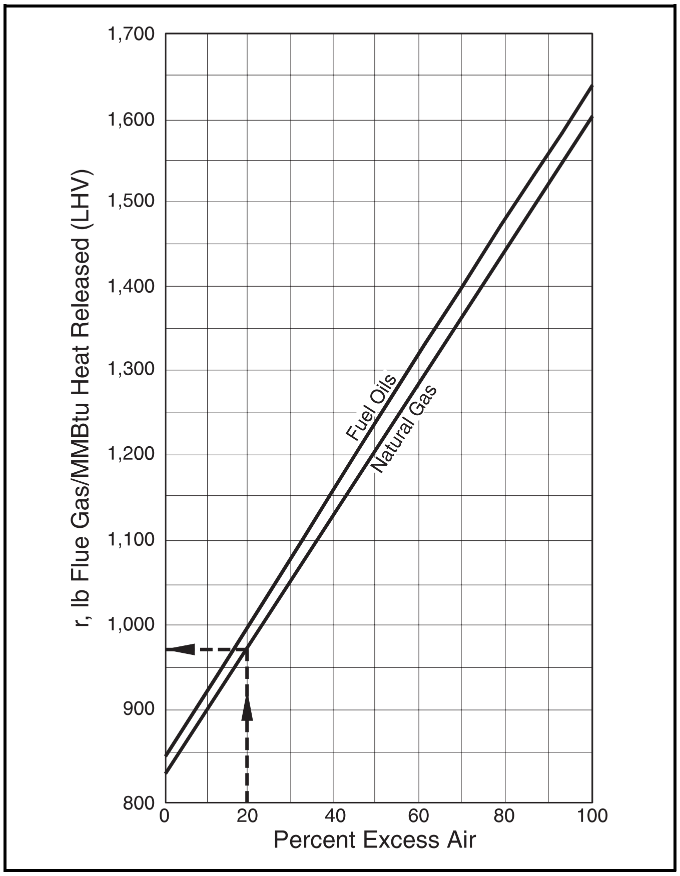

cally when natural gas is the fuel, the fins are 1 in. high, 0.06 in. thick and up to 72 fins per linear ft. For oil fired heaters where soot deposition is possible, the fins are 1 in. high, 0.105 in. thick and not more than 36 fins per ft. Often the first finned row has fewer, shorter, and thicker fins to reduce the fin tip temperature. Where ash and soot fouling are expected, a lane is left every four or five rows for soot blowers. These are tubes equipped with nozzles that direct steam against the tubes. Soot blowing is intermittent and is seldom used more than once every shift.

The fins compensate for the low flue gas heat transfer coefficient. Typically, the heat flux in the convection section is 2000–4000 Btu/(hr • sq ft) of finned surface or 12,000–24,000 Btu/ (hr • sq ft) on a bare tube basis.

Cast iron tube supports can be used below 800°F and 25% chrome – 12% nickel is good up to 2000°F. With high vanadium or sodium levels in the fuel oil, 50% chrome – 50% nickel must be used.

The distance between supports for horizontal tubes should be the lesser of 35 outside tube diameters or 20 ft. The distance between supports on vertical tubes should not exceed either 70 tube diameters or 40 ft. Usually the return bends are external to the tube sheets. This prevents flue gases from bypassing the tube fins.

Fig. 8-25 shows approximate external heat transfer coefficients for 3, 4, and 6 in. steel pipe arranged in staggered rows and surrounded by combustion gases.

Example 8-9 — Design the convection section for the 10 MMBtu/hr regeneration gas heater of Example 8-8. The heat loss is assumed to be 2% of the heat release. Use six 4 in. Sch 80 tubes on 8 in. center-to-center spacing with 8 ft effective length in each row. After two rows of bare shock tubes use finned pipe, 36 fins/ft, 1.25 in. high, 0.105 in. thick. Assume pipe wall temperatures of 200 to 470°F across the finned part of the convection section and average values of 480° and 500°F for the two shock rows.

$$= (6)\,(8)\left[\frac{8}{12} - \frac{4.5}{12}\right] = 14.0 \text{ sq ft}$$

Solution Steps

Fig. 8-26 summarizes the design of both the radiant and convection sections. A trial and error solution for assumed temperatures is required. Details follow for the converged solution.

$$Q_{total} = \text{duty/NTE} = 10\,(10^6)/0.80 = 12.5 \text{ MMBtu/hr}$$

$$r = 970 \text{ lb flue gas/MMBtu (Fig. 8-24)}$$

$$\text{Flue gases flow rate} = 12.5(970) = 12{,}125 \text{ lb/hr}$$

Assume that the setting loss of 2% or 0.25 MMBtu/hr occurs in the radiant section.

The heat content (LHV) rate of the combustion gases leaving radiant section:

$$Q_{radiant\ exit} = 12.5 - 6.525 - 0.25 = 5.725 \text{ MMBtu/hr}$$

The enthalpy (without latent heat) of the exit gas from radiant section:

$$H = 5.725\,(10^6)/12{,}125 = 472.1 \text{ Btu/lb}$$

$$T_g = 1730°\text{F (Fig. 8-20, Flue Gas – LHV)}$$

Convection Section:

$$\text{Area for gas flow} = \text{(no. of tubes) (L) (spacing – D)}$$

FIG. 8-25

Flue Gas Convection-Coefficients for Flow Across Staggered Banks of Bare Tubes[9]

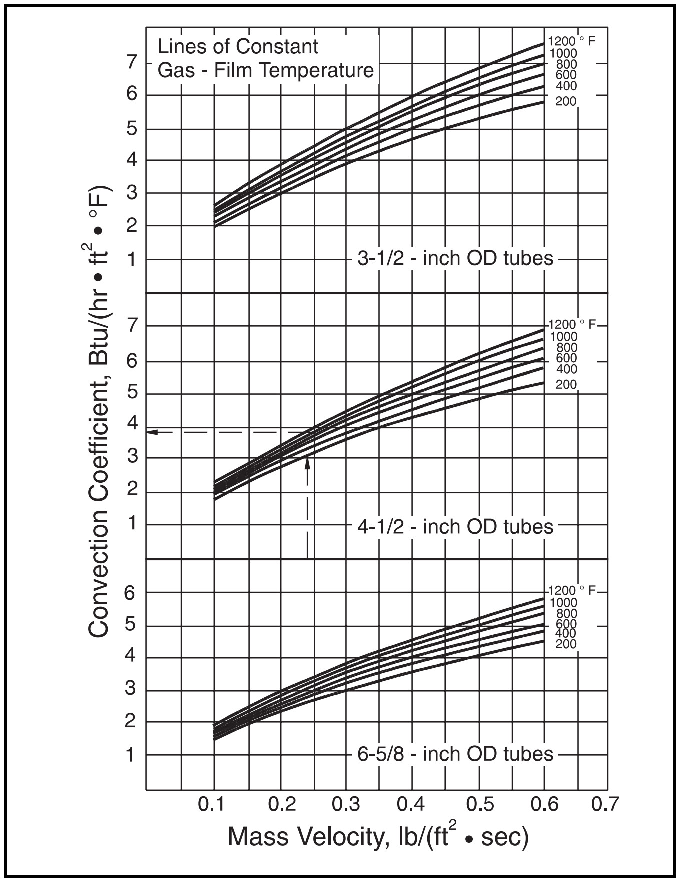

$$G_g = 12{,}125/(14.0)\,(3600) = 0.241 \text{ lb/(sec • sq ft)}$$

First shock row. Assume the average gas temperature is 1625°F and tube wall temperature is 500°F.

$$T_g \text{ mean} = \frac{500 + 1625}{2} = 1062°\text{F}$$

$$h_o = 3.8 \text{ Btu/(hr • sq ft • °F) (Fig. 8-25)}$$

$$A = 1.178 \text{ sq ft per linear ft} \quad \text{(Example 8-8)}$$

$$A_{tubes} = 48\,(1.178) = 56.54 \text{ sq ft}$$

$$Q_c = h_o\, A\, \Delta T = (3.8)\,(56.54)\,(1625 - 500)$$

$$= 0.242 \text{ MMBtu/hr}$$

$$I = Q/A = 10{,}000 \text{ Btu/(hr • sq ft) (Example 8-8)}$$

$$Q_r = (Q/A)\,(A) = 10{,}000\,(56.54) = 0.565 \text{ MMBtu/hr}$$

$$Q_c + Q_r = (0.242 + 0.565)\,10^6 = 0.807 \text{ MMBtu/hr}$$

$$Q_{exit\ gases} = (5.725 - 0.807)\,10^6 = 4.918 \text{ MMBtu/hr}$$

$$H_{exit\ gases} = 4.918\,(10^6)/12{,}125 = 405.6 \text{ Btu/lb}$$

$$T_g\text{(exit)} = 1520°\text{F (Fig. 8-20, Flue Gas – LHV)}$$

Second shock row is analogous except that the radiant heat flux is one third of that for the first row, i.e., 3333 Btu/(hr • sq ft)

$$Q_r = (3333)(56.54) = 0.188 \text{ MMBtu/hr}$$

$$\text{With } h_o = 3.7 \text{ Btu/(hr} \bullet \text{sq ft} \bullet \text{°F)}$$

$$Q_c = (3.7)(56.54)(1465 - 480) = 0.206 \text{ MMBtu/hr}$$

$$Q_c + Q_r = 0.206 + 0.188 = 0.394 \text{ MMBtu/hr}$$

$$Q_{\text{exit gases}} = (4.918 - 0.394)\,10^6 = 4.524 \text{ MMBtu/hr}$$

$$H_{\text{exit gases}} = 4.524\,(10^6)/12{,}125 = 373.1 \text{ Btu/lb}$$

T_g(exit) = 1410°F (Fig. 8-20, Flue Gas – LHV)

Finned rows. The combustion gas mass velocity increases because of the decreased cross sectional area of finned pipe. From Eq 8-13.

$$A_{cs} = \frac{4.5}{12} + \frac{36\,(0.105)\,(7.0 - 4.5)}{144}$$

$$= 0.441 \text{ sq ft/linear ft}$$

$$G_g = \frac{12{,}125}{[48\,(0.667 - 0.441)(3600)]}$$

$$= 0.310 \text{ lb/(sec} \bullet \text{sq ft)}$$

$$Q_f = 10.0 - 6.525 - 0.807 - 0.394 = 2.274 \text{ MMBtu/hr}$$

$$Q_{\text{exit gases}} = 12.50 - 10.00 - 0.25 = 2.25 \text{ MMBtu/hr}$$

$$H_g(\text{exit}) = 2.25\,(10^6)/12{,}125 = 185.6 \text{ Btu/lb}$$

T_g(exit) = 730°F (Fig. 8-20, Flue Gas – LHV)

Assuming that HHV is 10% more than LHV, the gross heater efficiency is 80% / 1.1 = 72.7%. Note that this agrees closely with Fig. 8-19 for 20% excess air and 730°F.

Pipe and gas temperatures are:

$$T_{p1} = 200°\text{F}; \quad T_{p2} = 470°\text{F}; \quad T_{p\text{ av}} = 335°\text{F}$$

$$T_{g1} = 1410°\text{F}; \quad T_{g2} = 730°\text{F}; \quad T_{g\text{ av}} = 1070°\text{F}$$

$$\Delta T_{LM} = [(1410 - 470) - (730 - 200)]/\,ln\,(940/530) = 715°\text{F}$$

$$T_{\text{film}} = (335 + 1070)/2 = 703°\text{F}$$

h_o = 4.0 Btu/(hr• sq ft • °F)(Fig. 8-25)

$Q_f = h_o\,A_o\,\Delta T_{LM}$(Eq 8-10)

$$A_o = 2.274\,(10^6)/(4.0)\,(715) = 795 \text{ sq ft}$$

This is the theoretically required surface area. From Example 8-5, the fin efficiency is 87% and the external surface area of the finned pipe is 12.10 sq ft/linear ft.

$$L_{\text{pipe}} = 795/[(0.87)\,(12.10)] = 75.5 \text{ ft}$$

With 48 linear ft per row this is 1.6 rows. Use 2 rows.

Stack Draft

The stack draft must overcome the gas friction loss in the convection section, burner, and stack. The stack diameter is often sized for 15 to 20 ft/sec stack gas velocity. The stack is normally bare carbon steel but must be lined if the flue gas temperature exceeds 750°F or if the fuel has high sulfur content. All wall temperatures should be above the dew point of the flue gas.

Typical draft profiles for direct fired natural draft heaters are shown in Fig. 8-27. There are two ways to control the flow of combustion air: stack dampers or combustion air registers. There should be a slight vacuum in a natural draft heater to prevent leakage of the flue gases. There is usually an increase in pressure of 0.01 in. H_2O per ft of firebox height and several inches pressure drop across the convection section.

Example 8-10 — Find the available draft in a 2 ft ID by 20 ft long stack attached to the top of the convection section for the 10 MMBtu/hr regeneration gas heater of Examples 8-8 and 8-9. Assume dry air at 60°F and 14.7 psia.

Solution Steps

Assume $\mu_g = \mu_a$ from Fig. 23-26.

$$Re = \frac{0.5263 \bullet M}{D \bullet \mu} = \frac{(0.5263)(12{,}125)}{(2)(0.024)} = 132{,}946$$

For an absolute roughness of 0.002 feet, the relative roughness is 0.001 then,

f = 0.005 (Fig. 17-2)

From Eq 8-18

$$Hav = 0.192 \bullet H_s\,(\rho_g - \rho_a) + 0.0029 \bullet V^2 \bullet \rho_g \left(4 \bullet f_f \bullet \frac{H_s}{D_s} + 1\right)$$

Calculate ρ_g and ρ_a from the ideal gas law.

$$V = \frac{M}{3600 \bullet A \bullet \rho} = \frac{12{,}125}{3600 \bullet \pi \bullet (0.0335)} = 32.0 \text{ ft/sec}$$

$$Hav = 0.192\,(20)\,(0.0335 - 0.0766) + 0.0029\,(32)^2\,0.0335$$
$$[4(0.005)\,(20/2) + 1]$$
$$= -\,0.046 \text{ in. } H_2O$$

The flue gas ideal relative density changes with the combustion air humidity, the fuel composition and with the steam addition to the heater. Burning a typical RD=0.6 dry natural gas, with 20% excess air at 760 mm Hg, without addition of steam, the hotter the combustion air, the higher the influence of the humidity on the flue gas relative density, due to the higher water vapor fraction, as can be seen in Fig. 8-28. For other conditions use the equation shown on the graph.

Insulation

Insulation protects the heater shell from the hot combustion gases and usually reduces the heat losses to less than 2% of the heat release. Three common types of insulation are:

LHV Castable Refractory — This is a mixture of lumnite (cement), haydite (aggregate), and vermiculite (insulation) in 1:2:6 proportions. This low cost, concrete-type insulation has a density of 55 lb/cu ft, a low coefficient of expansion, and negligible shrinkage. It is held to the vertical walls with bullhorns — V-shaped steel wire anchors welded to the outer casing. If a high sulfur (more than 1%) fuel is burned, to prevent the sulfur trioxide in the flue gas from attacking the iron in the lumnite, use a low-iron (1%) cement. LHV castable withstands high (150-200 ft/sec) gas face velocities. Rain or snow entering through the stack will not hurt the concrete. Before start-up, cure and dry out the refractory to avoid “spalling” or flaking caused by unequal thermal expansion.

Ceramic Fiber — A sandwich construction of this material in two densities is sometimes used. Because the ceramic fiber is porous, a protective coating is normally applied first to

FIG. 8-26

10 MMBtu/hr Regenertion Gas Heater

Section	Gas Heat Content Rate MMBtu/hr (LHV)		Heat Transfer MMBtu/hr	Exit Gas Enthalpy Btu/lb	Exit Gas Temperature °F
	In	Out			
Radiant	12.500	5.725*	6.525**	472.1	1730
Shock Row 1	5.725	4.918	0.807	405.6	1520
Shock Row 2	4.918	4.524	0.394	373.1	1410
Finned	4.524	2.250	2.274	185.6	730

* Heat losses are 0.25 MMBtu/hr

** From Example 8-8

FIG. 8-27

Natural Draft Profiles

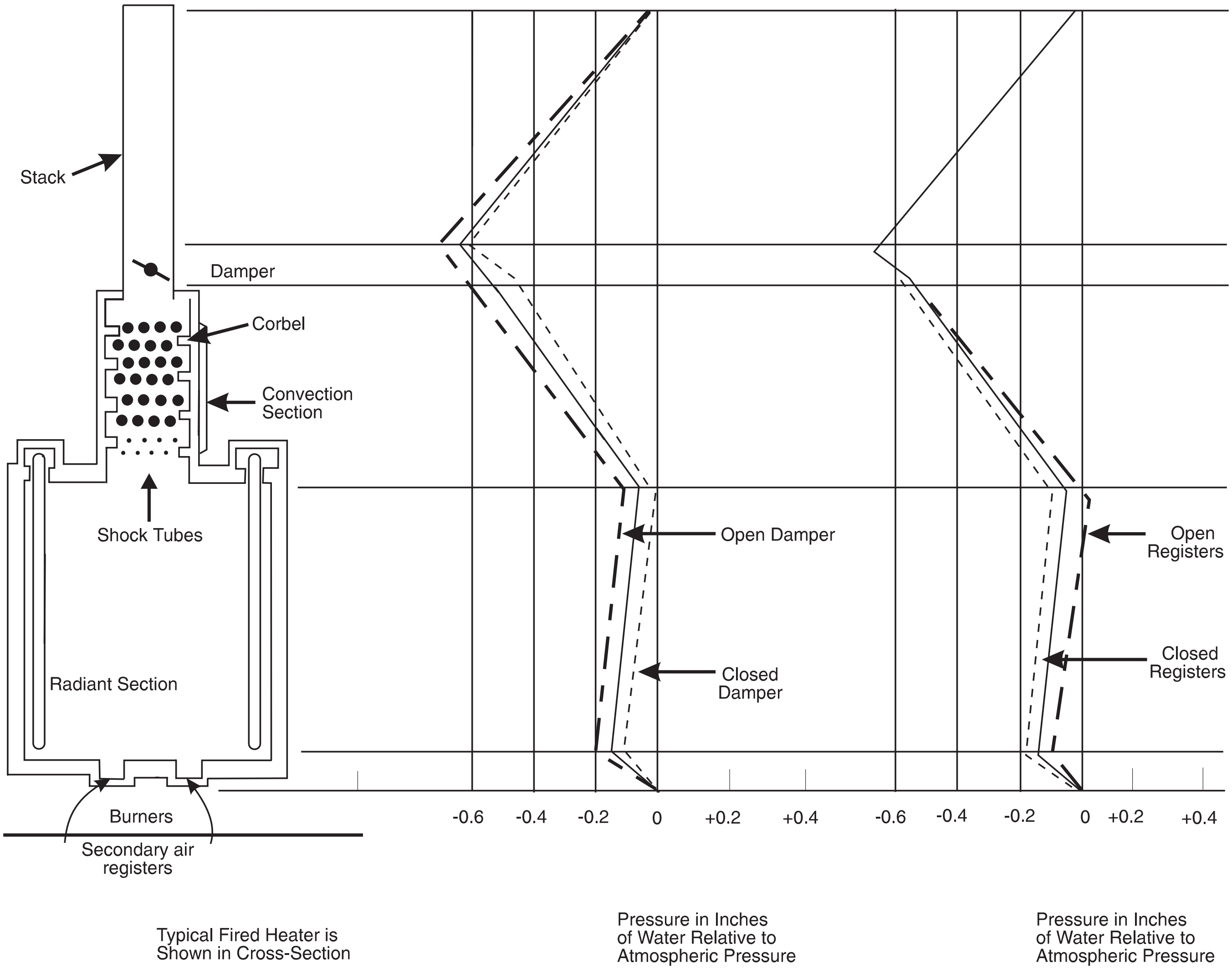

FIG. 8-28

Flue Gas Ideal Relative Density
Fuel 0.6 RD Dry Natural Gas, Burning with 20% Excess Air.
Combustion Air at 760 mm Hg and Indicated Temperature and Relative Humidity

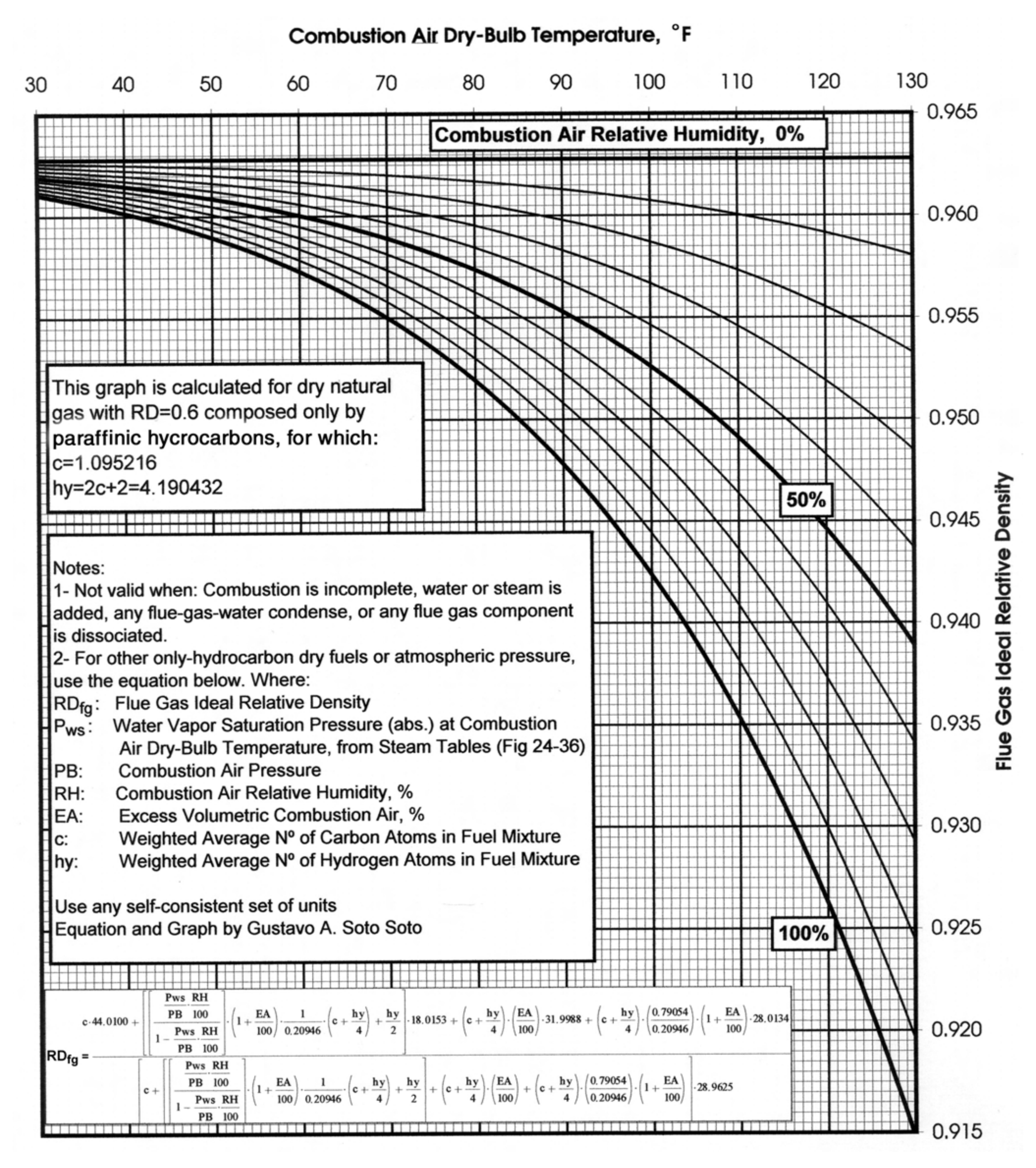

This graph is calculated for dry natural gas with RD=0.6 composed only by **paraffinic hycrocarbons, for which:**
c=1.095216
hy=2c+2=4.190432

Notes:
1- Not valid when: Combustion is incomplete, water or steam is added, any flue-gas-water condense, or any flue gas component is dissociated.
2- For other only-hydrocarbon dry fuels or atmospheric pressure, use the equation below. Where:
RD_{fg}: Flue Gas Ideal Relative Density
P_{ws}: Water Vapor Saturation Pressure (abs.) at Combustion Air Dry-Bulb Temperature, from Steam Tables (Fig 24-36)
PB: Combustion Air Pressure
RH: Combustion Air Relative Humidity, %
EA: Excess Volumetric Combustion Air, %
c: Weighted Average Nº of Carbon Atoms in Fuel Mixture
hy: Weighted Average Nº of Hydrogen Atoms in Fuel Mixture

Use any self-consistent set of units
Equation and Graph by Gustavo A. Soto Soto

$$RD_{fg} = \frac{c\cdot 44.0100 + \left[\left[\frac{\frac{Pws}{PB}\cdot\frac{RH}{100}}{1-\frac{Pws}{PB}\cdot\frac{RH}{100}}\right]\cdot\left(1+\frac{EA}{100}\right)\cdot\frac{1}{0.20946}\cdot\left(c+\frac{hy}{4}\right)+\frac{hy}{2}\right]\cdot 18.0153 + \left(c+\frac{hy}{4}\right)\cdot\left(\frac{EA}{100}\right)\cdot 31.9988 + \left(c+\frac{hy}{4}\right)\cdot\left(\frac{0.79054}{0.20946}\right)\cdot\left(1+\frac{EA}{100}\right)\cdot 28.0134}{\left[c+\left[\left[\frac{\frac{Pws}{PB}\cdot\frac{RH}{100}}{1-\frac{Pws}{PB}\cdot\frac{RH}{100}}\right]\cdot\left(1+\frac{EA}{100}\right)\cdot\frac{1}{0.20946}\cdot\left(c+\frac{hy}{4}\right)+\frac{hy}{2}\right]+\left(c+\frac{hy}{4}\right)\cdot\left(\frac{EA}{100}\right)+\left(c+\frac{hy}{4}\right)\cdot\left(\frac{0.79054}{0.20946}\right)\cdot\left(1+\frac{EA}{100}\right)\right]\cdot 28.9625}$$

the steel casing, for protection against sulfur oxides in the flue gas. A 2 or 3 inch layer of 4 lb/cu ft ceramic fiber is impaled over thin stainless steel studs welded to the casing. Over this is placed a one inch layer of 8 lb/cu ft material. Stainless steel washers twisted onto the studs hold the ceramic fiber in place. This light weight material is much lighter than LHV and is suitable for convection sections. Advantages include ease of application in freezing weather, when water in refractory is a problem; and no need to dry out or cure the ceramic fiber when it is first applied. For cyclic operations, less heat is stored in the fiber which reduces warm-up time. Rain or snow entering the heater during shutdown may drench the fiber, causing it to tear away from the studs on a vertical wall. It cannot withstand gas face velocities above 50 ft/sec. If soot blowing or steam lancing of finned tubes is required, LHV castable refractory must be used or the fiber must be covered with an 1/8 in. stainless steel erosion shield. The erosion shield is also needed for gas turbine exhaust heat recovery units.

Insulating Firebricks (Ifb) — These are used for bridgewalls and floors. Ifb are quite dense, ca. 150 lb/cu ft, are shipped loose, and field installed. They must be dried out slowly. After proper installation, firebricks are sturdy and resist deterioration from weather and high gas velocities.

External Insulation — In sulfur plants and in cold climates, external insulation is frequently used to maintain a minimum stack temperature to prevent condensation within the stack.

Other Design Considerations

Film temperature — Temperatures above 500°F will cause many hydrocarbons to decompose and coke layers to deposit in the tube. This increases the film and metal temperatures and leads to tube failures. Actual decomposition temperature is highly dependent upon the fluid characteristics.

Snuffing — If a tube ruptures, fire could break out in the firebox. Connections are needed to admit CO_2 or a steam or water spray to snuff out the fire. The velocity of this vapor should be kept below 80 ft/sec to avoid erosion of the refractory.

Purging — If the pilot flame or electric spark fails, the firebox may contain an explosive mixture of gases. Before attempting to relight the heater, this mixture must be purged.

Sampling — To control the excess air, samples of flue gas are needed from various points of the heater. The amount of excess air at the burner may differ from that in the stack due to leakage of ambient air through terminal holes, box gaskets, cracks in the casing, etc.

Flue gas temperature — To determine the thermal efficiency of the heater, the stack temperature must be monitored.

Process coil thermowells — The firing rate is controlled to maintain the correct process stream outlet temperature.

Draft gauges — These are needed to set the stack damper or burner air registers.

Soot blowers — In liquid fuel systems these can be used intermittently to reduce fouling of the finned tubes.

Controls

Fig. 8-29 shows an example control system for a fired heater. Fig. 8-30 lists the shutdown/alarms as shown with some comments about the proper installation and use of these particular devices. The control system as depicted by these figures should not be considered complete but only representative of the conditions to be carefully considered in designing a control system for fired equipment.

FIG. 8-29

Example Direct Fired Reboiler

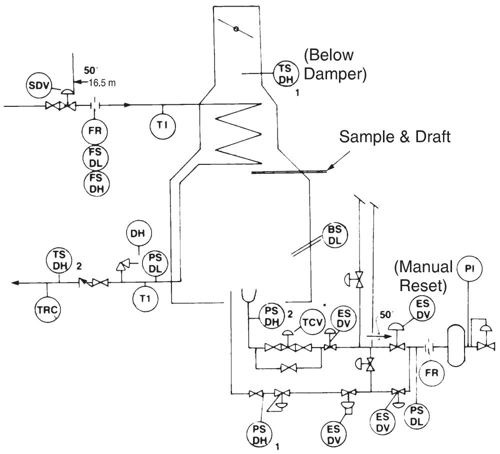

*TCV to also be ESDV if fuel is ethane or heavier

The following are some indications of possible trouble:

- The burner flame is not symmetrical, pulsates or breathes, is unusually long or lazy, lifts off the burner, etc.
- The burner is not aligned and/or the flame is too close to the tubes.
- Lack of negative pressure at the top of the firebox.
- The stack gas is smoky.
- The gas in the firebox appears hazy.
- There are unequal temperatures, more than 10°F difference, on the process pass outlets.
- The stack temperature increases steadily with no change in the process heat duty.
- The fuel gas control valve is wide open.
- The fuel gas composition or pressure varies widely.
- The tubes in the heater are not straight.

Options to Improve the Thermal Efficiency

Option I. Add Convection Surface

Effects:

1. Stack temperature is reduced.
2. Furnace efficiency is increased.
3. Heat release is decreased.
4. Flue gas pressure drop in the convection section is increased.
5. Draft is decreased.
6. Tube side pressure drop is increased.
7. NO_x is reduced.

Things to consider:

1. Increasing stack height.

FIG. 8-30

Heater Alarm/Shutdown Description

Note: Alarms and shutdowns as shown are not to be considered as meeting any minimum safety requirement but are shown as representative of types used for control systems.

Basic Criterion – The failure of any one device will not allow the heater to be damaged.

Schematic Label	Alarm/Shutdown Description	Regeneration Gas Heater	Hot Oil Heater and Direct Fired Reboiler
TSH-1	High Stack Temperature	See Note 1	See Note 1
TSH-2	High Outlet Temperature	See Note 1	
FSL	Low Mass Flow Through Tubes	See Notes 2 & 4	See Notes 3 & 4
BSL	Flame Failure Detection	See Note 5	See Notes 5 & 6
PSL	Low Fuel Pressure		See Note 6
PSH-1	High Fuel Pressure	See Note 7	See Note 7
PSH-2	High Cabin Pressure	See Note 8	Not applicable, if natural draft

Notes:

1. A direct immersion jacketed thermocouple is preferred because the response is ten times faster than a grounded thermocouple in a well. A filled bulb system is a poor third choice. The high stack gas temperature shutdown should be set approximately 200°F above normal operation.
2. An orifice plate signal should be backed up by a low pressure shutdown to ensure adequate process stream flow under falling pressure conditions.
3. The measurement should be on the heater inlet to avoid errors due to two-phase flow.
4. Differential pressure switches mounted directly across an orifice plate are not satisfactory due to switch hysteresis. An analog differential pressure transmitter with a pressure switch on the output is recommended. The analog signal should be brought to the shutdown panel so that the flow level can be readily compared with the shutdown point.
5. The flame scanner should be aimed at the pilot so that a flameout signal will be generated if the pilot is not large enough to ignite the main burner.
6. If the heater design precludes flame scanners, a low fuel gas pressure shutdown should be installed to prevent unintentional flameout. This shutdown should detect gas pressure at the burner.
7. Either burner pressure or fuel control valve diaphragm pressure may be used. This shutdown should be used whenever large load changes are expected. It prevents the heater from overfiring when the temperature controller drives the fuel valve wide open to increase heat output with insufficient air.
8. This shutdown should block in all lines to the heater because, when activated, a tube has probably ruptured. Gas is probably burning vigorously outside the heater.

2. More weight from added convection tubes.
3. Check structure and foundation to see if added weight can be supported.
4. If not, design adjacent structure to house convection tubes and support stack.
5. Consider increased pumping cost for process stream.
6. If fuel is to be changed, some existing convection tubes may have to be removed to accommodate soot blowers.

Option II. Add Economizer for Waste Heat Recovery

Waste heat options:

Steam generation
Steam superheating
Boiler feedwater heater

Effects:

1. Stack temperature is reduced.
2. Furnace efficiency is increased.
3. Flue gas pressure drop in the convection section is increased.
4. Draft is decreased.
5. No change in process stream operation.
6. No change in NO_x.

Things to consider:

1. Study increased load on structure and foundation as in Option I.
2. Will added boiler capacity lower efficiency of existing boilers?
3. Check possibility of a temperature cross.

Option III. Install Air Preheat System

Effects:

1. Stack temperature is reduced.
2. Natural draft is decreased.
3. Furnace efficiency is increased.
4. Firebox temperature is increased.
5. Heat flux rates are increased.
6. NO_x increases unless burners are changed.

Things to consider:

1. Induced draft and forced draft blowers must be installed.
2. Burners must be replaced.
3. Check if tube supports and refractory will withstand higher temperatures.
4. Plot space near furnace must be available.
5. System is self-contained.
6. Considerably more instrumentation must be installed.

Convection Heaters

Heaters in which all the heat transfer is convective (there is no radiant section) are unique modifications of direct fired heaters. Because all aspects of the operation, e.g., fuel combustion, combustion gas temperature, tube wall temperature, etc., are controlled, these heaters are ideally suited for offshore platforms and other applications that demand a high degree of safety.

Fig. 8-31 is a sketch of a convection heater, with recycle regulating the heat flux. The cylindrical steel shell is internally insulated with light castable or ceramic fiber, and the combustion and heat exchange sections are separated by an insulated wall. The fuel gas and all of the combustion air are fed to the short-flame, pre-mix burners. The combustion gases mix rapidly with recycled stack gases to produce the inlet gas to the heat exchange section. This gas at 1200-1500°F flows under the dividing wall and then upward across the finned tubes of the process coil. Part of the cooled gas at 350-500°F leaves as stack gas and the remainder is recycled. The flow in the process coil is downward and counter-current to the hot gases.

Recycling some of the stack gas controls the inlet gas temperature to the heat exchange section, and in turn the maximum film temperature of the process stream. The combined volume of the combustion and recycled gases is much greater than that in most direct fired heaters. This results in higher gas velocities, higher external heat transfer coefficients, and a smaller process coil surface area. The thermal efficiency is high because pre-mix burners operate satisfactorily at 10% excess air and the stack gas temperature can be as low as 100°F above the inlet process stream temperature. The price paid for this is the electricity to run the recirculation fan; this is usually more than offset by the fuel saving.

Convection heater applications include:

- Heating regeneration gas in adsorption processes
- Vaporizing and superheating LNG and LPG
- Preheating or post-heating gas, in pressure reduction
- Heating heat transfer fluids
- Heating sensitive fluids or gases where close bulk-to-film temperatures are critical
- Combined waste-heat recovery with supplementary burners
- Steam Generation

FIRETUBE HEATERS

Firetube heaters range in duty from 60 MBtu/hr glycol reboilers to 12 MMBtu/hr oil or gas pipeline heaters. The design, controls, and operation of firetube heaters vary widely from those used in simple, unattended "wellhead" equipment to those used in complex, well-instrumented, gas plants.

Water Bath Heaters

Fig. 8-32 is a sketch of an indirect fired water bath heater. This design is typical of all indirect fired vessels. The firetube is in the bath in the lower half of the vessel and the process coil is in the upper half of the vessel. The heat transfer medium, in this case water, fills the vessel. A fill hatch, drain, wells for thermostats, and a coil to preheat the fuel are standard. Sizes range from 2 ft OD by 5 ft long to 12 ft OD by 30 ft long. Only one firetube is needed below 5 MMBtu/hr.

Some small heaters are uninsulated. More frequently 1 to 2 in. of weatherproof ceramic fiber or light castable insulation is placed around the cylindrical shell. The ends are left bare so as not to impede access to the coil, burner, or stack. As shown in Example 8-7, insulation can reduce heat losses up to 75%.

A long lazy yellow flame increases the fire tube life and increases the radiant flame area.

FIG. 8-31

Convection Heater

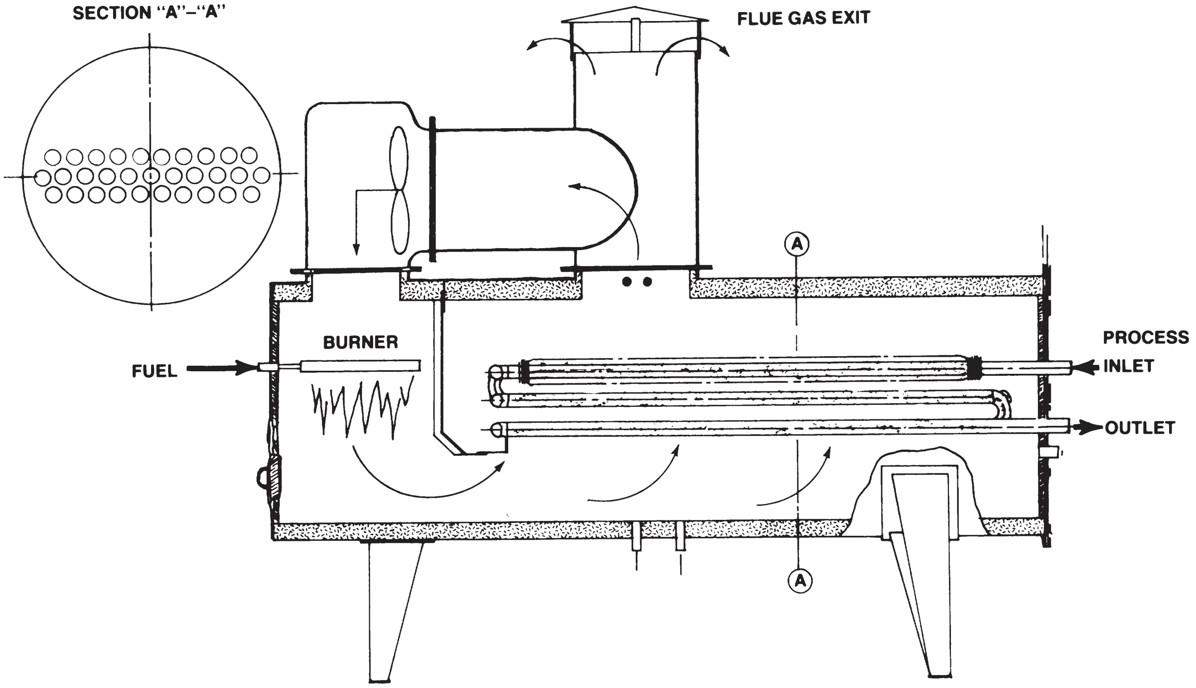

FIG. 8-32

Indirect Fired Water Bath Heater

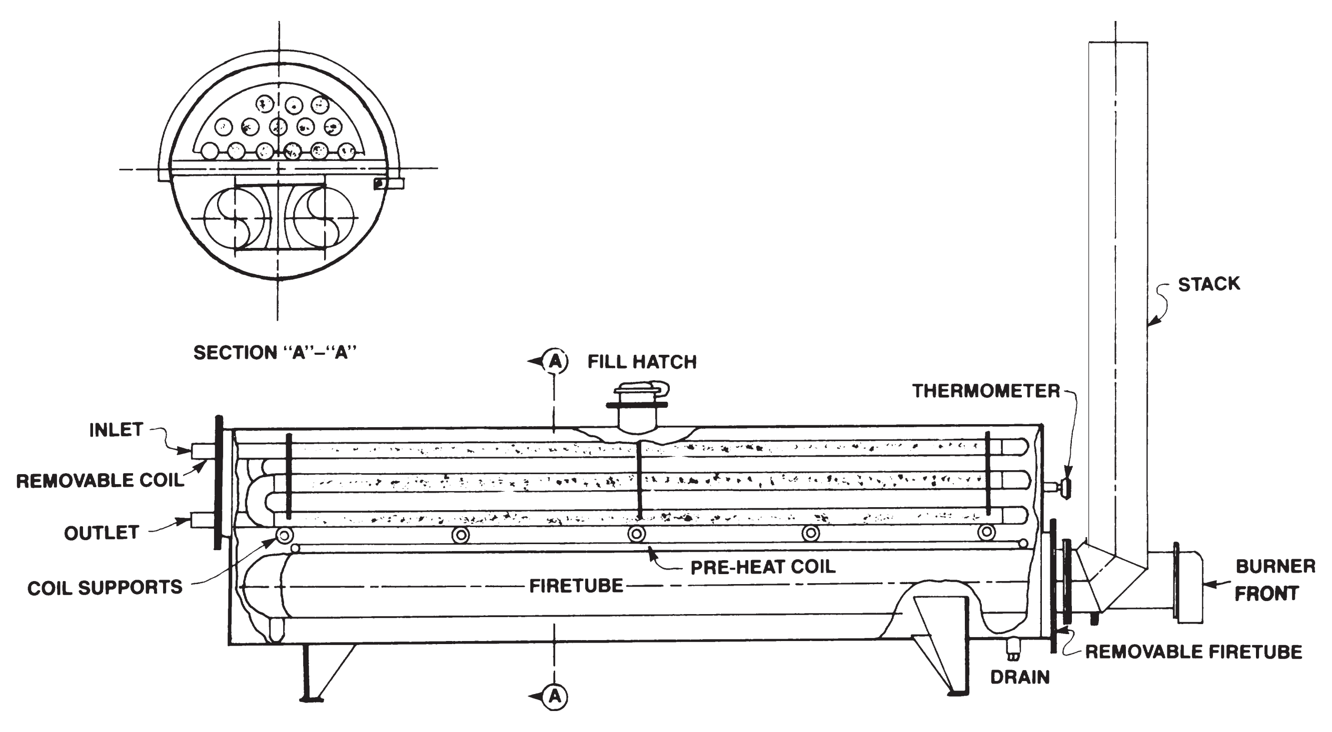

Almost every coil bundle requires a unique design to meet the requirements of heat duty, working pressure, corrosion allowance, sour gas service, NACE MR-01-75, and governing codes, usually ASME Section VII or ANSI B31.3. Use of a P-H diagram will simplify calculations when both sensible and latent heat changes occur in the process stream.

Example 8-11 — What heat duty is required to vaporize 50 gpm of liquid propane at 60°F and 235 psig and superheat the vapor by 20°F?

Solution Steps

Refer to Section 24 "Thermodynamics" and the P-H diagram for propane. At 60°F and 249.7 psia the enthalpy of propane is 287 Btu/lb. The exit enthalpy at 142°F (20°F above the dew point) and 249.7 psia is 462 Btu/lb. The liquid density is 31.7 lb/ cu ft and this corresponds to 4.24 lb/gal.

$$q_l = 50\ \text{gpm}$$

$$M = (50)\,(4.24)\,(60) = 12720\ \text{lb/hr}$$

$$\text{UHT} = M\,(H_2 - H_1)$$

$$= (12720)\,(462 - 287) = 2.23\ \text{MMBtu/hr}$$

Usually long radius return bends connect the passes in the serpentine coil; however, short radius return bends sometimes "fit" the coil bundle into the shell. The heat duty and pressure drop determine the pipe diameter and the number of parallel flow paths and passes in the process coil. Often the internal process stream heat transfer coefficient is much larger than the external water bath coefficient, e.g., Example 8-4. Two parallel flow paths of four passes may be an alternative heat transfer design to one flow path of eight passes. The effect on the process stream pressure drop is significant. Because the pressure drop for turbulent flow is proportional to the 1.83 power of the velocity and the pipe length per pass has been halved, the two flow path pressure drop approaches one seventh of that for one pass.

In many wellhead applications the coil contains a choke that throttles the gas from well pressure to processing or pipeline pressure. This divides the coil into preheat and postheat passes. The rapid expansion is isenthalpic and, if the gas temperature falls too low, hydrates form.

Example 8-12 — Find the optimum distribution between preheat and postheat duty for expanding methane from 3000 psia and 80°F to 1000 psia and 100°F.

Solution Steps

Refer to Fig. 8-33 which is a P-H diagram for CH_4 on which the line AGB for hydrate formation is superimposed. (This is a combination of Figures 20-19 and 24-23.) Consider the following three alternative paths.

Path CDE expands the gas immediately and then heats it. This results in the smallest coil area because the largest log mean temperature difference between the water bath and the methane is available. But the expansion crosses the hydrate line and the gas will freeze.

Path CHE supplies all the heat needed and then expands the gas. This is feasible, but not desirable because the lowest temperature difference requires the largest coil area.

Path CFGE first heats the methane so that the expansion just touches the hydrate line, expands it, and heats to the exit temperature. This is the minimum coil area that corresponds to an operable path. So:

Preheat duty: (476 – 448) = 28 Btu/lb CH_4

Postheat duty: (510 – 476) = 34 Btu/lb

In practice, some penetration of the hydrate line is possible; and the balance between "preheat" and "postheat" passes is such that the lowest temperature is 10 to 15°F below the hydrate line.

Freezing of the water bath is a potential problem. If the heater is insulated, a continuous pilot suffices. Several different antifreeze additives have been tried and all have shortcomings:

- Methyl alcohol is volatile and has to be replenished. It is also a fire hazard.
- Calcium chloride and rock salt in concentrations that are effective are very corrosive.
- Glycols are generally accepted as the safest and most trouble-free additive. The decomposition products are acidic; it is recommended that corrosion and rust inhibitors be used concurrently.

Glycols reduce the heat transfer coefficient of the bath significantly. For example, a 50% by weight solution of ethylene glycol reduces the firetube flux by 20% and the external bath heat transfer coefficient for the process coil by 40%. (See Fig. 8-34)

Fig. 8-34 compares the bath properties of fire tube heaters. The advantage of using water as the heat transfer medium is apparent. The relatively low bath temperature results in the lowest stack temperature and the highest firetube efficiency. Note that the firetube efficiency does not account for heat losses. For large well insulated heaters the overall process NTE may exceed 80%. But for small uninsulated heaters with intermittent operation the process NTE may be as low as 60%.

Water bath heater applications include:

- Heating high pressure gas and/or oil in oilfield production
- Heating natural gas at city gate stations from main gas pipelines
- Heating light hydrocarbon liquids to superheated state for alternate or standby fuel sources

Low Pressure Steam Heaters

When a process stream temperature of 160 to 220°F is needed, a 15 psig steam heater can be used to reduce the required size of the tube bundle. Construction, shown in Fig. 8-35, is under ASME Section IV code. Steam outlet and condensate return connections are standard so that the steam may be used in external exchangers if desired. The condensing steam has an external process coil heat transfer coefficient of 800-1200 Btu/(hr • sq ft • °F). It is important to vent all air at start-up. With insulation and controls, the NTE can be as much as 80%, which is close to the efficiency for a firetube.

Low pressure steam heater applications include:

- Low pressure steam generators (without process coil)

FIG. 8-33

Methane Pressure-Enthalpy Diagram

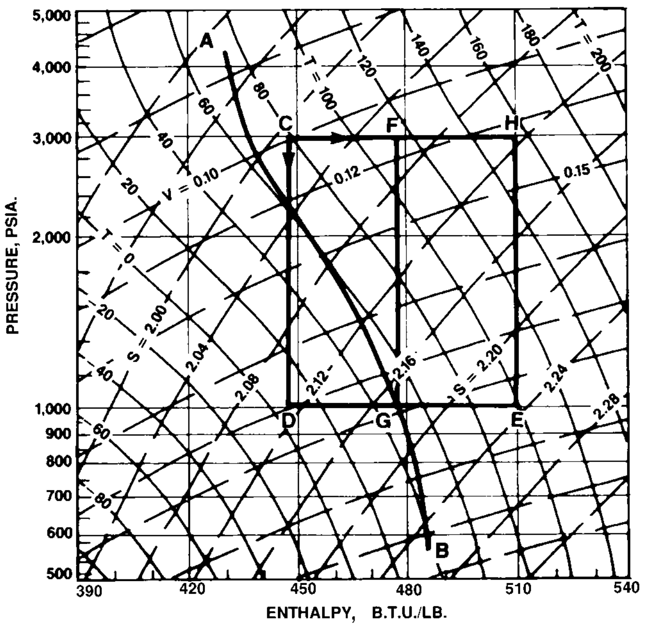

FIG. 8-34

Bath Properties of Fire Tube Heaters

Heater	Bath Temp. °F	Outside Coil Bundle h_o Btu/(hr • sq ft • °F)	Firetube Flux Q/A Btu/(hr • sq ft)	Stack Temp. °F	Firetube Efficiency NTE %
Water Bath	180-195	160	10,000 - 13,000	750 - 900	76-82
50 % Ethylene Glycol	195-205	115	8,000 - 10,000	800 - 900	76-80
Low Pressure Steam	245-250	1000	15,000 - 18,000	800 - 900	76-80
Hot Oil	300-550	40	6,000 - 8,000	900 - 1100	71-76
Molten Salt	400-800	200	15,000 - 18,000	1000 - 1200	68-74
TEG Reboiler	350-400	–	6,000 - 8,000	800	75-80
Amine Reboiler	245-270	–	6,500 - 10,000	900	75-80

FIG. 8-35

15 psig Steam Bath Heater

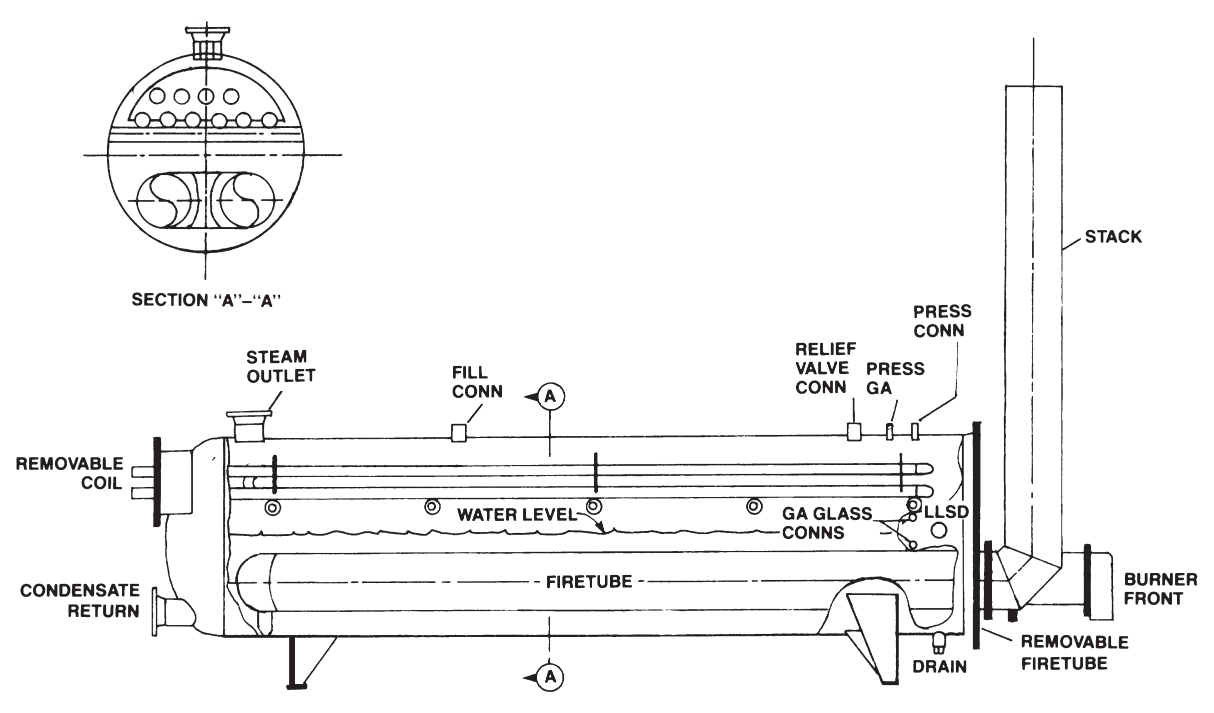

- Maintaining flow temperatures for heavy hydrocarbons in storage

Hot Oil Heaters

These heaters furnish a heating bath to 600°F or higher, which is hot enough for dry desiccant or hydrocarbon recovery regeneration gas. Another less severe application is heavier hydrocarbon vaporization prior to injection into a gas pipeline to raise the heating value.

Manufactured heat transfer oils are "blended" for about a 200°F operating range. For example, Fig. 8-36 gives typical heat transfer properties for a 300° to 550°F polyphenyl ether.

The advantages of hot oils are:

- Low vapor pressure at ambient temperature
- Always liquid and easy to handle
- Blended for a specific temperature range
- Higher specific heat than normally occurring hydrocarbons

The disadvantages include:

- Escaping vapors are environmentally undesirable
- Low heat transfer properties, see Fig. 8-34. (The firetube flux is half that of a water bath heater and the external process coil heat transfer coefficient is about one quarter.)
- Usually an ANSI Class 300 flange design is required
- When overheated, the oils will oxidize and coke on the firetube. Also, they can be ignited
- Ethers are expensive
- The ethers are hygroscopic and must be kept dry

Molten Salt Heaters

Molten salt baths operate at 400° to 800°F. They are mixtures of sodium nitrate and the nitrites of sodium and potassium. The advantages include:

- Good heat transfer properties, see Fig. 8-34. The firetube flux is as high as that for a low pressure steam heater. Note the process coil heat transfer coefficient of 200 Btu/(hr • sq ft • °F) is partially due to the small diameter tubes that usually comprise the coil bundle.
- Thermally stable to 1000°F.
- The salt will not ignite.

The disadvantages are:

- More difficult to handle, large lumps must be broken up.
- The salt is hygroscopic. If wet, it decrepitates on melting and is hazardous.

Because of the higher operating temperature there are no flange joints on the shell except for the salt loading hatch, see Fig. 8-37. On large heaters the expansion of the firetube may be sufficient to warrant an expansion joint for the stack. The shell is insulated to protect personnel.

One of the requirements for heating regeneration gas is a very low pressure drop across the coil bundle. To realize this and still obtain good heat transfer, the coil bundle consists of many, small diameter, U-tubes in parallel. These are welded into a tube sheet that is attached to a channel header. To reduce thermal stresses caused by the cold inlet gas, the inlet half of the tube sheet is insulated.

Molten salt heater applications include:

- Regeneration gas service

- Vaporization of hydrocarbon liquids in stabilization service

Direct Fired Reboilers

Gas treating and dehydration frequently employ direct fired reboilers. More detailed process descriptions are given in Sections 20 and 21. Fig. 8-38 is a sketch of a typical direct fired reboiler. The rich fluid containing the sour gas or water is boiled in the reboiler to remove the sour gas or the water. The lean fluid then is used to treat or dehydrate the process gas stream again. Surge tanks for the lean fluid may be integral with the reboiler as shown, or may be mounted as a separate vessel beneath the reboiler.

Firetubes, Burners, Stacks

Firetubes typically range from 6 to 30 in. ID and from 5 to 30 ft long. Normally the burner flame extends halfway down the first leg. A mitered joint return bend is used to reduce the resistance to flow of the combustion gases.

Example 8-13 — What is the firetube flux when the combustion gases are at 2800°F and the firetube wall is at 300°F. Assume that the fuel is natural gas and the heat release is 4 MMBtu/hr with 20% excess air in a 2 ft ID pipe.

Solution Steps

Refer to example 8-6. The radiant heat flux is 16,990 Btu/(hr • sq ft). The convective heat flux must be added.

$r = 970$ lb flue gas/MMBtu heat release (Fig. 8-24)

Combustion gas flow is $4\,(970) = 3880$ lb/hr

From Eq 8-7, 8-8b and 8-9a and Fig. 8-5

$$Nu = 0.023 \cdot Re^{0.8} \cdot Pr^{0.33} \cdot (\mu_b/\mu_w)^{0.14}$$

$k = 0.038$ Btu/[hr • sq ft • °F/ft] at average T = 1550°F

$Cp = 0.248$ Btu/(lb • °F)

$\mu_b = 0.045$ cp

$\mu_w = 0.023$ cp

$$\frac{h \cdot 2.0}{0.038} = 0.023 \left[\frac{0.5263\,(3880)}{2\,(0.045)}\right]^{0.8} \left[\frac{2.419 \cdot 0.248 \cdot 0.045}{0.038}\right]^{0.33} \left[\frac{0.045}{0.023}\right]^{0.14}$$

$$h = \frac{0.038\,(0.023)}{2.0} \cdot (3052.5)(0.8933)(1.0985)$$

$h = 1.31$ Btu/(hr • sq ft • °F)

$Q/A_c = 1.31(2800 - 300) = 3{,}275$ Btu/ (hr • sq ft)

Total heat flux = 16,990 + 3,275 = 20,265 Btu/(hr•sq ft)

This is a maximum firetube flux and is typical only for water bath or low pressure steam heaters.

Even though firetube failure is rare, it is advisable to prevent movement or flexing with restraining bars. This prevents weakening of the weld joints at the end plate. In addition, when the fuel is oil, include a drain with plug in the bottom of the firetube leg between the end plate and the burner flange. Then the firetube can be drained if any oil accidentally gets past the burner.

Inspirating partial pre-mix burners are used in the vast majority of firetube heaters. The gas is preheated before expansion, flow control, and flow through the burner. While the burner draws the primary air into the firetube, it is the stack draft, usually less than 1 in. H_2O, that overcomes the pressure drop of the combustion gas flow and admits the secondary air. The stack height is 10 to 20 ft.

An alternative to the burner front shown in the equipment sketches is a flame arrestor, the element of which provides many small tortuous paths between rolled sheets of thin corrugated aluminum. Sucking the combustion air through the element is an additional pressure drop for the stack draft to overcome. The term arrestor is somewhat of a misnomer because any fire in the firetube or around the burner is contained rather than extinguished. The passage through the arrestor cools the gas so that external combustion does not occur.

Controls

Fig. 8-39 shows an example control system for an indirect fired heater. Fig. 8-40 lists the shutdown/alarms as shown with some comments about the proper installation and use of these particular devices. The control system as depicted by these figures should not be considered complete but only representative of the conditions to be carefully considered in designing a control system for fired equipment. The controls probably vary more than the design of the heater. For example, a wellhead line heater or glycol dehydrator may have no more than an on-off thermostat for the main burner and a small continuous pilot. A line heater, hydrocarbon vaporizer, or amine reboiler may have all of the controls listed in Fig. 8-40.

Troubleshooting

The following problems can occur with firetube heaters.

- **Bath level loss** can be the result of too high a bath temperature. This is often caused by the temperature controller on the process stream. Fouling of the process coil, internal and/or external, means a hotter bath is needed to accomplish the same heat transfer. The coil should be removed and cleaned.

If fouling of the coils is not the problem, water losses can be reduced with a vapor recovery exchanger mounted on top of the heater shell. It consists of thin tubes that condense the water vapor. Vapor losses can also be reduced by altering the composition of the heat medium or, in drastic cases, by changing the heat medium.

- **Shell side corrosion** is caused by decomposition of the bath. (The decomposition products of amines and glycols are corrosive.) Some decomposition and corrosion is inevitable; however, excessive decomposition is usually due to overheating near the firetube. Corrosion inhibitors are commonly added. There are numerous reasons for overheating the bath: localized ineffective heat transfer caused by fouling, excessive flame impingement, etc. An improper flame can sometimes be modified without system shutdown. Fouling, however, requires removal of the firetube.
- **Inadequate heat transfer** may result from improper flame, under-firing, firetube fouling, coil fouling, poor shell fluid dynamics, too small a firetube or coil, etc. If it is not improper design, then it is most likely fouling or an improper flame. The solution may be a simple burner adjustment to correct the air to fuel mixture.
- **High stack temperature** can be the result of an improper air to fuel mixture. A leak of combustible material from the process side to the firetube is also a cause. It can also be the result of excessive soot deposition in the firetube.
- **Firetube failure** is most commonly caused by localized overheating and subsequent metallurgical failure. These

FIG. 8-36

Typical Physical Properties of Hot Oil

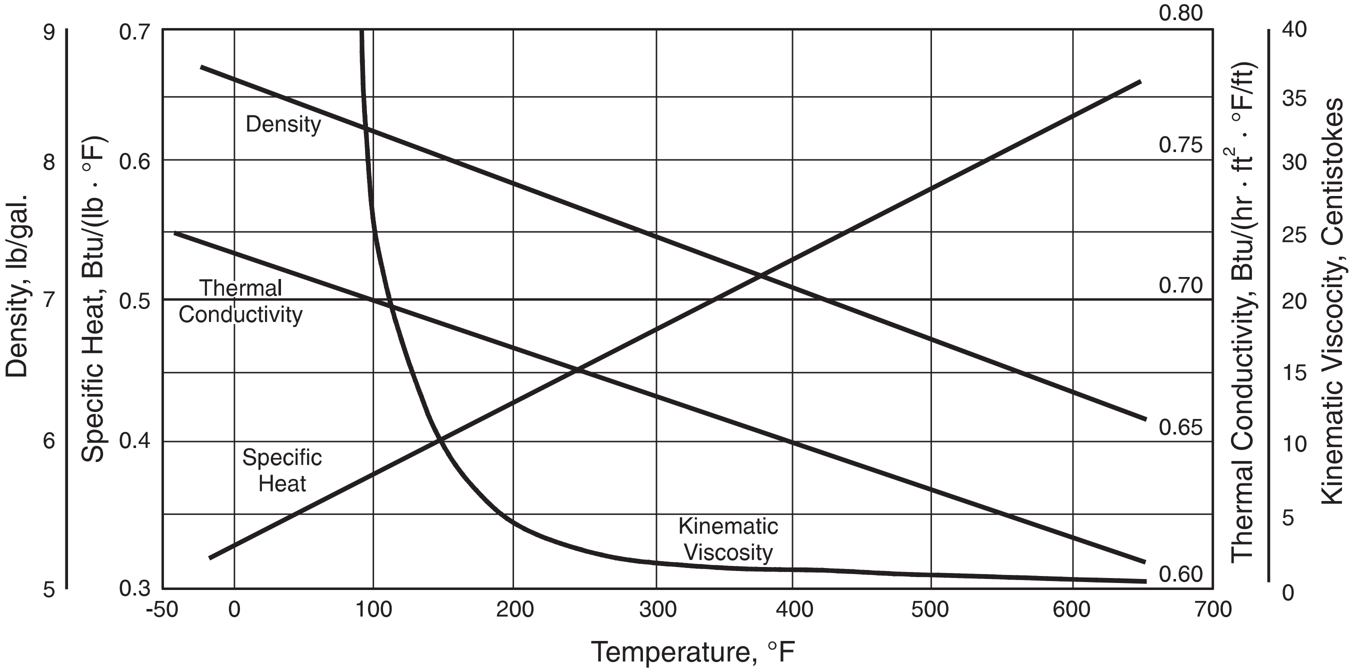

FIG. 8-37

Salt Bath Heater

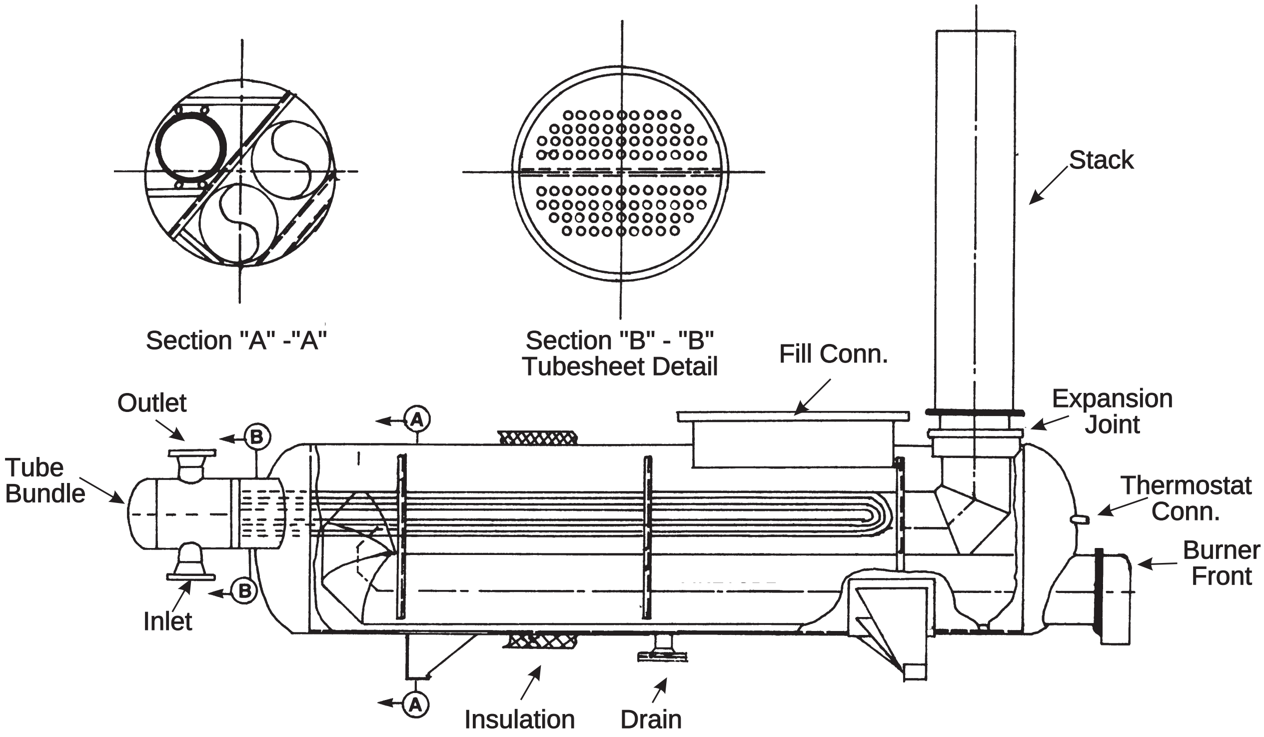

FIG. 8-38

Amine Reboiler

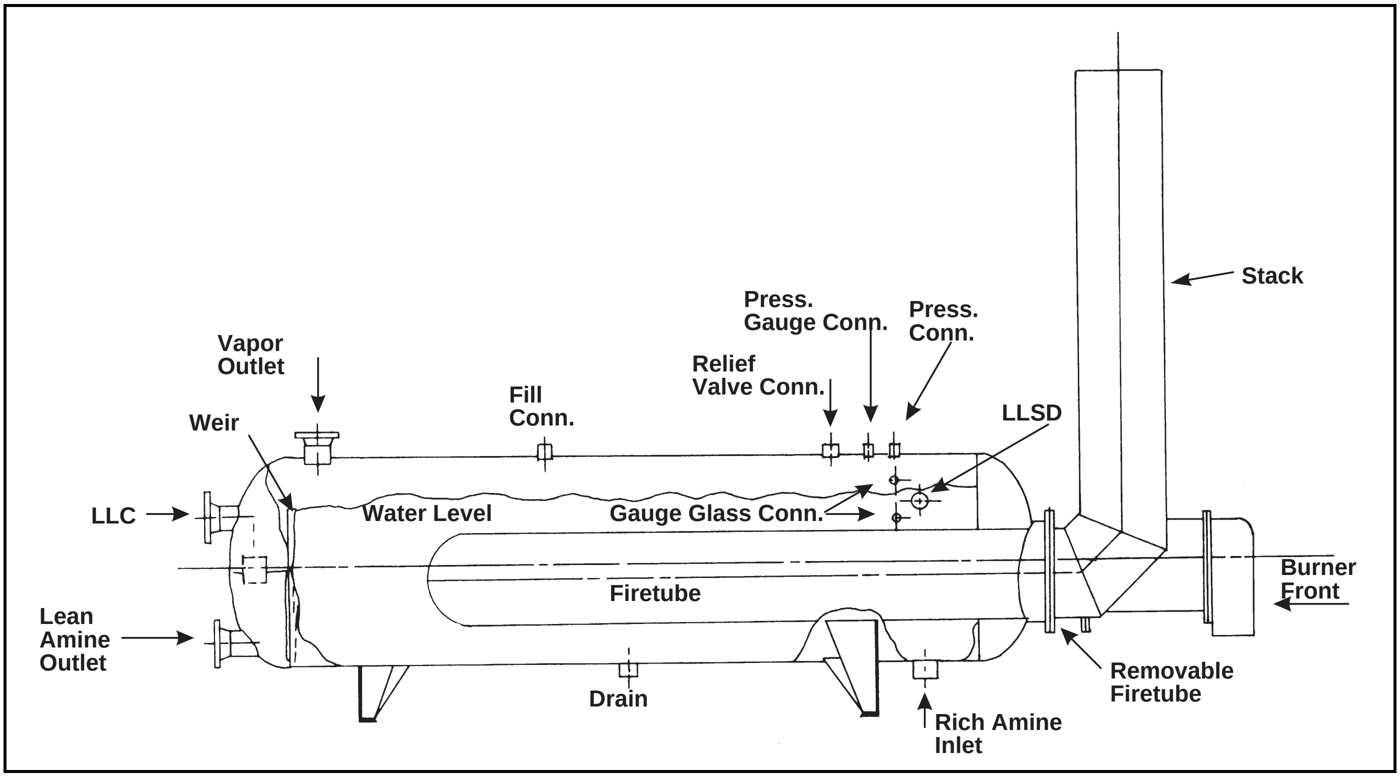

"hot spots" are caused by hydrocarbon coking and deposition on the bath side. Firetube corrosion is caused by burning acid gases for fuel. The most damaging corrosion occurs in the burner assembly. There is little that can be done except to change the fuel and this may be impractical. Proper metallurgy is essential when burning acid gases.

- **High or low fuel gas pressure** can have a dramatic effect on the operation of a firetube heater. Burners are typically rated as heat output at a specified fuel pressure. A significantly lower pressure means inadequate heat release. Significantly higher pressure causes over-firing and overheating. The most common causes of a fuel gas pressure problem are the failure of a pressure regulator or an unacceptably low supply pressure.

Improved Thermal Efficiency

Economic incentives have promoted the development of devices to improve the thermal efficiency, i.e., reduce the excess air and the stack temperature.

Control of the flow of air into the firetube or the gas flow in the stack with dampers is sensitive because the relatively weak stack draft is easily influenced by an additional pressure drop. Several designs are available: axially rotating vanes around the burner, a pivoting horseshoe around the burner, a hinged plate over the air inlet duct, a rotating plate in the stack, etc.

Methods to increase firetube heat transfer are shown in Fig. 8-41. An economizer (end view) consisting of longitudinally finned tubes inserted into the return leg of the firetube adds heat transfer surface; a turbulator increases the heat transfer coefficient; and internal fins both add area and increase turbulence. Often additional equipment, e.g., a pump to circulate the bath through the economizer or an actuator to position the damper, is needed.

With good control of the excess air, i.e., 5% to 10% and a stack temperature of 400°F, the NTE approaches 90%. However, the pressure drop across the firetube increases and the stack draft decreases. This means that a forced draft burner may be required. The economics are usually favorable and short payout periods for these modifications are common.

Hot Oil System

A simplified schematic of the major components of a hot oil system is given in Fig. 8-42. The heat transfer medium is pumped through a fired heater to the heat exchangers and returns to the pump suction surge vessel. In some cases a fired heater is replaced by a waste heat source, such as the exhaust stack of a fired turbine. The slip-stream (typically less than 5%) filter is optional but it will help to retain the performance characteristics of the heat medium.

Proper design of the heater is critical for satisfactory operation. The heat transfer fluid must have sufficient velocity, generally 4 to 10 ft/sec, to avoid excessive film temperatures on the heater tubes. Hot spots can lead to tube failure and fluid degradation. Design and capacity of a heater should be limited so that the maximum film temperature does not exceed the maximum recommended operating temperature of the fluid.

The surge vessel is provided with blanket gas and vent connections. Expansion room for the hot oil from ambient to operating conditions must be provided. On small systems the surge tank may be sized to hold all of the heat medium. Two piping arrangements are used for the surge vessel; flow

FIG. 8-39

Indirect Fired Heater

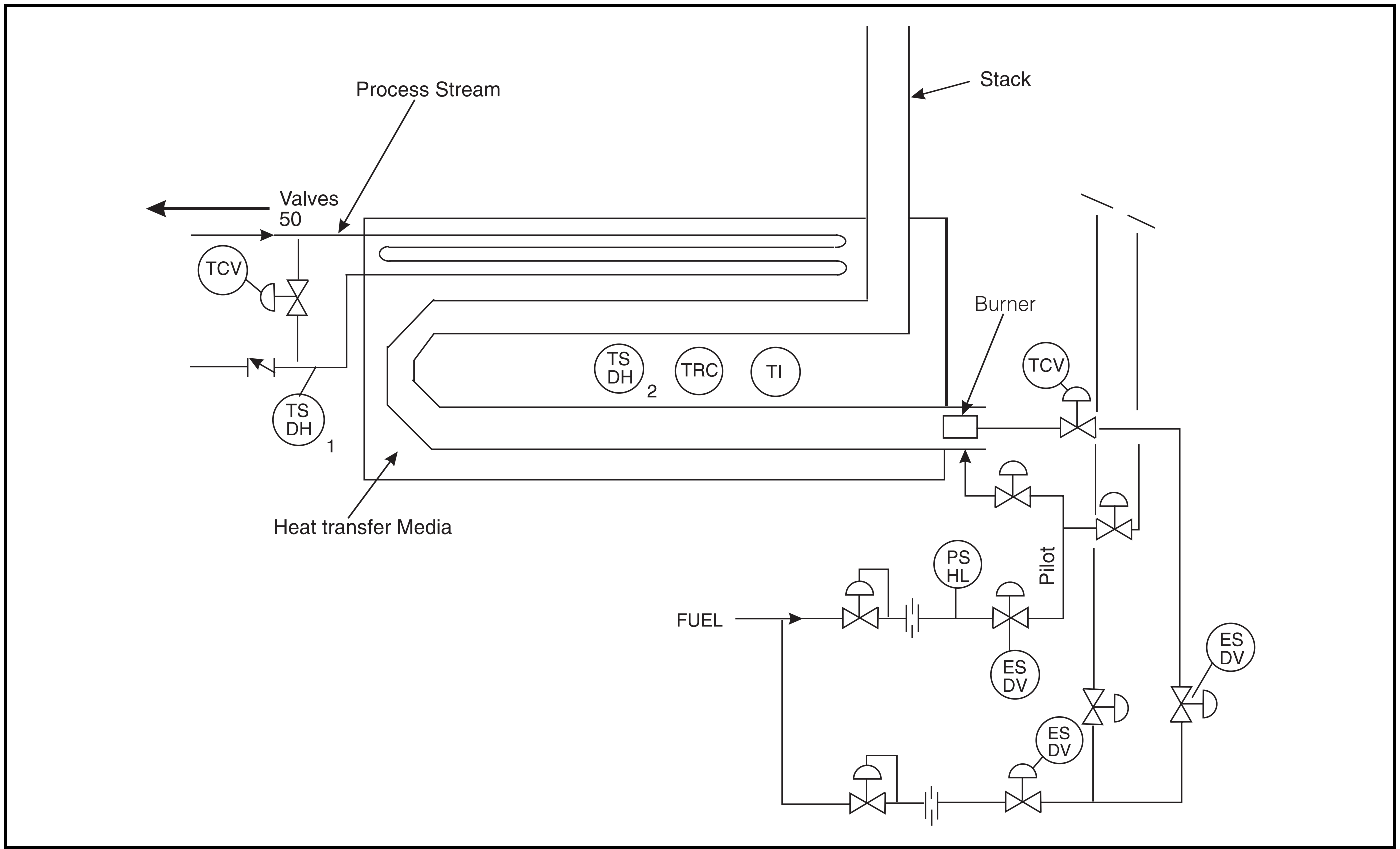

FIG. 8-40

Bath Heater Alarm/Shutdown Description

Note: Alarms and shutdowns as shown are not to be considered as meeting any minimum safety requirement but are shown as representative of types used for control systems.

Schematic Label	Alarm/Shutdown Description	Line Heater	Hydrocarbon Reboiler	Low Pressure Steam Heater	Hot Oil or Salt Heater	Glycol Reboiler	Amine Reboiler
TSDH-2	High Bath Temperature	No Note 1, 2	Yes	No	Yes	Yes	Yes
LSL	Low Bath Level	No Note 2	No	Yes	Yes Note 3	No Note 2, 3	Yes Note 2, 3
PSL	Low Fuel Pressure	Yes Note 4	Yes	Yes	Yes Note 4	Yes	Yes
PSH	High Fuel Pressure	Yes Note 4	Yes	Yes	Yes Note 4	Yes	Yes
BSL	Flame Failure Detection	No Note 2, 5	Yes Note 5	No Note 2	Yes Note 5	No Note 2	No Note 2
PSH	High Vessel Pressure	No	No	Yes Note 6	No	No	Yes Note 6

Notes:

1. When the process stream is oil, a high bath temperature shut down precludes the danger of coking.
2. This instrumentation is for heaters located in gas processing sections. Wellhead units have a minimum of controls.
3. Low bath level protects both the firetube and bath when it will coke (hot oils, glycol, amine) or decompose (molten salt).
4. Low/high fuel pressure is always used when the fuel gas is taken from the exit process stream.
5. Optical UV scanners or flame rods should be used because of the speed of response.
6. Code requirements, ASME Section IV or VIII.

FIG. 8-41

Methods to Increase Firetube Heat Transfer

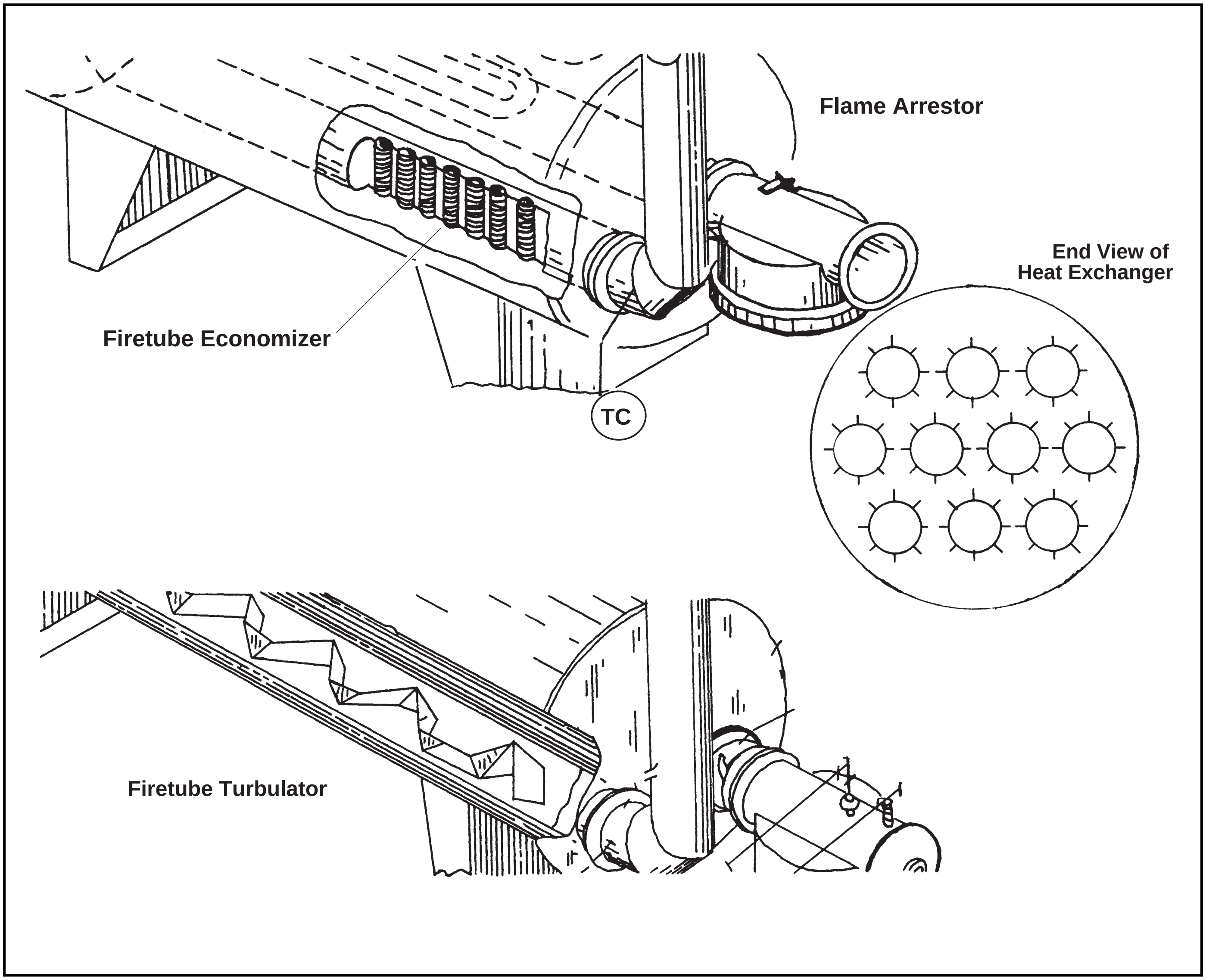

through the vessel or the vessel as a surge riding on the pump suction line.

Pump head requirements are usually 40 to 80 psi. Frequently the pump is spared and provided with isolating valves for servicing. A slip-stream should pass through the off-line pump to maintain the off-line pump at operating temperature. Selection of pumps should consider the high operating temperature and its effect on seals, packing rings, and gaskets. Slight leakage may occur at startup; the pump gland should not be tightened until the system reaches operating temperature. Suction strainers should be used during startup.

Piping design and installation must include consideration to minimize vapor traps and to relieve expansion and contraction stresses. The number of flanges in a hot oil system should be minimized; ANSI Class 300 lb flanges will aid in minimizing leakage.

During initial startup, the system may contain water, which must be slowly vaporized and removed. The surge vessel is sometimes the high point in the system to aid in this operation. On shutdown, fluid should be kept circulating to dissipate residual refractory heat. Planned maintenance should include analysis of the heat transfer medium, inspection of insulation, and inspection of heater and mechanical equipment.

Consult suppliers of hot oils to obtain design information such as Fig. 8-36 or suggestions such as reference 12.

VAPORIZERS

Vaporization Processes

Vaporization is a process in which a substance that is in liquid state is brought to vapor state. A variety of vaporization processes may be used in the gas industry. The process depends on the liquid composition, pressure and temperature; the required vapor pressure and temperature; the energy source type and temperature; and other aspects, such as, whether the liquid is flowing in a steady state process or whether the liquid is in a tank.

Some common vaporization processes in the gas industry are:

- **High pressure refrigerated and non-refrigerated liquids**

  Steady state flowing liquid.

  The liquid pressure is reduced through a pressure control valve or regulator, and the expansion vaporizes the liquid. If the resulting vapor temperature is too low, the fluid is heated. If the required vapor temperature is well below ambient temperature, the heat may come from the atmosphere or from a water source, using a heat exchanger placed downstream of the pressure reducer. If not, the heat may be supplied using a process stream heat exchanger or a heater usually placed upstream of the pressure reducer. If there is no requirement to reduce the liquid pressure, heat shall be supplied using criteria similar to above.

- **High pressure non-refrigerated LPG, propane and butanes**

  Liquid withdrawal from a tank containing the liquid.

  The liquid being extracted from the tank is vaporized in a similar process described above. The reduction of the liquid volume in the tank may be compensated with vapor supplied to the tank. Otherwise, there is vaporization inside the tank, causing some temperature and pressure drop to the liquid and vapor in it. If the heat transfer from the ambient to the tank and its content is such that the temperatures and pressures are not acceptable, additional heat can be supplied to the tank content.

  Vapor withdrawal from a tank containing the liquid.

  The vaporization occurs inside the tank, causing some temperature and pressure drop to the liquid and vapor in it. If the heat transfer from the ambient to the tank and its content is such that the temperatures and pressures are not acceptable, additional heat can be supplied to the tank content, or to the flowing vapor, or both.

- **Refrigerated liquids around atmospheric pressure**

  Unless there is sufficient liquid column to provide the pressure, the liquid shall be pumped to an adequate pressure before the vaporization process. If the required vapor temperature is well below ambient temperature, the heat may come from the ambient, using a heat exchanger placed downstream of the pump. If not, the heat may be supplied using a process stream heat exchanger or a heater.

Vaporization Equipment

The heat for vaporization may come from an ambient source, such as the air or water, or geothermal or sun energy, for the lower temperature applications. Alternatively, it may come from a process stream, steam, hot water, flue gases from a waste heat recovery unit or from a fired heater, and electricity, for higher temperature applications.

- **Stream vaporization**

To vaporize a stream, a heat exchanger or a heater may be used. Fired equipment commonly used are convection and water bath type.

- **Vaporization in the tank**

To vaporize the tank content internal or external equipment may be used to supply the heat. Internal equipment may be a heat exchanger inside the tank, such as a pipe bundle, which circulates a heated transfer fluid at sufficient temperature. External equipment may be a heat exchanger or a heater, circulating some liquid from the tank. For relatively small tanks, external heat may be supplied using fired or electric radiant heaters or electric resistance tracing. Fired equipment commonly used are convection and water bath type.

Submerged Combustion Water Bath Vaporizers

These heaters have one or more burners with the flame located in submerged chamber where heat is transferred to the water and the flue gases are discharged through a bubbling tube into the water. Because of the low bath temperature, most of the heat content of the flue gases is transferred to it, and most of the water vapor in the flue gases condenses giving up the latent heat. These heaters have very low NO_x emission because of the flame chamber is cooled by bath water thermosyphon circulation through a jacket, the cooling of the flue gases and excess air control. The flue gases in contact with the water turn it slightly acidic, because the CO_2 dissolves in it, forming carbonic acid; to avoid sulfur acids formation, the fuel gas must be sweet. These heaters are used for LNG and propane vaporization.

WASTE HEAT RECOVERY

Economical and environmental considerations may lead to the use of waste heat recovery systems. Flue gases from fired equipment, combustion engines and gas turbines are common heat sources for consideration to use waste heat recovery. The recovered heat may be used in the same equipment to increase its thermal efficiency and to supply heat to other equipment. Fired equipment also may combine the heating of several process streams at different temperatures. Typical applications include combustion air and/or fuel preheating in the same equipment. Burners can be self-recuperative and self-regenerative. Some applications include additional heat input by refiring.

Heat transfer systems may have:

- Streams contact, as in bubbling flue gases in water heaters.
- No contact of streams, as in shell and tube heat exchangers.
- An intermediate heat transfer fluid by forced circulation as in pumped oil systems, or by natural circulation as in thermosyphons. The intermediate fluid may have a phase change as in heat pipes.
- A solid heat transfer media, such as in rotary or alternating regenerative devices.

In some special devices, such as combustion engine and turbine exhaust gas silencers, a fluid is circulated for heat recovery.

Applications of waste heat recovery from fired equipment, combustion engine and gas turbine flue gases include process stream heating, water heating, steam generation, liquids and solids regeneration, heat supply to absorption chillers, combined heat and power systems, and mechanical power as in turbochargers. Heat recovery equipment introduces additional head losses in the flue gas path, with the consequence

FIG. 8-42

Example Hot Oil System

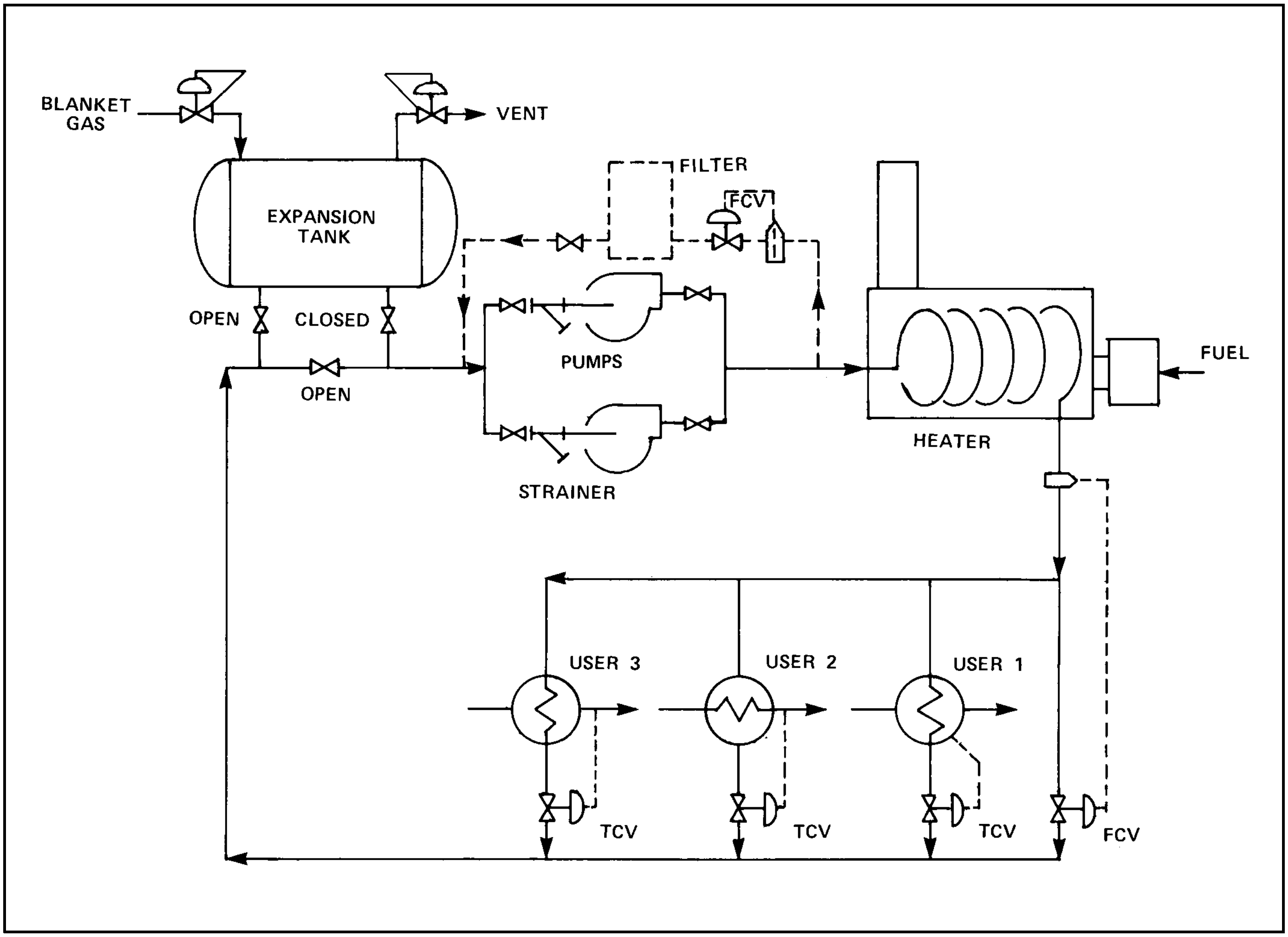

of possible changes in required stack height, fan power, and damper position. In the case of combustion engines and gas turbines, there is a loss of power.

Exhaust gases from equipment with high excess air, such as gas turbines which contain 13 to 17% molar volume of oxygen, temperatures between 850°F and 1050°F and pressures up to 10 inches water column, may be used to supply the oxygen for the combustion of fuels in fired heaters.

OXIDIZERS

In processing plants, many hazardous air pollutant (HAP) gases and some volatile liquids may be recovered or burned in flares. Some compounds can not be recovered because it is not technically or economically feasible, or can not be burned in flares because of their chemical nature or because they are too diluted in a non-combustible substance. Oxidizers, also called incinerators, are equipment for the thermal destruction of HAP. In gas processing plants oxidizers are used to thermally destroy, by oxidization, the HAP that can not be recovered nor burned in flares. In the ideal oxidizer, the wastes are converted to carbon dioxide and water, and when the wastes contain HAPs such as sulfur or halogenated compounds, they are converted to non-hazardous compounds.

The basic thermal oxidizer normally consists of a chamber through which the waste gas or atomized liquid flows with sufficient combustion air; heat is supplied to obtain a high temperature. The equipment is designed to provide sufficient residence time and turbulence for oxidation. Common range of the oxidizing chamber temperature is from 1400 to 2000°F and common residence time ranges from 0.25 to 1 second.

The higher the oxidizing temperature the higher the destruction efficiency, but also the higher the NO_x production. In addition, the incoming wastes may contain nitrogenated compounds. The selected temperature is a compromise between the efficiency and NO_x emission. Excessive NO_x may be produced, in which case a high-temperature reducing chamber may be used.

To remove non-combustible particles and to absorb secondary pollutants from effluent gases, a quench-water tank and/or a water-spraying chamber may be used.

Secondary pollutants may be hydrochloric and/or hydrofluoric and/or SO_x acids. The wastewater may be passed through a filter where particles are retained, and the wastewater is neutralized with a caustic salt, to adjust the pH, and recycled. Dynamic separators and/or filters may be used for dry particle separation.

Waste heat may be recovered with a recuperative or a regenerative exchanger to heat the incoming gases, and/or to heat a process stream or produce/reheat steam. Catalytic chambers may be provided, to improve the oxidization reaction and to reduce the energy consumption by reduction of the operating temperature to the range of 350°F to 600°F.

Concentration of the HAP may be used to reduce the oxidizer load or recovery. Concentration of the gaseous stream may be achieved by absorption or adsorption, regeneration or nonregeneration, and condensation. A fired water evaporation concentrator may be used in the case of diluted aqueous waste.

The oxidizer design data provided to the manufacturer, should include the incoming waste gas composition, maximum and minimum flow, pressure and temperature, identification of the source, fuel gas information and site data. The gas composition analysis to be supplied to the manufacturer should include, at least the components given in the Fig. 8-43.

Sulfur containing gases may be burned in a flare or oxidizer or fed to a sulfur recovery unit. The election depends on environmental regulations, sulfur content of the gas, the permitted sulfur emissions, and economical aspects. In the case where sulfur is not recovered, it may be necessary to scrub the combustion gases.

INERT GAS GENERATORS

An oxygen-free gas, containing mainly nitrogen, carbon dioxide and water vapor may be obtained with a type of "inert" gas generator consisting of a combustion chamber where air enters and the oxygen content is totally consumed by the combustion in a controlled burner. The exiting gas may be cooled by preheating the combustion air and fuel, and if needed, cooled further with a gas cooler, and then the condensed water separated. The combustion air may be obtained from a heater, boiler or gas turbine exhaust, and a refiring burner consumes the remaining oxygen. The gas may be dehydrated as needed.

ELECTRIC HEATERS

These are heaters in which the energy source is electricity, and resistances, inducing coils, or radiant elements may be the heating elements. Electric resistances, protected by an electrical-insulated sheath, may be installed internally in a vessel, a tank or a pipe, or externally around or adjacent to them, in which case external insulation may be needed. High temperature electric resistances are also used in incinerators. Also, electric radiant heaters may be used to externally heat a tank or a vessel.

Electric intensity and resistance equations may be found in Section 18.

The heat flux of a resistance, also called watt density, is the rated power per unit heating-surface area of the resistance, and indicates the potential to transmit heat. The higher the watt density, the greater the possibility for excessive sheath temperature, and may cause resistance or sheath damage or excessive temperature of the fluid film in contact with it. So the heating element selection must consider not only the heating element materials and performance, but also the fluid properties and heat transfer relationships, and due consideration must be given to the movement of the fluid around the elements.

In working with highly flammable or explosive fluids, it may not be safe to install the electric element in direct contact with the fluid, in which case an intermediate heat transfer fluid may be used.

There is a wide variety of applications for electric heaters in process plants, such as:

- Circulating fluid heaters, for liquid or gas heating or liquid vaporization.
- Bath heaters, for liquid or gas heating or liquid vaporization.
- Piping heat tracing.
- Equipment lube oil temperature control.
- Refrigerated tank foundation temperature control.
- Electric equipment space heating.
- Incinerators.

REFERENCES

1. North American Manufacturing Corp., Combustion Handbook, Second Edition, 1978.
2. Lauer, B. E., Oil & Gas Journal, Series 8-18-52 to 11-2-53.
3. Perry, R. H. and Chilton, C. H., Editors, Chemical Engineering Handbook, Fifth Edition, 1973.
4. Escoa Fintube Corp. Engineering Manual, 1979.
5. Kentube Company, Design Brochure, 1973.
6. Buthod, A. P. and Manning, W. P., University of Tulsa, Personal Communication.
7. McAdams, W. H., Heat Transmission, Third Edition, 1954.
8. Kern, D. Q., Process Heat Transfer, 1950.
9. Wimpress, P. H., Hydrocarbon Process & Petroleum Ref., Volume 42, No. 10, 117, 1963.
10. Lobo, W. E. and Evans, J. F., AIChE Trans., Volume 35, 743, 1939.
11. Nelson, W. L., Oil & Gas Journal, January 4, 1947, p. 77.
12. Dow Corning Corp., “Heat Transfer System Design Checklist,” Version 1.2, Form 24-250-85.
13. API RP 11T, “Installation and Operation of Wet Steam Generators,” USA.
14. API SPEC 12K, “Indirect-Type Oil Field Heaters,” USA.
15. API RP 12N, “Operations, Maintenance and Testing of Firebox Flame Arrestors,” USA.
16. API RP 530, “Calculation of Heater Tube Thickness in Petroleum Refineries,” USA.
17. API RP 531M, “Measurement of Noise from Fired Process Heaters,”USA.
18. API RP 532, “Measurement of Thermal Efficiency of Fired Process Heaters,” USA.
19. API RP 533, “Air Preheat Systems for Process Heaters,” USA.
20. API STD 534, “Heat Recovery Steam Generators,” USA.
21. API PUBL 535, “Burners for Fired Heaters in General Refinery Services,” USA
22. API RP 550, “Manual on Installations of Refinery Instruments and Control Systems, Part III, Fired Heaters and Inert Gas Generators.”
23. API STD 560," Fired Heaters for General Refinery Services," USA.
24. API RP 573, “Inspection of Fired Boilers and Heaters,” USA.

25. API PUBL 4365, “Characterization of Particulate Emissions from Refinery Process Heaters and Boilers,” USA.
26. AIChE, “Fired Heaters, A Guide to Performance Evaluations,” USA.
27. AGA, “Gas Engineers Handbook, 1st Edition,” Industrial Press Inc., N.Y., USA.
28. IGE/TM/2, “International Index of Safety Standards and Codes Relating to Gas Utilisation in Industry and Commerce,” The Institution of Gas Engineers, England.
29. IGE COMMUNICATION 1507, “The Development of Groundwater Heating at Pressure Reduction Stations,” The Institution of Gas Engineers, England.
30. SALFORD UNIVERSITY, Centre for Natural Gas Engineering, Gas Utilisation Courses Notes, Dr. Robert Pritchard, England.
31. NFPA 85A, “Prevention of Furnace Explosions in Fuel Oil- and Natural Gas-Fired Single Burner Boiler-Furnaces,” USA.
32. NFPA 85B, “Prevention of Furnace Explosions in Natural Gas-Fired Multiple Burner Boiler-Furnaces,” USA.
33. NFPA 85D, “Prevention of Furnace Explosions in Fuel Oil-Fired Multiple Burner Boiler-Furnaces,” USA.
34. NFPA 85G, “Prevention of Furnace Implosions in Multiple Burner Boiler-Furnaces,” USA.
35. Idelchick, I.E., Handbook of Hydraulic Resistance, 1960, Translated from Russian by Israel Program for Scientific Translations 1966, Reproduced by U.S. Department of Commerce. Russia.
36. Miller, D.S., Internal Flow Systems, Vol. 5 in the BHRA Fluid Engineering Series, 1978, England.
37. Nelson, W.L., Petroleum Refinery Engineering, 4th Edition, USA.
38. Pitts, D.R. and Sissom, L.E., Heat Transfer Theory and Problems, 1977, USA.
39. Potter, J.P., Power Plant Theory and Design, 2nd Edition, 1959, USA.
40. Pritchard, R., Guy, J.J., and Connor, N.E., Industrial Gas Utilisation, 1977, England.
41. Ganapathy, V., "Recover Heat From Waste Incineration," Hydrocarbon Processing, 1995, page 56.
42. Farthing, David C., Federal Corporation, Tech Paper #901, "Improving Boiler Room Efficiencies —Economizers," Rev. 9/00.
43. Wild, K.R., "Controlling Processes That Are Sensitive to Natural Gas Quality," BG Technology Ltd., United Kingdom, IGU 2000 World Gas Congress.
44. API RP 536, "Post Combustion NO_x Control for Equipment in General Refinery Services."
45. API RP 556, "Fired Heaters and Steam Generators."

SECTION 9

Heat Exchangers

The process engineer is frequently required to analyze heat exchanger designs, specify heat exchanger performance, and determine the feasibility of using heat exchangers in new services. This section is prepared with these specific operations in mind and is not intended as a design manual.

FUNDAMENTALS OF HEAT TRANSFER

The basic definitions and equations used in heat exchanger calculations are reviewed below:

Heat Balances

For no phase change of the hot fluid:

$$Q = \dot{m}_H \, Cp_H \, (T_{H1} - T_{H2}) \qquad \textbf{Eq 9-1}$$

For isothermal condensing of the hot fluid:

$$Q = \dot{m}_H \, \lambda_H \qquad \textbf{Eq 9-2}$$

For no phase change of the cold fluid:

$$Q = \dot{m}_C \, Cp_C \, (T_{C2} - T_{C1}) \qquad \textbf{Eq 9-3}$$

For isothermal boiling of the cold fluid:

$$Q = \dot{m}_C \, \lambda_C \qquad \textbf{Eq 9-4}$$

Basic Heat Transfer Relations

$Q = UA$ (LMTD) for single-pass designs **Eq 9-5a**

$Q = UA$ (CMTD) for multi-pass designs **Eq 9-5b**

FIG. 9-1

Nomenclature

A = area, sq ft
BP = baffle spacing, in.
C = tube count factor
Cp = specific heat, Btu/(lb • °F)
CMTD = Corrected Log Mean Temperature Difference, °F
D = diameter, in.
F = LMTD correction factor
f = ratio of one value to another
FD = free diameter, in.
G = mass velocity, lb/(sq ft • sec)
GTTD = Greatest Terminal Temperature Difference, °F
h = film coefficient, Btu/(hr • sq ft • °F)
H = height, in.
k = thermal conductivity, Btu/[(hr • sq ft • °F)/ft]
L = length, in.
LMTD = Log Mean Temperature Difference, °F
LTTD = Least Terminal Temperature Difference, °F
$\dot{m}$ = mass flowrate, lb/hr
N = number of exchangers
Np = number of passes
ΔP = pressure drop, lb/sq in.
P = pressure, lb/sq in. absolute
p = temperature efficiency
PHE = plate and frame heat exchanger
Q = heat transferred, Btu/hr
R = heat capacity rate ratio
Re = Reynolds number = $(123.9 \, DG)/\mu$
RC = tube rows crossed
r = film resistance (hr • sq ft • °F)/Btu
SP = number of baffle spaces
T = temperature, °F
t = temperature, °F
TMTD = True Mean Temperature Difference, °F
U = overall heat transfer coefficient, Btu/(hr • sq ft • °F)
W = width, in.
WTD = weighted temperature difference, °F
X = weight fraction
λ = latent heat, Btu/lb
μ = viscosity, centipoise
ρ = density, lb/cu ft

Subscripts

b = boiling
C = cold fluid
c = condensing
f = fouling
H = hot fluid
i = inside
in = inlet
L = liquid
m = mean value
n = n^{th} value
o = outside
out = outlet
2Φ = two-phase
w = wall
v = vapor
1 = first value
2 = second value

Shell and Tube Exchangers

For tubular heat exchangers, the heat transfer area generally referred to is the effective outside bare surface area of the tubes, and the overall heat transfer coefficient must also be based on this area.

Effective Temperature Difference

In most instances the local temperature difference between the hot stream and the cold stream will not have a constant value throughout a heat exchanger, and so an effective average value must be used in the rate equation. The appropriate average depends on the configuration of the exchanger. For simple countercurrent and co-current exchangers (Fig. 9-2), the Log Mean Temperature Difference (LMTD) applies.

FIG. 9-2

Countercurrent Flow and Co-current Flow

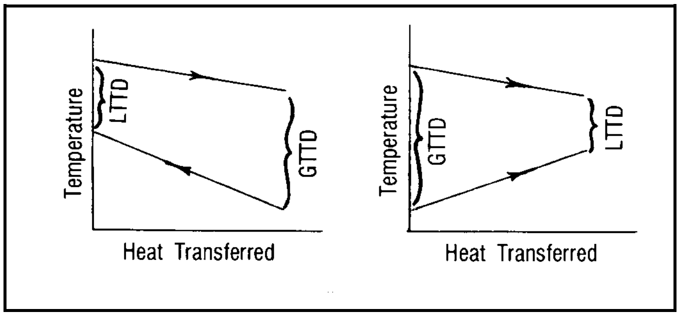

Fig. 9-3 defines LMTD in terms of Greatest Terminal Temperature Difference (GTTD) and Least Terminal Temperature Difference (LTTD), where "terminal" refers to the first or last point of heat exchange in the heat exchanger.

For exchanger configurations with flow passes arranged to be partially countercurrent and partially co-current, it is common practice to calculate the LMTD as though the exchanger were in countercurrent flow, and then to apply a correction factor to obtain the effective temperature difference.

$$\text{CMTD} = (\text{LMTD})\,(\text{F}) = \text{Corrected Mean Temperature Difference} \qquad \textbf{Eq 9-6}$$

The magnitude of the correction factor, F, depends on the exchanger configuration and the stream temperatures. Values of F are shown in Figs. 9-4, 9-5, 9-6, and 9-7 for most common exchanger arrangements. In general if the value obtained for F is less than 0.8, it is a signal that the selected exchanger configuration is not suitable, and that one more closely approaching countercurrent flow should be sought.

Heat Exchange with Non-Linear Behavior

The above Corrected Log Mean Temperature Difference (CMTD) implicitly assumes a linear relation between duty and stream temperature change. Some situations for which this assumption is not applicable include process streams which undergo a very large temperature change so that the physical properties change significantly, multi-component condensing or boiling with non-linear duty vs. temperature curves, and exchangers in which the process stream undergoes both phase change and sensible cooling or heating.

These situations may be handled by dividing the exchanger into zones which may be treated individually with the linear assumption. The overall exchanger performance may be represented in terms of the weighted average performance of the zones in the overall rate equation. The following equations may be taken as the rate equations for the overall exchanger and for the nth zone of the exchanger.

$$Q_{Total} = U_{wtd} A_{Total}\,(\text{WTD}) \qquad \textbf{Eq 9-7}$$

$$Q_n = U_n\,A_n\,(\text{LMTD})_n \qquad \textbf{Eq 9-8}$$

Then the weighted temperature difference may be defined as:

$$(\text{WTD}) = \frac{\Sigma\,[U_nA_n(\text{LMTD})_n]}{\Sigma[U_nA_n]} = \frac{Q_{Total}}{\Sigma[Q_n/(\text{LMTD})_n]} \qquad \textbf{Eq 9-9}$$

And the weighted overall heat transfer coefficient becomes:

$$U_{wtd} = \frac{Q_{Total}}{A_{Total}(\text{WTD})} = \frac{\Sigma[Q_n/(\text{LMTD})_n]}{A_{Total}} \qquad \textbf{Eq 9-10}$$

In multi-component, two-phase (vapor/liquid) flow regimes undergoing heat transfer, the vapor and liquid composition changes that occur are related to the extent of continuous contact of the two phases. If the vapor phase is maintained in contact with the liquid, the total change in enthalpy (or other properties) that accompanies the composition change is termed "integral." If the vapor is continuously removed from contact with the liquid as it is formed, the property changes are termed "differential." An accurate representation of temperature difference and heat transfer in these cases depends on correct consideration of the phase separation that occurs in the heat transfer equipment.

Overall Heat Transfer Coefficient

$$U_o = \frac{1}{\left[\frac{1}{h_o} + \left(\frac{A_o}{A_i}\right)\left(\frac{1}{h_i}\right) + r_w + r_{fo} + \left(\frac{A_o}{A_i}\right) r_{fi}\right]} \qquad \textbf{Eq 9-11}$$

Metal Resistance for Plain Tubes

The metal resistance is calculated by the following equation:

$$r_w = \left(\frac{D_o}{24k_w}\right) \ln\left(\frac{D_o}{D_i}\right) \qquad \textbf{Eq 9-12}$$

Values of the tube metal thermal conductivity are found in Fig. 9-8 for several materials of construction at different metal temperatures.

Fouling Resistances

Fouling resistances depend largely upon the types of fluid being handled, i.e., the amount and type of suspended or dissolved material which may deposit on the tube walls, susceptibility to thermal decomposition, etc., and the velocity and temperature of the streams. Fouling resistance for a particular service is usually selected on the basis of experience with similar streams. Some typical values are given in Fig. 9-9 and in the TEMA Standards.

Film Resistances

Equations for calculating the film coefficients, h_o, and h_i, for the simpler common geometries, as functions of flow rate and fluid properties, may be found in heat transfer references and in engineering handbooks. Some typical values of film resistances are given in Fig. 9-11. Some common overall heat transfer coefficients are shown in Fig. 9-9.

Film coefficients, film resistances, and overall heat transfer coefficient are related as follows: $h_i = 1/r_i$, $h_o = 1/r_o$, and $U = 1/\Sigma r$ (as in Eq 9-11).

FIG. 9-3

LMTD Chart

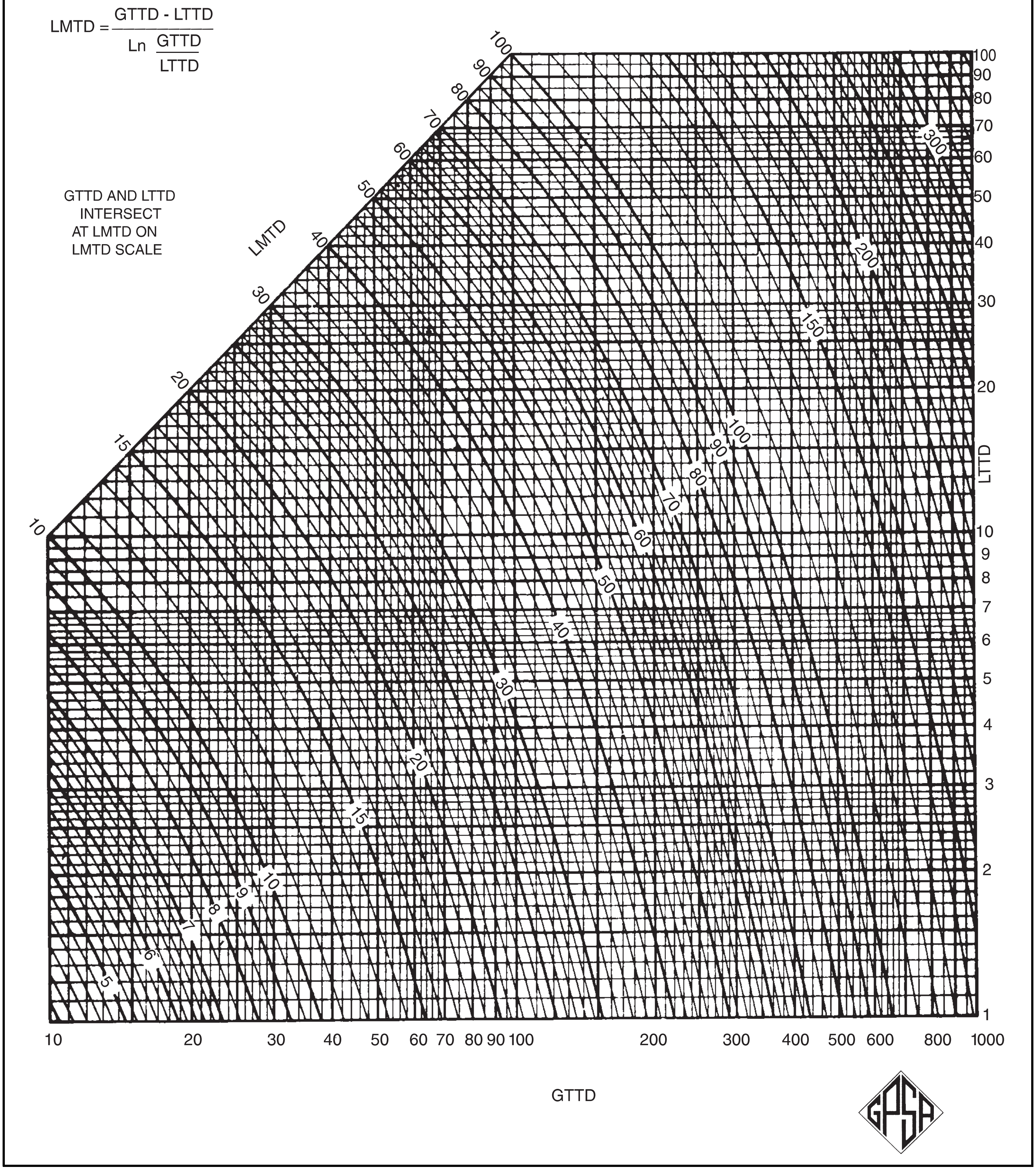

FIG. 9-4

LMTD Correction Factor (1 shell pass; 2 or more tube passes)

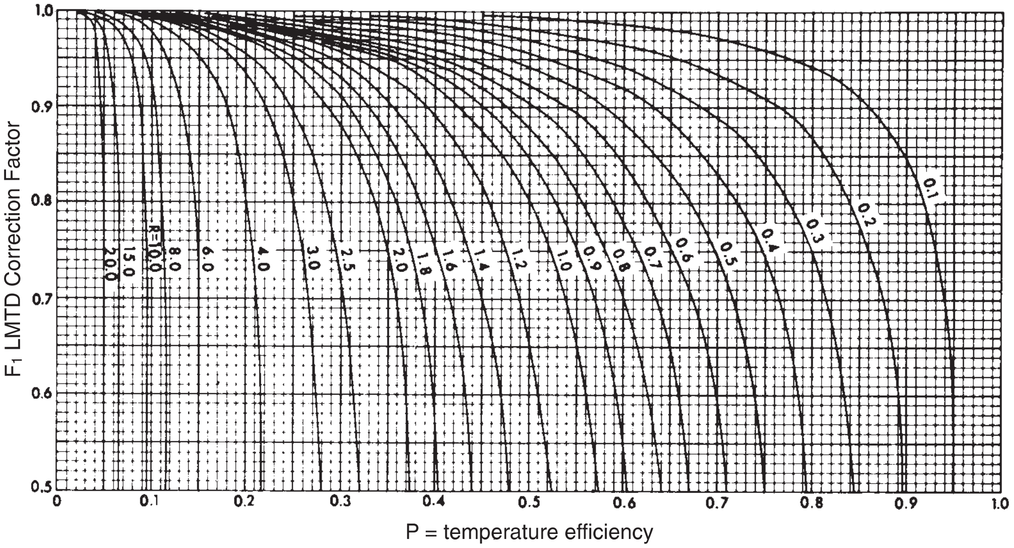

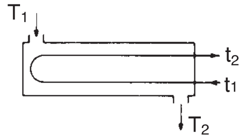

LMTD Correction Factor

1 shell pass 2 or more tube passes

$P = \frac{t_2 - t_1}{T_1 - t_1}$ $R = \frac{T_1 - T_2}{t_2 - t_1}$ CMTD = (LMTD)(F_1)

FIG. 9-5

LMTD Correction Factor (2 shell passes; 4 or more tube passes)

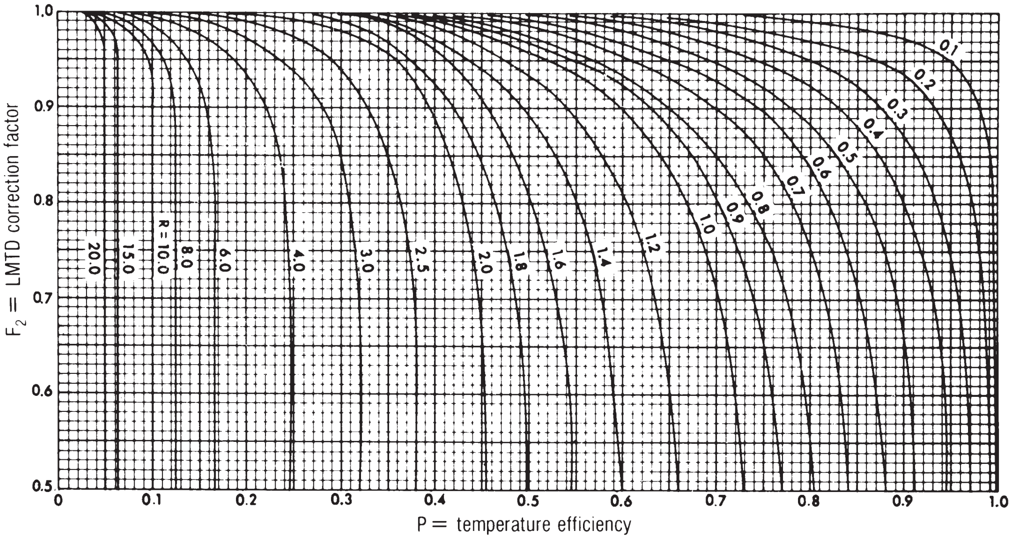

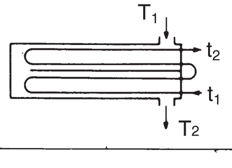

LMTD Correction Factor

2 shell passes 4 or more tube passes

$P = \frac{t_2 - t_1}{T_1 - t_1}$ $R = \frac{T_1 - T_2}{t_2 - t_1}$ CMTD = (LMTD)(F_2)

FIG. 9-6

LMTD Correction Factor (3 shell passes; 6 or more tube passes)

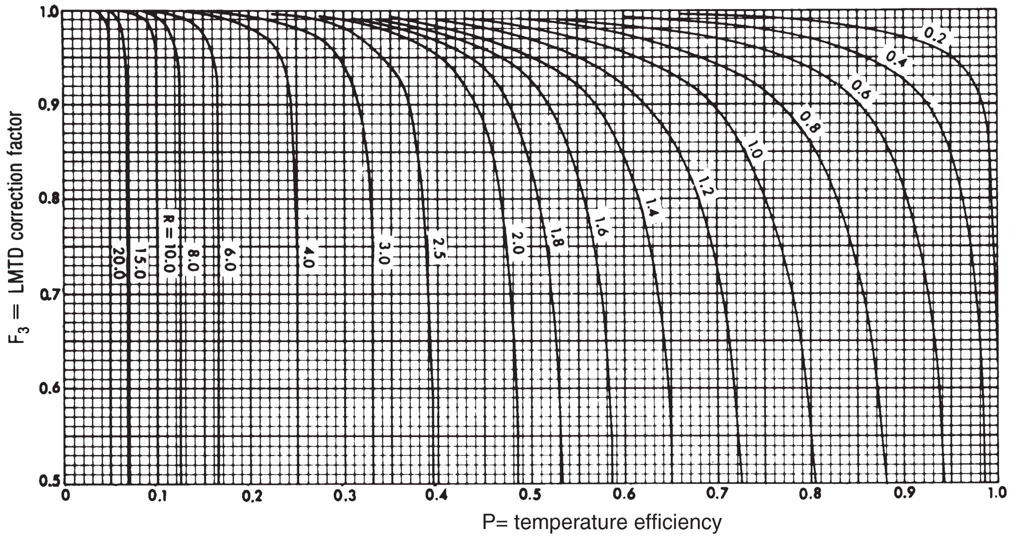

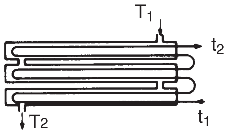

LMTD Correction Factor

3 shell passes — 6 or more tube passes

$P = \frac{t_2 - t_1}{T_1 - t_1}$ $R = \frac{T_1 - T_2}{t_2 - t_1}$ CMTD = (LMTD)(F_3)

FIG. 9-7

LMTD Correction Factor (4 shell passes; 8 or more tube passes)

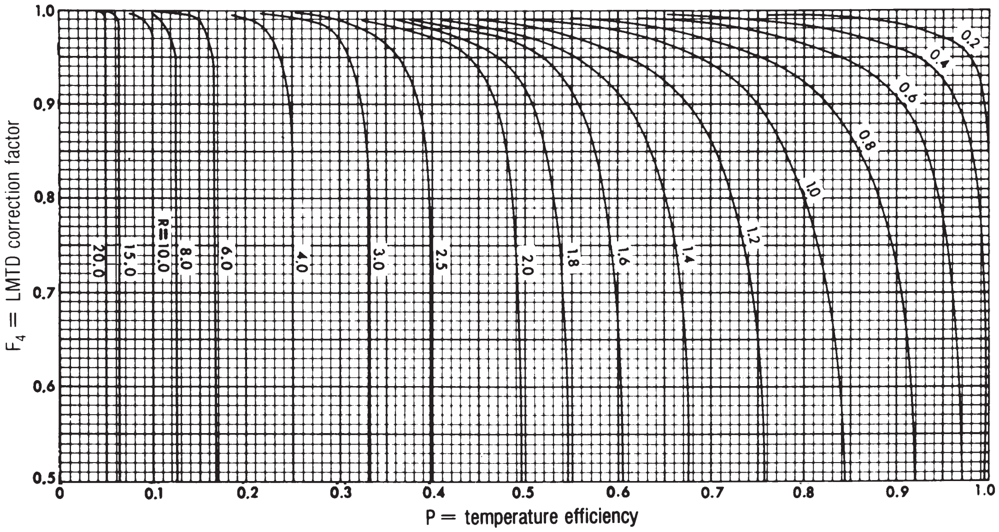

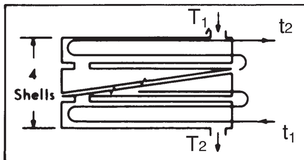

LMTD Correction Factor

4 shell passes — 8 or more tube passes

$P = \frac{t_2 - t_1}{T_1 - t_1}$ $R = \frac{T_1 - T_2}{t_2 - t_1}$ CMTD = (LMTD)(F_4)

FIG. 9-8

Typical* Metal Thermal Conductivities, k_w

Material	Btu/[(hr • sq ft • °F)/ft] Metal Temperature 200°F	400°F	600°F	800°F
Aluminum, 3003 Tempered	104	106	–	–
Carbon Steel	29	28	26	24
Carbon Moly (½%) Steel	25	25	24	22
2¼% Cr, 1% Mo Steel	21	22	21	20
13 Cr	16	16	16	16
304 Stainless Steel	9.3	10	11	12
Admiralty	70	79	89	–
Copper	225	224	223	–
90-10 CuNi	30	34	42	49
70-30 CuNi	18	21	25	30
Nickel 200	39	35	33	33
NiFeCrMoCu (Alloy 825)	7.1	8.1	9.1	10
Titanium	12	11.5	11.2	11.2

* Excerpt from TEMA Standards

FIG. 9-9

Typical Heat Transfer Coefficients, U, and Fouling Resistances, r_f

Service and (r_f)	U	Service and (r_f)	U
Water (0.002)/			
100 psi Gas (0.001)	35-40	Rich (0.001)/Lean Oil (0.002)	80-100
300 psi Gas (0.001)	40-50	C_3 Liq/C_3 Liq (0.001)	110-130
700 psi Gas (0.001)	60-70	MEA/MEA (0.002)	120-130
1000 psi Gas (0.001)	80-100	100 psi Gas/500 psi Gas	50-70
Kerosene (0.001)	80-90	1000 psi Gas/1000 psi Gas	60-80
MEA (0.002)	130-150	1000 psi Gas/Cond. C_3 (0.001)	60-80
Air (0.002)	20-25	Steam (0.0005) Reboilers	140-160
Water (0.001)	180-200	Hot Oil (0.002) Reboilers	90-120
Condensing with water (0.002)/		Heat Transfer Fluid (0.001) Reboilers	80-110
C_3 or C_4 (0.001)	125-135		
Naphtha (0.001)	70-80		
Still Overhead (0.001)	70-80		
Amine (0.002)	100-110		

U in Btu/(hr • sq ft • °F)
r_f in (hr • sq ft • °F)/Btu

Performance Evaluation With Sensible Heat Transfer

To predict the performance of a particular exchanger in a new service or to compare different designs for a given service, it is useful to understand the effects of changes in the variables on film resistance to heat transfer and pressure drop. If variables (subscripted "1") are used for a reference basis (as those values given in Fig. 9-11 are intended to be) a proration to a new condition (subscripted "2") can be applied based on ratioing the correlation of the variable at the new condition to the reference condition. For film coefficients and pressure drop determinations, Fig. 9-10 summarizes these ratios for the applicable variables. If tube side film resistance and pressure drop at new conditions involving turbulent flow were desired, the variable arrays would be:

$$\frac{h_i}{h_2} = \frac{r_2}{r_1} = \left(\frac{\mu_2}{\mu_1}\right)^{0.47}\left(\frac{k_1}{k_2}\right)^{0.67}\left(\frac{Cp_1}{Cp_2}\right)^{0.33}\left(\frac{G_1}{G_2}\right)^{0.8}\left(\frac{D_{i2}}{D_{i1}}\right)^{0.2} \qquad \textbf{Eq 9-13}$$

and,

$$\frac{\Delta P_2}{\Delta P_1} = \left(\frac{\mu_2}{\mu_1}\right)^{0.2}\left(\frac{G_2}{G_1}\right)^{1.8}\left(\frac{\rho_1}{\rho_2}\right)\left(\frac{D_{i1}}{D_{i2}}\right)^{1.2}\left(\frac{Np_2}{Np_1}\right) \qquad \textbf{Eq 9-14}$$

Shell side film resistance and shell side pressure drop have similar arrays. In Fig. 9-10 all the variables that change in a vertical column apply where the flow regime is appropriate.

The stream types and flow regimes shown in Fig. 9-11 are typical for most fluids encountered in gas plants. These base values of film resistance and pressure drop are used with the relationships given in Fig. 9-10 to evaluate an exchanger design or to project the performance of an exchanger in a new service. This can best be understood by following Example 9-1.

Example 9-1 — The heat exchanger specification sheet, Fig. 9-12, shows the heat transfer requirements and the mechanical design configuration for an oil-to-oil exchanger. Evaluate the indicated performance of this design.

Solution Steps

1. Check the heat balance on the data sheet. (See Fig. 9-12)

$$Q_H/Q_C = \frac{[\dot{m}_H Cp_H(T_{H1} - T_{H2})]}{[\dot{m}_C Cp_C(T_{C2} - T_{C1})]}$$

$$= \frac{[475{,}723(0.542)\ (197 - 100)]}{[650{,}860(0.60)\ (124 - 60)]} = 1.0$$

2. Calculate the LMTD.

$$\begin{array}{ccc} 197 & \rightarrow & 100 \\ \underline{124} & \leftarrow & \underline{60} \\ 73 & & 40 \end{array}$$

$$\text{LMTD} = \frac{(73 - 40)}{\ln(73/40)} = 54.9°\text{F}$$

Since the exchanger is countercurrent flow, the CMTD is the LMTD.

3. Check the required heat transfer coefficient.

$$U = \frac{25{,}000{,}000}{(4525)(54.9)} = 100.6 \text{ Btu/(hr} \bullet \text{sq ft} \bullet °\text{F)}$$

4. Calculate the tube side pressure drop and resistance to heat transfer with the relationships shown in Fig. 9-10 and the values shown in Fig. 9-11.

The total cross sectional flow area

$$= \frac{[784\,\pi\,(D_i)^2]}{4} = (784)\ (0.3019) = 237 \text{ sq in.}$$

$$G = \frac{(650{,}860)}{[(3600)(237/144)]} = 109.8 \text{ lb/(sq ft} \bullet \text{sec)}$$

$$Re = \frac{(123.9)(0.62)(109.8)}{0.21} = 40{,}200$$

Therefore, it is turbulent flow since Re > 2000.

From Fig. 9-10 (see Note †), the ratio of the second to the first resistance is:

$$(r_i)_2 = (f)\,(r_i)_1$$

FIG. 9-10

Variables in Exchanger Performance

Variable*	Flow Regime	$r_2 = (f) \cdot (r_1)$†		$\Delta P_2 = (f) \cdot (\Delta P_1)$†	
		Shell (f)	**Tube (f)**	**Shell (f)**	**Tube (f)**
Viscosity	Turbulent	$(\mu_2/\mu_1)^{0.27}$	$(\mu_2/\mu_1)^{0.47}$	$(\mu_2/\mu_1)^{0.15}$	$(\mu_2/\mu_1)^{0.2}$
Viscosity – bulk to wall correction	Streamline		$\left[\frac{\mu_1}{\mu_2} \cdot \frac{\mu_{w2}}{\mu_{w1}}\right]^{0.14}$		(μ_2/μ_1)
Thermal conductivity	Turb. or Streamline	$(k_1/k_2)^{0.67}$	$(k_1/k_2)^{0.67}$		
Sp. heat capacity	Turb. or Streamline	$(C_{p1}/C_{p2})^{0.33}$	$(C_{p1}/C_{p2})^{0.33}$		
Mass velocity	Turbulent	$(G_1/G_2)^{0.6}$	$(G_1/G_2)^{0.8}$	$(G_2/G_1)^{1.85}$	$(G_2/G_1)^{1.8}$
(or mass flowrate)	Streamline		$(G_1/G_2)^{0.33}$		(G_2/G_1)
Density	Turb. or Streamline			(ρ_1/ρ_2)	ρ_1/ρ_2
Tube diameter	Turbulent	$(D_{o2}/D_{o1})^{0.4}$	$(D_{i2}/D_{i1})^{0.2}$	$(D_{o1}/D_{o2})^{0.15}$	$(D_{i1}/D_{i2})^{1.2}$
Tube diameter	Streamline		$(D_{i2}/D_{i1})^{0.33}$		$(D_{i1}/D_{i2})^2$
Tube length	Streamline		$(L_2/L_1)^{0.33}$		
Tube passes	Turb. or Streamline				(N_{p2}/N_{p1})
No. baffle spaces	Turb. or Streamline			SP_2/SP_1	
No. tube rows crossed‡				RC_2/RC_1	

* Use consistent units for any one variable in both cases.

† f is the ratio of the new value to the old value for a given variable. The overall f is the product of the individual fs.

‡ Number of rows of tubes exposed to cross flow (as opposed to parallel flow). This number is determined by baffle and bundle geometry

FIG. 9-11

Base Values for Use with Fig. 9-10(1)

Fluid	Flow Regime	Local r	Tubeside (One Pass)						
			k	**Cp**	**ρ**	**ΔP/ft**	**$\mu^{(2)}$**	**G_i**	**D_i**
Water	Turbulent	0.0009	0.358	1.0	62.1	0.068	0.764	265	0.62
HC Oil	Turbulent	0.0038	0.0788	0.5	46.9	0.061	0.726	185	0.495
Methane	Turbulent	0.0058	0.02	0.54	0.27	0.137	0.0113	31.2	0.62
HC Oil	Streamline	0.049	0.0716	0.526	51.3	(4)	(3)	42.3	0.834
			Shellside						
			k	**Cp**	**ρ**	**$\Delta P^{(6)}$**	**$\mu^{(5)}$**	**$G_o^{(7)}$**	**D_o**
Water	Turbulent	0.0005	0.395	1.007	59.8	0.23	0.282	156.7	0.625
HC Oil	Turbulent	0.0028	0.0762	0.557	46.8	0.25	0.549	132.4	0.625
Methane	Turbulent	0.0038	0.037	0.655	0.23	0.09	0.0182	6.19	0.625

(1) Symbols and units are defined in Fig. 9-1

(2) Bulk average viscosity

(3) 6.62 and Wall viscosity is 27.75

(4) 0.14 psi for a 17 ft tube

(5) Average film viscosity

(6) Crossflow ΔP/baffle space/10 tube rows crossed between centroids of cut openings.

(7) Average crossflow mass velocity (see crossflow area calculation in Fig 9-13)

Use base values from Fig. 9-11 for $(r_i)_1$ conditions.

$$f = \left(\frac{\mu_2}{\mu_1}\right)^{0.47}\left(\frac{k_1}{k_2}\right)^{0.67}\left(\frac{Cp_1}{Cp_2}\right)^{0.33}\left(\frac{G_1}{G_2}\right)^{0.8}\left(\frac{D_{i2}}{D_{i1}}\right)^{0.2}$$

$$= \left(\frac{0.21}{0.726}\right)^{0.47}\left(\frac{0.0788}{0.078}\right)^{0.67}\left(\frac{0.50}{0.600}\right)^{0.33}\left(\frac{185}{109.8}\right)^{0.8}\left(\frac{0.62}{0.495}\right)^{0.2}$$

$$= 0.840$$

Basis: (Inside Area)

$(r_i)_2 = f(r_i)_1$ and $(r_i)_1 = 0.0038$ from Fig. 9-11

$$= (0.840)\,(0.0038)$$

$$= 0.0032\ (\text{hr} \bullet \text{sq ft} \bullet {}^\circ\text{F})/\text{Btu}$$

From Fig. 9-10 (see Note †), the ratio of the second to the first pressure drop is:

$$(\Delta P_i)_2 = (f)\,(\Delta P_i)_1$$

Use base values from Fig. 9-11 for $(\Delta P_i)_1$ conditions.

$$f = \left(\frac{\mu_2}{\mu_1}\right)^{0.2}\left(\frac{G_2}{G_1}\right)^{1.8}\left(\frac{\rho_1}{\rho_2}\right)\left(\frac{D_{i1}}{D_{i2}}\right)^{1.2}\left(\frac{Np_2}{Np_1}\right)$$

$$= \left(\frac{0.21}{0.726}\right)^{0.2}\left(\frac{109.8}{185}\right)^{1.8}\left(\frac{46.9}{38.3}\right)\left(\frac{0.495}{0.62}\right)^{1.2}\left(\frac{1}{1}\right)$$

$$= 0.285$$

$$(\Delta P_i)_2 = (f)\,(\Delta P_i)_1 = (0.285)\,(0.061) = 0.017\ \text{psi/ft}$$

For a 30 ft tube length the total ΔP is 30(0.017) = 0.51 psi

5. Calculate the shell side pressure drop and resistance to heat transfer with the relationships shown in Fig. 9-10, the values shown in Fig. 9-11, and the data shown in Fig. 9-13.

$$G = \frac{(475{,}723)}{(3600)(156.8/144)} = 121.4\ \text{lb/(sq ft} \bullet \text{sec)}$$

From Fig. 9-10 (see Note †), the ratio of the new to the old resistance is:

$$(r_o)_2 = (f)\,(r_o)_1$$

Use base values from Fig. 9-11 for $(r_o)_1$ conditions.

$$f = \left(\frac{\mu_2}{\mu_1}\right)^{0.27}\left(\frac{k_1}{k_2}\right)^{0.67}\left(\frac{Cp_1}{Cp_2}\right)^{0.33}\left(\frac{G_1}{G_2}\right)^{0.6}\left(\frac{D_{o2}}{D_{o1}}\right)^{0.4}$$

$$= \left(\frac{0.34}{0.549}\right)^{0.27}\left(\frac{0.0762}{0.077}\right)^{0.67}\left(\frac{0.577}{0.542}\right)^{0.33}\left(\frac{132.4}{121.4}\right)^{0.6}\left(\frac{0.75}{0.625}\right)^{0.4}$$

$$= 0.998$$

$$(r_o)_2 = (f)(r_o)_1 = (0.998)(0.0028) = 0.0028\ (\text{hr} \bullet \text{sq ft} \bullet {}^\circ\text{F})/\text{Btu}$$

From Fig. 9-10 (see Note †), the ratio of the new to the old pressure drop is:

$$(\Delta P_o)_2 = (f)\,(\Delta P_o)_1$$

Use base values from Fig. 9-11 for $(\Delta P_o)_1$ conditions. Obtain tube rows crossed between baffle window centroids from Fig. 9-13.

$RC_2 = 23$ ($RC_1 = 10$ per note on Fig. 9-11)

Obtain the number of crossflow spaces, which is one more than the number of baffles, from Fig. 9-12.

$SP_2 = 19$ [$SP_1 = 1$ per note on Fig. 9-11 since $(\Delta P_o)_1$ is for one baffle space.]

$$f = \left(\frac{\mu_2}{\mu_1}\right)^{0.15}\left(\frac{G_2}{G_1}\right)^{1.85}\left(\frac{\rho_1}{\rho_2}\right)\left(\frac{D_{o1}}{D_{o2}}\right)^{0.15}\left(\frac{SP_2}{SP_1}\right)\left(\frac{RC_2}{RC_1}\right)$$

$$= \left(\frac{0.34}{0.549}\right)^{0.15}\left(\frac{121.4}{132.4}\right)^{1.85}\left(\frac{46.8}{41.2}\right)\left(\frac{0.625}{0.750}\right)^{0.15}\left(\frac{19}{1}\right)\left(\frac{23}{10}\right)$$

$$= 38.3$$

$$(\Delta P_o)_2 = (f)\,(\Delta P_o)_1 = (38.3)\,(0.25) = 9.58\ \text{psi}$$

6. Calculate the tube metal resistance.

$$D_o = 0.75\ \text{in.}$$

$$D_i = 0.62\ \text{in.}$$

k_w = 30 Btu/[(hr • sq ft • °F)/ft] , from Fig. 9-8.

$$r_w = \frac{D_o}{24\,k_w}\left[\ln\left(\frac{D_o}{D_i}\right)\right] = \frac{0.75}{(24)(30)}\left[\ln\left(\frac{0.75}{0.62}\right)\right]$$

$$= 0.0002\ (\text{hr} \bullet \text{sq ft} \bullet {}^\circ\text{F})/\text{Btu}$$

7. Calculate the overall heat transfer coefficient.

$$\Sigma r = r_i\left(\frac{A_o}{A_i}\right) + r_o + r_w + r_{fo} + r_{fi}\left(\frac{A_o}{A_i}\right)$$

$$= 0.0032\left(\frac{0.1963}{0.1623}\right) + 0.0028 + 0.0002 + 0.0020$$

$$+ 0.001\left(\frac{0.1963}{0.1623}\right) = 0.0101$$

$$U = \frac{1}{\Sigma r} = \frac{1}{0.0101} = 99.0\ \text{Btu/(hr} \bullet \text{sq ft} \bullet {}^\circ\text{F)}$$

8. Compare the required heat transfer coefficient calculated in step 3 to the value calculated in step 7. (Available U = 99.0; required U = 100.6) The available value is 1.6% less than the required value, and the calculated pressure drops are less than the pressure drops allowed in Fig. 9-12. Therefore, by these calculations, the unit will perform adequately.

CONDENSERS

The purpose of a condenser is to change a fluid stream from the vapor state to the liquid state by removing the heat of vaporization. The fluid stream may be a pure component or a mixture of components. Condensation may occur on the shell side or the tube side of an exchanger oriented vertically or horizontally.

Condensing the overhead vapors of a distillation column is an example of condensing a mixed vapor stream. A vertical exchanger flanged directly to the top of the column might be used. The condensed liquid drains back into the column countercurrent to the vapor entering the condenser. The major concerns in designing this type exchanger are keeping the vapor velocity sufficiently low to prevent flooding the exchanger and evaluating an appropriate temperature profile at the condensing surface to determine an effective temperature difference. The technical literature addresses criteria for flooding determination[1] and special flow characteristics of falling liquid films. A useful estimate for determining an effective temperature difference can be made by assuming an isothermal condensate film at the saturation temperature of the last condensate formed. If the condensing temperature range exceeds 10°F, consulting a specialist is recommended for a more rigorous calculation procedure.

FIG. 9-12

Heat Exchanger Specification Sheet

1		Job No.
2	Customer	Reference No.
3	Address	Proposal No.
4	Plant Location	Date Rev.
5	Service of Unit Lean Oil to Rich Oil Exchanger	Item No.
6	Size 30-360 Type NEN (Hor/Vert)	Connected In Parallel Series
7	Surf./Unit (Gross/Eff.) 4525 Sq Ft: Shells/Unit One	Surf/Shell (Gross/Eff.) 4525 SqFt

8	PERFORMANCE OF ONE UNIT					
9	Fluid Allocation		Shell Side		Tube Side	
10	Fluid Name		Lean Oil		Rich Oil	
11	Fluid Quantity, Total	Lb/Hr	475,723		650,860	
12	Vapor (In/Out)					
13	Liquid		475,723	475,723	650,860	650,860
14	Steam					
15	Water					
16	Noncondensable					
17	Temperature (In/Out)	°F	197	100	60	124
18	Density (#/ft3) AVG.		41.2		38.3	
19	Viscosity, Liquid (AVG.)		0.34		0.21	
20	Molecular Weight, Vapor					
21	Molecular Weight, Noncondensable					
22	Specific Heat (AVG.)	Btu/Lb °F	0.542		0.600	
23	Thermal Conductivity	Btu Ft / Hr Sq Ft °F	0.077 (AVG.)		0.078 (AVG.)	
24	Latent Heat	Btu/Lb @ °F				
25	Inlet Pressure	Psia	124.7		449.7	
26	Velocity	Ft/S				
27	Pressure Drop, Allow./Calc.	PSI	12 / 9.58		10 / 0.51	
28	Fouling Resistance (Min.)		0.0020		0.0010	

29 Heat Exchanged 25,000,000 Btu/Hr: MTD (Corrected) 54.9 °F

30 Transfer Rate, Service 100.6 Clean 148.4 Btu/Hr Sq Ft °F

31	CONSTRUCTION OF ONE SHELL				Sketch (Bundle/Nozzle Orientation)
32			Shell Side	Tube Side	
33	Design/Test Pressure	Psig	185 /Code	500 /Code	
34	Design Temperature	°F	650	650	
35	No. Passes per Shell		One	One	
36	Corrosion Allowance	In.	0.0625	0.0625	
37	Connections Size & Rating	In	10"	14"	
38		Out	10"	14"	
39		Intermediate			

40 Tube No. 784 OD 0.75 In.; Thk (Min/Avg) 0.065 In.; Length 30 Ft; Pitch 0.9375 In. X ⊲▸ 30 △▸ 60 □▸ 90 ◇▸ 45

41	Tube Type SA-214 (welded steel)	Material
42	Shell SA-516-70 ID 30 OD In.	Shell Cover (Integ.) (Remov.)
43	Channel or Bonnet (2) SA-516-70 (Int.)	Channel Cover (2) SA-516-70 (Rem.)
44	Tubesheet-Stationary (2) SA-516-70	Tubesheet -Floating
45	Floating Head Cover	Impingement Protection
46	Baffles-Cross SA-283-C Type Segmented	% Cut (Diam/Area) 34 Spacing: c/c 18-5/8 In.
47	Baffles-Long	Seal Type
48	Supports-Tube SA-283-C U-Bend	Type
49	Bypass Seal Arrangement Spacers	Tube-Tubesheet Joint
50	Expansion Joint NONE	Type

51 ρv^2-Inlet Nozzle 1717 Bundle Entrance 2220 Bundle Exit 1210

52 Gaskets-Shell Side Tube Side

53 -Floating Head

54 Code Requirements ASME Sec. VIII Div 1 (with Stamp) TEMA Class "C"

55 Weight/Shell 20,600 Filled with Water 29,900 Bundle Lb.

56 Remarks

FIG. 9-13

Heat Exchanger Detail Design Results

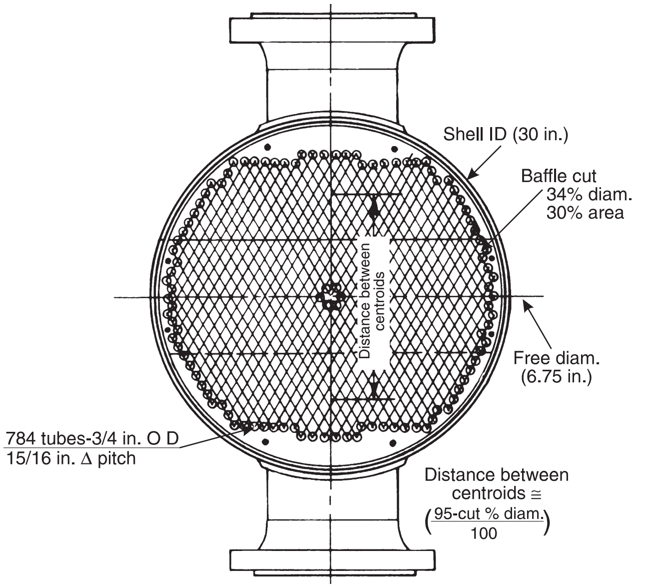

Leakage – use TEMA tolerances		
tube hole = 576 x 0.75"π x 1/64"	=	21.2 sq in
shell crack = 30"π x 0.175" x 0.60	=	9.9 sq in
		31.1 sq in
Window flow area:		
window area = (0.237) $(30")^2$	=	213.3 sq in
tubes in window = (208) (0.785) $(0.75")^2$	=	91.8 sq in
		121.5 sq in
		leak 31.1 sq in
		152.6 sq in
Cross flow area:		
Free area = 6.75" x 18 $^5/_8$"	=	125.7 sq in
Leakage	=	31.1 sq in
Net cross flow area	=	156.8 sq in

BP = baffle pitch = 18 $^5/_8$"
FD = free diameter = 6.75"
Note: window area ≅ cross flow area

The condensing of a pure component occurs at a constant temperature equal to the saturation temperature of the incoming vapor stream. Frequently a vapor enters a condenser superheated and must have the sensible heat removed from the vapor before condensation can occur. If the condensing surface temperature is greater than the incoming vapor saturation temperature, the superheat in the vapor is transferred to the cold surface by a sensible heat transfer mechanism ("drywall" condition). If the condensing surface temperature is less than the saturation temperature of the incoming vapor, a condensate film will be formed on the cold surface. The sensible heat is removed from the vapor at the condensate-vapor interface by vaporizing (flashing) condensate so that the heat of vaporization is equal to the sensible heat removed from the vapor. Under this "wet wall" condition, the effective temperature of the vapor is the saturation temperature, and the effective heat transfer mechanism is condensation. The determination of the point in the desuperheating zone of a condenser where "drywall" conditions cease and "wet wall" conditions begin is a trial and error procedure. A method frequently employed to give a safe approximation of the required surface is to use the condensing coefficient and the CMTD based on the vapor saturation temperature to calculate the surface required for both the desuperheating zone and the condensing zone.

The following Example 9-2 will illustrate the use of the heat release curve to calculate the surface required and the LMTD for each zone in a condenser for a pure component application.

Example 9-2 — A propane refrigerant condenser is required to condense the vapor stream using the heat release curve as shown in Fig. 9-14. This stream enters the condenser superheated and leaves the condenser as a subcooled liquid. Assume that a single-tube pass, single-shell pass, counterflow exchanger is used so that LMTD correction factors do not apply. Note that the propane is on the shell side. The overall heat transfer coefficients for each zone are as follows:

Desuperheating: (180°F to 108°F)

U_v = 69.9 Btu/(hr • sq ft • °F)

h_v = 111.1 Btu/(hr • sq ft • °F)

Condensing: (108°F to 108°F)

U_c = 140.0 Btu/(hr • sq ft • °F)

Subcooling: (108°F to 95°F)

U_L = 114.5 Btu/(hr • sq ft • °F)

Solution Steps

1. Calculate the surface temperature (outside wall) on the vapor side at the refrigerant stream inlet using the following equation:[2]

FIG. 9-14

Propane Condensing Curve

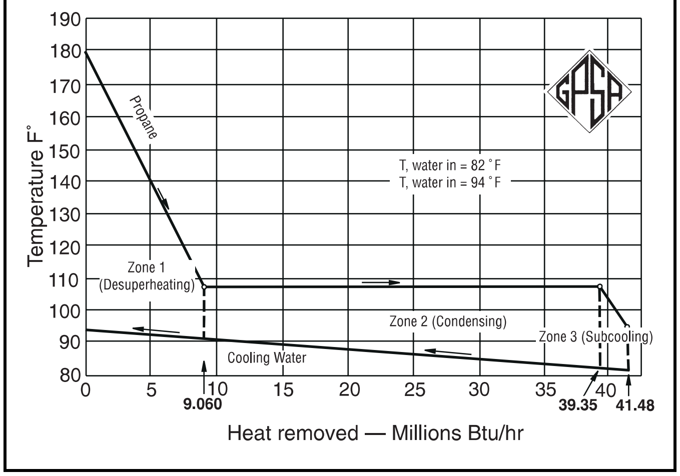

$$T_{wo} = T_v - [U_v (T_v - T_C)/h_v]$$

2. If the surface temperature calculated in step 1 is greater than the vapor saturation temperature, calculate the amount of desuperheating that will be done by a sensible heat transfer mechanism. If the surface temperature is less than the vapor saturation temperature, assume that the desuperheating duty will be done by a condensing heat transfer mechanism.
3. Obtain the duty for the appropriate temperature ranges from Fig. 9-14.
4. Solve the equation Q = UA (LMTD) for the required surface area in each zone. The sum of these areas is the surface required for the exchanger.

$$T_{wo} = 180 - \left[\frac{69.9\,(180 - 94)}{111.1}\right] = 125.90°F$$

The surface temperature at the vapor inlet is greater than the saturation temperature, therefore, "drywall" desuperheating will take place initially. By trial and error, calculate the duty required when the assumed bulk vapor temperature results in a surface temperature less than the saturation temperature, thereby marking the transition from "drywall" to "wet wall" desuperheating. Assume the vapor bulk temperature is 133°F.

$$Q_v = 9{,}060{,}000 \text{ Btu/hr from Fig. 9-14.}$$

$$Q_1 = \frac{(180 - 133)}{(180 - 108)}(9{,}060{,}000)$$

$$= 5{,}910{,}000 \text{ Btu/hr} \qquad \text{(Heat removed from vapor between 180°F and 133°F)}$$

$$T_C = 94 - \left[\frac{5{,}910{,}000}{41{,}480{,}000}(94 - 82)\right] = 92.3°F$$

(T_C is the water temperature at $Q_v - Q_1$, see Fig. 9-14)

$$T_{wo} = 133 - \left[\frac{69.9}{111.1}(133 - 92.3)\right] = 107.4°F$$

Include the remainder of the desuperheating duty in the condensing zone. (Zone 2.)

ZONE 1

$$Q = Q_1 = 5{,}910{,}000 \text{ Btu/hr from above.}$$

$$\begin{array}{ccc} 180 & \rightarrow & 133.0 \\ \underline{94} & \leftarrow & \underline{92.3} \\ 86 & & 40.7 \end{array}$$

$$\text{LMTD} = \frac{86 - 40.7}{\ln(86/40.7)} = 60.6°F$$

$$A = \frac{5{,}910{,}000}{(69.9)\,(60.6)} = 1{,}395 \text{ ft}^2$$

ZONE 2

$$Q = Q_v - Q_1 + Q_c \qquad (Q_c \text{ from Fig. 9-14})$$

$$= 9{,}060{,}000 - 5{,}910{,}000 + 30{,}300{,}000$$

$$= 33{,}450{,}000 \text{ Btu/hr}$$

$$T_C = 94 - \frac{(5{,}910{,}000 + 33{,}450{,}000)}{41{,}480{,}000}(94 - 82) = 82.6°F$$

(NOTE: You do **not** use 133°F as the inlet temperature to this zone.)

$$\begin{array}{ccc} 108.0 & \rightarrow & 108.0 \\ \underline{92.3} & \leftarrow & \underline{82.6} \\ 15.7 & & 25.4 \end{array}$$

$$\text{LMTD} = \frac{25.4 - 15.7}{\ln(25.4/15.7)} = 20.2°F$$

$$A = \frac{33{,}450{,}000}{(140.0)\,(20.2)} = 11{,}830 \text{ ft}^2$$

ZONE 3

$$Q = Q_L = 2{,}120{,}000 \text{ Btu/hr from Fig. 9-14}$$

$$\begin{array}{ccc} 108.0 & \rightarrow & 95 \\ \underline{82.6} & \leftarrow & \underline{82} \\ 25.4 & & 13 \end{array}$$

$$\text{LMTD} = \frac{25.4 - 13}{\ln(25.4/13)} = 18.5°F$$

$$A = \frac{2{,}120{,}000}{(114.5)\,(18.5)} = 1000 \text{ ft}^2$$

Total Area

$$\Sigma A = 1{,}395 + 11{,}830 + 1{,}000 = 14{,}225 \text{ ft}^2$$

The condensing of a vapor mixture requires additional considerations to those outlined above for pure components. If the mixture condenses over a narrow temperature range, the pure component analysis is applicable. If, on the other hand, the mixture condenses over a wide temperature range, the problem is complicated by the relationship between heat and mass transfer rates. This is also true in the case of condensing vapors in the presence of noncondensables.

The calculation of the condensing coefficient involves physical and thermodynamic properties of the condensing fluid, the two-phase flow regime involved, and the heat exchanger type, geometry, and orientation. The detailed design of such a condenser should be left to a specialist.

REBOILERS AND VAPORIZERS

The "Pool Boiling Curve"

Boiling, as applied to reboilers and vaporizers, can be a complicated relationship of heat and mass transfer. The simplest form is pool boiling where hot fluid inside a tube causes vapor generation on the outside surface of the tube from a pool of liquid. The heat exchange capability of a fluid in pool boiling is determined by empirically correlated data and represented as a "Pool Boiling Curve" that is specific for a composition and a pressure. Fig. 9-15 is a typical representation of single tube data. The shape and regions of the curve in Fig. 9-15 are characteristic of pure component fluids and most mixtures dominated by a single component. Mixtures that boil over a wide temperature range or are being vaporized near their critical point may not fit the characteristic shape or regions. With appropriate curve data and heating medium temperature level, a well designed 'pool' reboiler will have heat fluxes in the region analogous to the B-C-D region of Fig. 9-15. Exchangers designed in the E-F-G regions (high surface temperature) may foul faster from thermally activated chemical reactions than would a wet wall design. In the flux inversion region (D-E)

FIG. 9-15

A Typical Pool Boiling Curve

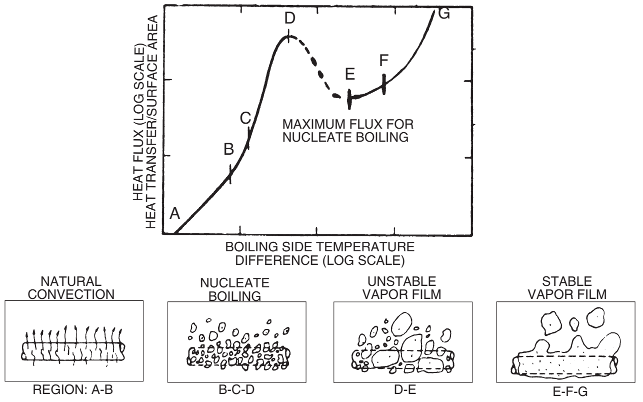

Courtesy of HTRI

erratic, if not reversed, control behavior will occur. Fig. 9-16 summarizes some typical heat flux ranges for some common fluids.

Effective Temperature Difference

Boiling, like condensing, may not occur at a constant heat transfer coefficient. The basic definition of Log Mean Temperature Difference may not apply. The effective temperature difference, often called the True Mean Temperature Difference (TMTD), must be determined based on installation and fluid conditions at the reboiler. Elevation of a fluid's bubble point by static head being added to a column's sump pressure means a subcooled liquid must be heated to a bubble point higher than the bottom tray liquid temperature. With countercurrent or co-current flow arrangements, an incrementally evaluated Weighted Temperature Difference (WTD) is appropriate. However, in crossflow and pool boiling, a different analysis must apply. In pool boiling, a temperature rise is not readily predictable along a particular geometric flowpath. For design purposes, the TMTD is often taken as if the pool were isothermal at the vapor outlet temperature.

FIG. 9-16

Typical Overall Boiling Heat Flux Ranges

Heat Medium	Boiling Fluid	Heat Flux Range, Btu/(hr • sq ft)
Hot Oil	C_1-C_2 HC	7,000 - 8,000
	C_3-C_5 HC	6,500 - 14,000
	Rich Oil	2,500 - 3,500
	Amines	3,500 - 5,500
HC Gas	C_1-C_2 HC	2,000 - 4,500
Steam	C_1-C_2 HC	8,000 - 13,000
	C_3-C_5 HC	10,000 - 15,000
	Rich Oil	4,000 - 6,000
	Amines	4,500 - 6,500

Hydraulic Effects

When the geometric flowpath of a boiling fluid is well defined (all boiling except pool boiling), the effects of liquid and vapor velocities are part of a design or operating analysis. Liquid and vapor co-exist in 'regimes' as illustrated in Fig. 9-17. Typically, these regimes progress to termination between Slug Flow and Mist-Annular Flow in a reboiler. In these regimes the heat transfer coefficient has two important contributing parts, convective boiling and nucleate boiling. When liquid is recirculated to a reboiler, the heat transfer coefficient is maximized and such limiting conditions as Mist Flow, Vapor Film Boiling, and two-phase momentum transfer instability may be avoided. The latter form of instability occurs when liquid feed to a reboiler has pulsations (intermittent liquid flow reversal) generated by an instantaneous vapor acceleration pressure drop that temporarily causes the total pressure drop to exceed available static head. The heat medium temperature affects the same limiting conditions and may be the controlling variable when recirculation is not possible. Design and operating analysis requires a study of hydraulics, heat medium temperature, and exchanger geometry for a particular fluid to define valid limitations on a reboiler. Analytical methods are available in the technical literature noted in the bibliography.

Types of Reboilers

Kettle — Kettle reboilers are commonly applied when a wide range of process operations (high turndown capability), large heat exchange surface, or high vapor quality is required. Installations include column bottom reboilers, side reboilers,

FIG. 9-17

Two-Phase Flow Regimes in Vertical Tubes

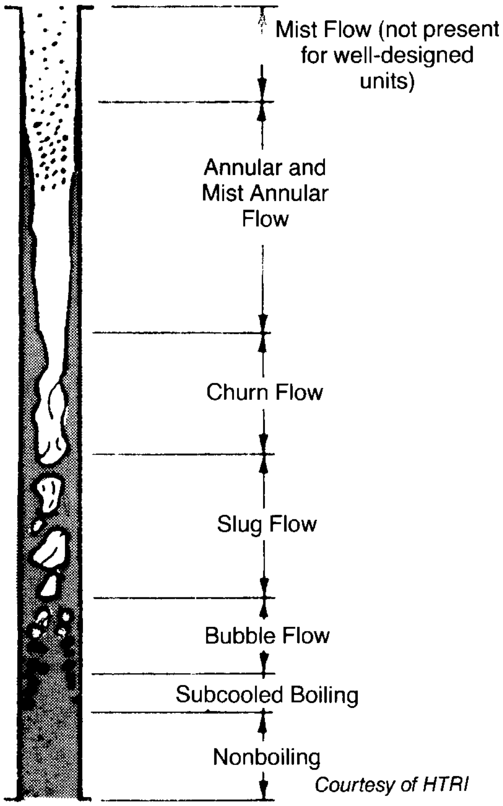

Courtesy of HTRI

or vaporizers. Fig. 9-18 shows a typical kettle. Kettles are generally more costly than other reboiler types due to shell size, surge volume size, and uncertainty in the TMTD. Without TMTD or fouling problems, a column-internal (stab-in) reboiler would be suitable if the required surface is relatively small.

FIG. 9-18

Kettle Reboiler on Column Bottoms

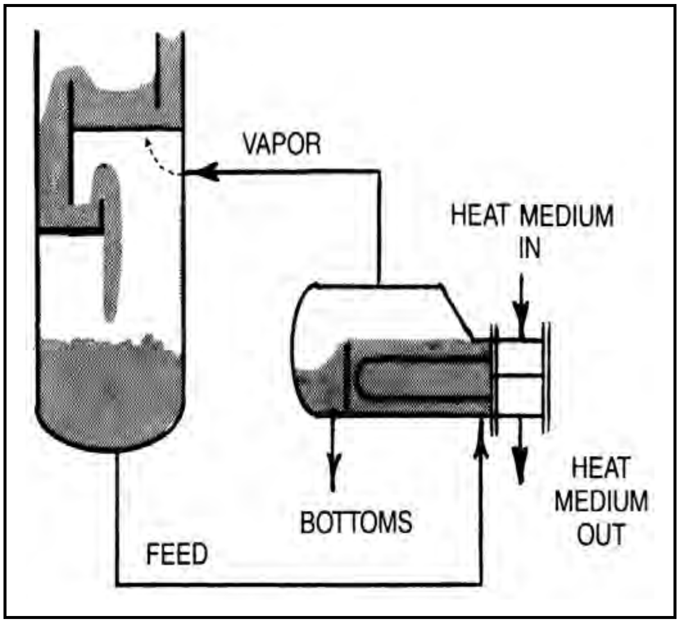

Recirculating thermosyphon — Recirculating thermosyphon reboilers are applicable when process operations are consistently near design rates. Typically, these are vertical tube side boiling, like Fig. 9-19, or for large surface requirements, horizontal shell side boiling. Installation requires a fixed static head, such as a partitioned column sump or a head drum, for recirculation. Recirculating thermosyphon reboilers are generally the least costly of reboiler types (other than column-internal type) due to maximized heat transfer, accurate TMTD, and relatively low fouling tendencies (due to higher velocities).

"Once-through" — Once-through reboilers are applicable when the feed is available without the capability for recirculation. These boilers may be called "thermosyphons" when taking a column tray liquid as feed such as shown in Fig. 9-20. Once-through reboilers and vaporizers have the lowest fluid residence time on the hot surface and have a fixed downstream pressure which fixes the inlet pressure to the reboiler (externally fixed head is not required). However, they have the narrowest range of stable hydraulics and heat medium temperatures in the wet wall regions of boiling due to the fixed flowrate. Substantial process judgment and analytical support are required for satisfactory performance. Once-through reboilers can be in either the horizontal or vertical position and have been designed for either shellside or tubeside boiling.

"Pump-through" — Pump-through or pump-around reboilers are applicable when handling viscous liquid or particulate-laden liquid, and when liquid heating by pressure suppressed vaporization are desirable. Any arrangement of shell side or tube side boiling, vertical or horizontal may be used, but Fig. 9-21 is a typical arrangement. Pump-through reboilers may or may not include recirculated liquid, but usually do. Suppressed vaporization operation requires a throttling valve in the outlet line of the reboiler to generate vapor at the downstream fixed pressure.

Type Selection — Reboiler type selection generally follows the guidelines of Fig. 9-22.

FIG. 9-19

Recirculating Thermosyphon Reboiler on Column Bottoms

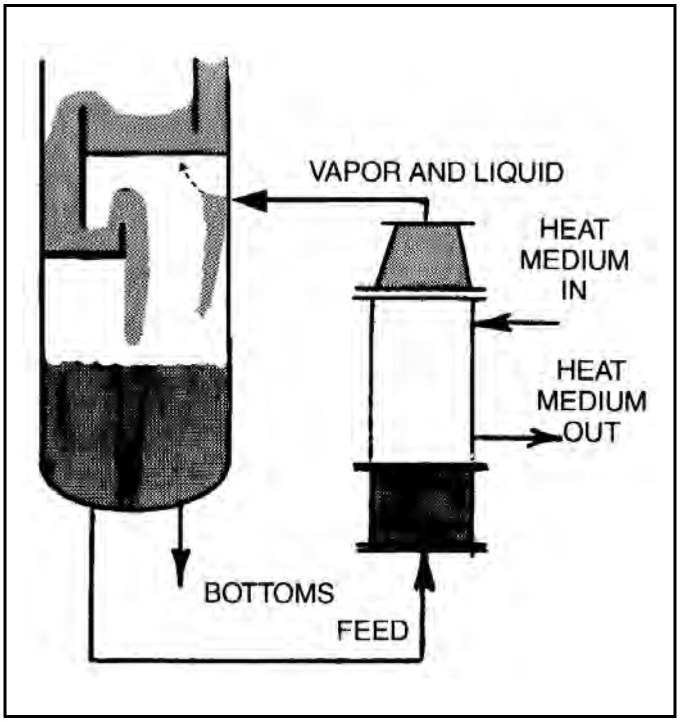

FIG. 9-20

Once-Through Reboiler with Bottom Tray Feed

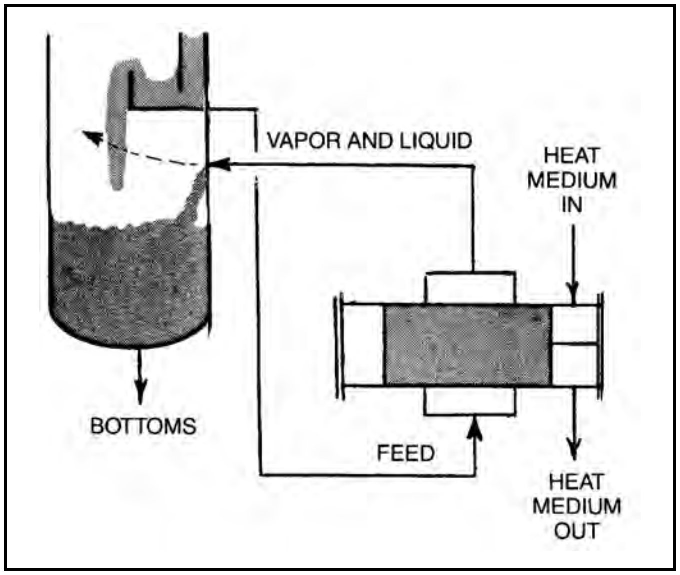

FIG. 9-21

Pump Through Reboiler on Column Bottoms

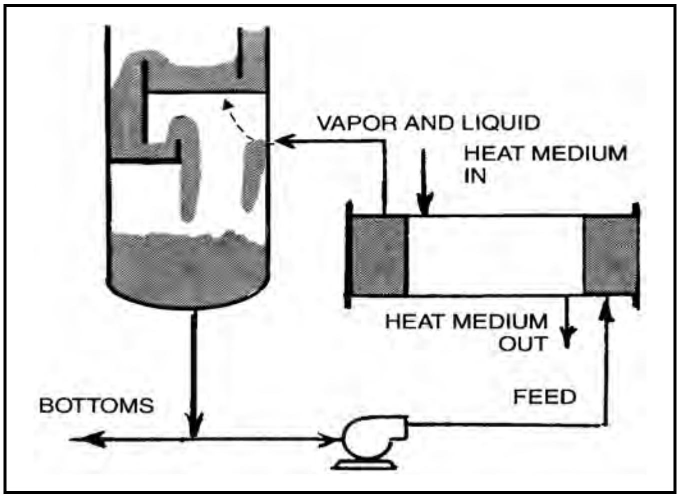

SELECTION OF EXCHANGER COMPONENTS

Industry Standards

Shell and tube heat exchanger technology for gas, chemical, and petroleum processing plants has developed a broad basis of common understanding through the "Standards of Tubular Exchangers Manufacturers Association" (TEMA). These "TEMA Standards" provide nomenclature, dimensional tolerances, manufacturer's and purchaser's responsibilities, general installation and operating guidelines, and specific design and fabrication practices.

The design and fabrication practices of TEMA are in three classifications, called Class "R," "C," or "B." Class "R" is applied to services with severe operating and maintenance characteristics. Class "C" is for the least severe characteristics. Class "B" is for chemical process applications between Classes "R" and "C." All classes are intended to be limited to ASME Code, Section VIII, Div. 1, cylinder wall thicknesses of less than about 2", and stud diameters of less than about 3"; though thicker components can be applied by the design practices specified.

TEMA Standards provide a "Recommended Good Practice" for the designer's consideration in areas outside of the limits of the specified standards. Guidance and references are noted for seismic design, large diameter exchangers, tube vibration, tube-to-tubesheet stress analysis, nozzle loading analysis, and numerous other design-limiting features.

Detailed understanding of shell and tube exchangers for use in the process industry requires an understanding of the TEMA Standards. Other industry standards as may be offered by ASME, API, or ANSI can be applied in a particular situation with or without TEMA Standards. The purchase order and specification sheet for a particular service will normally identify the applicable industry standards.

Nomenclature

Fig. 9-23 summarizes the major shell-and-tube exchanger components other than tubes and baffles. The letters are used for a standard nomenclature in the industry. A three-letter type designation in the order of front head type, shell type, and rear head type is used. For example, an AJS would have a front head that is removable with a removable cover, a shell that is

FIG. 9-22

Reboiler Selection Chart

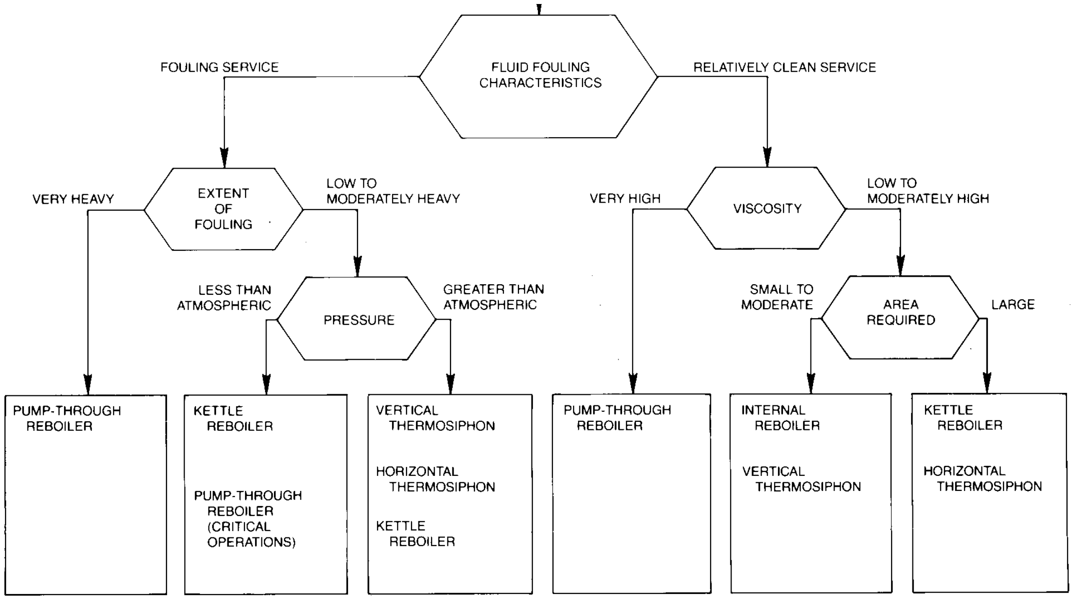

Courtesy HTRI

FIG. 9-23

Shell and Tube Exchanger Nomenclature

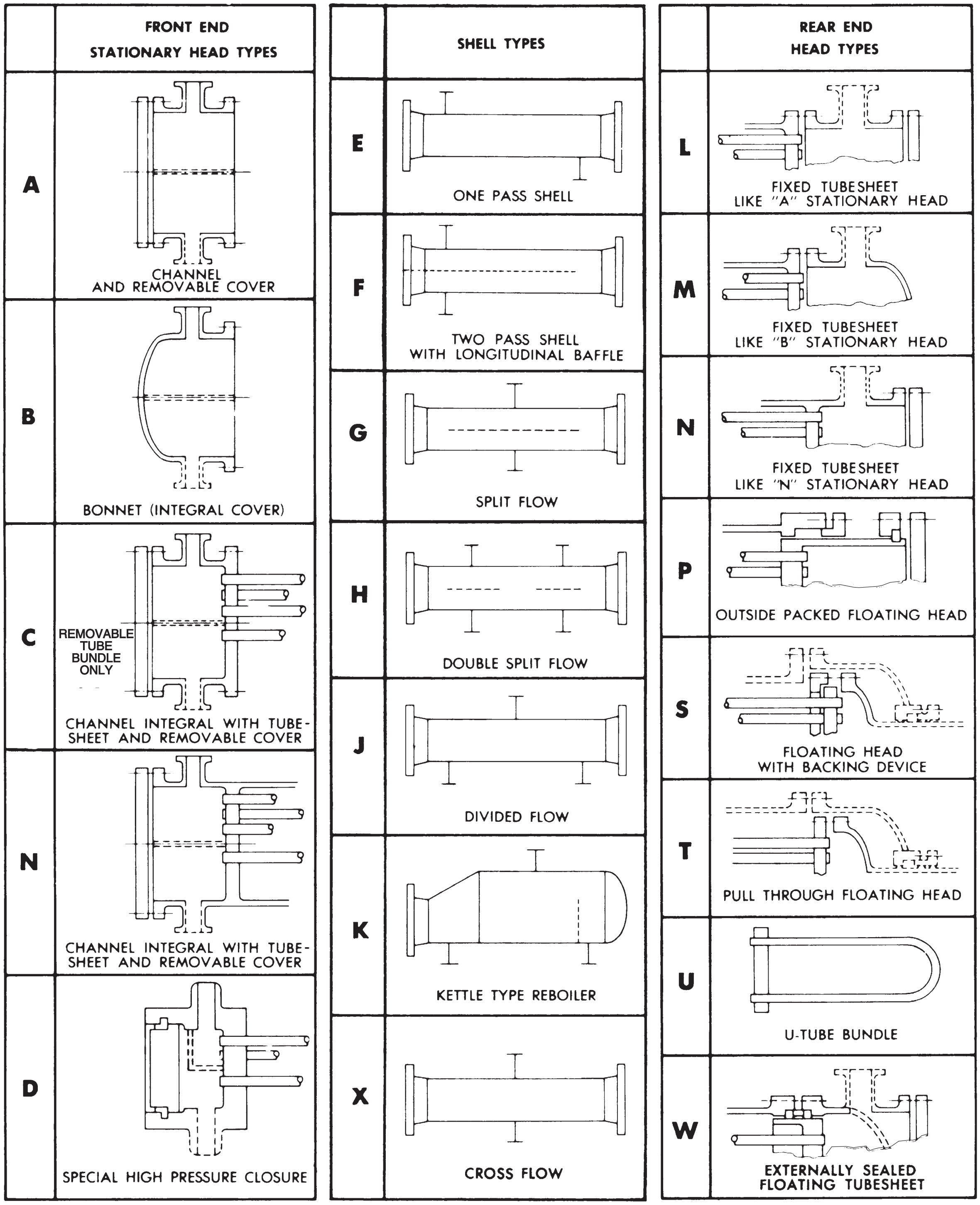

Courtesy of TEMA

arranged for divided flow, and a rear floating head with a backing device (usually a split-ring). Factors to consider in selecting a shell and tube exchanger type are summarized in Fig. 9-24.

Tube Wall Determination

The required tube wall thickness is determined from the ASME Code, Section VIII, Division 1 for cylinders under internal or external pressure. If U-tubes are used, the thinning of the tube wall in the bends must be considered. A minimum wall tube whose thickness is equal to or greater than the calculated thickness may be used, or an average wall tube whose minimum thickness is equal to or greater than the calculated thickness may be used. It is satisfactory to use an average wall tube that is one BWG heavier than the required minimum wall thickness; however, it is not always possible to substitute a minimum wall tube that is one BWG thinner than a specified average wall thickness tube. If the calculated wall thickness is less than the value recommended by TEMA, the TEMA values are used. Fig. 9-25 summarizes standard tube data.

Shell Size and Tube Count Estimation

The tube count in a given shell diameter varies with the tube diameter, tube spacing and layout (pitch), type of tube bundle, number of tube passes, and the shell side entrance and exit area allowed. After selecting an appropriate tube outside diameter and tube length, the number of tubes required to result in a given heat transfer surface can be calculated using the external square foot/foot data from Fig. 9-25.

Fig. 9-26 is a plot of tube count vs. diameter for four different triangular tube pitches most commonly used in shell and tube exchangers. Entering these curves with the required tube count will give a diameter which can be corrected for the various factors noted to determine the actual shell diameter required.

To correct for square pitch, multiply the shell inside diameter from Fig. 9-26 by 1.075. No correction factor is needed for any other pitch. To allow for entrance or exit areas, multiply shell inside diameter from Fig. 9-26 by 1.02 for each inlet or outlet area to be used. Fig. 9-27 is a table of factors to correct inside shell diameter for pass arrangement.

Fig. 9-28 is a table of adders to correct for type of construction.

Example 9-3 — Determine the shell diameter for 320 tubes, 1" OD spaced on a 1-1/4" square pitch layout, four-pass tubes, in a split ring type floating head shell and tube exchanger, with inlet flow area allowed.

Solution Steps

1. From the top curve of Fig. 9-26 read 25" corresponding to 320 tubes for the given tube spacing and pitch.
2. Correct for square pitch by multiplying by 1.075.
3. Using Fig. 9-27 correct for four pass by multiplying by 1.05.
4. Correct for inlet flow area by multiplying by 1.02.
   Accumulative multiplier is 1.075 x 1.05 x 1.02 = 1.15.
   Partially corrected diameter = 25" x 1.15 = 28.75".
5. From Fig. 9-28, correct for split ring floating head by adding 1" + 28.75 = 29.75".

So use a 30" ID shell for this tube count and configuration.

Enhanced Surface Tubing

Heat exchanger applications in which one of the fluids has a high heat transfer coefficient relative to the other fluid can benefit (either from lower first cost of a new exchanger or increased capacity in an existing unit) by use of specially enhanced tube surfaces on the side with the low coefficient. One commonly used tube is a "low finned" tube which has extruded fins on the outside of the tube and the diameter outside the fins is no greater than the outside diameter of the plain ends

FIG. 9-24

Shell and Tube Exchanger Selection Guide (Cost Increases from Left to Right)

Type of Design	"U" Tube	Fixed Tubesheet	Floating Head Outside Packed	Floating Head Split Backing Ring	Floating Head Pull-Through Bundle
Provision for differential expansion	individual tubes free to expand	expansion joint in shell	floating head	floating head	floating head
Removeable bundle	yes	no	yes	yes	yes
Replacement bundle possible	yes	not practical	yes	yes	yes
Individual tubes replaceable	only those in outside row	yes	yes	yes	yes
Tube interiors cleanable	difficult to do mechanically, can do chemically	yes, mechanically or chemically	yes, mechanically or chemically	yes, mechanically or chemically	yes, mechanically or chemically
Tube exteriors with triangular pitch cleanable	chemically only	chemically only	chemically only	chemically only	chemically only
Tube exteriors with square pitch cleanable	yes, mechanically or chemically	chemically only	yes, mechanically or chemically	yes, mechanically or chemically	yes, mechanically or chemically
Number of tube passes	any practical even number possible	normally no limitations	normally no limitations	normally no limitations	normally no limitations
Internal gaskets eliminated	yes	yes	yes	no	no

FIG. 9-25

Characteristics of Tubing

Tube O.D. Inches	B.W.G. Gauge	Thickness Inches	Internal Area Sq. Inch	Sq Ft External Surface Per Foot Length	Sq Ft Internal Surface Per Foot Length	Weight Per Foot Length Steel Lbs*	Tube I.D. Inches	Moment of Inertia (Inches^4)	Section Modulus (Inches^3)	Radius of Gyration (Inches)	Constant C**	O.D./I.D.	Transverse Metal Area Sq. Inch
¼	22	0.028	0.0296	0.0654	0.0508	0.066	0.194	0.00012	0.00098	0.0791	46	1.289	0.0195
¼	24	0.022	0.0333	0.0654	0.0539	0.054	0.206	0.00010	0.00083	0.0810	52	1.214	0.0158
¼	26	0.018	0.0360	0.0654	0.0560	0.045	0.214	0.00009	0.00071	0.0823	56	1.168	0.0131
¼	27	0.016	0.0373	0.0654	0.0571	0.040	0.218	0.00008	0.00065	0.0829	58	1.147	0.0118
⅜	18	0.049	0.0603	0.0982	0.0725	0.171	0.277	0.00068	0.0036	0.1166	94	1.354	0.0502
⅜	20	0.035	0.0731	0.0982	0.0798	0.127	0.305	0.00055	0.0029	0.1208	114	1.230	0.0374
⅜	22	0.028	0.0799	0.0982	0.0835	0.104	0.319	0.00046	0.0025	0.1231	125	1.176	0.0305
⅜	24	0.022	0.0860	0.0982	0.0867	0.083	0.331	0.00038	0.0020	0.1250	134	1.133	0.0244
½	16	0.065	0.1075	0.1309	0.0969	0.302	0.370	0.0021	0.0086	0.1555	168	1.351	0.0888
½	18	0.049	0.1269	0.1309	0.1052	0.236	0.402	0.0018	0.0071	0.1604	198	1.244	0.0694
½	20	0.035	0.1452	0.1309	0.1126	0.174	0.430	0.0014	0.0056	0.1649	227	1.163	0.0511
½	22	0.028	0.1548	0.1309	0.1162	0.141	0.444	0.0012	0.0046	0.1672	241	1.126	0.0415
⅝	12	0.109	0.1301	0.1636	0.1066	0.601	0.407	0.0061	0.0197	0.1865	203	1.536	0.177
⅝	13	0.095	0.1486	0.1636	0.1139	0.538	0.435	0.0057	0.0183	0.1904	232	1.437	0.158
⅝	14	0.083	0.1655	0.1636	0.1202	0.481	0.459	0.0053	0.0170	0.1939	258	1.362	0.141
⅝	15	0.072	0.1817	0.1636	0.1259	0.426	0.481	0.0049	0.0156	0.1972	283	1.299	0.125
⅝	16	0.065	0.1924	0.1636	0.1296	0.389	0.495	0.0045	0.0145	0.1993	300	1.263	0.114
⅝	17	0.058	0.2035	0.1636	0.1333	0.352	0.509	0.0042	0.0134	0.2015	317	1.228	0.103
⅝	18	0.049	0.2181	0.1636	0.1380	0.302	0.527	0.0037	0.0119	0.2044	340	1.186	0.089
⅝	19	0.042	0.2299	0.1636	0.1416	0.262	0.541	0.0033	0.0105	0.2067	359	1.155	0.077
⅝	20	0.035	0.2419	0.1636	0.1453	0.221	0.555	0.0028	0.0091	0.2090	377	1.126	0.065
¾	10	0.134	0.1825	0.1963	0.1262	0.833	0.482	0.0129	0.0344	0.2229	285	1.556	0.259
¾	11	0.120	0.2043	0.1963	0.1335	0.809	0.510	0.0122	0.0326	0.2267	319	1.471	0.238
¾	12	0.109	0.2223	0.1963	0.1393	0.747	0.532	0.0116	0.0309	0.2299	347	1.410	0.219
¾	13	0.095	0.2463	0.1963	0.1466	0.665	0.560	0.0107	0.0285	0.2340	384	1.339	0.195
¾	14	0.083	0.2679	0.1963	0.1529	0.592	0.584	0.0098	0.0262	0.2376	418	1.284	0.174
¾	15	0.072	0.2884	0.1963	0.1587	0.522	0.606	0.0089	0.0238	0.2411	450	1.238	0.153
¾	16	0.065	0.3019	0.1963	0.1623	0.476	0.620	0.0083	0.0221	0.2433	471	1.210	0.140
¾	17	0.058	0.3157	0.1963	0.1660	0.429	0.634	0.0076	0.0203	0.2455	492	1.183	0.126
¾	18	0.049	0.3339	0.1963	0.1707	0.367	0.652	0.0067	0.0178	0.2484	521	1.150	0.108
¾	20	0.035	0.3632	0.1963	0.1780	0.268	0.680	0.0050	0.0134	0.2531	567	1.103	0.079
⅞	10	0.134	0.2894	0.2291	0.1589	1.062	0.607	0.0221	0.0505	0.2662	451	1.442	0.312
⅞	11	0.120	0.3167	0.2291	0.1662	0.969	0.635	0.0208	0.0475	0.2703	494	1.378	0.285
⅞	12	0.109	0.3390	0.2291	0.1720	0.893	0.657	0.0196	0.0449	02736	529	1.332	0.262
⅞	13	0.095	0.3685	0.2291	0.1793	0.792	0.685	0.0180	0.0411	0.2778	575	1.277	0.233
⅞	14	0.083	0.3948	0.2291	0.1856	0.703	0.709	0.0164	0.0374	0.2815	616	1.234	0.207
⅞	15	0.072	0.4197	0.2291	0.1914	0.618	0.731	0.0148	0.0337	0.2850	655	1.197	0.182
⅞	16	0.065	0.4359	0.2291	0.1950	0.563	0.745	0.0137	0.0312	0.2873	680	1.174	0.165
⅞	17	0.058	0.4525	0.2291	0.1987	0.507	0.759	0.0125	0.0285	0.2896	706	1.153	0.149
⅞	18	0.049	0.4742	0.2291	0.2034	0.433	0.777	0.0109	0.0249	0.2925	740	1.126	0.127
⅞	20	0.035	0.5090	0.2291	0.2107	0.314	0.805	0.0082	0.0187	0.2972	794	1.087	0.092
1	8	0.165	0.3526	0.2618	0.1754	1.473	0.670	0.0392	0.0784	0.3009	550	1.493	0.433
1	10	0.134	0.4208	0.2618	0.1916	1.241	0.732	0.0350	0.0700	0.3098	656	1.366	0.365
1	11	0.120	0.4536	0.2618	0.1990	1.129	0.760	0.0327	0.0654	0.3140	708	1.316	0.332
1	12	0.109	0.4803	0.2618	0.2047	1.038	0.782	0.0307	0.0615	0.3174	749	1.279	0.305
1	13	0.095	0.5153	0.2618	0.2121	0.919	0.810	0.0280	0.0559	0.3217	804	1.235	0.270
1	14	0.083	0.5463	0.2618	0.2183	0.814	0.834	0.0253	0.0507	0.3255	852	1.199	0.239
1	15	0.072	0.5755	0.2618	0.2241	0.714	0.856	0.0227	0.0455	0.3291	898	1.168	0.210
1	16	0.065	0.5945	0.2618	0.2278	0.650	0.870	0.0210	0.0419	0.3314	927	1.149	0.191
1	18	0.049	0.6390	0.2618	0.2361	0.498	0.902	0.0166	0.0332	0.3367	997	1.109	0.146
1	20	0.035	0.6793	0.2618	0.2435	0.361	0.930	0.0124	0.0247	0.3414	1060	1.075	0.106
1¼	7	0.180	0.6221	0.3272	0.2330	2.059	0.890	0.0890	0.1425	0.3836	970	1.404	0.605
1¼	8	0.165	0.6648	0.3272	0.2409	1.914	0.920	0.0847	0.1355	0.3880	1037	1.359	0.565
1¼	10	0.134	0.7574	0.3272	0.2571	1.599	0.982	0.0742	0.1187	0.3974	1182	1.273	0.470
1¼	11	0.120	0.8012	0.3272	0.2644	1.450	1.010	0.0688	0.1100	0.4018	1250	1.238	0.426
1¼	12	0.109	0.8365	0.3272	0.2702	1.330	1.032	0.0642	0.1027	0.4052	1305	1.211	0.391
1¼	13	0.095	0.8825	0.3272	0.2775	1.173	1.060	0.0579	0.0926	0.4097	1377	1.179	0.345
1¼	14	0.083	0.9229	0.3272	0.2838	1.036	1.084	0.0521	0.0833	0.4136	1440	1.153	0.304
1¼	16	0.065	0.9852	0.3272	0.2932	0.824	1.120	0.0426	0.0682	0.4196	1537	1.116	0.242
1¼	18	0.049	1.0423	0.3272	0.3016	0.629	1.152	0.0334	0.0534	0.4250	1626	1.085	0.185
1¼	20	0.035	1.0936	0.3272	0.3089	0.455	1.180	0.0247	0.0395	0.4297	1706	1.059	0.134
1½	10	0.134	1.1921	0.3927	0.3225	1.957	1.232	0.1354	0.1806	0.4853	1860	1.218	0.575
1½	12	0.109	1.2908	0.3927	0.3356	1.621	1.282	0.1159	0.1545	0.4933	2014	1.170	0.476
1½	14	0.083	1.3977	0.3927	0.3492	1.257	1.334	0.0931	0.1241	0.5018	2180	1.124	0.369
1½	16	0.065	1.4741	0.3927	0.3587	0.997	1.370	0.0756	0.1008	0.5079	2300	1.095	0.293
2	11	0.120	2.4328	0.5236	0.4608	2.412	1.760	0.3144	0.3144	0.6660	3795	1.136	0.709
2	12	0.109	2.4941	0.5236	0.4665	2.204	1.782	0.2904	0.2904	0.6697	3891	1.122	0.648
2	13	0.095	2.5730	0.5236	0.4739	1.935	1.810	0.2586	0.2586	0.6744	4014	1.105	0.569
2	14	0.083	2.6417	0.5236	0.4801	1.701	1.834	0.2300	0.2300	0.6784	4121	1.091	0.500

* Weights are based on low carbon steel with a density of 0.2833 lbs/cu in. For other metals multiply by the following factors:

Aluminum	0.35	Aluminum Bronze	1.04	Nickel	1.13
Titanium	0.58	Aluminum Brass	1.06	Nickel-Copper	1.12
A.I.S.I. 400 Series Stainless Steels	0.99	Nickel-Chrome-Iron	1.07	Copper and Cupro-Nickels	1.14
A.I.S.I. 300 Series Stainless Steels	1.02	Admiralty	1.09		

** Liquid Velocity $= \frac{\text{Lbs Per (Tube} \bullet \text{Hour)}}{\text{(C) (Sp Gr of Liquid)}}$ in feet per sec (Sp Gr of Water at 60°F = 1.0)

Courtesy of TEMA

FIG. 9-26

Tube Count vs. Diameter for Triangular Tube Pitch

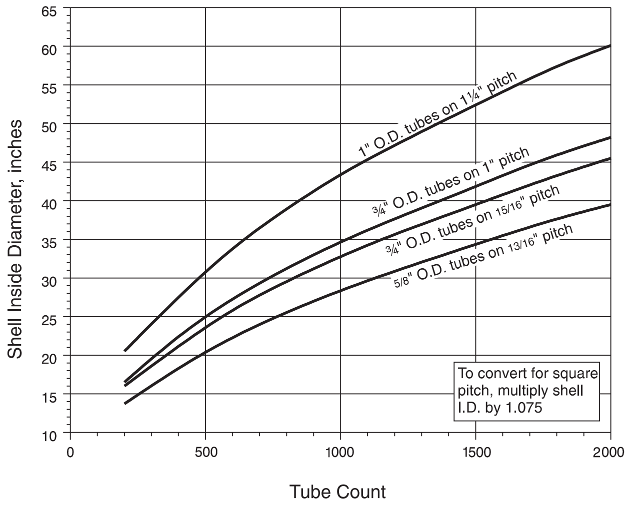

FIG. 9-27

Correction Factors for Number of Tube Passes

Shell Diameter, inches	Number of Tube Passes			
	Two	Four	Six	Eight
less than 12"	1.10	1.20	1.35	—
12" to 24"	1.03	1.08	1.12	1.25
25" to 41"	1.02	1.05	1.07	1.08
greater than 41"	1.01	1.03	1.04	1.06

FIG. 9-28

Adders to Shell Diameter

Shell Diameter, inches	Type of Construction		
	Fixed Tubesheet	Split Ring	Pull Through
less than 27"	None	5/8"	3-1/2"
27" to 41"	None	1"	4"
greater than 41"	None	1-5/8"	5"

so the exchanger can be assembled or retubed in the same way as a bare tube exchanger. The effect is to increase the heat transfer surface of the tube approximately 250% to result in a more compact exchanger for a given service compared to one using bare tubes. These tubes perform favorably in clean applications such as light hydrocarbon condensers where vapor velocity permits a condensate film to be distributed over more surface per tube. These tubes are available in metals commonly used in most heat exchangers.

High heat flux tubes with special coatings to create a porous surface are sometimes used where liquid velocities permit nucleate boiling to increase the heat flux per tube provided the porous surface remains exposed to the liquid.

For even more specialized considerations of fluid properties and operating requirements, a tube wall may be extruded at or near thickness to a variety of shapes. A convoluted spirally extruded tube wall offers a range for the hydraulic diameter that may be optimized for the fluids considered.

Other than low finned tubes, most enhanced surface tubes are limited to materials uniquely suited to the particular enhanced surfaces and special fabrication limitations. The limitations on application and availability as dictated in specific supplier's literature must be considered.

OPERATING CHARACTERISTICS

Inlet Gas Exchanger

The familiar feed-to-residue gas exchanger is characterized by a close temperature approach between the two streams over a long temperature range which requires countercurrent flow arrangement. For overall economy this service will have very long tubes and low pressure drops in an optimized design. Such design will include adequate protection from hydrate formation in the feed gas and a baffle arrangement suitable for low shellside pressure drop and no significant tube vibration.

In wet gas streams hydrate formation is normally prevented by spraying methanol or ethylene glycol on the face of the front tubesheet. Critical to the effectiveness of that injection is the spray coverage of the tube field and a tube side velocity sufficient to achieve annular (wet wall) flow in each tube as shown in Fig. 9-17.

To maintain countercurrent flow arrangement baffle variations may be considered to minimize shell side pressure drop. A variety of multisegmented baffles offer lower pressure drop per cross pass than the segmental type. Proprietary low pressure drop devices such as wire (or rod) web baffles may be appropriate if the loss in heat transfer is not significant. When tube vibration is a prime concern, a segmentally cut baffle arrangement with no tubes in the cut out window provides nonproprietary maximum tube support for a given pressure drop.

Tube Vibration

Tubes or tube bundles can be excited to sufficient movement to create noise, tube damage, and/or baffle damage. Some tube field geometries are particularly susceptible to acoustical resonance. Any tube has a natural frequency of vibration dependent on its supported span, size, and density. When velocity of a fluid induces cyclic forces approximating that natural frequency, vibration occurs. The first mode of vibration (lowest natural frequency) occurs at the half wave length equal to the supported span and is the usual case for analysis. However, higher modes of vibration are possible when multiple half wave lengths coincide with the supported span length. Since tube bundles have damping characteristics, damage may or may not occur at a particular mode of vibration. A substantial bibliography of analytical methods as well as calculation procedures for this subject are presented in the Recommended Good Practice section of TEMA standards.

Evaluating Altered Performance

Exchanger performance will deviate when:

1. Process conditions are altered by feedstock, throughput, control/instrumentation, or mechanical failure of adjoining equipment.
2. Corrosion or foulant material achieves a limiting condition.
3. Internal leakage or mechanical failure has occurred in the exchanger.

Operating records and overall process analysis can address most problems except fouling, corrosion, internal leakage, and mechanical failure within the exchanger.

If a relief valve is overpressured on the low pressure side of an exchanger, it suggests interstream leakage or a near total flow restriction on the low pressure side. Substantial loss of pressure on the high pressure side confirms interstream leakage. The soundness of tubes, tubesheets, internally gasketed joints, and/or internal expansion joints must be tested and the failed components repaired, replaced, or plugged. A relief valve overpressuring on the high pressure side suggests a flow restriction downstream of the relief valve connection.

Flow restriction not accountable to operating changes in the process analysis is probably attributable to fouling debris somewhere in one or both stream systems. If such flow restriction occurs gradually (several days to several months), a systematic inspection with cleaning as needed is probably required. If such flow restriction occurs quickly (seconds to hours), mechanical failure or a process step-change probably occurred somewhere in the stream system. Only an available flow bypass around the exchanger can isolate and identify the flow restriction in the exchanger. A flow restriction anywhere in a stream system will alter an exchanger's heat transfer effect on both stream systems involved. The process analysis should indicate which stream has consequential limits and which stream is a problem source.

Perhaps the most difficult performance problem to isolate in operation is the discrimination between pass partition leakage and fouling, though fouling, being expected, is often presumed. Obviously in a new or clean exchanger, a bad gasket or fit-up might immediately come to mind; but when the unit is partially fouled, pressure drop data may or may not indicate which specific problem is occurring. Comparing pressure drop data to normal operation may be the best available indication while the unit is in service. In cases where continued operation would not have serious consequences in reaction products, product quality, corrosion, or economics due to unachieved heat transfer, this judgment may best be delayed until the unit is out-of-service. Though fouling may be observable, close examination of all pass plate edges, gaskets, flatness, and groove edges in tubesheets and channel covers should expose the problem.

Hairpin Heat Exchangers

Hairpin heat exchangers are designed in a hairpin shape and are fabricated in accordance with ASME code. The design consists of shell and tube closures proprietary for each vendor. Hairpins are divided into two major types: Double Pipe and Multi-tube.

The Double Pipe type, shown in Fig. 9-29, consists of a single tube or pipe, either finned or bare, inside a shell. The Multi-tube type, shown in Fig. 9-30, consists of several tubes, either finned or bare, inside a shell. The maximum pressure rating of hairpin exchangers depends on a number of key design considerations including nozzles, closures, and material of construction. Standard designs are available for pressures up to 5000 psig on tubeside and 500 psig on shellside, and special designs can be fabricated for higher pressures.

Hairpin sections are specially designed units which are normally not built to any industry standard other than ASME Code. However, TEMA tolerances are normally incorporated, wherever applicable.

Advantages

1. The use of longitudinal finned tubes will result in a compact heat exchanger for shellside fluids having a low heat transfer coefficient.
2. Countercurrent flow will result in lower surface area requirements for services having a temperature cross.
3. Potential need for expansion joint is eliminated due to U-tube construction.
4. Shortened delivery times can result from the use of stock components that can be assembled into standard sections.
5. Modular design allows for the addition of sections at a later time or the rearrangement of sections for new services.
6. Simple construction leads to ease of cleaning, inspection, and tube element replacement.

FIG. 9-29

Double Pipe Heat Exchanger

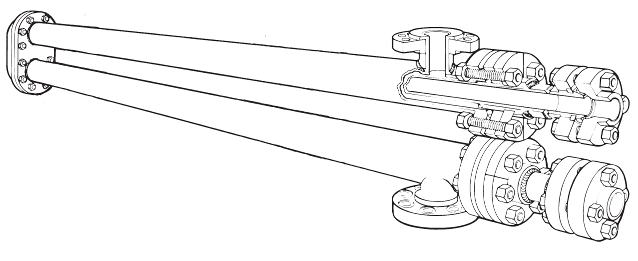

Courtesy of Brown Fintube Co.

Disadvantages

1. Multiple hairpin sections are not always economically competitive with a single shell and tube heat exchanger.
2. Proprietary closure design requires special gaskets.

Application Guidelines

The suitability of using hairpin exchanger in a given application is frequently evaluated by computing the UA product from the basic heat transfer equation (see Eq 9-5):

$$UA = \frac{Q}{LMTD}$$

FIG. 9-30

Multitube Heat Exchanger

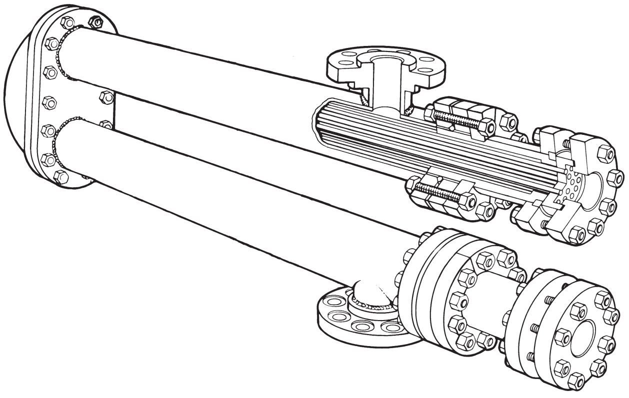

Courtesy of Brown Fintube Co.

For preliminary evaluation UA = 150,000 may be considered to be the upper economical limit for applying hairpin type units.

- UA = 150,000 Btu/(hr • °F)

  Above this value, the unit may be uneconomical for a hairpin type design. If a hairpin is applied, it may require multiple 16" multitube sections.

- UA = 100,000 to 150,000 Btu (hr • °F)

  In this range, one or more 12" to 16" multitube sections will normally be required.

- UA = 50,000 to 100,000 Btu/(hr • °F)

  In this range, one or more 4" to 12" multitube sections will normally be required.

- UA = 50,000 Btu/(hr • °F)

  Below this value, both double pipe and multitube sections should be evaluated.

Fig. 9-31 lists typical sizes for hairpin type exchangers.

Tank Heaters

Tank heaters are required to maintain or increase the temperature of a tank's contents. Tank heaters are relatively inefficient in heat transfer since the fluid inside the tank normally does not flow with appreciable velocity over the heat transfer surface and the low velocities produce a high tankside film resistance. Many different methods exist for heating tanks. Some of the more common ones are described below.

Wall Mounted Coils or Panels

Wall mounted coils are common on small insulated tanks when the contents must be maintained at a constant temperature, usually at or near the inlet temperature. Design variations include simply tracing the tank with small tubing suitable for heating with steam or other hot fluid, to tanks whose walls are actually constructed from prefabricated heat transfer panels.

Internal Prefabricated Tank Heaters

Internal heaters are available in a wide variety of configurations. Steam is commonly used as the heating medium, but many other hot fluids have been used in actual practice. Externally finned pipe is commonly used to improve heat transfer efficiency. For large tanks, multiple units similar to that shown in Fig. 9-32 are supported near the bottom of the tank. For small tanks, the same tubing in a vertical configuration can be provided.

Internal Pipe Coils

Internal pipe coils are normally fabricated from 2 inch schedule 40 pipe supported near the bottom of the tank. Serpentine shaped coils are most common although circular coils are also used.

Prefabricated Stab-in Tube Bundle

Prefabricated stab-in bundles are similar to a kettle tube bundle. Removable U-tube bundles are mounted through an appropriately sized opening near the tank bottom.

Tank Suction Heaters

A tank suction heater is shown in Fig. 9-33. This type of unit raises the temperature and thus reduces the viscosity of a pumped fluid without heating the tank fluid that remains in the tank.

FIG. 9-31

Typical Hairpin Exchanger Sizes

	Double Pipe	Multitube
Shell dia (in.)	2" - 6"	3" - 16"
Tube dia (in.)	¾" - 4"	¾" - 1"
No. of Longitudinal Fins	0 - 72	0 - 24
Fin Height (in.)	0 - ¾"	0 - ½"
Surface (sq ft/20 ft)	10 - 40	75 - 1500

FIG. 9-32

Prefabricated Tank Heater

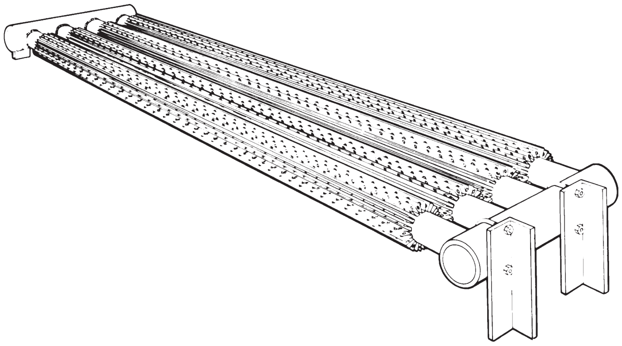

Courtesy of Brown Fintube Co.

FIG. 9-33

Tank Suction Heater

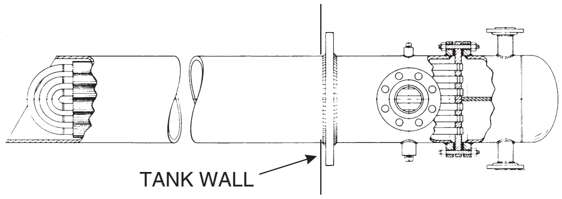

Courtesy of Brown Fintube Co.

Plate-Fin Exchangers

(Brazed Aluminum)

Brazed aluminum heat exchangers have been employed in cryogenic gas processing plants since the 1950s. This section briefly describes the basic configuration, advantages, hardware capabilities, rough section criteria, and user considerations for brazed aluminum heat exchangers used in gas processing applications.

BASIC CONFIGURATION

A brazed aluminum heat exchanger is composed of alternating layers of corrugated fins and flat separator sheets called parting sheets. A stack of fins and parting sheets comprise the heat exchanger, sometimes referred to as the "core." The heat exchanger is normally specified by its outside dimensions in the following order: Width (W) x Stack Height (H) x Length (L). The number of layers, type of fins, stacking arrangement, and stream circuiting will vary depending on the application requirements. The basic aluminum components of the heat exchanger are shown in Fig. 9-34 for a typical three stream counterflow exchanger.

Nozzles — Nozzles are the pipe sections used to connect the heat exchanger headers to the piping.

Headers — Headers are the half cylinders which provide for the distribution of fluid from the nozzle to or from the ports of each appropriate layer within the heat exchanger.

Ports — Ports are the opening in either the side bar or the end bar, located under the headers, through which the fluids enter or leave the individual layers.

Distributor Fins — Distributor fins distribute the fluid between the port and the heat transfer fins.

Heat Transfer Fins — The heat transfer fin provides extended heat transfer surface. All fins, both heat transfer and distributor, provide connecting structure between the parting sheets, which is necessary for the structural and pressure holding integrity of the heat exchanger. Typical heat transfer fin thicknesses range from 0.006 to 0.023 inches.

Parting Sheets — The parting (separator) sheets contain the fluids within the individual layers in the exchanger and also serve as primary heat transfer surface. Typical parting sheet thicknesses range from 0.032 to 0.080 inches.

Outside Sheets — Outside (cap) sheets serve as the outside parting sheets. They are typically 1/4-inch thick and serve as an outer protective surface of the exchanger.

Bars — The side and end bars enclose the individual layers and form the protective perimeter of the exchanger. Solid extruded bars from 1/2 to 1 inch wide are typically used.

Support Angles — Support angles are typically 90 degree extruded aluminum angles welded to the bar face of the exchanger for the purpose of supporting or securing the exchanger in its installed position. Other support configurations are available.

Battery — A multiple exchanger assembly, sometimes referred to as a "battery," consists of two or more exchangers piped or manifolded together into a single assembly, with the individual exchangers arranged either in a parallel, series, or combination parallel-series arrangement.

Cold Box — Individual exchangers and batteries are often installed in a "cold box." A cold box consists of a welded, airtight carbon steel casing, rectangular or cylindrical in shape, which supports and houses the heat exchangers, piping, other related cryogenic equipment, and insulation material.

ADVANTAGES AND LIMITATIONS

Aluminum maintains excellent strength and ductility to temperatures as low as –452°F. Aluminum actually increases in strength at cold temperatures. Because of its relatively low melting temperature, however, aluminum is less resistant to fires and high temperatures than are some other materials. Aluminum is generally not employed for process temperatures above 150°F, especially when higher pressures are involved. Aluminum exchangers are less resistant to rough handling and mistreatment than steel equipment and are limited to use with fluids non-corrosive to aluminum.

Brazed aluminum heat exchangers are compact and lightweight. A typical high pressure brazed aluminum heat exchanger (600-1,400 psig design pressure) will provide 300 to 400 square feet of heat transfer surface per cubic foot of exchanger volume. This is six to eight times the surface density of comparable shell and tube exchangers. Additionally, a typical high pressure brazed aluminum heat exchanger will have a density of 75 to 90 pounds per cubic foot of exchanger versus approximately 250 pounds per cubic foot for comparable shell and tube exchangers. The net effect of these differences is that a brazed aluminum heat exchanger will provide approximately 25 times more surface per pound of equipment than comparable shell and tube exchangers. This decrease in exchanger weight and volume reduces foundation, support, plot plan, and insulation requirements.

An important point to note when evaluating the size and efficiency of a brazed aluminum heat exchanger is that it is customary to include total surface in all streams, hot and cold. This is equivalent to counting both the inside and outside tube surfaces in a tubular heat exchanger. This method for specifying surface is used because brazed aluminum heat exchangers will often be designed with an unbalanced surface. More surface is provided on one stream of the heat exchanger than in the other stream(s) in order to balance the variation in heat transfer coefficients. Up to ten streams can be combined into a single brazed aluminum heat exchanger; combining counterflow, crossflow, and cross-counterflow circuiting. Temperature approaches of 3°F on single-phase fluids and 5°F on two-phase

FIG. 9-34

Basic Components of a Three Stream Counterflow Brazed Aluminum Heat Exchanger

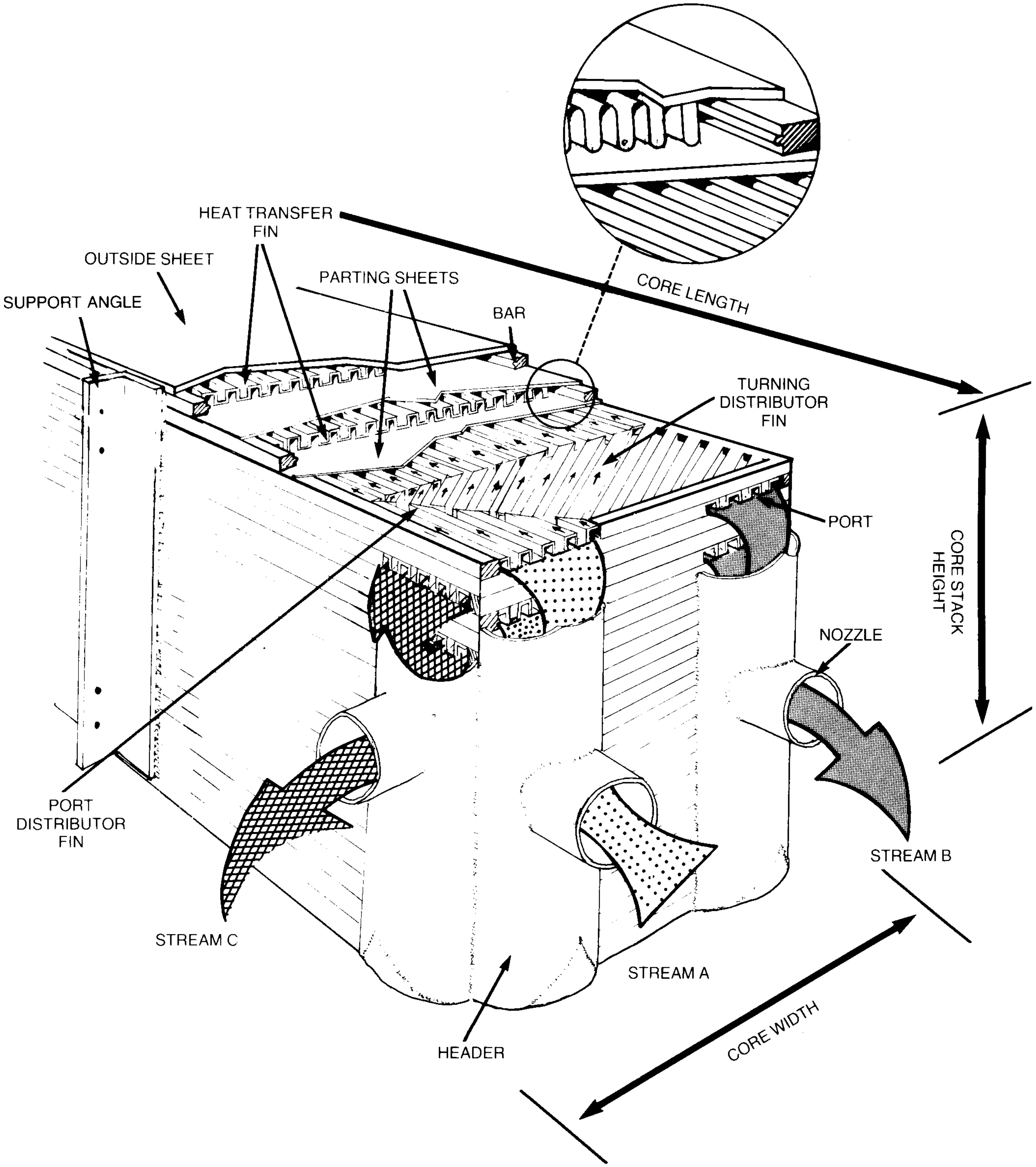

Courtesy ALTEC International, Inc.

fluids can be achieved. Typically, corrected mean temperature differences of 5°F to 10°F are employed in brazed aluminum heat exchanger applications.

Brazed aluminum heat exchangers should be used with clean fluids since they are more susceptible to plugging than other types of heat exchanger equipment; however, proper filters will prevent heat exchanger fouling. Brazed aluminum should not be used with fluids which are corrosive to aluminum. Mercury and caustic soda are extremely corrosive to aluminum and should not be introduced into the exchanger. Hydrogen sulfide and carbon dioxide are not a corrosion problem in streams with water dewpoint temperatures below the cold end temperature of the exchanger.

APPLICATIONS

Brazed aluminum heat exchangers are used in the following cryogenic natural gas processing applications.

Ethane Plus Recovery
Nitrogen Removal
Helium Recovery
Liquefied Natural Gas (LNG)

Within these applications, brazed aluminum heat exchangers are used for the following heat exchanger services:

Gas to Gas Exchangers
Demethanizer Reboilers
Demethanizer Reflux Condensers
Feed Gas Exchangers
Product Heaters
Propane Chillers

HARDWARE CAPABILITIES

Materials and Codes of Construction

Brazed aluminum heat exchangers are designed and constructed to comply with the "ASME Boiler and Pressure Vessel Code," Section VIII, Division I, or other applicable standards. The aluminum alloys used comply with ASME Section II, Part B, "Nonferrous Materials," or the requirements of the specified code authority.

Aluminum alloy 3003 is generally used for the parting sheets, corrugated fins, and bars which form the rectangular heat exchanger block. These parts are metallurgically bonded by a brazing process at temperatures of about 1100°F. The brazing alloy is an aluminum silicon metal and is provided on or with the parting sheets. Headers and nozzles are made from aluminum alloys 3003, 5054, 5083, 5086, 5454, or 6061-T6. Alloy 5083 is the most commonly used.

Maximum Working Temperature, Pressure, and Sizes

The maximum design temperature rating for brazed aluminum heat exchangers is typically 150°F; however, special designs are available for design temperatures up to 400°F. The minimum design temperature is –452°F.

ASME code approved brazed aluminum heat exchangers are available for pressure ratings from zero absolute to 1,400 psig. Different design pressures can be used for each stream in the exchanger. The maximum core size available will vary with the maximum design pressure as shown in Fig. 9-35. Some size variation from Fig. 9-35 will occur depending on a particular manufacturer's capabilities, specific design, and flow configuration. Batteries of exchangers are much larger and are limited in size by transportation capabilities.

Fins

Fins are available to cover a wide range of applications for a variety of heat transfer and pressure drop requirements at low, medium, and high pressure. The economic justification for using a particular fin type is unique for each application and is highly dependent on the cost of power relative to other considerations. Three major types of fins are shown in Fig. 9-36. These include plain (straight), serrated (lanced), and perforated. These and other more specialized fins can provide heat exchanger designs optimized for the best combination of heat transfer, pressure drop, compactness, and cost for a specific application.

Distributor and Passage Arrangements

There are a large number of distributor and passage arrangements available in brazed aluminum heat exchangers. Fin arrangements frequently used in gas processing applications are shown in Fig. 9-37 for a gas/gas exchanger. The "A" stream layers are shown with center distributors and provide for the residue gas to flow through the entire length of the heat exchanger. The "B & C" stream layers are arranged with side distributors and provide for each of the two high pressure feed gas streams to flow through only a portion of the overall heat exchanger length.

FIG. 9-35

Approximate Maximum Plate-Fin Exchanger Sizes & Pressures

Max. ASME Design Pres. (psig)	Maximum Size (Inches)			Nominal Total Heat Transfer Surface (Square Ft)	Nominal Total Net Weight*, (Pounds)
	Width	Stack Ht	Length		
400	48	48	240	120,000	16,000
600	42	42	240	84,000	17,000
800	36	38	240	56,000	16,000
1000	36	38	240	56,000	17,000
1200	36	38	240	56,000	17,000
1400	25	25	144	15,000	5,000

*Without Flanges

FIG. 9-36

Three Basic Fin Types

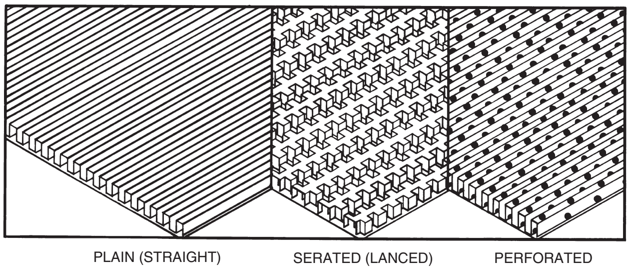

Courtesy ALTEC International, Inc.

FIG. 9-37

Typical Fin Arrangements for Gas/Gas Exchanger

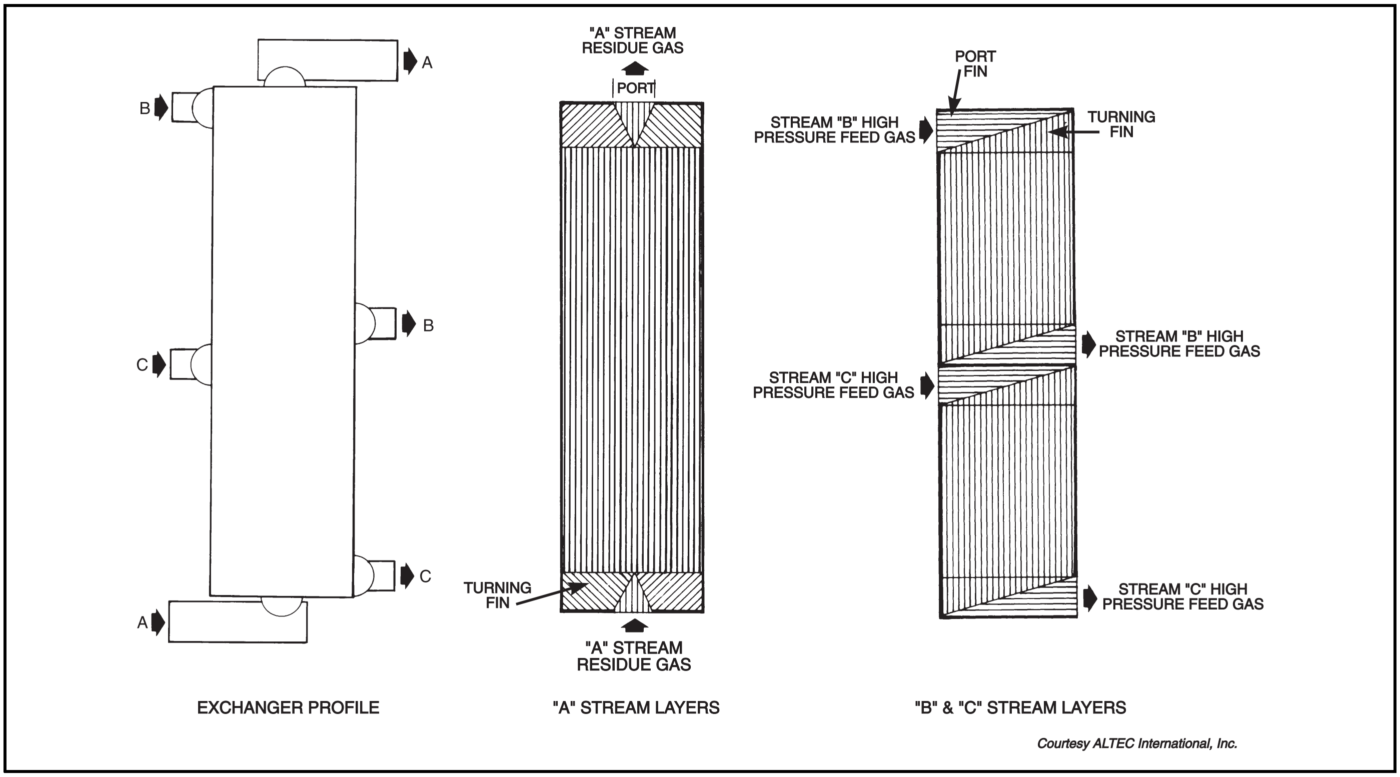

Courtesy ALTEC International, Inc.

SELECTIONS

Brazed Aluminum Heat Exchanger Specifications

The design and specification of a brazed aluminum heat exchanger require thermodynamic and mechanical information.

Thermodynamic — Heat transfer duty, operating pressure and temperature, allowable pressure drop, flow rates, compositions, and the physical, thermodynamic, and transport properties of the fluids involved must be specified. A cooling (or load) curve should be supplied to the designer/manufacturer for two-phase applications, and it may be necessary for single phase streams operating over a wide temperature range.

Mechanical — Specifications should include information on applicable code authorities, design pressure and temperature, and requirements for connection size, type, and orientation. Exchanger support and package requirements should also be defined.

Fig. 9-38 is a sample manufacturer's specification sheet. This document communicates the details of the heat exchanger design between the manufacturer and user. Lines 1-37 define the minimum information required from the user. Other required information includes turndown conditions, off-design conditions, and any other special operating conditions, if applicable. Using this information, the manufacturer will design the heat exchanger and provide the information in lines 38-61.

Heat Load Curves

Generation of the heat load curve, commonly called the cooling curve, from a temperature-duty table is an important first step in the analysis of any heat exchanger. It illustrates the intended heat exchange process and is used to define the required heat exchanger conductance (UA). A cooling curve also shows bubble and dewpoints, regions of phase change, and close temperature approaches.

Fig. 9-39 shows the temperature-duty data and cooling curve for a three-stream gas-to-gas heat exchanger. For multistream heat exchange services (more than two streams), the cooling curve can be reduced to a classic two-stream case for purposes of calculating and corrected mean temperature difference (CMTD) and the UA required. This is called the combined cooling curve assumption and is normally used for simple sizing calculations. Fig. 9-39 shows how a three-stream exchanger cooling curve is reduced to two streams by combining the cold residue gas stream duty with the cold recycle stream duty at points of constant temperature to form a combined cold stream.

The CMTD is approximated by calculating the log mean temperature difference (LMTD) on portions of the combined cooling curve called zones. The UA required in each zone is then calculated from the zone LMTD. At this point, it is possible to make individual heat exchanger sizings for each zone, or where more approximate sizings are acceptable, to make a heat exchanger sizing based on the combined zones using the CMTD. The CMTD is approximated by adding the UA's and Q's of each zone and dividing as shown in Fig. 9-39.

Selection of the precise number and location of zones is a matter of choice for the designer. However, proper selection of the number and location of zones will increase the accuracy of

FIG. 9-38

Brazed Aluminum Heat Exchanger Specifications

1						Specification No. Typical Rev Pg 1 Of 1			
2						Date			
3						Customer			
4						Project Job			
5						Location			
6	Plant Service GAS TO GAS EXCHANGER					Item No. E-1			
7	Stream	A) Feed Gas		B) Residue Gas		C) Recycle Gas			
8	Stream Components	Mole %		Mole %		Mole %		Mole %	
9	N2/CO2	4.0/0.6		4.5/0.4		4.0/0.4			
10	C1	83.8		93.7		92.5			
11	C2	6.3		1.3		2.1			
12	C3	3.1		0.1		1.0			
13	iC4/nC4	0.4/1.0		-		-			
14	iC5/nC5	0.2/0.6		-		-			
15	Total	100.0		100.0		100.0			
16	Total Flow lb/hr	40650		31320		14780			
17	Conditions At	Inlet	Outlet	Inlet	Outlet	Inlet	Outlet	Inlet	Outlet
18	Vapor Flow Rate lb/hr	40650	32195	31320	31320	14780	14780		
19	Molecular Weight	19.5	17.9	16.9	16.9	17.2	17.2		
20	Density lb/ft^3	2.79	4.84	1.02	0.56	1.32	0.80		
21	Viscosity lb/ft^3-hr	0.031	0.028	0.019	0.029	0.020	0.029		
22	Liquid Flow Rate lb/hr		8455						
23	Molecular Weight		30.1						
24	Density lb/ft^3		28.0						
25	Viscosity lb/ft^3-hr		0.15						
26	Temperature °F	120	-54	-106	113	-106	113		
27	Pressure PSIA	810		205		285			
28	Fluid Cond. or Vap. lb/hr	8455 (Cond.)							
29	Avg. Specific Heat (Vap/Liq) BTU/lb°F	0.638/0.578		0.520		0.532			
30	Avg. Thermal Cond. (Vap/Liq) *	0.0204/0.570		0.0167		0.0165			
31	Latent Duty BTU/hr								
32	Total Duty BTU/hr	5,500,000		3,700,000		1,800,000			
33	Corrected MTD °F	11.22							
34	Allowable Pressure Drop PSI	10.0		7.0		7.0			
35	Fouling Resistance hr-°F-ft^3-BTU	0.001		0.001		0.001			
36	Design Temp. (Max/Min) °F	-300/+150		-300/+150		-300/+150			
37	Design Pressure (Max) PSIG	1100		300		400			
38	Core Width (in) 25	No. Layers Core 63		Total No. Cores 1		In Parallel Series 1			
39	Core Stack Ht. (in) 23-1/4	? Sheet Thk (in) 0.080		No. Assemblies 1		Net Core (Ass'y) Wt. 5650			Lbs.
40	Core Length (in) 180	Outside Sheet Thk (in) 0.25		No. Cores per Ass'y 1		Shipping Core (Ass'y) Wt.. 6000			Lbs.
41	No. Layers per Core	21		30		12			
42	Fin Surface Type	Serrated		Serrated		Serrated			
43	Fin Height in	0.280		0.280		0.280			
44	Fin Thickness & Spacing in x FPI	0.016 x 17		0.016 x 17		0.016 x 17			
45	Effective Passage Width in	23-3/8		23-3/8		23-3/8			
46	Total Free Flow Area ft^2	0.65		0.93		0.37			
47	Effective Passage Length in	163-3/8		162-3/8		162-3/8			
48	Total Heat Transfer Surface ft^2	5910		8390		3360			
49	Frictional Pressure Drop PSI	8.8		6.9		6.4			
50	Header Size HPS	8	8	10	10	8	8		
51	Nozzle Size HPS	6	6	8	8	6	6		
52	Manifold Size HPS	-	-	-	-	-	-		
53	Type Connections	600 Lb.		300 Lb.		300 Lb.			
54	Test Pressure (Hydro Air Leak) PSIG	1650/1375		450/375		600/500			
55	Special Testing	None		None		None			

Courtesy ALTEC International, Inc.

FIG. 9-39

Heat Load Curve for a Three Stream Exchanger

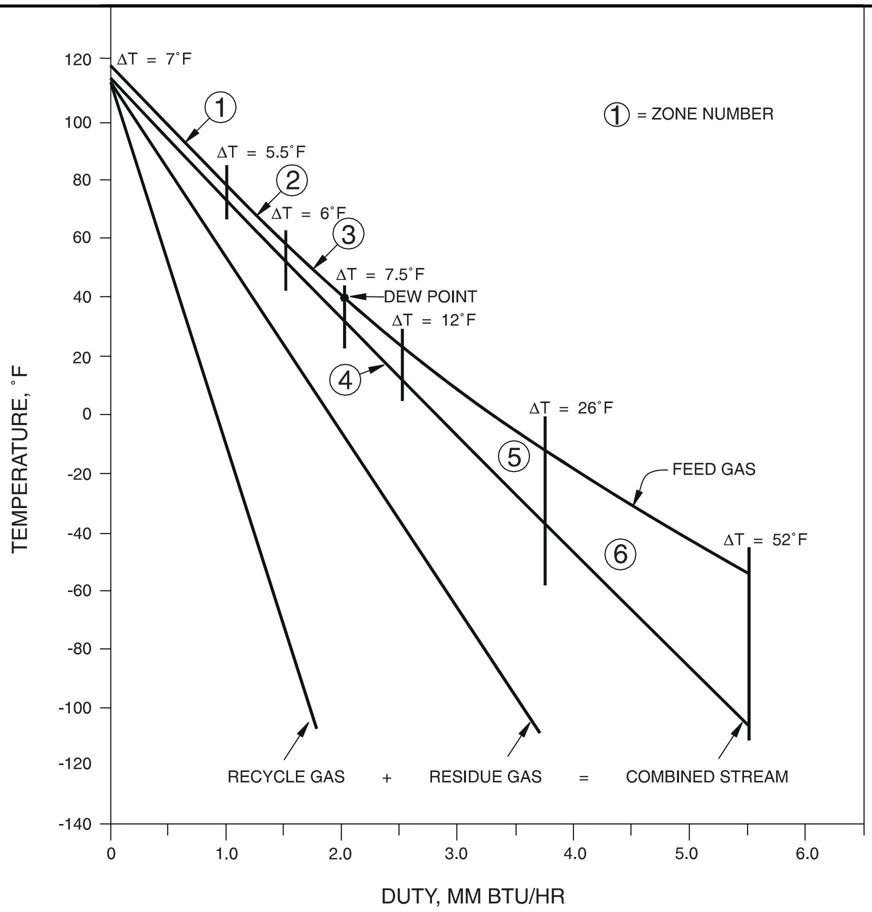

TEMPERATURE DUTY DATA

FEED GAS (WARM STREAM)

T (°F)	DUTY (MM BTU/HR)	Xv
120	0	1.0
96	0.585	1.0
72	1.179	1.0
48	1.785	1.0
24	2.504	0.977
0	3.339	0.931
24	4.230	0.879
54	5.500	0.792

RESIDUE GAS (COLD STREAM)

T (°F)	DUTY (MM BTU/HR)	Xv
113	0	1.0
64.6	0.824	1.0
16.2	1.636	1.0
– 32.2	2.443	1.0
– 80.6	3.252	1.0
– 106	3.700	1.0

RESIDUE GAS (COLD STREAM)

T (°F)	DUTY (MM BTU/HR)	Xv
113	0	1.0
64.6	0.394	1.0
16.2	0.783	1.0
– 32.2	1.173	1.0
– 80.6	1.570	1.0
– 106	1.800	1.0

HEAT EXCHANGE ZONES

ZONE	LMTD (°F)	DUTY (MM BTU/HR)	UA (MM BTU /(HR-°F))
1	6.22	1.0	0.1608
2	5.75	0.5	0.0870
3	6.72	0.5	0.0744
4	9.57	0.5	0.0522
5	18.1	1.25	0.0691
6	37.5	1.75	0.0467
TOTAL	CMTD	5.5	0.4902

$$\text{CMTD} = \frac{Q}{UA} = \frac{5.5}{0.4902} = 11.22°\text{F}$$

Courtesy ALTEC International, Inc.

the estimate for the corrected mean temperature difference (CMTD) and the exchanger performance. The following are some useful guidelines for proper selection of a zone:

1. The temperature difference between the warm and cold composite streams must be essentially a linear function of duty; i.e., straight line.
2. The heat transfer coefficients in each stream must be nearly constant.
3. The properties of the fluids in each stream should be nearly constant. This is usually necessary in order for the heat transfer coefficient to remain essentially constant and for achieving reasonable accuracy in estimating stream pressure drop. This is particularly true for two-phase streams; therefore, special care should be taken in selecting zones when two-phase fluids are involved.

Heat leak in cryogenic heat exchangers is another factor which will affect the cooling curve. It acts as an unwanted heat flow into the heat exchange fluids and will reduce the CMTD. Heat leak and inaccuracies in the fluid thermodynamic data used to generate the cooling curve can significantly reduce the CMTD and increase the UA required for a particular process. For well insulated exchangers, heat leak normally has a negligible effect on the CMTD. However, the amount of heat leak should always be checked and combined as another warm stream on the cooling curve to determine its effect on the CMTD.

Design Considerations for Two-Phase Flow

Procedures for designing brazed aluminum heat exchangers for single-phase streams are well publicized by manufacturers and by Kays and London.[3] The design of brazed aluminum heat exchangers for two-phase streams is not as well published.

Brazed aluminum heat exchangers are often used with two-phase streams in gas processing applications. Generally, condensing is performed vertically downward and vaporization vertically upward.

Pressure drop is usually evaluated with the Lockhart and Martinelli[4] method which has been found to be reasonable for both vaporizing and condensing streams.

Since evaluation of the heat transfer coefficients for two-phase streams in brazed aluminum heat exchangers has not been well reported in the literature, most manufacturers use their own proprietary calculation procedures.

Two-phase (liquid-vapor) heat transfer in brazed aluminum heat exchangers is usually dominated by the forced convection mechanism. This convection mechanism tends to suppress any nucleate boiling.

The two-phase forced convection heat transfer coefficients for multi-component fluids are evaluated using the method described by Bell and Ghaly.[5] This method provides for reducing the two-phase heat transfer coefficient to account for the mass transfer resistance that is a characteristic of multi-component heat transfer.

Fluid distribution is always an important consideration when designing high effectiveness heat exchangers. Special care must be taken to ensure that the fluids maintain homogenous flow throughout the heat exchanger. This is especially important with two-phase streams, where fluid maldistribution can significantly reduce the performance of the heat exchanger. For this reason, special distributors are available for use with fluids which enter the exchanger in a two-phase condition. Fluid distribution for such an inlet condition is often handled by separating the vapor and liquid phases in a knock-out drum. The separated vapor and liquid phases are then distributed individually into the exchanger using conventional single-phase distributor arrangements. The vapor and liquid phases are then recombined inside the exchanger in the heat transfer zone. This method is the preferred arrangement for distributing fluids which enter the heat exchanger in a two-phase condition. However, sometimes alternative simple approaches to a two-phase inlet can be used. This choice depends on a thorough analysis of the effects of the potential vapor/liquid maldistribution on the cooling curve and performance of the exchanger.

Brazed aluminum heat exchangers are well suited for thermosyphon applications such as demethanizer reboilers and propane chillers. Hydraulic design considerations are the same as for shell and tube exchangers.

Approximate Sizing Procedure

The following is a quick and simple method for estimating the approximate size and performance of gas-to-gas exchangers and demethanizer reboilers used for ethane recovery. This short-cut method is applicable only for services condensing up to 30% (wt.) of feed gas or for reboilers vaporizing up to 20% (wt.) of feed liquid. For services outside these limits, a plate fin design specialist should be consulted.

The following sample problem illustrates the approximate sizing procedure for a gas-to-gas exchanger. Typically, this application involves a warm feed gas operating at pressures between 500 psia and 1,100 psia, which is cooled from above 100°F to below –100°F, and will partially condense up to 30% of its mass. The refrigeration is supplied by cold residue or recycle gas streams which normally operate at between 100 and 300 psia. Warm end temperature approaches for this exchanger are typically designed from 5 to 10°F. This sample problem is the same example used in the heat load curve (Fig. 9-39) and in the brazed aluminum heat exchanger specification (Fig. 9-39) for an optimized selection. The results of the rough selection agree well with the optimized selection. Lines 1 through 37 of Fig. 9-38 are given data, provided by the purchaser.

Example 9-4 — For purposes of simplifying this quick selection procedure, the following are assumed:

A fouling factor of 0.001 is included on each stream.

The CMTD was calculated assuming that heat leak was negligible, as per the example of Fig. 9-39.

The estimation of heat exchanger size by this quick procedure is reduced to a single-zone calculation. Precise selections by the manufacturers normally involve a multizone analysis of the heat exchanger.

Solution Steps

Step 1 — Determine Exchanger Cross Section

From Fig. 9-40, select the typical mass velocities (G) for each stream based on their respective operating pressures:

Feed Gas (810 psia)

$$G_H = 18.6 \text{ lb/(sq ft} \bullet \text{sec)}$$

Residue Gas (205 psia)

$$G_C = 9.7 \text{ lb/(sq ft} \bullet \text{sec)}$$

Recycle Gas (285 psia)

FIG. 9-40

Typical Operating Mass Velocities Gas Processing Exchangers

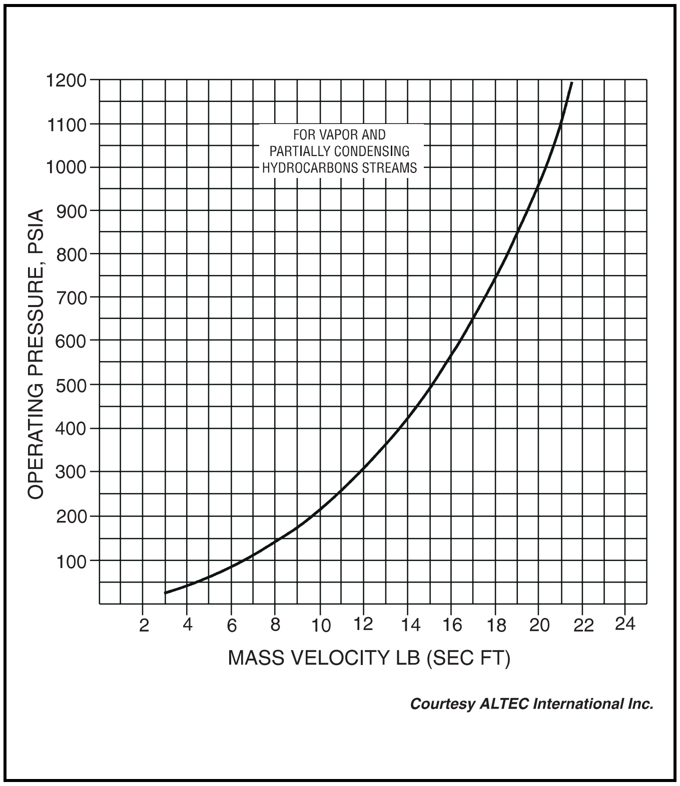

Courtesy ALTEC International Inc.

$$G_C = 11.6 \text{ lb/(sq ft} \bullet \text{sec)}$$

Using these G values, the exchanger cross section can be computed from the following equations:

$$H = \frac{0.083}{WN} \sum_{i=1}^{i=n} \left(\frac{\dot{m}_i}{G_i} \right), \text{ for gas to gas exchangers} \quad \textbf{Eq 9-15}$$

Where n = total number of all warm and cold streams

$$H = \frac{0.166}{WN} \left(\frac{\dot{m}_H}{G_H} \right), \text{ for demethanizer reboilers} \quad \textbf{Eq 9-16}$$

In order to use the above equations, initially choose a number of exchangers (N) and an exchanger width (W). Common exchanger widths are 12, 17, 25, 36, 42, and 48 inches. Select the cross section so that the stack height (H) is within the maximum size ranges shown in Fig. 9-35. For smaller cross section requirements, a good rule of thumb is to select a stack height which is nearly equal to the exchanger width. For the gas to gas exchanger, Example 9-4, assume one exchanger, 25 inches wide, and use equation 9-15:

$$H = \frac{0.083}{(25)\,(1)} \left[\frac{40650}{18.6} + \frac{31320}{9.7} + \frac{14780}{11.6} \right]$$

$$H = 22.2 \text{ inches}$$

The exchanger cross section has now been established at 25 inches wide x 22.2 inches high.

Step 2 — Determine Exchanger Length

First calculate the required UA from the heat load curve (see Fig. 9-39):

$$UA = UA_{\text{zone 1}} + UA_{\text{zone 2}} + \ldots + UA_{\text{zone 6}} = \frac{Q}{CMTD}$$

$$= \frac{5{,}500{,}000}{11.22}$$

$$= 490{,}200 \text{ Btu/(hr} \bullet {}^\circ\text{F)}$$

From one of the following equations, depending on fin preference, calculate the exchanger length. When both perforated and serrated fins are used in the heat exchanger, use the average value obtained from Equations 9-17 and 9-18 (or Equations 9-20 and 9-21 for demethanizer reboilers). Serrated fins are high performance and yield shorter exchanger lengths with higher stream pressure drops. Perforated fins are lower performers and will yield longer exchangers with lower pressure drops. Plain fins are lowest performers and are normally only used in distributors, due to their low pressure drop characteristics. Normally, serrated fins provide the most optimum selection, unless pressure drop/operating cost is the controlling parameter.

For gas to gas exchangers (where feed gases condense up to 30% of their mass):

For serrated fin exchangers —

$$L = \frac{UA}{WHN \sqrt{G_{\text{Total}}}} + 0.65W \quad \textbf{Eq 9-17}$$

For perforated fin exchangers —

$$L = \frac{1.5\ UA}{WHN \sqrt{G_{\text{Total}}}} + 0.65W \quad \textbf{Eq 9-18}$$

$$\text{Where } G_{\text{Total}} = (G_H)_{\text{Avg}} + (G_C)_{\text{Avg}} \quad \textbf{Eq 9-19}$$

For demethanizer reboilers (where demethanizer liquids evaporate up to 20% of their mass):

For serrated fin exchangers —

$$L = \frac{0.67\ UA}{WHN \sqrt{G_H}} + 0.65W \quad \textbf{Eq 9-20}$$

For perforated fin exchangers —

$$L = \frac{UA}{WHN \sqrt{G_H}} + 0.65W \quad \textbf{Eq 9-21}$$

For one gas to gas exchanger, 25 inches (W) x 22.2 inches (H), using serrated fins, and a UA required of 490,200 Btu/(hr·°F), the required length to the nearest inch is:

$$L = \frac{490{,}200}{(25)\,(22.2)\,(1) \sqrt{18.6 + (9.7 + 11.6)/2}} + 0.65(25)$$

$$L = 180 \text{ inches}$$

The heat exchanger size is now established as:

One exchanger, 25 x 22.2 x 180 inches.

If exchanger length is too long for packaging and/or transportation considerations, lower the mass velocities (G) and return to Step 1. This will increase the core cross section and decrease the core length.

Step 3 — Check Stream Pressure Drops

The last step in rough sizing the heat exchanger is to verify that pressure drop for the exchanger size selected is within allowable levels for all streams. Pressure drop can vary widely depending on type and size of distributors chosen, the amount of phase change in two-phase streams, and other factors. The following equations will yield approximate stream frictional pressure drop which includes the heat transfer zone, distributors, and nozzles.

For Serrated Fin Exchangers:

For vapor streams —

$$\Delta P = \frac{(4.4)\,(10^{-4})\,(L + 20)\,(G)^{1.8}}{\rho_m} \qquad \textbf{Eq 9-22}$$

For partially condensing streams (up to 30% of mass condensed) —

$$\Delta P = \frac{(8.8)\,(10^{-4})\,(L + 40)\,(G)^{1.8}}{\rho_m} \qquad \textbf{Eq 9-23}$$

For Perforated Fin Exchangers:

For vapor streams —

$$\Delta P = \frac{(0.95)\,(10^{-4})\,(L + 95)\,(G)^{1.8}}{\rho_m} \qquad \textbf{Eq 9-24}$$

For partially condensing streams (up to 30% of mass condensed) —

$$\Delta P = \frac{(1.9)\,(10^{-4})\,(L + 190)\,(G)^{1.8}}{\rho_m} \qquad \textbf{Eq 9-25}$$

$$\text{where } \rho_m = \frac{2(\rho_{in})\,(\rho_{out})}{\rho_{in} + \rho_{out}} \qquad \textbf{Eq 9-26}$$

And when inlet or outlet conditions are two-phase:

$$\rho_{2\Phi} = \left(\frac{1}{\dfrac{X_V}{\rho_V} + \dfrac{X_L}{\rho_L}}\right) \qquad \textbf{Eq 9-27}$$

Pressure drops for vaporizing liquids are not easily approximated by these rough estimating procedures. However, for these applications, the demethanizer liquid pressure drop will normally be within allowable levels when the exchanger is selected for feed gas mass velocities recommended in Fig. 9-40.

For example problem 9-4:

Feed Gas:

$$\rho_{out} = \rho_{2\Phi} = \left(\frac{1}{\dfrac{0.792}{4.84} + \dfrac{0.208}{28.0}}\right) = 5.85 \text{ lb/ft}^3$$

$$\rho_m = \frac{2(2.79)\,(5.85)}{2.79 + 5.85} = 3.78 \text{ lb/ft}^3$$

$$\Delta P = \frac{(8.8)\,(10^{-4})\,(180 + 40)\,(18.6)^{1.8}}{3.78}$$

$= 9.9$ psi (vs. 10.0 psi allowed)

Residue Gas:

$$\rho_m = \frac{2(1.02)\,(0.56)}{1.02 + 0.56} = 0.72 \text{ lb/ft}^3$$

$$\Delta P = \frac{(4.4)\,(10^{-4})\,(180 + 20)\,(9.7)^{1.8}}{0.72}$$

$= 7.3$ psi (vs. 7.0 psi allowed)

Recycle Gas:

$$\rho_m = \frac{2(1.32)\,(0.80)}{1.32 + 0.80} = 1.00 \text{ lb/ft}^3$$

$$\Delta P = \frac{(4.4)\,(10^{-4})\,(180 + 20)\,(11.6)^{1.8}}{1.00}$$

$= 7.2$ psi (vs. 7.0 psi allowed)

For selections requiring more than one heat exchanger, the pressure drop for the manifold piping which interconnects the individual heat exchangers can be estimated according to the method developed by F. A. Zenz,[6] and must be added to the pressure drops for the individual exchanger(s) calculated by the above procedures to arrive at the total unit pressure drop. For the single core Example 9-4, this is not required, and the pressure drops are only slightly over allowable. If pressure drops were too excessive, it would be necessary to return to Step 1 (Equation 9-15) and to lower the mass velocities (G). This has the effect of increasing exchanger cross section until the desired pressure drop is achieved. Use the following equation for approximating a new mass velocity which will yield the allowable pressure drop.

$$G_{new} = G_{old}\left[\frac{\Delta P_{allowed}}{\Delta P_{old}}\right]^{0.56} \qquad \textbf{Eq 9-28}$$

The above sizing procedure should produce estimates of exchanger size which will be within plus or minus 15% and pressure drops which should be within plus or minus 25% of the final design.

INSTALLATION-OPERATION-MAINTENANCE

Mounting

Brazed aluminum heat exchangers are normally installed in a vertical orientation with the operational cold end down, and are supported with either aluminum support angles or an aluminum pedestal base supplied by the heat exchanger manufacturer. This type of support system is the most common for mounting the exchanger to steel framework or onto a platform. Other orientations of the heat exchangers and other support systems are sometimes permissible, but only when designed for special service by the manufacturer.

External loads on the heat exchanger can be imposed through the connecting piping due to mechanical or thermal loading or both. All support systems should be designed to minimize these loads and their effect on the heat exchanger. This is accomplished by providing sufficient pipe flexibility and by providing allowance for movement at the heat exchanger support member by using slotted bolt holes and bolts that are only finger tight. All support systems should be additionally safeguarded by use of sway bracing on the end of the exchanger opposite the main support system whenever the total external pipe loads on the exchanger will produce reaction forces at the main support members which exceed the actual weight of the exchanger.

Insulation

Since the exchangers are usually operating at cryogenic temperatures, highly efficient insulation is required to minimize heat leak. Typically, the exchanger is mounted in a cold box which is filled with perlite or rock wool. When the exchanger is not mounted inside a cold box, its exterior is normally insulated with rigid polyurethane foam. An alternative is Foamglas® insulation. These insulations are positioned and fastened around the exchanger and covered with a vapor barrier. Protective metal coverings or flashing can be used for this purpose. Some form of insulation (such as micarta spacers) should be used between the heat exchanger support member and the supporting beam or platform.

Field Testing and Repair

Maximum working pressures and temperatures are always specified on the manufacturer's nameplate. These values should not be exceeded during field testing or operation. Since it is extremely difficult to dry brazed aluminum heat exchangers in the field, only a clean dry gas should be used for leak testing.

Internal leaks in a brazed aluminum heat exchanger are generally indicated by a change of purity in any of the fluid streams. External leaks can be determined by sight, smell, audible sounds of leaking fluid, external gas monitoring equipment, or localized cold spots appearing on the external insulation. External leaks in exchangers mounted in a cold box are generally indicated by excessive venting through the cold box breather valves.

Several tests are available for locating external or internal leaks. An air-soap test is effective for locating external leaks. An air test with soap applied to nozzle connections or a nitrogen-freon test can be used to identify the streams involved in an internal or cross pass leak. Internal and external leaks usually can be repaired by blocking layers, making localized external welds, etc. Qualified manufacturer's representatives are usually required to establish the exact location of an internal leak and to make any repairs.

Hydrate Suppression

During start-up, upset, or even normal operating conditions, hydrates and/or heavy hydrocarbons may freeze out and block sections of the heat exchanger.

Injection sparge systems (see Fig. 9-41) are designed for injecting either methanol or glycol into the feed gas entering the exchanger. This method of hydrate suppression has proven effective.

FIG. 9-41

Typical Methanol or Glycol Injection Sparge System

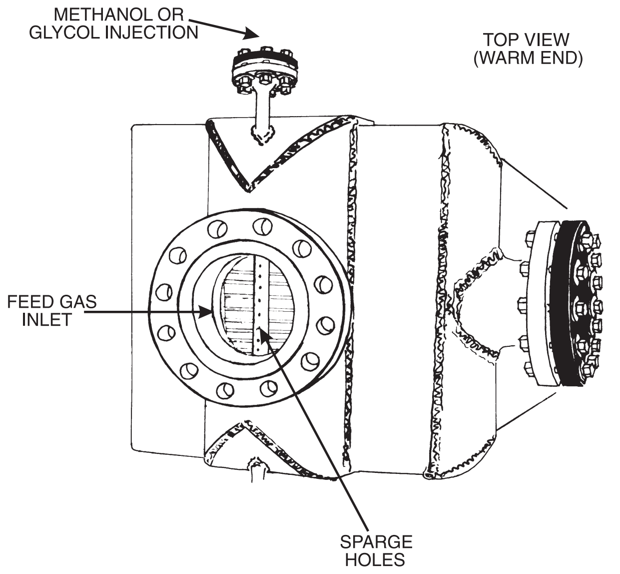

Courtesy ALTEC International, Inc.

Cleaning

Only clean, dry fluids which are non-corrosive to aluminum should be used in brazed aluminum heat exchangers. The presence of particulates in the fluid resulting from start-up or mal-operation may not only lead to exchanger fouling but may also cause erosion in the high velocity areas of the exchanger. This can be prevented with proper filtering (177 micron screen-80 mesh Tyler standard, or finer) upstream of the brazed aluminum heat exchanger. A heavy duty, cleanable filter or strainer is strongly recommended on the inlet of all streams entering the exchanger.

Fouling which is caused by hydrate formation can be removed by warming the exchanger to ambient conditions. Deposits of heavy hydrocarbons, waxy materials, or compressor oils can be removed by a combination of warming and a solvent rinse. Solvents such as trichloroethane, toluene, or propylene are effective.

If plugging occurs, reverse gas flow, called puffing, is an effective method of removing particulate matter such as adsorbents, pipe scale, sand, or other solid debris. It involves the use of a calibrated rupture disk on the inlet nozzle of the plugged stream and one or more charges and ruptures to establish reverse flow with a dry gas until the particulate matter has been removed. Extreme care must be exercised to prevent exposure of personnel or equipment to explosive or toxic fluids and flying debris.

OTHER USES OF CORE BLOCKS

Core-in-Kettle©

These heat exchangers look and operate like "kettle" type shell and tube heat exchangers. Tube bundles are replaced with brazed aluminum cores. Because the cores contain about ten times more heat transfer surface area than comparable sized shell and tube exchangers, smaller core-in-kettle units can be used or greater heat transfer can be obtained which may also reduce system horsepower requirements. See Fig. 9-42. In a different physical configuration, cores can also be placed inside horizontal pressure vessels with standard elliptical heads. When these exchangers are used in reboiler applications, adequate vapor disengaging space must be provided above the core to prevent excessive liquid carryover. Brazed aluminum cores can also be placed at the top of a vertical distillation tower to allow overhead vapors to pass through on one side of a parting sheet with refrigerant on the other side.

FIG. 9-42

Relative Exchanger Sizes

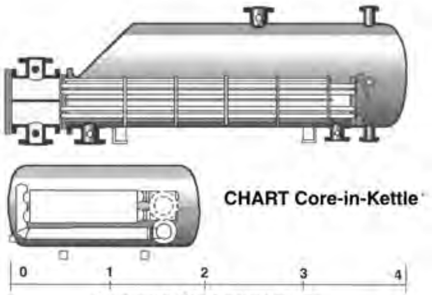

Courtesy of Chart Industries, Inc.

Any condensed liquid is allowed to run back down the exchanger and re-enter the tower proper as reflux.

As in brazed aluminum plate-fin exchangers, approach temperatures as low as 3°F on single phase fluids can be achieved. Applications for these heat exchangers include propane chillers, feed coolers, and tower reboilers.

Plate Frame Heat Exchangers

A typical plate and frame heat exchanger "PHE" (sometimes referred to as a gasketed plate heat exchanger) is shown in an exploded view in Fig. 9-43. The PHE consists of an arrangement of gasketed pressed metal plates (heat transfer surface), aligned on two carrying bars, secured between two covers by compression bolts. Inlet and outlet ports for both hot and cold fluids are stamped into the corners of each plate. The ports are lined up to form distribution headers through the plate pack. All four fluid connections are usually located in the fixed end cover. This permits opening the exchanger without disconnecting any piping. Plates can be added and removed in the field should service requirements change. The plates are pressed into one of a number of available patterns and may be constructed of any material which can be cold formed to the desired pattern. The welding characteristics of the plate material are not of prime importance since very little or no welding is involved in plate construction.

Gasket grooves are pressed into the plates as they are formed. The gaskets are generally made of elastomers such as natural rubber, nitrile, butyl, neoprene, etc. The gasket material chosen depends on the temperature, pressure, and chemical characteristics of the fluid to which it will be exposed. The gasket cross-section varies with different plate designs and sizes. Rectangular, trapezoidal, or oval cross-sections are the most common. The width is generally 5-15 mm, depending on spacing. The height of the gasket before it is compressed is 15 to 50% higher than the spacing, depending on material, cross-section of gasket, gasket track, and gasket hardness. When the plate stack is compressed, the exposed surface of the gasket is very small. The gaskets are generally arranged in such a way that the through pass portal is sealed independently of the boundary gasket. Leaks from one fluid to the other cannot take place unless a plate develops a hole. Any leakage from the gaskets is to the outside of the exchanger where it is easily detected.

FIG. 9-43

Plate and Frame Heat Exchanger

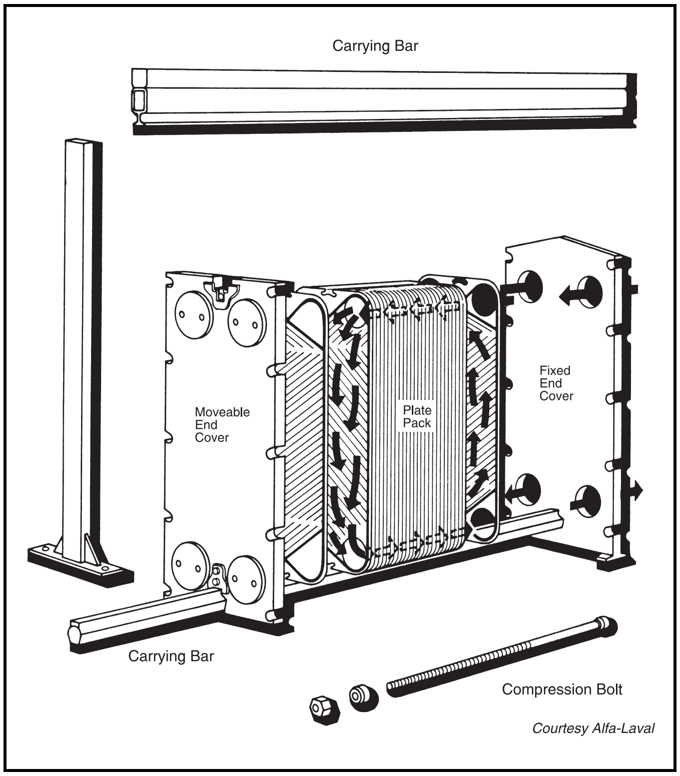

Courtesy Alfa-Laval

Since the plates are generally designed to form channels giving highly turbulent flow, the PHE produces higher heat transfer coefficients for liquid flow than most other types. The high heat transfer coefficients are developed through the efficient use of pressure drop.

Advantages

The PHE has the following advantages over conventional shell and tube heat exchangers:

1. It can easily be disassembled for cleaning.
2. The plates can be rearranged, added to, or removed from the plate rack for difference service conditions.
3. The fluid residence time is short (low fluid volume to surface area ratio).
4. No hot or cold spots exist which could damage temperature sensitive fluids.
5. Fluid leakage between streams cannot occur unless plate material fails.
6. Fluid leakage due to a defective or damaged gasket is external and easily detected.
7. Low fouling is encountered due to the high turbulence created by the plates.
8. A very small plot area is required relative to a shell and tube type heat exchanger for the same service.
9. The maintenance service area required is within the frame size of the exchanger.

Disadvantages

1. Care must be taken by maintenance personnel to prevent damage to the gaskets during disassembly, cleaning, and reassembly.
2. A relatively low upper design temperature limitation exists.
3. A relatively low upper design pressure limitation exists.
4. Gasket materials are not compatible with all fluids.

Applications

The PHE is normally used in liquid services. This type of heat exchanger is considered to be a high heat transfer, high pressure drop device, but it can be used for services requiring a low pressure drop with the associated reduction in heat transfer coefficients.

Since the plates are thin, the PHE gives a relatively high heat transfer coefficient for the mass of material required. When alloy materials are required, the PHE is competitive with more conventional heat exchanger designs.

Materials of Construction

The frames are usually fabricated from carbon steel while the tension bolts are high tensile strength steel. Common plate materials include 304 and 316 stainless steel, titanium, Incoloy 825®, Hastelloy®, aluminum-bronze, tantalum, copper-nickel, aluminum, and palladium stabilized titanium. The PHE can be fabricated and stamped to the ASME Code.

Maximum Pressure and Temperature Ratings

Maximum allowable working pressure may be determined by frame strength, gasket retainment, or plate deformation resistance. Of these, it is often the frame that limits operating pressure, so that many manufacturers produce a low cost frame for low pressure duties (typically up to 85 psig) and a more substantial frame for higher pressures, for the same plate size. Maximum operating pressure for a typical PHE is normally 140-230 psig, but some types are designed to operate over 300 psig.

Normally, it is gaskets that limit the maximum operating temperature for a plate heat exchanger. Fig. 9-44 provides typical temperature limitations for common gasket materials not subject to chemical attack.

FIG. 9-44

Typical Gasket Material Temperature Limitations

Gasket Material	Temperature Limitation
Natural rubber, styrene, neoprene	160°F
Nitrile	210°F
Resin-cured butyl, viton	300°F
Ethylene/propylene, silicone	300°F
Compressed non-asbestos fiber	390°F

Size Limitations

The surface area per plate and number of plates per frame varies depending upon the manufacturer. Typically, surface area ranges between 0.4 and 39 square feet per plate. Frame sizes have been manufactured to contain up to 600 plates. When larger surface areas are required, multiple units are supplied.

Fouling Factors

Fouling factors required in the PHE are small compared with those commonly used in shell and tube designs for the following reasons:

1. High turbulence maintains solids in suspension.
2. Heat transfer surfaces are smooth. For some applications, a mirror finish may be available.
3. There are no "dead spaces" where fluids can stagnate, as for example, near the shell-side baffles in a tubular unit.
4. Since the plate is necessarily of a material not subject to massive corrosion, deposits of corrosion products to which fouling can adhere are absent.
5. High film coefficients lead to lower surface temperatures for the cold fluid (the cold fluid is usually the culprit as far as fouling is concerned).

Fig. 9-45 lists typical fouling factors for PHEs.

FIG. 9-45

Typical Fouling Factors for PHEs

Fluid	Fouling Factor Sq ft-°F-Hr/Btu
Water	
Demineralized or distilled	0.00001
Municipal supply (soft)	0.00002
Municipal supply (hard)	0.00005
Cooling tower (treated)	0.00004
Sea (coastal) or estuary	0.00005
Sea (ocean)	0.00003
River, canal, borehole, etc.	0.00005
Engine jacket	0.00006
Oils, lubricating	0.00002 to 0.00005
Solvents, organic	0.00001 to 0.00003
Steam	0.00001
Process fluids, general	0.00001 to 0.00006

PRINTED CIRCUIT HEAT EXCHANGERS

General

Printed Circuit Heat Exchangers (PCHEs) are highly compact, corrosion resistant heat exchangers capable of operating at pressures of several hundred atmospheres and temperatures ranging from cryogenic to several hundred degrees Fahrenheit.

PCHEs are constructed from flat alloy plates which have fluid flow passages photo-chemically machined (etched) into them. This process is similar to manufacturing electronic printed circuit boards, and gives rise to the name of the exchangers. In the case of PCHEs, it is fluid circuits which are formed by etching.

Stacks of etched plates, carrying flow passage designs tailored for each fluid, are interleaved and diffusion bonded together into solid blocks. Diffusion bonding is a solid state welding process in which the flat and clean metal surfaces are held together at high temperatures, resulting in interfacial crystal growth between the touching surfaces which gives rise to a bond strength equal to that of the bulk metal.

The thermal capacity of the exchanger is built to the required level by welding together diffusion bonded blocks to form the complete heat exchange core. Headers and nozzles are welded on to the core in order to direct the fluids to the appropriate sets of passages. Fig. 9-46 shows the complete construction of a two-fluid exchanger.

PCHEs are all-welded — there is no braze material employed in construction, and no gaskets are required. Hence the potential for leakage and fluid-compatability is reduced. In fact the high level of constructional integrity renders PCHEs exceptionally well suited to critical high pressure applications, such as high-pressure gas exchangers on offshore platforms.

The thermal design of PCHEs is subject to very few constraints. Fluids may be liquid, gas or two-phase, and they can exchange heat in counterflow, crossflow or coflow at any required pressure drop. Where energy is expensive, high heat exchange effectiveness can be achieved through very close temperature approaches in counterflow. To simplify control, or to further maximize energy efficiency, more than two fluids can exchange heat in a single core. Heat loads can vary from

FIG. 9-46

Construction of a Two-fluid PCHE

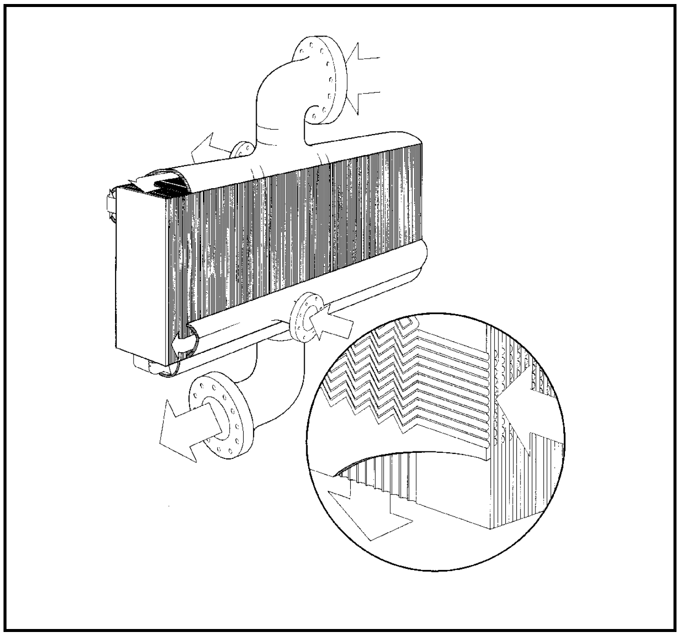

a few Btu/hr to many Btu/hr, in exchangers weighing from a few pounds to over 50 tons.

Mechanical design is also flexible. Etching patterns can be adjusted to provide high pressure containment where required — design pressure may be several hundred atmospheres. The all-welded construction is compatible with very high temperature operation, and the use of austenitic stainless steels allows cryogenic application. It is worthy of note that vibration is absent from PCHEs as this can be an important source of failure in shell-and-tube exchangers.

Materials of construction include stainless steel and titanium as standard, with nickel and nickel alloys also commonly used.

Passages are typically of the order of 2000 microns semi-circular cross-section — that is, 2000 microns across and 1000 microns deep — for reasonably clean applications, although there is no absolute limit on passage size. The corrosion resistant materials of construction for PCHEs, the high wall shear stresses, and the absence of dead-spots assist in resisting fouling deposition.

Prime heat transfer surface densities, expressed in terms of effective heat transfer area per unit volume, can be up to 800 ft^2/ft^3. This is higher than prime surface densities in gasketed plate exchangers, and an order of magnitude higher than normal prime surface densities in shell-and-tube exchangers.

Design

Detailed thermal design of PCHEs is supported by proprietary design software developed by the manufacturers which allows for infinite geometric variation to passage arrangements in design optimization. Variations to passage geometry have negligible production cost impact since the only tooling required for each variation is a photographic transparency for the photo-chemical machining process.

Although the scope of PCHE capabilities is much wider, as a sizing guide it is safe to assume that channel patterns can be developed to mimic any j- and f-factors characteristics found in publications such as “Compact Heat Exchangers” by Kays and London for aluminum surfaces, or data presented by gasketed plate exchanger manufacturers.

It is rarely necessary to apply a correction factor substantially less than 1 to the LMTD calculated for an exchange, no matter how high the effectiveness required, because of the PCHE counterflow capabilities. Pressure drops can be specified at will; however, as with all heat exchangers, lower allowable pressure drops will result in low heat transfer coefficients and hence larger exchangers.

Applications

PCHEs extend the benefits of compact exchangers into applications where pressure, temperature or corrosivity prevent the use of conventional plate exchangers.

In hydrocarbons processing, PCHEs are employed with gas streams (possibly sour) in such areas as:

- compression aftercooling,
- gas/gas counterflow exchange for dewpoint control,
- cryogenic inerts removal and
- liquefaction.

The use of multi-stream contact in these duties is common. In refineries, suitable applications are to be found in light ends processing and feed-effluent exchange for platforming and HDS units.

Chemicals applications include duties requiring:

- high pressure capabilitiy, such as ammonia and methanol production,
- corrosion resistant materials, such as pure nickel for caustic soda and titanium for chloride environments, and
- high effectiveness counterflow contact, including heat recovery.

In power production, PCHEs are applicble as feedwater heaters, fuel gas heaters, water/water exchangers, and in various roles in non-conventional power production systems such as geothermal and solar.

EVAPORATIVE COOLING SYSTEMS

Evaporative cooling systems provide process fluid cooling without the use of a cooling tower and large water recirculating pumps. These systems combine the functions of an open cooling tower and heat exchanger by replacing the wet deck surface with a coil type heat exchanger. The liquid to be cooled is circulated through the coil or tube bundle, which is continually wetted on the outside by a recirculating water system. Air is simultaneously blown over the coil, causing a small portion of the recirculating water to evaporate. This evaporation removes heat from the water allowing for the cooling of the liquid in the coil. The process fluid outlet temperature’s approach to the ambient wet bulb temperature is determined on a case by case basis.

A variety of coil arrangements are available as well as alternate coil materials. ASME "U" stamping for coil construction is available where applicable. Fans provide the necessary air movement which can be either co-current or countercurrent to the water flow.

REFERENCES

1. Diehl, J. E., and Koppany, C. R., "Flooding Velocity Correlation for Gas-Liquid Counterflow in Vertical Tubes," Chemical Engineering Progress, Vol. 65, No. 92, 1969, pp. 77-83.
2. Bell, K. J., "Temperature Profiles in Condensers," Chemical Engineering Progress, Vol. 68, No. 7, July 1972, p. 81.
3. Kays, W. M., and London, A. L., Compact Heat Exchangers, National Press, Palo Alto, California, 1964.
4. Lockhart, R. W., and Martinelli, R. C., "Proposed Correlation of Data for Isothermal Two-Phase, Two-Component Flow in Pipes," Chemical Engineering Progress, Vol. 45, No. 1, pp. 39-48, January 1949.
5. Bell, K. J. and Ghaly, M. A., "An Approximate Generalized Design Method for Multicomponent/Partial Condensers," AIChE Symposium Series, Vol. 69, No. 131, pp. 72-79, 1973.
6. Zenz, F. A., "Minimize Manifold Pressure Drop," Hydrocarbon Processing, p. 125, December 1962.

BIBLIOGRAPHY

1. Bell, K. J., "Final Report of the Cooperative Research Program on Shell and Tube Heat Exchangers," University of Delaware, Bulletin No. 5, June 1963.
2. Kern, D. Q., "Process Heat Transfer," McGraw-Hill Book Company, 1950.
3. McAdams, W. H., "Heat Transmission," McGraw-Hill Book Company, 1954.
4. Fraas, A. P. and Ozisik, M. N., "Heat Exchanger Design," John Wiley & Sons, 1965.
5. Perry, R. H. and Chilton, C. H., "Chemical Engineers' Handbook," McGraw-Hill Book Company, 1984, secs. 10 & 11.
6. Fair, J. R., "What You Need to Design Thermosiphon Reboilers," Petroleum Refiner, Vol. 39, No. 2, Feb. 1960, pp. 105-123.
7. Kreith, Frank, "Principles of Heat Transfer," Third Edition, Harper and Rowe, 1983.
8. Rohsenow, W. M. and Hartnet, J. P., "Handbook of Heat Transfer," McGraw-Hill Book Company, 1973.
9. "Standards of Tubular Exchanger Manufacturers Association," Tubular Exchangers Manufacturers Association, 1999.
10. Brown Fintube Company, Bulletin No.'s 114A, 115A, 1000, and 1010.
11. Bastex Corporation, Bulletin No.'s 20-1, 30-1, and 60-1.
12. ASME Boiler and Pressure Vessel Code, Section VIII, Division I, "Rules for Construction of Pressure Vessels," Summer, 1992.
13. ASME Boiler and Pressure Vessel Code, Section II, Part B, "Nonferrous Materials or the Requirements of the Specified Code Authority," 1992.
14. ASME Boiler and Pressure Vessel Code, Section IX, "Welding and Brazing Qualifications," 1992.
15. Butt, A. G., "Mechanical Design of Cryogenic Heat Exchangers," Symposium on Compact Heat Exchangers: History, Technological Advancement and Mechanical Design Problems, HTD-Vol. 10, ASME, 1980.
16. Duncan, F. D. and Wahlen, J. J., "Large Tonnage Oxygen Plants—Brazed Aluminum Technology and Equipment for the 80's," Symposium on Cryogenic Processes and Equipment in Energy Systems, ASME, 1980.
17. Holman, J. P., "Heat Transfer," McGraw-Hill, Second Edition, 1963.
18. ANSI, Chemical Plant & Petroleum Refinery Piping Code B-31.3, 1980.
19. Kakac, S., Bergles, A. E., Mayinger, F., Editors, "Heat Exchangers; Thermal-Hydraulic Fundamentals and Design," Hemisphere Publishing Corporation, 1981.
20. Marriott, J., "Where and How to Use Plate Heat Exchangers," Chemical Engineering, April 5, 1971, pp. 127-134.

SECTION 10

Air-Cooled Exchangers

An air-cooled exchanger (ACHE) is used to cool fluids with ambient air. Several articles have been published describing in detail their application and economic analysis. (See Bibliography at the end of this section.) This section describes the general design of air-cooled exchangers and presents a method of approximate sizing.

ARRANGEMENT AND MECHANICAL DESIGN

Figs. 10-2 and 10-3 show typical elevation and plan views of horizontal air-cooled exchangers as commonly used. The basic components are one or more tube sections served by one or more axial flow fans, fan drivers, speed reducers, and an enclosing and supporting structure.

Air-cooled exchangers are classed as forced draft when the tube section is located on the discharge side of the fan, and as induced draft when the tube section is located on the suction side of the fan.

Advantages of induced draft are:

- Better distribution of air across the section.
- Less possibility of the hot effluent air recirculating around to the intake of the sections. The hot air is dis-

FIG. 10-1

Nomenclature

A = area of heat transfer surface, sq ft
A_i = inside surface of tube, sq ft
A_b = outside bare tube surface, sq ft
A_x = outside extended surface of tube, sq ft
A_t = tube inside cross-sectional area, sq in. (see Fig. 9-25)
ACFM = actual cubic feet per minute
APF = total external area/ft of fintube, sq ft/ft
APSF = external area of fintube, sq ft/sq ft of bundle face area
AR = area ratio of fintube compared to the exterior area of 1 in. OD bare tube
B = correction factor, psi (see Fig. 10-14)
C_p = specific heat at average temperature, Btu/(lb • °F)
CMTD = corrected mean temperature difference, °F
dB(A) = overall weighted level of sound at a point distant from noise source based on "A" weighting system
D = fan diameter, ft
D_i = inside tube diameter, in.
D_o = outside tube diameter, in.
D_R = density ratio, the ratio of actual air density to the density of dry air at 70°F and 14.7 psia, 0.0749 lb/cu ft (see Fig. 10-16)
f = friction factor (see Fig. 10-15)
F = correction factor (see Fig. 10-8)
F_a = total face area of bundles, sq ft
F_p = air pressure drop factor, in. of water per row of tubes
FAPF = fan area per fan, ft^2/fan
FPM = fan tip speed, feet per minute
g = local acceleration due to gravity, ft/s^2
G = mass velocity, lb/(sq ft • s)
G_a = air face mass velocity, lb/(hr • sq ft) of face area
G_t = tubeside mass velocity, lb/(sq ft • s)
h_a = air side film coefficient Btu/(h • sq ft • °F)
h_s = shell side film coefficient based on outside tube area, Btu/(h • sq ft • °F)
h_t = tube side film coefficient based on inside tube area, Btu/(h • sq ft • °F)
HP = fan horsepower
J = J factor (see Fig. 10-13)
k = thermal conductivity, Btu/[(hr • sq ft • °F)/ft]
L = length of tube, ft
LMTD = log mean temperature difference, °F (see Fig. 9-3)
N = number of rows of tubes in direction of flow
N_f = number of fans
N_P = number of tube passes
N_R = modified Reynolds number, (in • lb/(sq ft • s • cp)
N_t = number of tubes
ΔP = pressure drop, psi
PF = fan total pressure, inches of water
ρ_a = density of air, lb/ cu ft
ρ_w = density of water, lb/ cu ft
P = temperature ratio (see Fig. 10-8)
PWL = sound pressure level
PWLN = PWL for N_f fans
Q = heat transferred, Btu/h
r_d = fouling resistance (fouling factor), (hr • ft$^{2•}$ °F/Btu)
r_f = fluid film resistance (reciprocal of film coefficient)
r_{mb} = metal resistance referred to outside bare surface
r_{mx} = metal resistance referred to outside extended surface
R = distance in feet (see Eq. 10-6)
R = temperature ratio (see Fig. 10-8)
RPM = fan speed, rotations per minute
S = specific gravity (water = 1.0)
SPL = sound pressure level
t = temperature air side, °F
T = temperature tube side, °F
U = overall heat transfer coefficient, Btu/(h • ft^2 • °F)
W = mass flow, lb/hr

FIG. 10-1

Nomenclature (Cont'd.)

Y = correction factor, psi/ft (see Fig. 10-14)
Δt = temperature change, °F
μ = viscosity, cp
μ_w = viscosity at average tube wall temperature, cp
φ = viscosity gradient correction

Subscripts:
a = air side
b = bare tube surface basis
s = shell side
t = tube side
x = extended tube surface basis
1 = inlet
2 = outlet

charged upward at approximately 2½ times the velocity of intake, or about 1500 ft/min.

- Less effect of sun, rain, and hail, since 60% of the face area of the section is covered.
- Increased capacity in the event of fan failure, since the natural draft stack effect is much greater with induced draft.

Disadvantages of induced draft are:

- Higher horsepower since the fan is located in the hot air.
- Effluent air temperature should be limited to 200°F, to prevent potential damage to fan blades, bearings, V-belts, or other mechanical components in the hot air stream.
- The fan drive components are less accessible for maintenance, which may have to be done in the hot air generated by natural convection.
- For inlet process fluids above 350°F, forced draft design should be used; otherwise, fan failure could subject the fan blades and bearings to excessive temperatures.

Advantages of forced draft are:

- Slightly lower horsepower since the fan is in cold air. (Horsepower varies directly as the absolute temperature.)
- Better accessibility of mechanical components for maintenance.
- Easily adaptable for warm air recirculation for cold climates.

The disadvantages of forced draft are:

- Poor distribution of air over the section.
- Greatly increased possibility of hot air recirculation, due to low discharge velocity from the sections and absence of stack.
- Low natural draft capability on fan failure due to small stack effect.
- Total exposure of tubes to sun, rain, and hail.

FIG. 10-2

Typical Side Elevations of Air Coolers

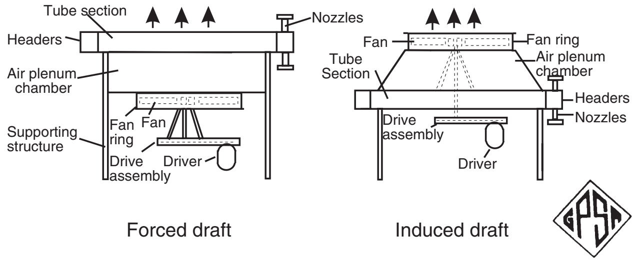

The horizontal section is the most commonly used air cooled section, and generally the most economical. For a fluid with freezing potential, the tubes should be sloped at least ⅛ in. per foot to the outlet header. Since in most cases there will be no problem associated with freezing, and it is more costly to design a sloped unit, most coolers are designed with level sections.

Vertical sections are sometimes used when maximum drainage and head are required, such as for condensing services.

Angled sections, like vertical sections, are used for condensing services, allowing positive drainage. Frequently, angle sections are sloped thirty degrees (30°) from the horizontal.

FIG. 10-3

Typical Plan Views of Air Coolers

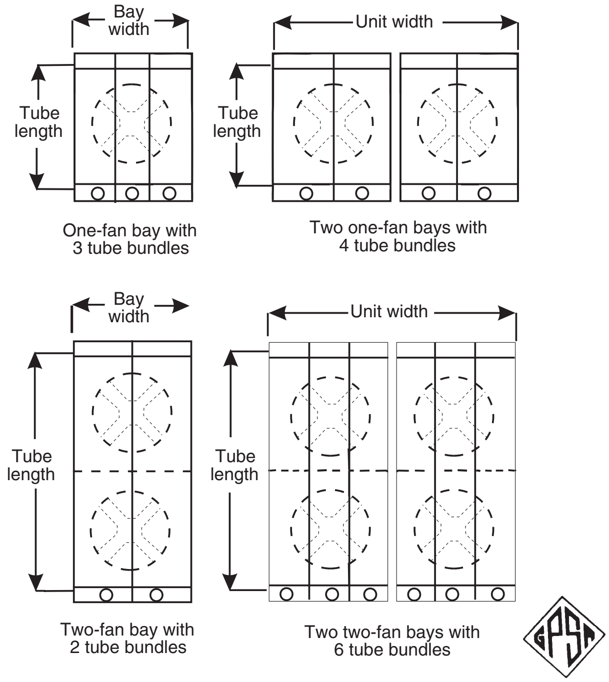

A-frames are usually sloped sixty degrees (60°) from the horizontal. See Fig. 10-4.

Fan sizes range from 3 ft to 28 ft diameter. However, 14 ft to 16 ft diameter is the largest diameter normally used. Fan drivers may be electric motors, steam turbines, hydraulic motors, or gas-gasoline engines. A speed reducer, such as a V-belt drive or reduction gear box, is necessary to match the driver output speed to the relatively slow speed of the axial flow fan. Fan tip speeds are normally 12,000 ft/min or less. General practice is to use V-belt drives up to about 30 bhp and gear drives at higher power. Individual driver size is usually limited to 50 hp.

Two fan bays are popular, since this provides a degree of safety against fan or driver failure and also a method of control by fan staging. Fan coverage is the ratio of the projected area of the fan to the face of the section served by the fan. Good practice is to keep this ratio above 0.40 whenever possible because higher ratios improve air distribution across the face of the tube section. Face area is the plan area of the heat transfer surface available to air flow at the face of the section.

The heat-transfer device is the tube section, which is an assembly of side frames, tube supports, headers, and fin tubes. Aluminum fins are normally applied to the tubes to provide an extended surface on the air side, in order to compensate for the relatively low heat transfer coefficient of the air to the tube. Fin construction types are tension-wrapped, embedded, extruded, and welded.

Tension-wrapped is probably the most common fin type used because of economics. Tension wrapped tubing is common for continuous service with temperatures below 400°F. Extruded fin is a mechanical bond between an inner tube exposed to the process and an outer tube or sleeve (usually aluminum) which is extruded into a high fin. Embedded fin is an aluminum or steel fin grooved into the base tube. Embedded fins are used in cyclic and high temperature services. Other types of finned tubes available are soldered, edge wrapped, and serrated tension wrapped. Coolers are regularly manufactured in tube lengths from 6 ft to 50 ft and in bay widths from 4 ft to 30 ft.

FIG. 10-4

Angled Section Layout

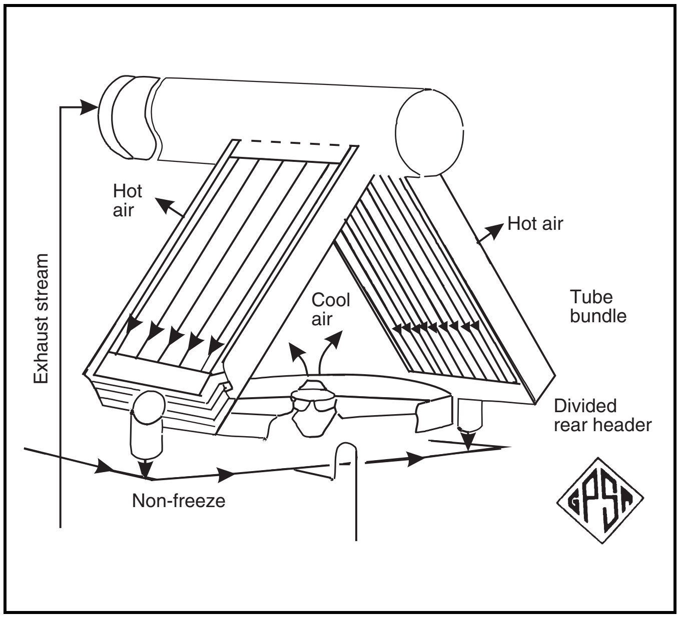

Use of longer tubes usually results in a less costly design compared to using shorter tubes.

Base tube diameters are $\frac{5}{8}$ in. to $1\frac{1}{2}$ in. OD with fins from $\frac{1}{2}$ in. to 1 in. high, spaced from 7 to 11 per inch, providing an extended finned surface of 12 to 25 times the outside surface of the base tubing. Tubes are usually arranged on triangular pitch with the fin tips of adjacent tubes touching or separated by from $\frac{1}{16}$ in. to $\frac{1}{4}$ in. Matching of the tube section to the fan system and the heat transfer requirements usually results in the section having depth of 3 to 8 rows of fin tubes, with 4 rows the most typical.

A 1-in. OD tube is the most popular diameter, and the most common fins are $\frac{1}{2}$ in. or $\frac{5}{8}$ in. high. The data presented in Fig. 10-11 are for 1 in. OD tubes with $\frac{1}{2}$ in. high fins, 9 fins/in. (designated as $\frac{1}{2}$ x 9) and $\frac{5}{8}$ in. high fins, 10 fins/in. (designated as $\frac{5}{8}$ x 10).

Common materials of construction for headers are firebox quality carbon steel, ASTM SA-515-70, SA-516-70. Tubes are generally ASTM SA-214 (ERW), SA-179 (SMLS), carbon steel. Louvers are generally carbon steel, or aluminum with carbon steel construction being the most general and most economical. Fins are normally aluminum. Both stainless and brass alloys have their applications but are more expensive than carbon steel.

HEADER DESIGN

Plug header construction uses a welded box which allows partial access to tubes by means of shoulder plugs opposite the tubes. Plug headers are normally used as they are cheaper than the alternate cover plate design. Cover plate header construction allows total access to header, tube sheet, and tubes. This design is used in high fouling, low pressure service.

Fig. 10-5 shows typical designs for both plug header and cover plate header.

AIR-SIDE CONTROL

Air-cooled exchangers are sized to operate at warm (summer) air temperatures. Seasonal variation of the air temperature can result in over-cooling which may be undesirable. One way to control the amount of cooling is by varying the amount of air flowing through the tube section. This can be accomplished by using multiple motors, 2-speed drives, variable speed motors, louvers on the face of the tube section, or variable pitch fans.

Staging of fans or fan speeds may be adequate for systems which do not require precise control of process temperature or pressure. Louvers will provide a full range of air quantity control. They may be operated manually, or automatically operated by a pneumatic or electric motor controlled from a remote temperature or pressure controller in the process stream. Louvers used with constant speed fans do not reduce fan power requirements.

Auto-variable-pitch fans are normally provided with pneumatically operated blade pitch adjustment which may be controlled from a remote sensor. Blade pitch is adjusted to provide the required amount of air flow to maintain the process temperature or pressure at the cooler. The required blade angle decreases as ambient air temperature drops and this conserves fan power. Hydraulic variable speed drives reduce fan

FIG. 10-5

Typical Construction of Tube Section with Plug and Cover Plate Headers

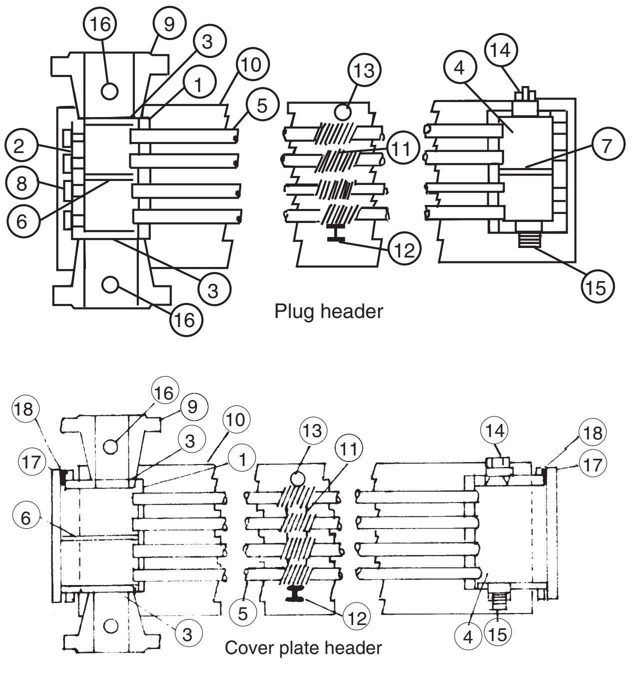

1. Tube sheet
2. Plug sheet
3. Top and bottom plates
4. End plate
5. Tube
6. Manifold
7. Stiffener
8. Plug
9. Nozzle
10. Side frame
11. Tube spacer
12. Tube support cross member
13. Tube keeper
14. Vent
15. Drain
16. Instrument connection
17. Cover plate
18. Gasket

speed when less air flow is required and can also conserve fan power.

A design consideration which might be required for satisfactory process fluid control is co-current flow. In extreme cases of high pour point fluids, no amount of air side control would allow satisfactory cooling and prevent freezing. Co-current flow has the coldest air cool the hottest process fluid, while the hottest air cools the coolest process fluid. This is done in order to maintain a high tube wall temperature. This gives a much poorer LMTD, but for highly viscous fluids is often the only way to prevent freezing or unacceptable pressure drops. With air coolers, the most common method of accomplishing co-current flow is to have the inlet nozzle on the bottom of the header with the pass arrangement upwards. This totally reverses the standard design, and may cause a problem with drainage during shut-downs. In addition, air side control is necessary with co-current designs.

WARM AIR RECIRCULATION

Extreme variation in air temperature, such as encountered in northern climates, may require special air recirculation features. These are needed to provide control of process stream temperatures, and to prevent freezing of liquid streams. Warm air recirculation varies from a standard cooler with one reversing fan to a totally enclosed system of automatic louvers and fans. These two widely used systems are termed “internal recirculation” and “external recirculation.”

A typical layout for internal recirculation is shown in Fig. 10-6. During low ambient operation, the manual fan continues to force air through the inlet half of the section. The auto-variable fan operates in a reversing mode, and draws hot air from the upper recirculation chamber down through the outlet end of the section. Because of the lower recirculation skirt, the manual fan mixes some of the hot air brought down by the auto-variable fan with cold outside air and the process repeats. The top exhaust louvers are automatically adjusted by a temperature controller sensing the process fluid stream. As the fluid temperature rises, the louvers are opened. During design ambient conditions, the louvers are full open and both fans operate in a standard forced draft mode.

A cooler with internal recirculation is a compromise between no recirculation and fully controlled external recirculation. It is cheaper than full external recirculation, and has less static pressure loss during maximum ambient temperature conditions. A cooler with internal recirculation is easier to erect, and requires less plot area than an external recirculation design. However, this latter design is more costly than a cooler with no recirculation, and cannot provide complete freeze protection. Because there is no control over air intake, and fans alone cannot fully mix air, stratified cold air may contact the section. With the fans off, high wind velocity during low ambient conditions could cause excessive cold air to reach the section.

A typical layout for external recirculation is shown in Fig. 10-7. During low ambient temperature conditions, two-speed motors on low speed, or auto-variable fans at low pitch, are normally used. For this design, the sides of the cooler are closed with manual louvers. Over both ends, a recirculation chamber projects beyond the section headers, and provides a duct for mixing cold outside air with warm recirculated air. As with the internal recirculation design, the top exhaust louvers are controlled by the temperature of the process fluid. However, this design provides for control of the inlet air temperature. As the inlet air louver closes, an internal louver in the end duct opens. These adjustments are determined by a controller which senses air temperature at the fan. Once the system reaches equilibrium, it automatically controls process temperature and prevents excessive cooling. During warm weather, the side manual louvers are opened, while close control is maintained by adjustment of the exhaust louvers.

The external recirculation design is preferred for critical control and prevention of freezing. Once operational, it requires little attention. Upon failure of power or air supply, the system closes automatically to prevent freezing. It can be designed to automatically reduce motor energy use when excess cooling is being provided. The main drawback for this type of system is its high cost. Several actuators and control devices are required, along with more steel and louvers. It is usually too large to be shop assembled, and requires more field assembly than an internal system. Because of the need to restrict air intake, this design increases the static pressure, causing greater energy use, and 20-25% larger motors than a standard cooler.

When designing an external recirculation unit, consideration must be given to the plenum depth and duct work to allow air mixing and prevent excessive static pressure loss. The louver intake area should be large enough to keep the air flow below 500 ft/min during maximum design conditions.

FIG. 10-6

Internal Recirculation Design

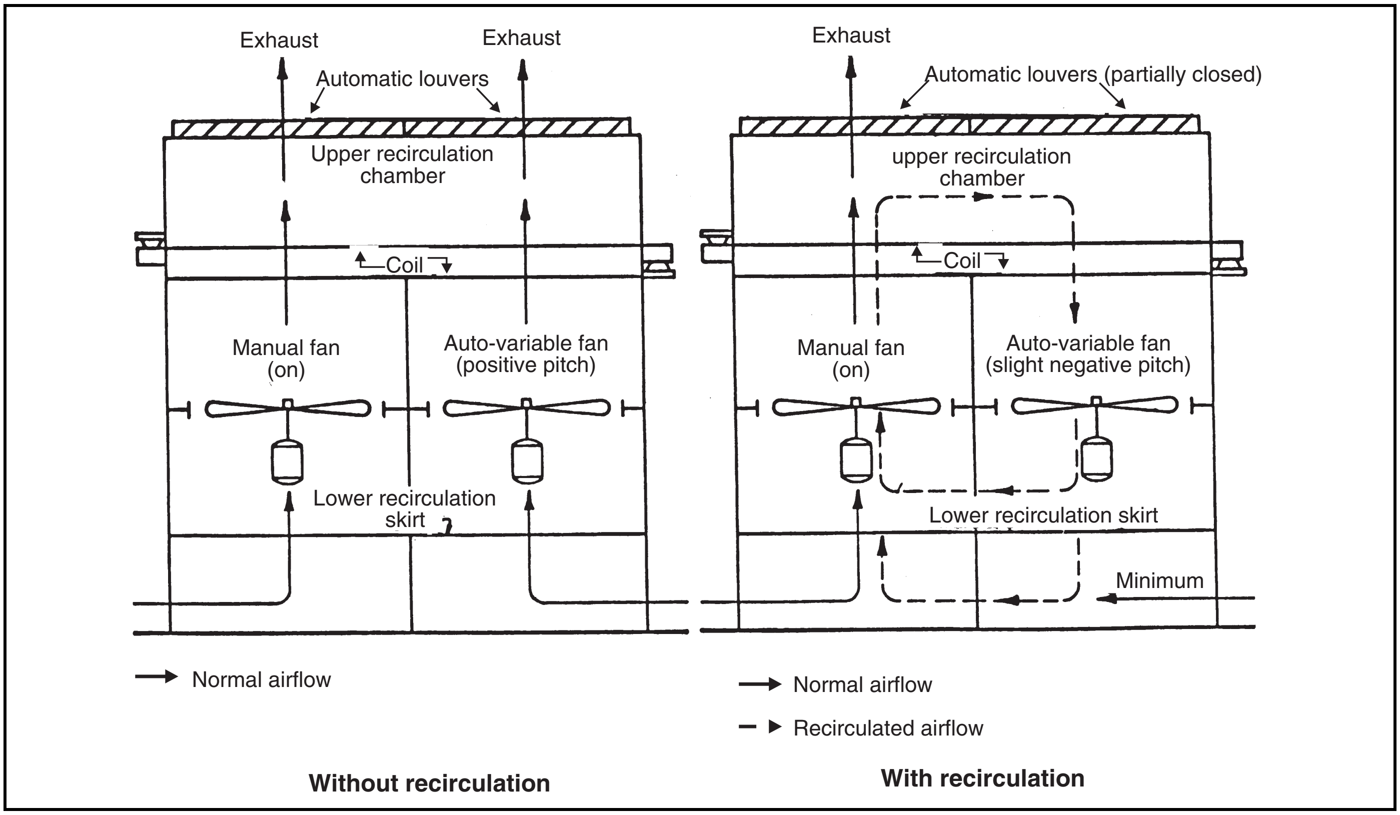

Without recirculation

With recirculation

FIG. 10-7

External Recirculation Design

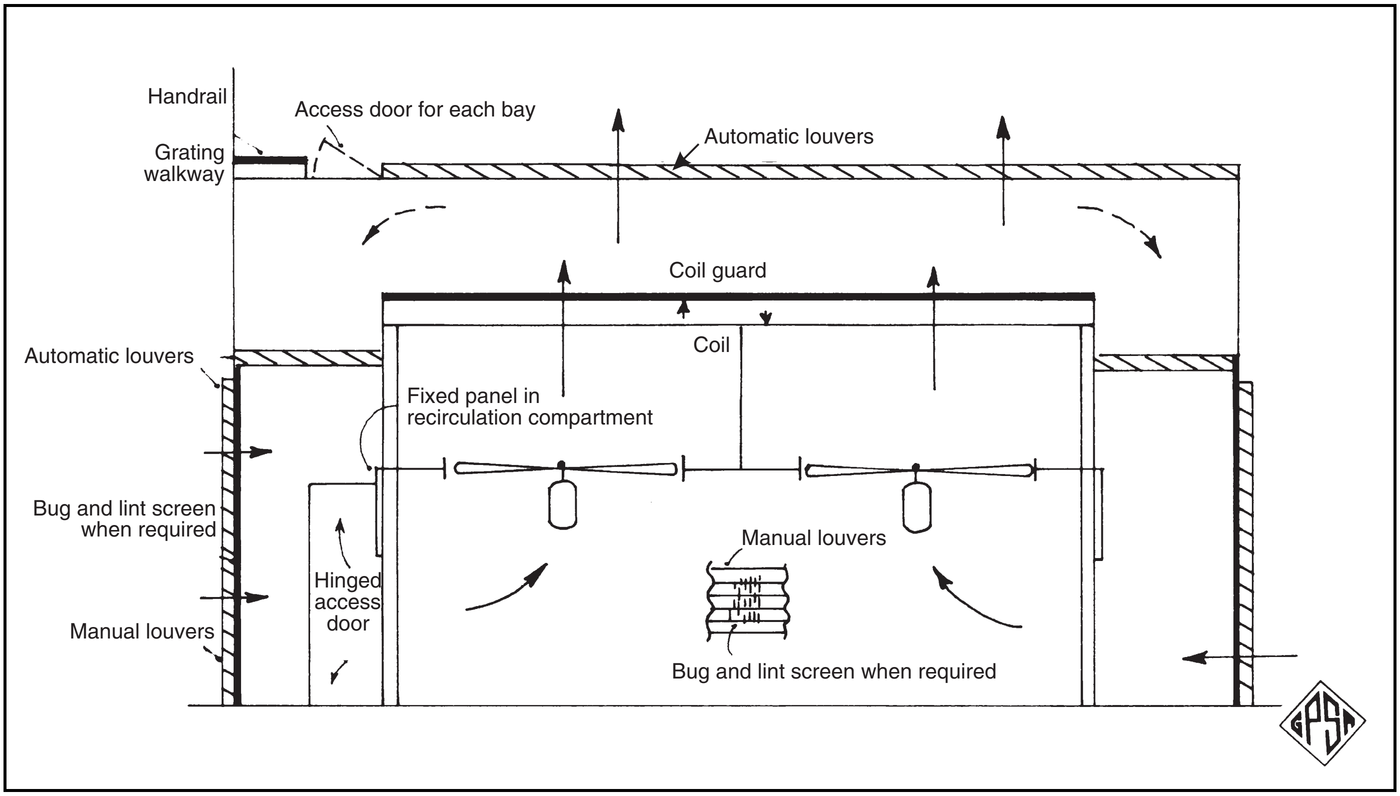

AIR EVAPORATIVE COOLERS

Wet/dry type (air evaporative coolers) air coolers may be a good economical choice when a close approach to the ambient temperature is required. In these systems, the designer can take advantage of the difference between the dry bulb and wet bulb temperatures. There are two general types of air evaporative cooler combinations used although other combinations are possible:

Wet air type — In this type, the air is humidified by spraying water into the air stream on the inlet side of the air cooler. The air stream may then pass through a mist eliminator to remove the excess water. The air then passes over the finned tubes at close to its wet-bulb temperature. If the mist eliminator is not used, the spray should be clean, treated water or the tube/fin type and metallurgy should be compatible with the water.

Wet tube type — An air evaporative cooler may be operated in series with an air cooler if there is a large process fluid temperature change with a close approach to the ambient. The process fluid enters a dry finned tube section and then passes into a wet, plain tube section (or appropriate finned tube section). The air is pulled across the wet tube section and then, after dropping out the excess moisture, passes over the dry tube section.

SPECIAL PROBLEMS IN STEAM CONDENSERS

There are often problems with steam condensers which need special attention at the design stage.

Imploding (collapsing bubbles) or knocking can create violent fluid forces which may damage piping or equipment. These forces are created when a subcooled condensate is dumped into a two-phase condensate header, or when live steam passes into subcooled condensate. This problem is avoided by designing the steam system and controls so that steam and subcooled condensate do not meet in the system.

Non-condensable gas stagnation can be a problem in the air cooled steam condenser any time there is more than one tube row per pass. The temperature of the air increases row by row from bottom to top of the air cooled section. The condensing capacity of each row will therefore vary with each tube row in proportion to the ΔT driving force. Since the tubes are connected to common headers and are subject to the same pressure drop, the vapor flows into the bottom rows from both ends. The non-condensables are trapped within the tube at the point of lowest pressure. The non-condensables continue to accumulate in all but the top rows until they reach the tube outlet. The system becomes stable with the condensate running out of these lower tube rows by gravity. This problem can be eliminated in several ways:

- By assigning only one tube row per pass.
- By connecting the tube rows at the return end with 180° return bends and eliminating the common header.

AIR COOLER LOCATION

Circulation of hot air to the fans of an air cooler can greatly reduce the cooling capacity of an air cooler. Cooler location should take this into consideration.

Single Installations

Avoid locating the air-cooled exchanger too close to buildings or structures in the downwind direction. Hot air venting from the air cooler is carried by the wind, and after striking the obstruction, some of the hot air recycles to the inlet. An induced draft fan with sufficient stack height alleviates this problem, but locating the air cooler away from such obstructions is the best solution.

An air cooler with forced draft fans is always susceptible to air recirculation. If the air cooler is located too close to the ground, causing high inlet velocities relative to the exhaust air velocity leaving the cooler, the hot air recirculation can become very significant. Forced draft coolers are preferably located above pipe lanes relatively high above the ground. Induced draft coolers are less likely to experience recirculation because the exhaust velocities are normally considerably higher than the inlet velocities.

Banks of Coolers

Coolers arranged in a bank should be close together or have air seals between them to prevent recirculation between the units. Mixing of induced draft and forced draft units in close proximity to each other invites recirculation. Avoid placing coolers at different elevations in the same bank.

Avoid placing the bank of coolers downwind from other heat generating equipment.

Since air can only enter on the ends of coolers in a bank, the bank should be located above ground high enough to assure a reasonably low inlet velocity.

The prevailing summer wind direction can have a profound effect on the performance of the coolers. Normally the bank should be oriented such that the wind flows parallel to the long axis of the bank of coolers, and the items with the closest approach to the ambient temperature should be located on the upwind end of the bank.

These generalizations are helpful in locating coolers. The use of Computational Fluid Dynamics to study the effect of wind direction, velocity, obstructions, and heat generating objects should be considered to assure the best location and orientation of air cooled heat exchangers, especially for large installations.

MULTIPLE SERVICE DISCUSSION

If different services can be placed in the same plot area without excessive piping runs, it is usually less expensive to combine them on one structure, with each service having a separate section, but sharing the same fan and motors. Separate louvers may be placed on each service to allow independent control. The cost and space savings makes this method common practice in the air cooler industry.

In designing multiple service coolers, the service with the most critical pressure drop should be calculated first. This is because the pressure drop on the critical item might restrict the maximum tube length that the other services could tolerate. The burden of forcing more than one service into a single tube length increases the possibility of design errors. Several trial calculations may be needed to obtain an efficient design.

After all service plot areas have been estimated, combine them into a unit having a ratio of 2 or 3 to 1 in length to width (assuming a two fan cooler). After assuming a tube length, calculate the most critical service for pressure drop using the assumed number and length of tubes and a single pass. If the drop is acceptable or very close, calculate the critical service completely. Once a design for the most critical service has been completed, follow the same procedure with the next most critical service. After the second or subsequent services have been rated, it is often necessary to lengthen or shorten the tubes or change the overall arrangement. If tubes need to be added for pressure drop reductions in already oversurfaced sections, it might be more cost effective to add a row(s) rather than widen the entire unit. The fan and motor calculations are the same as for a single service unit, except that the quantity of air used must be the sum of air required by all services.

CONDENSING DISCUSSION

The example given covers cooling problems and would work with straight line condensing problems that have the approximate range of dew point to bubble point of the fluid. Where de-superheating or subcooling or where disproportionate amounts of condensing occur at certain temperatures, as with steam and non-condensables, calculations for air coolers should be done by "zones." A heat release curve developed from enthalpy data will show the quantity of heat to be dissipated between various temperatures. The zones to be calculated should be straight line zones; that is, from the inlet temperature of a zone to its outlet, the heat load per degree temperature is the same.

After the zones are determined, an approximate rate must be found for each zone. Do this by taking rates from vapor cooling, condensing, and liquid cooling, then average these based on the percent of heat load for that phase within the zone. Next, calculate the LMTD of each zone. Begin with the outlet zone using the final design outlet temperature and the inlet temperature of that zone. Continue to calculate the zone as if it were a cooler, except that only one pass and one or two rows should be assumed, depending on the percentage of heat load in that zone. In calculating the pressure drop, average conditions may be used for estimating.

If the calculations for zone one (or later a succeeding zone) show a large number of short tubes with one pass, as is usually the case with steam and non-condensables, recalculate the zone with multiple rows (usually four) and short tubes having one pass that uses only a percentage of the total pressure drop allowed. The total cooler will be calculated as if each zone were a cooler connected in series to the next one, except that only tube pressure drops should be calculated for the middle zones. Thus, each zone must have the same number of tubes and true ambient must be used in calculating the LMTD. Only the tube length may vary, with odd lengths for a zone acceptable as long as overall length is rounded to a standard tube length.

If the calculations for zone one (and succeeding zones) fit well into a longer tube length, the LMTD must be weighted. After the outlet zone has been calculated, calculate zone two using the inlet temperature for it and its outlet temperature, which is the inlet temperature of zone one. The "ambient" used to find the zone two LMTD will be the design ambient plus the air rise from zone one. Continue in this manner, always using the previous zone's outlet air temperature in calculating the current zone's LMTD. After the cooler size and configuration have been determined, the fan and motor calculations will be made in the normal manner.

The ultimate pressure drop is the sum of the drops for each zone or approximately the sum of the drop for each phase using the tube length and pass arrangement for each phase. An estimated overall tube side coefficient may be calculated by estimating the coefficient for each phase. Then take a weighted average based on the percentage of heat load for each phase. The total LMTD must be the weighted average of the calculated zone LMTDs.

THERMAL DESIGN

The basic equation to be satisfied is the same as given in Section 9, Heat Exchangers:

$$Q = UA\ \text{CMTD} \qquad \textbf{Eq 10-1}$$

Normally Q is known, U and CMTD are calculated, and the equation is solved for A. The ambient air temperature to be used will either be known from available plant data or can be selected from the summer dry bulb temperature data given in Section 11, Cooling Towers. The design ambient air temperature is usually considered to be the dry bulb temperature that is exceeded less than 5 percent of the time in the area where the installation is required.

A complication arises in calculating the LMTD because the air quantity is a variable, and therefore the air outlet temperature is not known. The procedure given here starts with a step for approximating the air-temperature rise. After the air-outlet temperature has been determined, the corrected LMTD is calculated in the manner described in the shell and tube section, except that MTD correction factors to be used are from Figs. 10-8 and 10-9 which have been developed for the cross-flow situation existing in air-cooled exchangers.

Fig. 10-8 is for one tube pass. It is also used for multiple tube passes if passes are side by side. Fig. 10-9 is for two tube passes and is used if the tube passes are over and under each other. A MTD correction factor of 1.0 is used for four or more passes, if passes are over and under each other. A correction factor of 1.0 may be used as an approximation for three passes, although the factor will be slightly lower than 1.0 in some cases.

The procedure for the thermal design of an air cooler consists of assuming a selection and then proving it to be correct. The typical overall heat transfer coefficients given in Fig. 10-10 are used to approximate the heat transfer area required. The heat transfer area is converted to a bundle face area using Fig. 10-11 which lists the amount of extended surface available per square foot of bundle area for two specific fin tubes on two different tube pitches for 3, 4, 5, and 6 rows. After assuming a tube length, Fig. 10-11 is also used to ascertain the number of tubes. Both the tube side and air side mass velocities are now determinable.

The tube-side film coefficient is calculated from Figs. 10-12 and 10-13. Fig. 10-17 gives the air-side film coefficient based on outside extended surface. Since all resistances must be based on the same surface, it is necessary to multiply the reciprocal of the tube-side film coefficient and tube-side fouling factor by the ratio of the outside surface to inside surface. This results in an overall transfer rate based on extended surface, designated as U_x. The equation for overall heat transfer rate is:

$$\frac{1}{U_x} = \left(\frac{1}{h_t}\right)\left(\frac{A_x}{A_i}\right) + r_{dt}\left(\frac{A_x}{A_i}\right) + r_{mx} + \frac{1}{h_a} \qquad \textbf{Eq 10-2}$$

The basic equation will then yield a heat transfer area in extended surface, A_x, and becomes:

$$Q = (U_x)\,(A_x)\ \text{CMTD}$$

Either method is valid and each is used extensively by thermal design engineers. Fig. 10-10 gives typical overall heat

FIG. 10-8

MTD Correction Factors (1 Pass – Cross Flow, Both Fluids Unmixed)

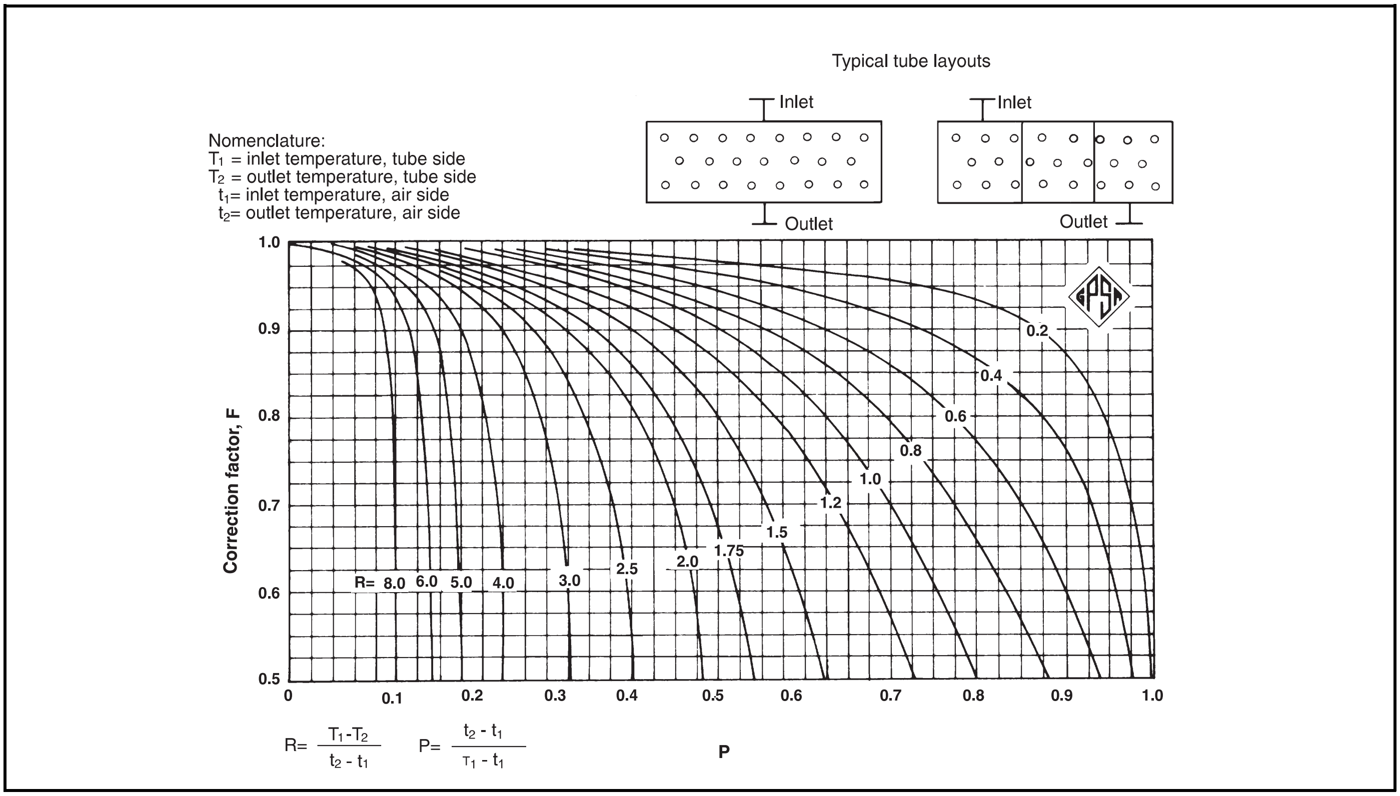

FIG. 10-9

MTD Correction Factors (2 Pass – Cross Flow, Both Fluids Unmixed)

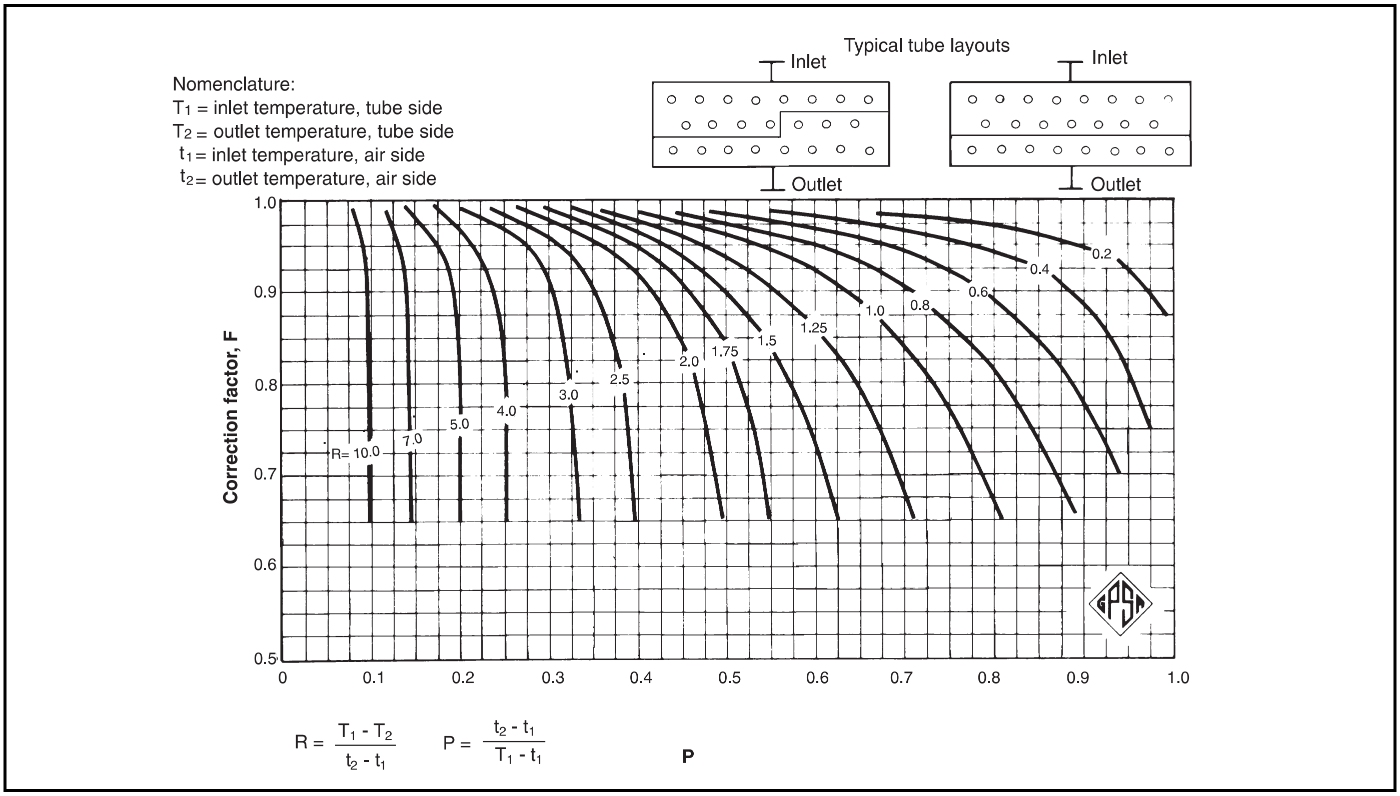

FIG. 10-10

Typical Overall Heat-Transfer Coefficients for Air Coolers

Service	1 in. Fintube			
	½ in. by 9		⅝ in. by 10	
	U_b	U_x	U_b	U_x
1. Water & water solutions				
	(See note below)			
Engine jacket water (r_d = 0.001)	110	7.5	130	6.1
Process water (r_d = 0.002)	95	6.5	110	5.2
50-50 ethylene glycol-water (r_d = 0.001)	90	6.2	105	4.9
50-50 ethylene glycol-water (r_d = 0.002)	80	5.5	95	4.4
2. Hydrocarbon liquid coolers				
Viscosity, cp, at avg. temp.	U_b	U_x	U_b	U_x
0.2	85	5.9	100	4.7
0.5	75	5.2	90	4.2
1.0	65	4.5	75	3.5
2.5	45	3.1	55	2.6
4.0	30	2.1	35	1.6
6.0	20	1.4	25	1.2
10.0	10	0.7	13	0.6
3. Hydrocarbon gas coolers				
Pressure, psig	U_b	U_x	U_b	U_x
50	30	2.1	35	1.6
100	35	2.4	40	1.9
300	45	3.1	55	2.6
500	55	3.8	65	3.0
750	65	4.5	75	3.5
1000	75	5.2	90	4.2
4. Air and flue-gas coolers Use one-half of value given for hydrocarbon gas coolers.				
5. Steam Condensers (Atmospheric pressure & above)				
	U_b	U_x	U_b	U_x
Pure Steam (r_d = 0.0005)	125	8.6	145	6.8
Steam with non-condensibles	60	4.1	70	3.3
6. HC condensers				
Condensing* Range, °F	U_b	U_x	U_b	U_x
0° range	85	5.9	100	4.7
10° range	80	5.5	95	4.4
25° range	75	5.2	90	4.2
60° range	65	4.5	75	3.5
100° & over range	60	4.1	70	3.3
7. Other condensers				
	U_b	U_x	U_b	U_x
Ammonia	110	7.6	130	6.1
Freon 12	65	4.5	75	3.5

Notes: U_b is overall rate based on bare tube area, and U_x is overall rate based on extended surface.

Based on approximate air face mass velocities between 2600 and 2800 lb/(hr·sq ft of face area).

*Condensing range = hydrocarbon inlet temperature to condensing zone minus hydrocarbon outlet temperature from condensing zone.

transfer coefficients based on both extended surface and outside bare surface, so either method may be used. The extended surface method has been selected for use in the example which follows. The air-film coefficient in Fig. 10-17 and the air static pressure drop in Fig. 10-18 are only for 1 in. OD tubes with ⅝ in. high fins, 10 fins per inch on 2¼ in. triangular pitch. Refer to Bibliography Nos. 2, 3, and 5 for information on other fin configurations and spacings.

The minimum fan area is calculated in Step 16 using the bundle face area, number of fans, and a minimum fan coverage of 0.40. The calculated area is then converted to a diameter and rounded up to the next available fan size. The air-side static pressure is calculated from Fig. 10-18 and the fan total pressure is estimated using gross fan area in Step 20. Finally, fan horsepower is calculated in Step 21 assuming a fan efficiency of 70%, and driver horsepower is estimated by assuming a 92%-efficient speed reducer.

Example 10-1 — Procedure for estimating transfer surface, plot area, and horsepower

Required data for hot fluid

Name and phase: 48°API hydrocarbon liquid

Physical properties at avg temp = 200°F

C_p = 0.55 Btu/(lb • °F)

μ = 0.51 cp

k = 0.0766 Btu/[(hr • sq ft • °F)/ft]

(From this Data Book Section 23)

Heat load: Q = 15,000,000 Btu/hr

Flow quantity: W_t = 273,000 lb/hr

Temperature in: T_1 = 250°F

Temperature out: T_2 = 150°F

Fouling factor r_{dt} = 0.001 (hr • sq ft • °F)/Btu

Allowable pressure drop: ΔP_t = 5 psi

Required data for air

Ambient temperature: t_1 = 100°F

Elevation: Sea level (see Fig. 10-16 for altitude correction)

C_{Pair} = 0.24 Btu/(lb • °F)

Basic assumptions

Type: Forced draft, 2 fans

Fintube: 1 in. OD with ⅝ in. high fins

Tube pitch: 2 ½ in. triangular (Δ)

Bundle layout: 3 tube passes, 4 rows of tubes, 30 ft long tubes

First trial

1. Pick approximate overall transfer coefficient from Fig. 10-10. U_x = 4.2

FIG. 10-11

Fintube Data for 1-in. OD Tubes

Fin Height by Fins/inch	½ in. by 9		⅝ in. by 10		
APF, sq ft/ft	3.80		5.58		
AR, sq ft/sq ft	14.5		21.4		
Tube Pitch	2 in. Δ	2¼ in. Δ	2¼ in. Δ	2⅜ in. Δ	2½ in. Δ
APSF (3 rows)	68.4	60.6	89.1	84.8	80.4
(4 rows)	91.2	80.8	118.8	113.0	107.2
(5 rows)	114.0	101.0	148.5	141.3	134.0
(6 rows)	136.8	121.2	178.2	169.6	160.8

Notes: APF is total external area/ft of fintube in sq ft/ft. AR is the area ratio of fintube compared to the exterior area of 1 in. OD bare tube which has 0.262 sq ft/ft. APSF is the external area in sq ft/sq ft of bundle face area.

2. Calculate approximate air temperature rise

$$\Delta t_a = \left(\frac{U_x + 1}{10}\right)\left(\frac{T_1 + T_2}{2} - t_1\right)$$

$$\Delta t_a = \left(\frac{4.2 + 1.0}{10}\right)\left(\frac{250 + 150}{2} - 100\right) = 52°F$$

3. Calculate CMTD

$$\begin{array}{lccc} \text{Hydocarbon} & 250 & \rightarrow & 150 \\ \text{Air} & \underline{152} & \leftarrow & \underline{100} \\ & 98 & & 50 \end{array}$$

LMTD = 71.3°F (see Fig. 9-3)

CMTD = (71.3) (1.00) = 71.3°F
(3 tube passes assumed)

4. Calculate required surface

$$A_x = \frac{Q}{(U_x)\ (\text{CMTD})}$$

$$A_x = \frac{15{,}000{,}000}{(4.2)\ (71.3)} = 50{,}090 \text{ sq ft}$$

5. Calculate face area using APSF factor from Fig. 10-11

$$F_a = \frac{A_x}{\text{APSF}}$$

$$F_a = \frac{50{,}090}{107.2} = 467 \text{ sq ft (4 rows assumed)}$$

6. Calculate unit width with assumed tube length

$$\text{Width} = \frac{F_a}{L}$$

$$\text{Width} = \frac{467}{30} = 15.57 \text{ ft}$$

For simplification round this answer to 15.5, thus F_a = 465 (30-ft-long tubes assumed)

7. Calculate number of tubes using APF factor from Fig. 10-11

$$N_t = \frac{A_x}{(\text{APF})\ (L)}$$

8. Calculate tube-side mass velocity from assumed number of passes and reading A_t from Fig. 9-25 for a 1 in. OD x 16 BWG tube

A_t = 0.5945 sq in.

$$G_t = \frac{(144)\ (W_t)\ (N_p)}{(3600)\ (N_t)\ (A_t)}$$

$$G_t = \frac{(0.04)\ (273{,}000)\ (3)}{(299)\ (0.5945)} = 184 \text{ lb/(ft}^2 \bullet \text{sec)}$$

9. Calculate modified Reynolds number

$$N_R = \frac{(D_i)\ (G_t)}{\mu} = \frac{(0.87)\ (184)}{0.51} = 314$$

10. Calculate tube-side pressure drop using equation from Fig. 10-14 and from Fig. 10-15

$$\Delta P_t = \frac{fYLN_p}{\phi} + BN_p$$

$$\Delta P_t = \frac{(0.0024)\ (14.5)\ (30)\ (3)}{0.96} + (0.25)\ (3) = 4.0 \text{ psi}$$

(ϕ is a difficult function to calculate rigorously, see Fig. 10-19)

11. Calculate tube-side film coefficient using equation from Fig. 10-13 and

$$k\left(\frac{C_p\mu}{k}\right)^{1/3} \text{ from Fig. 10-12}$$

$$h_t = \frac{Jk\left(\frac{C_p\mu}{k}\right)^{1/3}\phi}{D_i} = \frac{(1900)\ (0.12)\ (0.96)}{0.87} = 252$$

12. Calculate air quantity

$$W_a = \frac{Q}{(0.24)\ (\Delta t_a)}$$

$$W_a = \frac{15{,}000{,}000}{(0.24)\ (52)} = 1{,}200{,}000 \text{ lb/hr}$$

13. Calculate air face mass velocity

$$G_a = \frac{W_a}{F_a} = \text{lb/(hr} \bullet \text{sq ft of face area)}$$

$$G_a = \frac{1{,}200{,}000}{465} = 2{,}581$$

14. Read air-side film coefficient from Fig. 10-17

h_a = 8.5

15. Calculate overall transfer coefficient

FIG. 10-12

Physical Property Factor for Hydrocarbon Liquids

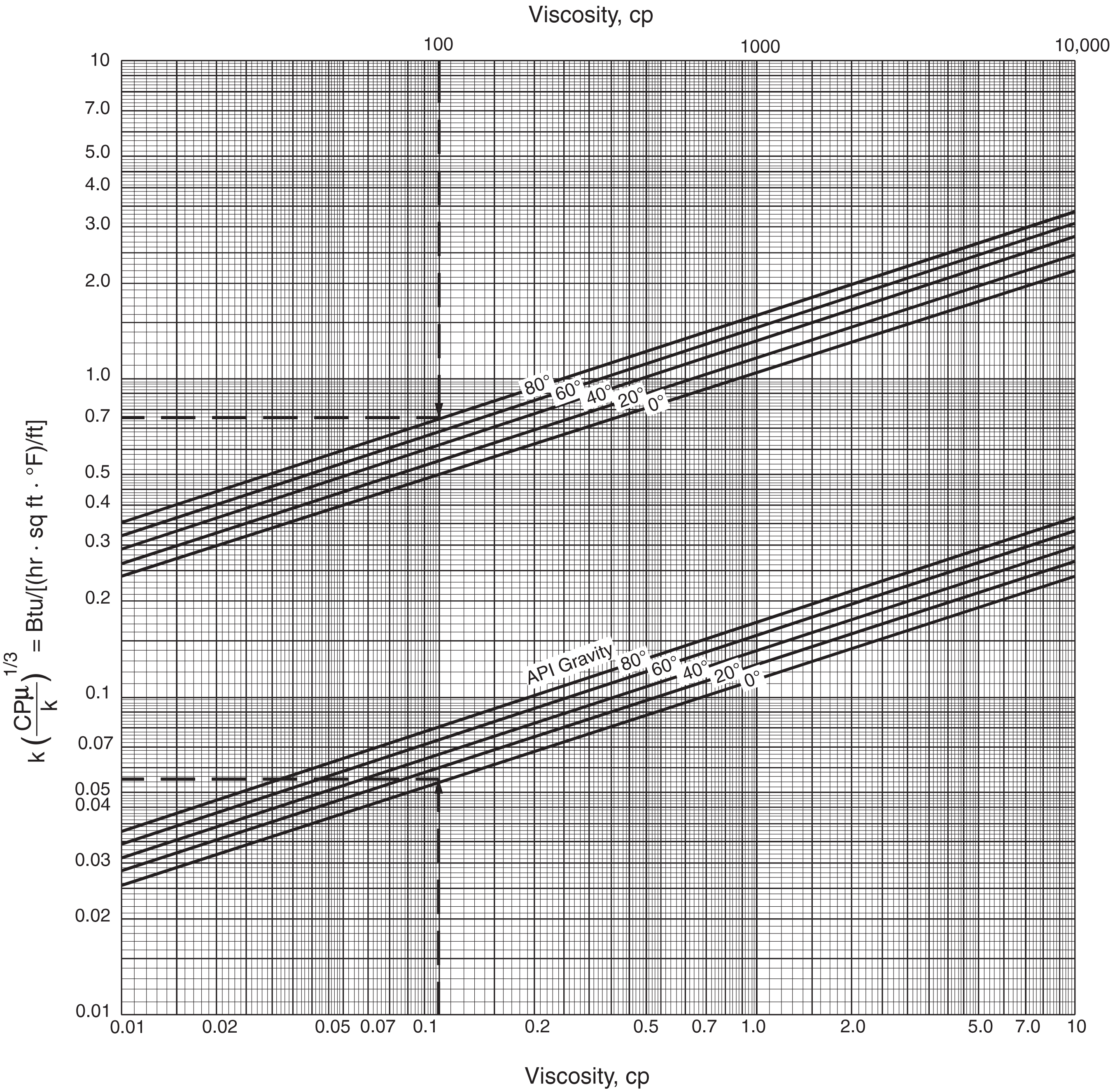

FIG. 10-13

J Factor Correlation to Calculate Inside Film Coefficient, h_t

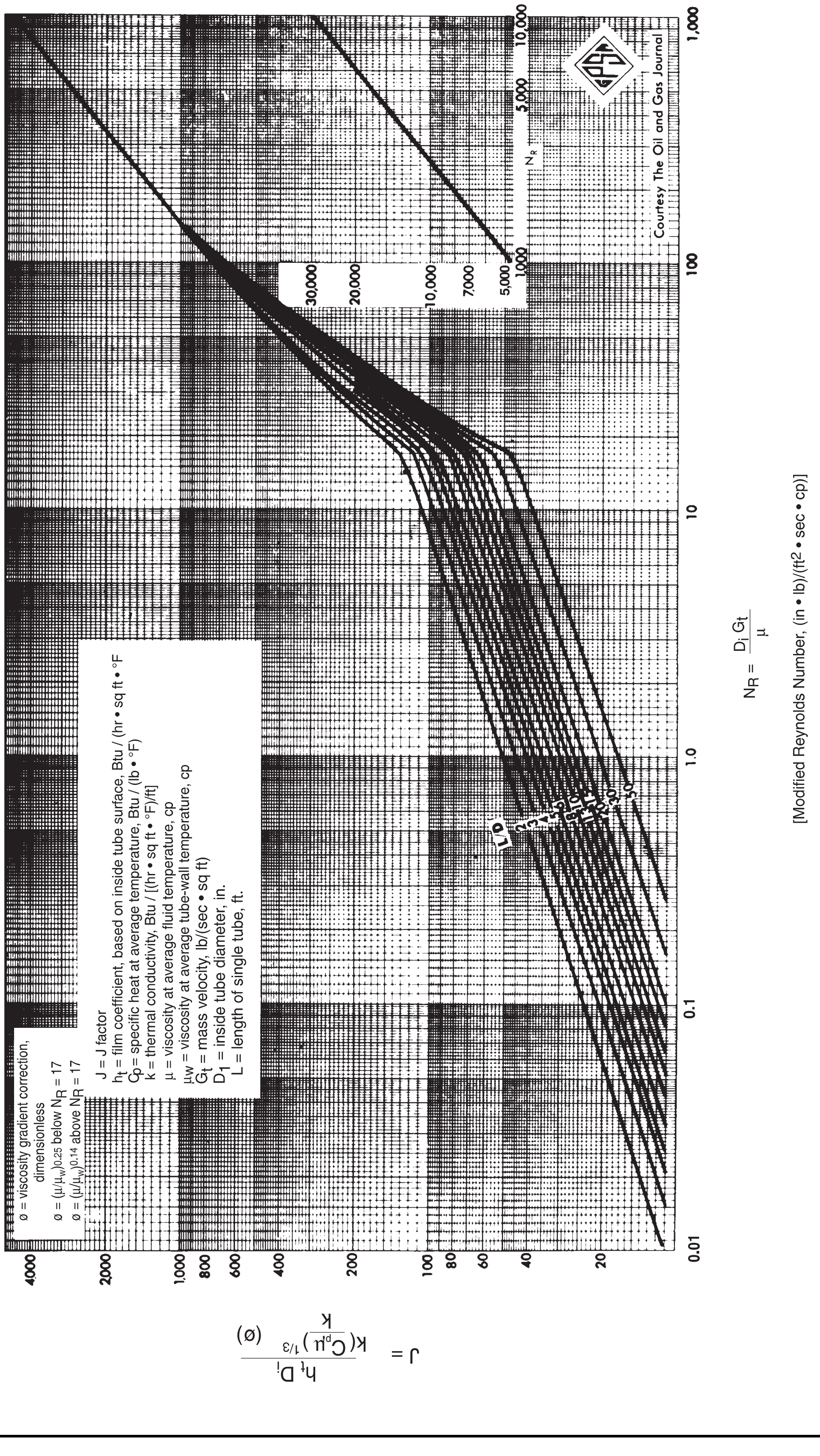

ø = viscosity gradient correction, dimensionless

ø = $(\mu/\mu_w)^{0.25}$ below $N_R = 17$

ø = $(\mu/\mu_w)^{0.14}$ above $N_R = 17$

J = J factor

h_t = film coefficient, based on inside tube surface, Btu / (hr • sq ft • °F

C_p = specific heat at average temperature, Btu / (lb • °F)

k = thermal conductivity, Btu / [(hr • sq ft • °F)/ft]

μ = viscosity at average fluid temperature, cp

μ_w = viscosity at average tube-wall temperature, cp

G_t = mass velocity, lb/(sec • sq ft)

D_1 = inside tube diameter, in.

L = length of single tube, ft.

Courtesy The Oil and Gas Journal

FIG. 10-14

Pressure Drop for Fluids Flowing Inside Tubes

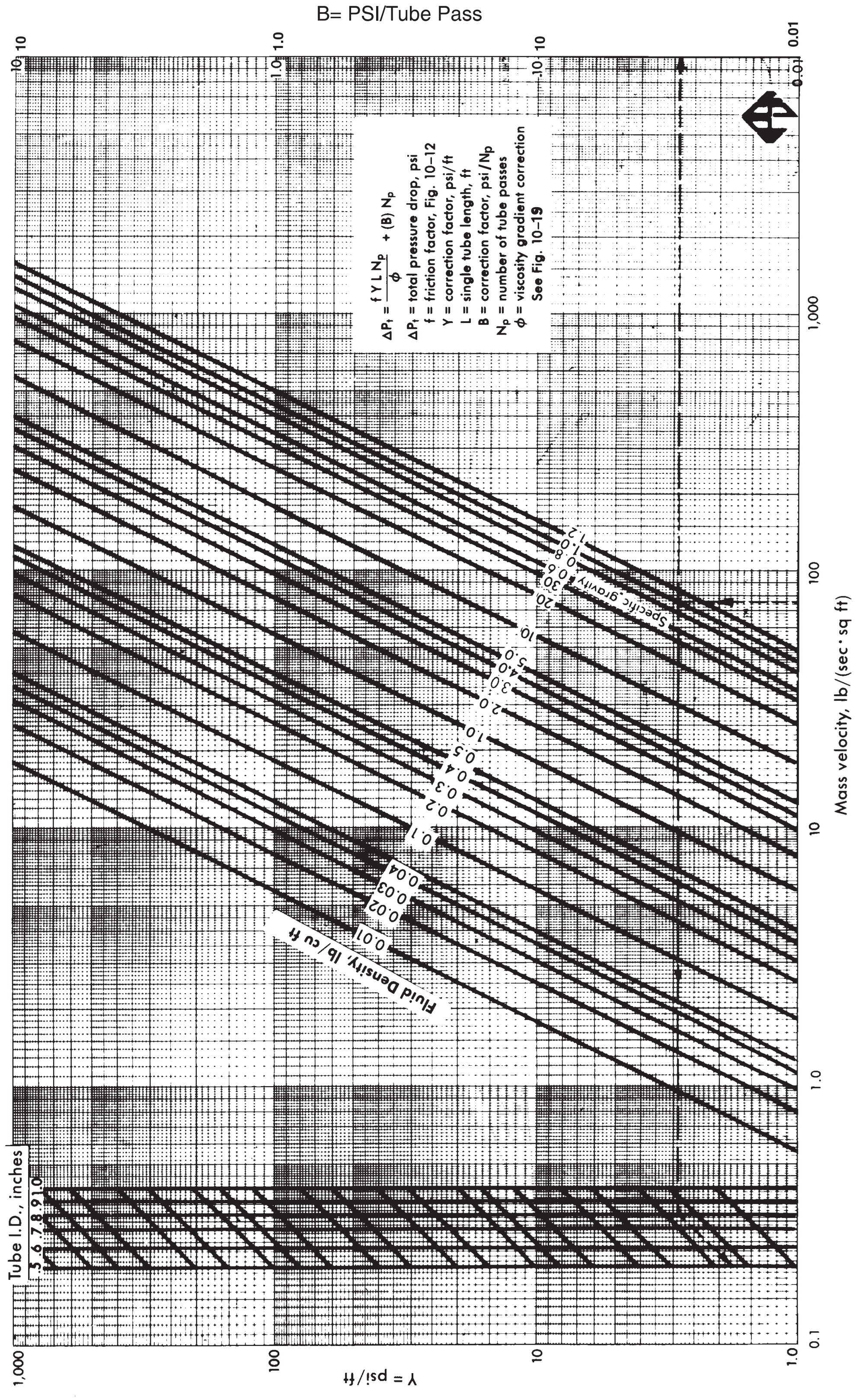

$$\frac{A_x}{A_i} = \frac{(AR)\,(D_o)}{D_i}$$

$$\frac{A_x}{A_i} = \frac{(21.4)\,(1.0)}{0.87} = 24.6$$

$$\frac{1}{U_x} = \left(\frac{1}{h_t}\right)\left(\frac{A_x}{A_i}\right) + r_{dt}\left(\frac{A_x}{A_i}\right) + r_{mx} + \frac{1}{h_a}$$

$$\frac{1}{U_x} = \left(\frac{1}{252}\right)(24.6) + (0.001)\,(24.6) + \frac{1}{8.5}$$

$$U_x = 4.17$$

(r_{mx} is omitted from calculations, since metal resistance is small compared to other resistances)

Second and subsequent trials. If U_x calculated in Step 15 is equal or slightly greater than U_x assumed in Step 1, and calculated pressure drop in Step 9 is within allowable pressure drop, the solution is acceptable. Proceed to Step 16. Otherwise, repeat Steps 1-15 as follows:

1. Assume new U_x between value originally assumed in Step 1 and value calculated in Step 15.
2. Adjust Δt_a by increasing Δt_a if calculated U_x is higher than assumed U_x, or decreasing Δt_a if calculated U_x is lower than assumed U_x.

3.-15. Recalculate values in Steps 3-15 changing assumed number of passes in Steps 3 and 8, and tube length in Step 6, if necessary to obtain a pressure drop as calculated in Step 9 as high as possible without exceeding the allowable.

16. Calculate minimum fan area.

$$\text{Fan area/fan} = \text{FAPF} = \frac{(0.40)\,(F_a)}{(N_f)}$$

$$\text{FAPF} = \frac{(0.40)\,(465)}{2} = 93\ \text{ft}^2\ \text{(2 fans assumed)}$$

17. Fan diameter $= [4\,(\text{FAPF})/\pi]^{0.5} = [4\,(93)/3.1416]^{0.5}$

$= 11$ ft (rounded up)

18. Calculate air static pressure drop using F_p from Fig. 10-18 and D_R at avg air temp from Fig. 10-16.

$$T_a,\ \text{avg} = \frac{100°\text{F} + 152°\text{F}}{2} = 126°\text{F}$$

$$\Delta P_a = \frac{(F_p)\,(N)}{(D_R)}$$

$$\Delta P_a = \frac{(0.10)\,(4)}{0.90} = 0.44\ \text{inches of water}$$

19. Calculate actual air volume using D_R of air at fan inlet.

$$t_1 = 100°\text{F}$$

$$\text{ACFM} = \frac{W_a}{(D_R)\,(60)\,(0.0749)}$$

$$\text{ACFM} = \frac{1{,}200{,}000}{(0.94)\,(60)\,(0.0749)} = 284{,}000\ \text{Total}$$

or 142,000 / Fan

20. Approximate fan total pressure using D_R of air at fan and fan area.

$$\text{PF} = \Delta P_a + \left[\frac{\text{ACFM}}{4005\left(\frac{\pi D^2}{4}\right)}\right]^2 (D_R)$$

$$\text{Where:}\quad 4005 = \sqrt{\frac{2\,g\,\rho_w\,(3600)}{\rho_a \bullet 12}}\ \text{at } 70°\text{F}$$

$$\text{PF} = 0.44 + \left(\frac{142{,}000}{(4005)\,(0.785)\,(11^2)}\right)^2 (0.94)$$

$$= 0.57\ \text{inches of water}$$

21. Approximate brake horsepower per fan, using 70% fan efficiency.

$$\text{bhp} = \frac{(\text{ACFM/fan})\,(\text{PF})}{(6356)\,(0.70)}$$

Where the conversion factor

$$6356 = \left(\frac{33{,}000\ \text{ft–lb}}{\text{min} \bullet \text{hp}}\right)\left(\frac{12\ \text{in.}}{\text{ft}}\right)\left(\frac{\text{ft}^3}{62.3\ \text{lb}}\right)$$

Note: 62.3 is the weight of one cubic foot of water at 60°F.

$$\text{bhp} = \frac{(142{,}000)\,(0.57)}{(6356)\,(0.70)} = 18.2$$

Actual fan motor needed for 92% efficient speed reducer is 18.2/0.92 = 19.8 hp. For this application, 20 hp drivers would probably be selected.

Solution:

(15.5 ft) (30 ft) = 465 sq ft

(465 sq ft) (APSF) = extended surface area

(465) (107.2) = 49,848 sq ft

Therefore, one unit having 49,848 sq ft of extended surface, two 11 ft diameter fans, and two 20 hp fan drivers, is required.

Fig. 10-20 has been included to aid the air cooler designer in choosing the proper pressure for the air density calculation at elevations higher than sea level.

MAINTENANCE AND INSPECTION

Attention to the design of the air cooler, and the choice of materials, is essential to provide low maintenance operation. Major factors to be considered are atmospheric corrosion, climatic conditions, and temperature cycling of fluid being cooled.

Scheduled preventive maintenance and inspection is the key to trouble-free air cooler operation. A check of all fans for vibration should be made regularly. At the first sign of undue vibration on a unit, the unit should be shut down at the earliest opportunity for thorough examination of all moving parts. A semi-annual inspection and maintenance program should:

- Check and replace worn or cracked belts.
- Inspect fan blades for deflection and for cracks near hubs.
- Grease all bearings.
- Change oil in gear drives.

FIG. 10-15

Friction Factor for Fluids Flowing Inside Tubes

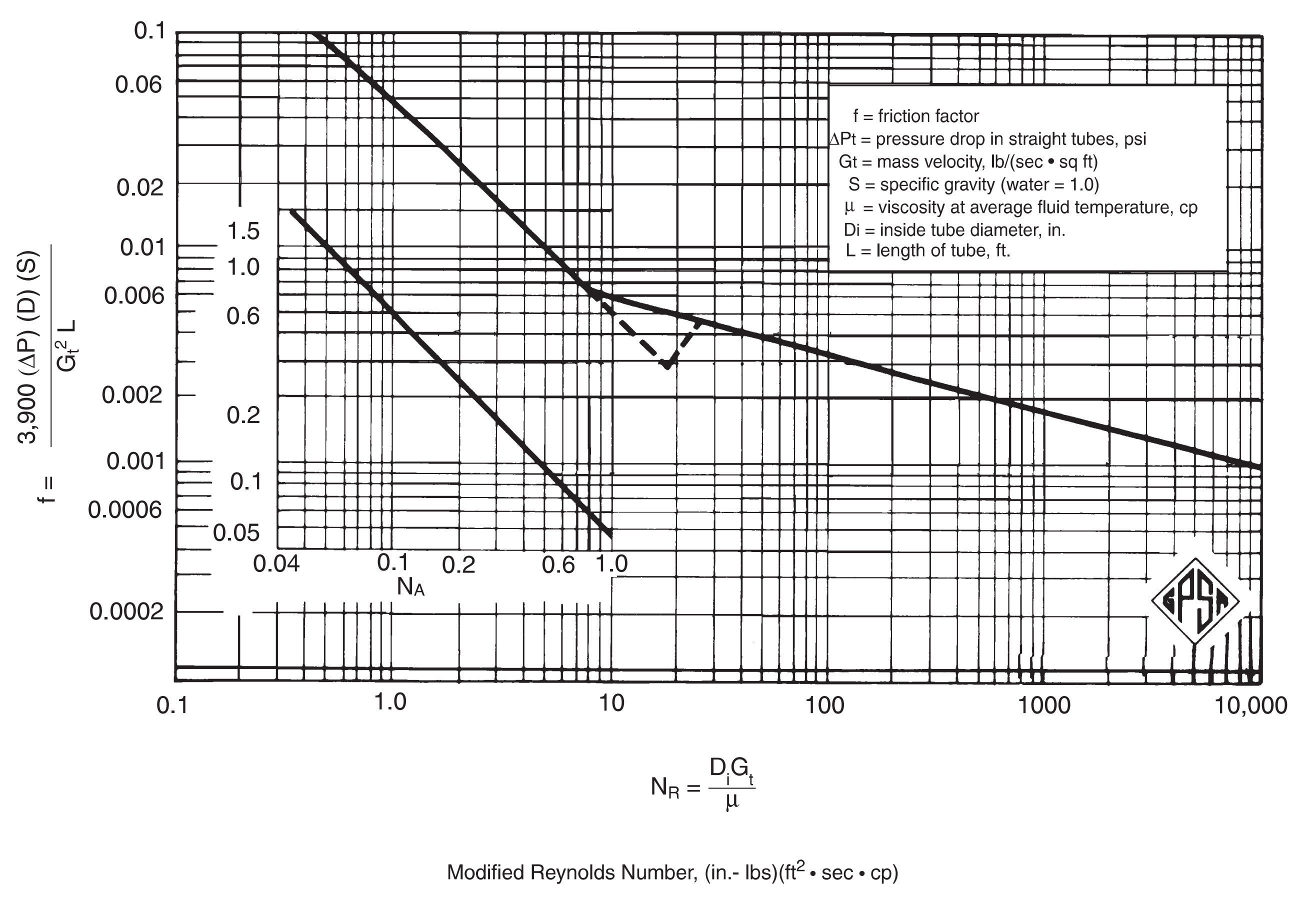

FIG. 10-16

Air-Density Ratio Chart

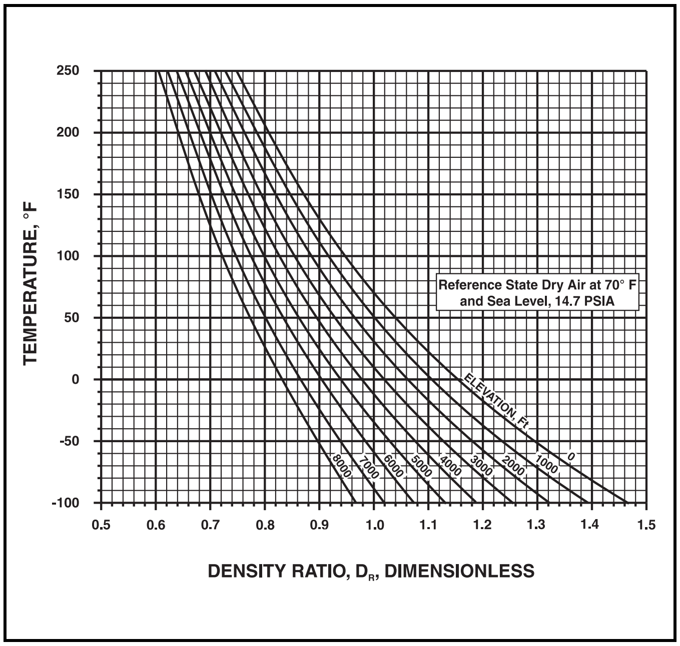

FIG. 10-17

Air Film Coefficient

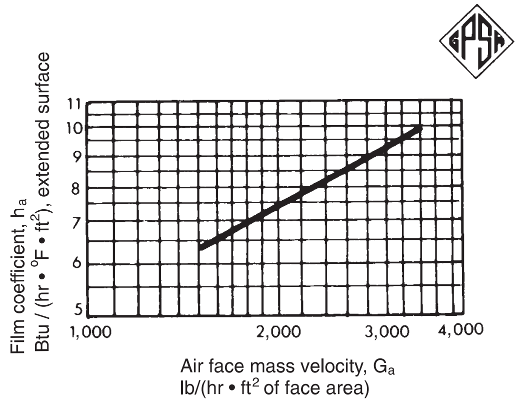

Note: Figs 10-17 and 10-18 apply only to 1 in. OD, 5/8 in. high, 10 fpi, 2 1/2 in. Δ pitch fintube banks.

- Check the inside of tube section for accumulation of grease, dirt, bugs, leaves, etc., and schedule cleaning before tubes become packed with such debris.

NOISE CONSIDERATIONS

Fan noise can be elusive requiring sophisticated equipment to measure accurately. Fan noise control must begin at the air-cooled heat exchanger design stage. Noise control, as an after thought, can result in a very costly fan and drive component retrofit, and possible addition of heat transfer surface or acoustic barriers. Acoustic barriers may increase the pressure drop the fan must overcome; hence, bigger fans and more horsepower will be required.

FIG. 10-18

Air Static-Pressure Drop

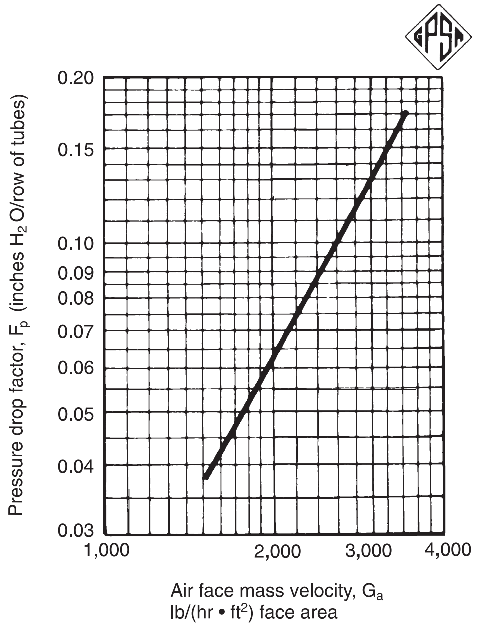

FIG. 10-19

Correction Factor for Fluid Viscosity Within the Tubes

Correction factor * when $\varphi = \left(\frac{\mu}{\mu_w}\right)^{0.14}$ (See Fig. 10-15)

	Correction Factor, ϕ
1. Hydrocarbon vapor; steam; water	1.0
2. Hydrocarbon liquids (18 to 48 API), MEA/DEA solutions	0.96
3. Water/glycol solutions; heat transfer fluids	0.92
4. Lube oils; heavy petroleum fractions (10 to 18 API)	0.85

* When $N_r < 17$, $\varphi = \left(\frac{\mu}{\mu_w}\right)^{0.25}$ A Reynolds number of less than 17 is only likely for lube oils or heavy petroleum fractions. The minimum recommended value of ϕ to use in Step 10 is 0.80, even though the calculated value may be lower.

Since noise (Sound Pressure Level) is a function of tip speed, slowing fan rotation can reduce noise.

Unfortunately, a fan's pressure capability decreases with the square of the speed. Therefore, the fan's pressure capability must increase to maintain the required airflow.

To increase the pressure capability of a fan, the fan's solidity ratio must be increased, by adding more blades, or using blades with a wider chord, such as a low-noise blade design. Unfortunately, increasing the number of blades can reduce fan efficiency.

Noise requirements are often more restrictive at night. If this is a consideration, slowing the fan as ambient temperature drops using a variable-speed drive can be one solution to reducing noise. As the nighttime ambient temperature drops, required airflow is reduced, therefore fan speed may be slowed to lower noise levels.

Noise-Related Nomenclature

Decibel:

A number representing relative sound intensity expressed with respect to a reference pressure or power level. The usual reference for sound pressure level is of 20 micro newtons per square meter (20 μ/m^2). A decibel is a logarithm (base 10) of a ratio of the power values abbreviated "dB".

Frequency:

Sound vibration rate per second in Hertz (cycles per second).

Low-Noise Fans:

A fan able to operate at low speed due to its high-pressure capability. Fan pressure capability is a function of its solidity ratio. Therefore, a low-noise fan will generally have more or wider blades than would be required if the fan operated at normal tip speeds.

Octave Bands:

Noise is categorized by dividing it into separate frequency bands of octaves or 1/3 octaves. Generally, 63, 125, 250, 500, 1K, 2K, 4K and 8K center frequencies are used to define noise bands in Hertz (cycles/sec).

Sound Power Level:

Acoustical power (energy) can be expressed logarithmically in decibels with respect to a reference power, usually 10^{-12} watts. The relationship is given as: Sound Power Level.

$$PWL = 10 \log \left(\frac{W}{10^{-12}\, watts}\right) \qquad \textbf{Eq 10-3}$$

Sound power level cannot be measured directly but must be calculated from sound pressure levels (SPL) dB. In metric terms, this is known as Lw.

Sound pressure level, known as SPL, or Lp in metric terminology, is the audible noise given in decibels that relates to intensity at a point some distance from the noise source. It can be related to octave bands or as an overall weighted level dB(A).

Weighted sound levels relate the decibel (loudness) to a frequency. Ears can easily pick up high-frequency noises (both intensity and direction) but are relatively insensitive to low-frequency noise. For a stereo system high-frequency speakers must be very carefully located in a room for best results, but low-frequency bass speakers can be placed anywhere, even out of sight.

There are three basic weighting systems: A, B and C. The "A" system, dB(A), most closely relates to our ear, the "B" sys-

FIG. 10-20

Altitude and Atmospheric Pressures[8]

Altitude above Sea Level		Barometer		Atmospheric Pressure	
meters	**feet**	**mm Hg abs.**	**in Hg abs.**	**kPa (abs)**	**psia**
0	0	760.0	29.92	101.325	14.696
153	500	746.3	29.38	99.49	14.43
305	1000	733.0	28.86	97.63	14.16
458	1500	719.6	28.33	95.91	13.91
610	2000	706.6	27.82	94.18	13.66
763	2500	693.9	27.32	92.46	13.41
915	3000	681.2	26.82	90.80	13.17
1068	3500	668.8	26.33	89.15	12.93
1220	4000	656.3	25.84	87.49	12.69
1373	4500	644.4	25.37	85.91	12.46
1526	5000	632.5	24.90	84.32	12.23
1831	6000	609.3	23.99	81.22	11.78
2136	7000	586.7	23.10	78.19	11.34
2441	8000	564.6	22.23	75.22	10.91
2746	9000	543.3	21.39	72.39	10.50
3050	10 000	522.7	20.58	69.64	10.10

Reprinted with permission of John M. Campbell and Company.

tem, dB(B), has some specific uses and the "C" system, dB(C), is considered unweighted.

The dB(A) is the most common weighting system. It expresses sound levels with a single number instead of having to specify the noise of each octave band.

Note that the sound range of ACHEs (at close range) is typically between 80 and 105 dB(A).

ACHE Noise

Whether the concern is for overall plant noise or the noise exposure of plant workers in the vicinity of the fans, a different type of noise specification must be used.

Overall, noise limitations from an ACHE are typically a sound power level (PWL) specification for each unit. This limits the contribution of each unit (typically two fans) to the plant noise as a whole. This is usually needed where noise at the plant boundary is considered. Contributions of each part of the plant must be carefully controlled if overall plant noise is limited. PWLs can be expressed as weighted level dB(A) or sometimes even by limitations on each octave band.

If worker protection is the main concern, a limitation of sound pressure level at 3 ft or 1 m below the bundle will probably be imposed as "SPL dB(A) at 3 ft". The OSHA limitation is 90 dB(A) for eight-hour exposure, but 85 dB(A) down to 80 dB(A) is not uncommon.

Predicting Fan Noise

Each fan manufacturer has proprietary equations for predicting fan noise. API Guidelines use the general formula:

$$PWL = 56 + 30 \log \left(\frac{FPM}{1000}\right) + \log HP \qquad \textbf{Eq 10-4}$$

This calculates PWL as dB(A)

Proprietary noise equations are based on actual tests at various speeds and operating conditions considering the following effects:

- Fan diameter
- Fan tip speed
- Blade Type
- Blade pitch angle
- Inlet conditions
- Horsepower

Note: Logs are common logs (base 10).

For example:

14 ft fan

237 RPM (10,424 FPM tip speed)

25.1 HP

Find sound power level

$PWL = 56 + 30 \log 10.4 + \log 25.1$

$= 100.5$ dB(A)

- When considering multiple noise sources (fans) use the relation:

$$PWL_N = PWL + 10 \log N \qquad \textbf{Eq 10-5}$$

The sound power level for 2 adjacent fans is the PWL of one fan plus 10 log 2 or $PWL_2 = PWL + 3$.

A doubling of the noise source adds 3 dB.

- Noise attenuates with distance by the equation:

$$SPL \text{ (at distance R)} = PWL - 20 \log R \qquad \textbf{Eq 10-6}$$

Where R is in feet from the center of the source. Measure R as a "line of sight" distance.

Consider the noise an observer at grade hears at 50 ft from an operating ACHE with the fan on and the line-of-sight distance from grade to the center of the fan is actually 62 ft. Remember what the ear hears is SPL, the noise energy is PWL.

Assume PWL = 100.5 dB(A).

SPL = 100.5 - 20 log 62 = 64.7 dB(A)

This also assumes background noise is at least 10 dB quieter.

Note: If both fans were running, the SPL would have been 67.7 dB(A).

When considering the noise at 3 ft beneath the unit, the drive system and motor noise become dominant at lower tip speeds.

Factors that influence this noise are:

- Motor noise
- Belt or gear noise
- Bearing noise
- Reflected noise from supports
- Background noise

Gear noise is especially significant in a forced draft unit.

Noise Testing

Frequently, the ACHE must be tested for confirmation that its noise does not exceed specifications imposed by the purchaser. There are two basic types of tests normally performed before shipment:

a) Measure SPL dB(A) (Sound Pressure Level) at "3 ft below the bundle or fan guard" — depending on whether the unit is induced or forced draft.

b) Measure PWL (Sound Power Level) using "hemispherical power level test." PWL is specified as either a dB(A) weighted value or by octave bands.

The "SPL at 3 ft" test is by far the most common and least expensive. Usually, only one or two measurements are required. The answer is immediate and read directly from the noise meter.

The hemispherical test is far more complicated and expensive. Several hours, many technicians and a large crane are required to perform this test. Full details of the test are given in API Recommended Practice 631 M, June, 1981.[7]

REFERENCES

1. A.P.I. Standard 661, "Air Cooled Heat Exchangers for General Refinery Services."
2. Briggs, D. E., Young, E. H., "Convection Heat Transfer and Pressure Drop of Air Flowing Across Triangular Pitch of Tubes," Chemical Engineering Progress Symposium Series, Volume 59, No. 41, 1963.
3. Cook, E. M., "Air Cooled Heat Exchangers," Chemical Engineering, May 25, 1964, p. 137; July 6, 1964, p. 131; and August 3, 1964, p. 97.
4. Gardner, K. A., "Efficiency of Extended Surfaces," Trans ASME, Volume 67, 1945, pp. 621-631.
5. Robinson, K. K., Briggs, D. E., "Pressure Drop of Air Flowing Across Triangular Pitch Banks of Finned Tubes," Chemical Engineering Progress Symposium Series, Volume 62, No. 64, 1966.
6. Rubin, Frank L., "Winterizing Air Cooled Heat Exchangers," Hydrocarbon Processing, October 1980, pp. 147-149.
7. API Standard 631 M, First Edition, "Measurement of Noise from Air-Cooled Heat Exchangers," June, 1981.
8. John M. Campbell Co. "Gas Conditioning and Processing, Vol. 2," Eighth Edition.

SECTION 11

Cooling Towers

INTRODUCTION

The purpose of this section is to provide a basic understanding of the design and operation of a cooling tower. A cooling tower allows water to be cooled by ambient air through evaporation.

COOLING TOWER PSYCHROMETRICS

Psychrometry is the study of cooling by evaporation. Maximum evaporation takes place when water, in the form of tiny droplets, is exposed to the maximum air flow for the longest possible time. The process of evaporation through removal of

FIG. 11-1

Nomenclature

Acfm = actual volumetric flow rate of air-vapor mixture, cu ft/min
ahp = air horsepower, hp
AWB = ambient wet bulb temperature, °F
B = combined water loss through blowdown and windage, % of circulating water or cu ft/min
CWT = cold water temperature, °F
DB = dry bulb temperature, °F
E = water evaporated, % of circulating water or cu ft/min
gpm = gallons per minute
G = air rate, lb/(sq ft • hr)
h_a = specific enthalpy of dry air, BTU/lb
h_{as} = $h_s - h_a$, BTU/lb
h_s = enthalpy of moist air at saturation per lb of dry air, BTU/lb
HWT = hot water temperature, °F
lb_a = pounds of dry air
lb_w = pounds of water
L = water rate, lb/(sq ft • hr)
LG = liquid to gas ratio, lb/lb
Q = cu ft/min
PF = performance factor, dimensionless
R = cooling tower range, °F
V = air velocity, ft/min
v_a = specific volume of dry air, cu ft/lb
v_{as} = $v_s - v_a$, cu ft/lb
v_s = volume of moist air at saturation per lb of dry air, cu ft/lb
Ws = lb_w/lb_a, humidity ratio at saturation
WB = wet bulb temperature, °F

Cold Water Temperature: Temperature of the water leaving the collection basin, exclusive of any temperature effects incurred by the addition of makeup and/or the removal of blowdown.

Collection Basin: Chamber below and integral with the tower where water is transiently collected and directed to the sump or pump suction line.

Counterflow: Air flow direction through the fill is countercurrent to that of the falling water.

Crossflow: Air flow direction through the fill is essentially perpendicular to that of the falling water.

Distribution Basin: Shallow pan-type elevated basin used to distribute hot water over the tower fill by means of orifices in the basin floor. Application is normally limited to crossflow towers.

Double-Flow: A crossflow cooling tower where two opposed fill banks are served by a common air plenum.

Drift: Circulating water loss from the tower as liquid droplets entrained in the exhaust air stream. Units percent of circulating water rate or gpm. [For more precise work, an L/G parameter is used, and drift becomes pounds of water per million pounds of exhaust air (ppmw).]

Drift Eliminators: An assembly of baffles or labyrinth passages through which the air passes prior to its exit from the tower, for the purpose of removing entrained water droplets from the exhaust air.

Dry-Bulb Temperature: The temperature of the entering or ambient air adjacent to the cooling tower as measured with a dry-bulb thermometer.

Evaporation Loss: Water evaporated from the circulating water into the air stream in the cooling process.

Air Horsepower: The power output developed by a fan in moving a given air rate against a given resistance.

Air Inlet: Opening in a cooling tower through which air enters. Sometimes referred to as the louvered face on induced draft towers.

Air Rate: Mass flow of dry air per square foot of cross-sectional area in the tower's heat transfer region per hour.

Air Velocity: Velocity of air-vapor mixture through a specific region of the tower (i.e. the fan).

Ambient Wet-Bulb Temperature: The wet-bulb temperature of the air encompassing a cooling tower, not including any temperature contribution by the tower itself. Generally measured upwind of a tower, in a number of locations sufficient to account for all extraneous sources of heat.

Approach: Difference between the cold water temperature and the entering wet-bulb temperature.

FIG. 11-1 (Cont'd)

Nomenclature

Blowdown: Water discharged from the system to control concentrations of salt or other impurities in the circulating water.

Capacity: The amount of water that a cooling tower will cool through a specified range, at a specified approach and wet-bulb temperature.

Cell: Smallest tower subdivision which can function as an independent unit with regard to air and water flow; it is bounded by either exterior walls or partition walls. Each cell may have one or more fans and one or more distribution systems.

Circulation Rate: Actual water flow rate through a given tower.

Fan Cylinder: Cylindrical or venturi-shaped structure in which a propeller fan operates. Sometimes referred to as a fan "stack" on larger towers.

Fan Deck: Surface enclosing the top of an induced draft cooling tower, exclusive of the distribution basins on a crossflow tower.

Fan Pitch: The angle which the blades of a propeller fan make with the plane of rotation, measured at a prescribed point on each blade.

Fill: That portion of a cooling tower which constitutes its primary heat transfer surface. Sometimes referred to as "packing."

Forced Draft: Refers to the movement of air under pressure through a cooling tower. Fans of forced draft towers are located at the air inlets to "force" air through the tower.

Hot Water Temperature: Temperature of circulating water entering the cooling tower's distribution system.

Induced Draft: Refers to the movement of air through a cooling tower by means of an induced partial vacuum. Fans of induced draft towers are located at the air discharges to "draw" air through the tower.

Liquid-to-Gas Ratio: A ratio of the total mass flows of water and dry air in a cooling tower. (See Air Rate and Water Rate)

Louvers: Blade or passage type assemblies installed at the air inlet face of a cooling tower to control water splashout and/or promote uniform air flow through the fill. In the case of film-type crossflow fill, they may be integrally molded to the fill sheets.

Makeup: Water added to the circulating water system to replace water lost by evaporation, drift, windage, blowdown, and leakage.

Natural Draft: Refers to the movement of air through a cooling tower purely by natural means. Typically, by the driving force of a density differential.

Net Effect Volume: That portion of the total structural volume within which the circulating water is in intimate contact with the flowing air.

Performance Factor: Variable used in determining performance characteristics in cooling towers.

Psychrometer: An instrument incorporating both a dry-bulb and a wet-bulb thermometer, by which simultaneous dry-bulb and wet-bulb temperature readings can be taken.

Range: Difference between the hot water temperature and the cold water temperature.

Recirculation: Describes a condition in which a portion of the tower's discharge air re-enters the air inlets along with the fresh air. Its effect is an elevation of the average entering wet-bulb temperatures compared to the ambient.

Water Rate: Mass flow of water per square foot of fill plan area of the cooling tower per hour.

Wet-Bulb Temperature: the temperature of the entering or ambient air adjacent to the cooling tower as measured with a wet-bulb thermometer.

Wet-Bulb Thermometer: A thermometer whose bulb is encased within a wetted wick.

Windage: Water lost from the tower because of the effects of wind.

Wind Load: The load imposed upon a structure by a wind blowing against its surface.

---

latent heat allows the water to be cooled below the ambient dry-bulb temperature. The dry air enters the cooling tower and begins to gain moisture and enthalpy in an effort to reach equilibrium with the water. The water may be cooled 15°F or more while the air mass dry-bulb temperature may increase only slightly. A psychrometric chart (Fig. 11-2) may be used to illustrate the relationships between wet- and dry-bulb temperatures. All nomenclature is indicated in Fig. 11-1.

Wet-bulb Temperature

The basis for thermal design of an evaporative type cooling tower is the wet-bulb temperature of the air entering the tower. Water cannot be cooled below the wet-bulb temperature by evaporation. The air entering the tower at a temperature of 75°F and 100% relative humidity has a 75°F "wet-bulb" temperature. The wet-bulb temperature is usually measured using a sling psychrometer. Wet bulb and dry bulb data for various locations around the world are shown in Figs. 11-3a and 11-3b.

Types of Cooling Systems

Cooling water is circulated through equipment to absorb and carry away heat. The basic cooling systems are shown in Fig. 11-4. The open recirculating system is the most common for industrial plants.

The open recirculating system routes cooled water through the heat-exchange equipment. Effluent warm water then is cooled by contact with air in a cooling tower. The cooling effect is produced by evaporation of a portion of the circulating water, and this evaporation causes the dissolved solids in the water to become concentrated. Water lost by evaporation must be replaced by makeup water. But water lost through entrainment of droplets in the circulating air (windage or drift) tends to limit the degree of concentration since the entrained droplets also contain dissolved solids. Windage loss varies with the type of tower.

FIG. 11-2

Psychrometric Chart

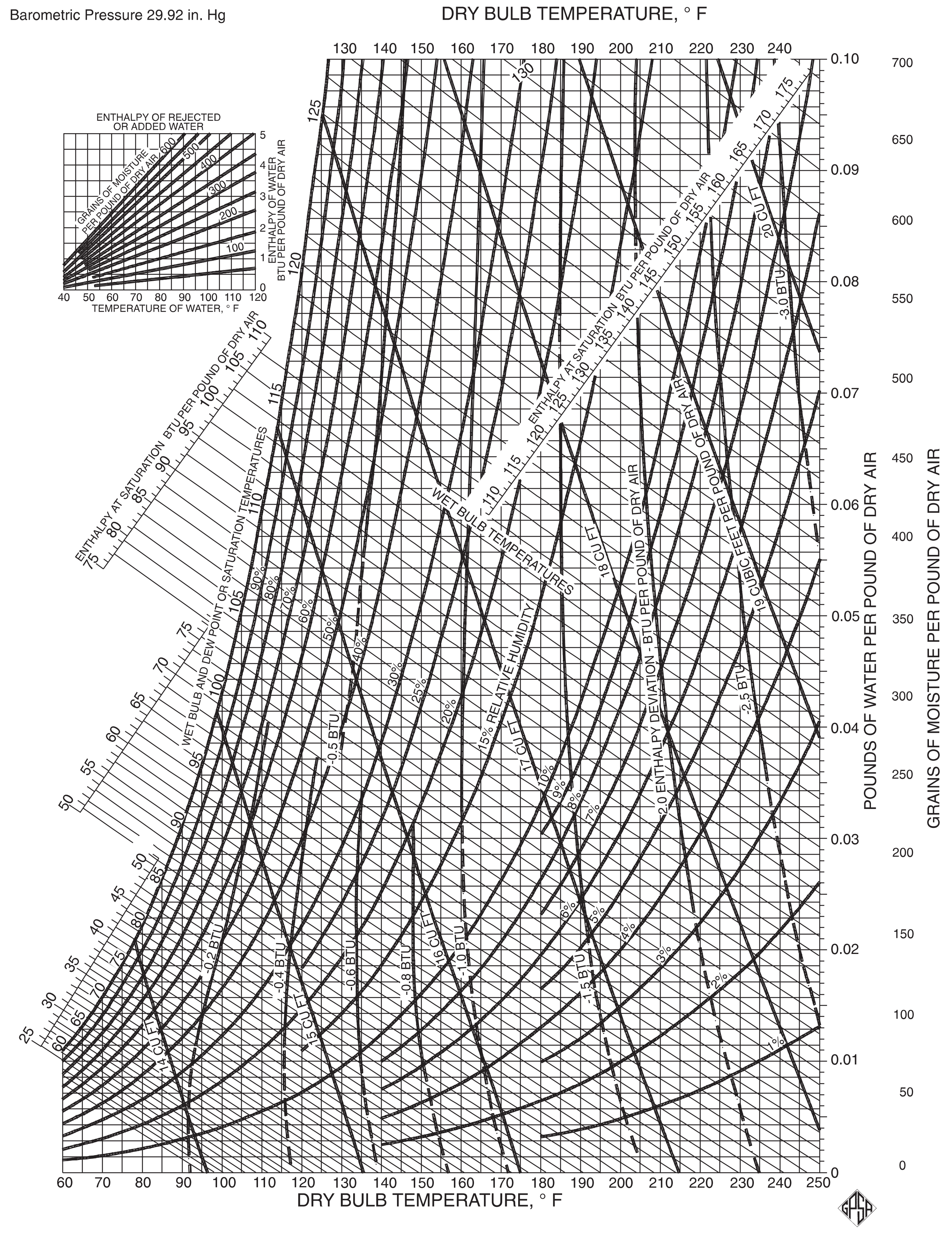

FIG. 11-3a

Dry Bulb/Wet Bulb Temperature Data [2]

U.S. State and Stations	Design Dry-Bulb °F 5%	Design Wet-Bulb °F 5%
ALABAMA		
Alexander City	91	78
Anniston	92	78
Auburn	91	78
Birmingham	92	76
Decatur	91	76
Dothan	91	78
Florence	92	76
Gadsden	92	76
Huntsville	91	76
Mobile AP	91	78
Mobile CO	91	78
Montgomery	93	78
Selma-Craig	93	79
Talladega	92	78
Tuscaloosa	94	77
ALASKA		
Anchorage	66	57
Barrow	49	47
Fairbanks	75	60
Juneau	67	58
Kodiak	62	56
Nome	59	55
ARIZONA		
Douglas	93	68
Flagstaff	80	59
Fort Huachuca	90	67
Kingman	97	69
Nogales	94	69
Phoenix	105	75
Prescott	92	64
Tucson	100	71
Winslow	93	64
Yuma	107	77
ARKANSAS		
Blytheville	91	78
Camden	94	78
El Dorado	94	78
Fayetteville	92	75
Fort Smith	95	78
Hot Springs	94	78
Jonesboro	91	78
Little Rock	94	78
Pine Bluff	95	80
Texarkana	93	78
CALIFORNIA		
Bakersfield	98	70
Barstow	102	70
Blythe	108	74
Burbank	88	69
Chico	98	68
Concord	94	68
Covina	92	70
Crescent City	63	59
Downey	86	70
El Cajon	78	68
El Centro	108	78
Escondido	82	69
Eureka/Arcata	63	59
Fairfield-Travis AFB	91	67
Fresno	97	70
Hamilton	80	67
Laguna Beach	77	68
Livermore	93	68
Lompoc, Vandenburg AFB	67	60
Long Beach	77	68
Los Angeles AP	77	68
Los Angeles CO	86	70
Merced-Castle AFB	96	70
Modesto	95	69
Monterey	68	61
Napa	92	68
Needles	108	74
Oakland	75	63
Oceanside	77	68
Ontario	96	71
Oxnard	77	67
Palmdale	98	66
Palm Springs	108	73
Pasadena	92	70
Petaluma	87	68
Pomona	95	71
Redding	100	68
Redlands	96	71
Richmond	75	63
Riverside-March AFB	95	70
Sacramento	94	70
Salinas	67	59
San Bernardino, Norton AFB	96	71
San Diego	78	68
San Fernando	88	69
San Francisco AP	73	62
San Francisco CO	69	61
San Jose	77	65
San Luis Obispo	84	70
Santa Ana	82	69
Santa Barbara	75	66
Santa Cruz	68	61
Santa Maria	73	63
Santa Monica	77	68
Santa Paula	84	68
Santa Rosa	91	67
Stockton	94	68
Ukiah	91	67
Visalia	97	70
Yreka	89	64
Yuba City	99	68
COLORADO		
Alamosa	80	60
Boulder	89	62
Colorado Springs	86	61
Denver	89	62
Durango	85	62
Fort Collins	89	62
Grand Junction	92	62
Greeley	92	63
La Junta	95	69
Leadville	78	54
Pueblo	92	65
Sterling	90	65
Trinidad	89	64
CONNECTICUT		
Bridgeport	81	73
Hartford, Brainard Field	85	74
New Haven	82	74
New London	83	74
Norwalk	81	73
Norwich	83	74
Waterbury	82	72
Windsor Locks, Bradley Field	85	73
DELAWARE		
Dover AFB	87	76
Wilmington	87	75
DISTRICT OF COLUMBIA		
Andrews AFB	87	75
Washington National	89	76
FLORIDA		
Belle Glade	89	78
Cape Kennedy	87	79
Daytona Beach	88	78
Fort Lauderdale	90	79
Fort Myers	91	79
Fort Pierce	89	79
Gainesville	92	78
Jacksonville	92	78
Key West	89	79
Lakeland	89	78
Miami	89	78
Miami Beach	88	78
Ocala	92	78
Orando	91	78
Panama City, Tyndall AFB	89	79
Pensacola	91	79
St. Augustine	87	79
St. Petersburg	90	78
Sanford	91	78
Sarasota	90	78
Tallahassee	90	78
Tampa	90	78
West Palm Beach	90	79
GEORGIA		
Albany, Turner AFB	93	78
Americus	92	77
Athens	90	76
Atlanta	90	75
Augusta	93	78
Brunswick	87	79
Columbus, Lawson AFB	91	77
Dalton	91	77
Dublin	91	77
Gainesville	89	75
Griffin	88	76
La Grange	89	76
Macon	91	77
Marietta, Dobbins AFB	90	76
Moultrie	92	78
Rome	91	77
Savannah-Travis	91	78
Valdosta-Moody AFB	92	78
Waycross	91	78
HAWAII		
Hilo	82	74
Honolulu	85	74
Kaneohe Bay	83	75
Wahiawa	84	73
IDAHO		
Boise	91	65
Burley	92	61
Coeur d'Alene	83	61
Idaho Falls	84	61
Lewiston	90	64
Moscow	84	62
Mountain Home AFB	94	63
Pocatello	89	61
Twin Falls	92	61
ILLINOIS		
Aurora	88	76
Belleville, Scott AFB	89	76
Bloomington	88	75
Carbondale	90	77
Champaign/Urbana	90	75
Chicago, Midway	88	74
Chicago, O'Hare	86	74
Chicago	88	75
Danville	88	75
Decatur	88	75
Dixon	88	75
Elgin	86	75
Freeport	87	74
Galesburg	88	75
Greenville	89	76
Joliet	88	75
Kankakee	88	75
La Salle/Peru	88	75
Macomb	89	76
Moline	88	75
Mt. Vernon	89	76
Peoria	87	75
Quincy	90	77
Rantoul, Chanute AFB	89	75
Rockford	87	74
Springfield	89	76
Waukegan	87	75
INDIANA		
Anderson	89	76
Bedford	89	76
Bloomington	89	76
Columbus, Bakalar AFB	90	76
Crawfordsville	88	76
Evansville	91	77
Fort Wayne	87	74
Goshen	86	74
Hobart	85	74
Huntington	87	74
Indianapolis	87	75
Jeffersonville	90	76
Kokomo	88	74
Lafayette	88	75
La Porte	87	75
Marion	88	74
Muncie	87	75
Peru, Bunker Hill AFB	86	74
Richmond	87	75
Shelbyville	88	75
South Bend	86	74
Terre Haute	89	76
Valparaiso	87	75
Vincennes	90	76
IOWA		
Ames	87	75
Burlington	88	75
Cedar Rapids	86	75
Clinton	87	75
Council Bluffs	88	75
Des Moines	88	75
Dubuque	86	74
Fort Dodge	86	74
Iowa City	87	76
Keokuk	89	76
Marshalltown	88	75
Mason City	85	74
Newton	88	75
Ottumwa	88	75
Sioux City	89	75
Waterloo	86	75
KANSAS		
Atchison	91	77
Chanute	94	76
Dodge City	95	71
El Dorado	96	75
Emporia	94	76
Garden City	94	71
Goodland	93	68
Great Bend	95	75
Hutchinson	97	74
Liberal	94	71
Manhattan, Fort Riley	92	76
Parsons	94	76
Russell	95	75
Salina	97	75
Topeka	93	76
Wichita	96	75
KENTUCKY		
Ashland	89	75
Bowling Green	89	76
Corbin	89	75
Covington	88	74
Hopkinsville, Campbell AFB	89	76
Lexington	88	75
Louisville	90	76
Madisonville	90	77
Owensboro	91	77
Paducah	92	77
LOUISIANA		
Alexandria	92	78

FIG. 11-3a (Cont'd)

Dry Bulb/Wet Bulb Temperature Data[2]

U.S. State and Stations	Design Dry-Bulb °F 5%	Design Wet-Bulb °F 5%
Baton Rouge	92	79
Bogalusa	92	79
Houma	92	79
Lafayette	92	79
Lake Charles	92	79
Minden	94	78
Monroe	94	78
Natchitoches	93	78
New Orleans	90	79
Shreveport	94	78
MAINE		
Augusta	82	70
Bangor, Dow AFB	80	69
Caribou	78	67
Lewiston	82	70
Millinocket	80	68
Portland	81	70
Waterville	81	70
MARYLAND		
Baltimore AP	89	76
Baltimore CO	87	76
Cumberland	87	75
Frederick	88	76
Hagerstown	89	75
Salisbury	88	76
MASSACHUSETTS		
Boston	85	72
Clinton	84	72
Fall River	81	72
Framingham	83	71
Gloucester	83	72
Greenfield	82	71
Lawrence	84	73
Lowell	85	73
New Bedford	80	72
Pittsfield	81	70
Springfield, Westover AFB	84	72
Taunton	83	73
Worcester	81	70
MICHIGAN		
Adrian	85	73
Alpena	83	70
Battle Creek	85	73
Benton Harbor	85	72
Detroit	86	73
Escanaba	80	69
Flint	85	72
Grand Rapids	85	72
Holland	83	72
Jackson	85	73
Kalamazoo	85	73
Lansing	84	72
Marquette	77	68
Mt. Pleasant	84	72
Muskegon	82	72
Pontiac	85	73
Port Huron	83	73
Saginaw	84	72
Sault St. Marie	77	68
Traverse City	83	71
Ypsilanti	86	72
MINNESOTA		
Albert Lea	84	73
Alexandria	85	72
Bemidji	81	69
Brainerd	84	71
Duluth	79	68
Fairbault	85	73
Fergus Falls	85	72
International Falls	80	68
Mankato	85	73
Minneapolis/St. Paul	86	73
Rochester	84	73
St. Cloud	85	72

U.S. State and Stations	Design Dry-Bulb °F 5%	Design Wet-Bulb °F 5%
Virginia	80	68
Willmar	85	72
Winona	85	74
MISSISSIPPI		
Biloxi, Keesler AFB	90	80
Clarksdale	92	78
Columbus AFB	91	78
Greenville AFB	91	78
Greenwood	91	78
Hattiesburg	92	79
Jackson	93	78
Laurel	92	79
McComb	92	78
Meridian	93	78
Natchez	92	79
Tupelo	92	78
Vicksburg	93	79
MISSOURI		
Cape Girardeau	92	77
Columbia	91	76
Farmington	90	75
Hannibal	90	77
Jefferson City	92	76
Joplin	94	76
Kansas City	93	76
Kirksville	90	76
Mexico	91	76
Moberly	91	76
Poplar Bluff	92	78
Rolla	89	76
St. Joseph	91	77
St. Louis AP	91	76
St. Louis CO	91	76
Sedalia, Whiteman AFB	90	76
Sikeston	92	77
Springfield	91	75
MONTANA		
Billings	88	64
Bozeman	84	60
Butte	80	57
Cut Bank	82	61
Glasgow	85	64
Glendive	89	65
Great Falls	85	60
Havre	87	65
Helena	85	61
Kalispell	84	62
Lewiston	83	62
Livingston	84	60
Miles City	92	67
Missoula	85	62
NEBRASKA		
Beatrice	92	76
Chadron	91	68
Columbus	92	75
Fremont	92	76
Grand Island	91	73
Hastings	91	73
Kearney	90	72
Lincoln	92	76
McCook	91	71
Norfolk	90	75
North Platte	90	71
Omaha	88	75
Scottsbluff	90	67
Sidney	90	67
NEVADA		
Carson City	89	60
Elko	90	60
Ely	85	58
Las Vegas	104	69
Lovelock	93	64
Reno AP	90	61
Reno CO	91	61

U.S. State and Stations	Design Dry-Bulb °F 5%	Design Wet-Bulb °F 5%
Tonopah	90	61
Winnemucca	92	61
NEW HAMPSHIRE		
Berlin	81	70
Claremont	83	71
Concord	84	71
Keene	83	71
Laconia	83	71
Manchester, Grenier AFB	85	72
Portsmouth, Pease AFB	83	72
NEW JERSEY		
Atlantic City	86	75
Long Branch	87	75
Newark	88	75
New Brunswick	86	75
Paterson	88	75
Phillipsburg	86	74
Trenton	85	75
Vineland	86	75
NEW MEXICO		
Alamogordo, Holloman AFB	94	67
Albuquerque	92	64
Artesia	97	70
Carlsbad	97	70
Clovis	91	67
Farmington	91	64
Gallup	86	61
Grants	85	61
Hobbs	97	69
Las Cruces	94	67
Los Alamos	85	60
Raton	87	63
Roswell, Walker AFB	96	69
Santa Fe	86	61
Silver City	91	63
Socorro	93	65
Tucumcari	95	68
NEW YORK		
Albany AP	85	72
Albany CO	85	72
Auburn	84	72
Batavia	84	72
Binghamton	81	70
Buffalo	83	72
Cortland	82	71
Dunkirk	83	72
Elmira	83	71
Geneva	84	72
Glen Falls	82	71
Gloversville	83	72
Hornell	82	72
Ithaca	82	71
Jamestown	83	71
Kingston	85	73
Lockport	84	73
Massena	80	70
Newburg-Stewart AFB	85	73
NYC-Central Park	87	74
NYC-Kennedy AP	84	74
NYC-LaGuardia AP	87	74
Niagara Falls	84	73
Olean	81	71
Oneonta	80	70
Oswego	80	72
Plattsburg AFB	80	70
Poughkeepsie	86	74
Rochester	85	72
Rome-Griffiss AFB	83	71
Schenectady	84	72
Suffolk County AFB	80	73
Syracuse	84	72
Utica	82	71

U.S. State and Stations	Design Dry-Bulb °F 5%	Design Wet-Bulb °F 5%
Watertown	81	72
NORTH CAROLINA		
Asheville	85	72
Charlotte	91	76
Durham	90	76
Elizabeth City	89	78
Fayetteville, Pope AFB	90	77
Goldsboro, Seymour-Johnson AFB	89	77
Greensboro	89	75
Greenville	89	77
Henderson	90	77
Hickory	88	73
Jacksonville	88	78
Lumberton	90	77
New Bern	88	78
Raleigh/Durham	90	76
Rocky Mount	89	77
Wilmington	89	79
Winston-Salem	89	74
NORTH DAKOTA		
Bismark	88	70
Devil's Lake	85	69
Dickinson	87	68
Fargo	85	72
Grand Forks	84	70
Jamestown	87	71
Minot	86	68
Williston	85	68
OHIO		
Akron-Canton	84	72
Ashtabula	83	72
Athens	90	74
Bowling Green	86	73
Cambridge	87	75
Chillicothe	90	74
Cincinnati	88	74
Cleveland	86	73
Columbus	87	74
Dayton	86	73
Defiance	88	74
Findlay	87	74
Fremont	85	73
Hamilton	87	73
Lancaster	88	74
Lima	88	74
Mansfield	85	73
Marion	88	74
Middletown	87	73
Newark	89	74
Norwalk	85	73
Portsmouth	89	75
Sandusky	88	73
Springfield	87	74
Steubenville	84	72
Toledo	85	73
Warren	85	71
Wooster	84	72
Youngstown	84	71
Zanesville	87	75
OKLAHOMA		
Ada	95	75
Altus AFB	98	75
Ardmore	95	76
Bartlesville	95	76
Chickasha	95	76
Enid-Vance AFB	97	76
Lawton	96	76
McAlester	93	75
Muskogee	95	77
Norman	94	75
Oklahoma City	95	76
Ponca City	94	76
Seminole	94	75

FIG. 11-3a (Cont'd)

Dry Bulb/Wet Bulb Temperature Data [2]

U.S. State and Stations	Design Dry-Bulb °F 5%	Design Wet-Bulb °F 5%
Stillwater	93	75
Tulsa	95	77
Woodward	94	75
OREGON		
Albany	86	66
Astoria	68	62
Baker	86	61
Bend	84	60
Corvallis	86	66
Eugene	86	66
Grants Pass	93	68
Klamath Falls	84	60
Medford	91	67
Pendleton	90	63
Portland AP	81	66
Portland CO	82	66
Roseburg	87	66
Salem	84	66
The Dalles	85	67
PENNSYLVANIA		
Allentown	86	73
Altoona	84	72
Butler	85	73
Chambersburg	87	75
Erie	83	72
Harrisburg	88	75
Johnstown	80	70
Lancaster	87	75
Meadville	83	71
New Castle	86	73
Philadelphia	87	75
Pittsburgh AP	84	72
Pittsburgh CO	86	72
Reading	86	73
Scranton/Wilkes-Barre	84	72
State College	84	72
Sunbury	86	73
Uniontown	85	74
Warren	83	72
West Chester	86	75
Williamsport	86	73
York	88	75
RHODE ISLAND		
Newport	82	73
Providence	83	73
SOUTH CAROLINA		
Anderson	90	75
Charleston AFB	89	79
Charleston	90	79
Columbia	93	77
Florence	90	78
Georgetown	88	79
Greenville	89	75
Greenwood	91	76
Orangeburg	93	77
Rock Hill	92	76
Spartanburg	89	75
Sumter-Shaw AFB	90	77
SOUTH DAKOTA		
Aberdeen	88	73
Brookings	89	73
Huron	90	73
Mitchel	90	73
Pierre	92	72
Rapid City	89	67
Sioux Falls	88	73
Watertown	88	73
Yankton	88	74
TENNESSEE		
Athens	90	75
Bristol-Tri City	87	73
Chattanooga	91	76
Clarksville	90	76
Columbia	91	76
Dyersburg	91	78
Greenville	88	74
Jackson	92	77
Knoxville	90	75
Memphis	93	78
Murfreesboro	91	76
Nashville	91	76
Tullahoma	91	75
TEXAS		
Abilene	97	74
Alice	95	79
Amarillo	93	70
Austin	97	77
Bay City	92	79
Beaumont	91	80
Beeville	95	79
Big Springs	95	72
Brownsville	92	79
Brownwood	96	75
Bryan	94	78
Corpus Christi	92	79
Corsicana	96	77
Dallas	97	77
Del Rio, Laughlin AFB	97	76
Denton	97	76
Eagle Pass	98	77
El Paso	96	68
Fort Worth	97	76
Galveston	88	80
Greenville	97	76
Harlingen	93	79
Houston AP	92	79
Houston CO	93	79
Huntsville	96	77
Killeen-Gray AFB	95	75
Lamesa	94	71
Laredo	99	77
Longview	95	78
Lubbock	94	71
Lufkin	94	78
McAllen	94	79
Midland	96	71
Mineral Wells	97	76
Palestine	96	78
Pampa	94	70
Pecos	96	71
Plainview	94	70
Port Arthur	91	80
San Angelo, Goodfellow AFB	97	73
San Antonio	96	76
Sherman Perrin AFB	95	76
Snyder	96	72
Temple	97	77
Tyler	95	78
Vernon	97	75
Victoria	94	79
Waco	97	77
Wichita Falls	98	75
UTAH		
Cedar City	89	62
Logan	88	63
Moab	96	63
Ogden	88	64
Price	89	62
Provo	94	64
Richfield	89	62
St. George	99	67
Salt Lake City	92	64
Vernal	86	62
VERMONT		
Barre	78	70
Burlington	82	71
Rutland	81	71
VIRGINIA		
Charlottesville	88	75
Danville	90	75
Fredericksburg	90	76
Harrisonburg	88	73
Lynchburg	88	75
Norfolk	89	77
Petersburg	90	77
Richmond	90	77
Roanoke	88	73
Staunton	88	73
Winchester	88	75
WASHINGTON		
Aberdeen	73	62
Bellingham	74	63
Bremerton	75	63
Ellensburg	87	63
Everett-Paine AFB	73	63
Kennewick	92	67
Longview	81	66
Moses Lake, Larson AFB	90	64
Olympia	79	64
Port Angeles	67	61
Seattle-Boeing Fld	77	65
Seattle CO	78	65
Seattle-Tacoma AP	76	63
Spokane	87	62
Tacoma-McChord AFB	79	64
Walla Walla	90	66
Wenatchee	92	65
Yakima	89	65
WEST VIRGINIA		
Beckley	79	70
Bluefield	79	70
Charleston	87	74
Clarksburg	87	74
Elkins	82	71
Huntington	89	75
Martinsburg	88	75
Morgantown	85	74
Parkersburg	88	75
Wheeling	84	72
WISCONSIN		
Appleton	83	72
Ashland	79	68
Beloit	88	75
Eau Claire	86	73
Fond du Lac	84	72
Green Bay	83	72
La Crosse	85	74
Madison	85	73
Manitowoc	83	72
Marinette	82	71
Milwaukee	84	73
Racine	85	74
Sheboygan	83	74
Stevens Point	86	73
Waukesha	84	73
Wausau	85	72
WYOMING		
Casper	87	60
Cheyenne	84	60
Cody	83	61
Evanston	82	57
Lander	85	61
Laramie	79	59
Newcastle	84	66
Rawlins	81	60
Rock Springs	82	57
Sheridan	88	63
Torrington	88	63

The dry bulb and wet bulb temperatures represent values which have been equalled or exceeded by 5% of the total hours during the months of June through September in the northern hemisphere and the months December through March in the southern hemisphere.

The data for Canadian stations are based on the month of July only.

AP = airport AFB = air force base CO = urban offices

Reprinted by permission of the American Society of Heating, Refrigerating and Air-Conditioning Engineers, Atlanta, Georgia, from the 1993 ***ASHRAE Handbook—Fundamentals.***

FIG. 11-3b

Dry Bulb/Wet Bulb Temperature Data^2

Country and Station	Design Dry-Bulb °F 5%	Design Wet-Bulb °F 5%
ADEN		
Aden	98	82
AFGHANISTAN		
Kabul	93	64
ALGERIA		
Algiers	89	75
ARGENTINA		
Buenos Aires	86	75
Córdoba	93	74
Tucuman	96	74
AUSTRALIA		
Adelaide	91	68
Alice Springs	100	72
Brisbane	86	75
Darwin	91	81
Melbourne	86	68
Perth	93	73
Sydney	80	72
AUSTRIA		
Vienna	83	67
AZORES		
Lajes (Terceira)	77	71
BAHAMAS		
Nassau	88	79
BELGIUM		
Brussels	77	67
BELIZE		
Belize	89	81
BERMUDA		
Kindley AFB	85	78
BOLIVIA		
La Paz	68	56
BRAZIL		
Belem	87	78
Belo Horizonte	83	75
Brazilia	86	75
Curitiba	82	74
Fortaleza	89	78
Porto Alegre	89	75
Recife	86	77
Rio de Janeiro	90	78
Salvador	86	78
São Paulo	82	74
BULGARIA		
Sofia	84	69
BURMA		
Mandalay	101	80
Rangoon	95	82
CAMBODIA		
Phnom Penh	94	82
CANADA (Alberta)		
Calgary	79	62
Edmonton	79	65
Grande Prairie	78	62
Jasper	77	63
Lethbridge	84	65
McMurray	79	65
Medicine Hat	87	66
Red Deer	78	64
CANADA (British Columbia)		
Dawson Creek	76	62
Fort Nelson	78	64
Kamloops	88	65
Nanaimo	77	65
New Westminster	78	66
Penticton	87	67
Prince George	77	62
Prince Rupert	61	57
Trail	86	65
Vancouver	74	66
Victoria	70	60
CANADA (Manitoba)		
Brandon	83	70
Churchill	74	63
Dauphin	81	70
Flin Flon	79	67
Portage la Prairie	83	71
The Pas	79	68
Winnepeg	84	71
CANADA (New Brunswick)		
Campbellton	79	68
Chatham	82	69
Edmundston	80	69
Fredericton	82	70
Moncton	79	69
Saint John	75	66
CANADA (Newfoundland)		
Corner Brook	71	65
Gander	77	66
Goose Bay	77	64
St. John's	73	66
Stephenville	71	65
CANADA (Northwest Terr.)		
Fort Smith	78	65
Frobisher	59	51
Inuvik	75	61
Resolute	51	46
Yellowknife	74	62
CANADA (Nova Scotia)		
Amherst	79	68
Halifax	74	66
Kentville	80	69
New Glasgow	77	69
Sydney	77	68
Truro	78	70
Yarmouth	70	65
CANADA (Ontario)		
Belleville	82	73
Chatham	85	74
Cornwall	84	72
Hamilton	83	73
Kapuskasing	80	69
Kenora	80	70
Kingston	82	73
Kitchener	83	72
London	83	73
North Bay	79	68
Oshawa	84	73
Ottawa	84	72
Owen Sound	80	70
Peterborough	83	72
St. Catharines	83	73
Sarnia	84	73
Sault Ste. Marie	79	70
Sudbury	81	68
Thunder Bay	80	68
Timmins	81	68
Toronto	85	73
Windsor	86	74
CANADA (Prince Edward Island)		
Charlottetown	76	68
Summerside	77	68
CANADA (Quebec)		
Bagotville	80	68
Chicoutimi	80	68
Drummondville	82	71
Granby	83	72
Hull	84	72
Mégantic	81	71
Montréal	83	72
Québec	81	70
Rimouski	76	67
St. Jean	84	72
St. Jéirome	83	72
Sept. Iles	70	63
Shawnigan	82	71
Sherbrooke	81	71
Thetford Mines	81	71
Trois Riviéres	82	71
Val d'Or	80	68
Valleyfield	84	72
CANADA (Saskatchewan)		
Estevan	86	69
Moose Jaw	86	68
North Battleford	82	66
Prince Albert	81	67
Regina	84	68
Saskatoon	83	67
Swift Current	87	67
Yorkton	80	68
CANADA (Yukon Territory)		
Whitehorse	74	58
CEYLON		
Colombo	88	80
CHILE		
Punta Arenas	64	54
Santiago	88	69
Valparaiso	77	65
CHINA		
Chungking	95	79
Shanghai	90	80
COLOMBIA		
Baranquilla	93	82
Bogotá	69	58
Cali	79	68
Medellin	84	72
CONGO		
Brazzaville	91	80
Kinasha (Leopoldville)	90	80
Stanleyville	90	80
CUBA		
Guantanamo Bay	92	80
Havana	89	80
CZECHOSLOVAKIA		
Prague	83	64
DENMARK		
Copenhagen	74	64
DOMINICAN REPUBLIC		
Santo Domingo	88	80
ECUADOR		
Guayacil	89	79
Quito	71	62
EL SALVADOR		
San Salvador	95	75
ETHIOPIA		
Addis Ababa	81	64
Asmara	80	63
FINLAND		
Helsinki	72	63
FRANCE		
Lyon	86	69
Marseilles	84	69
Nantes	80	67
Nice	83	72
Paris	83	67
Strasbourg	80	67
FRENCH GUIANA		
Cayenne	90	82
GERMANY		
Berlin	78	66
Hamburg	73	65
Hannover	75	65
Mannheim	82	68
Munich	80	64
GHANA		
Accra	89	79
GIBRALTER		
Gibralter	86	74
GREECE		
Athens	91	71
Thessaloniki	91	75
GREENLAND		
Narssarssuaq	61	52
GUATEMALA		
Guatemala City	81	67
GUYANA		
Georgetown	87	79
HAITI		
Port au Prince	93	80
HONDURAS		
Tegucigalpa	85	71
HONG KONG		
Hong Kong	90	80
HUNGARY		
Budapest	84	70
ICELAND		
Reykjavik	56	53
INDIA		
Ahmenabad	105	78
Bangalore	93	74
Bombay	92	81
Calcutta	96	82
Madras	101	83
Nagpur	107	78
New Delhi	105	82
INDONESIA		
Djakarta	88	78
Kupang	92	80
Makassar	88	79
Medan	90	79
Palembang	90	79
Surabaya	89	79
IRAN		
Abadan	110	81
Meshed	93	66
Tehran	98	73
IRAQ		
Baghdad	108	72
Mosul	110	72
IRELAND		
Dublin	70	62
Shannon	71	63
ISRAEL		
Jerusalem	92	69
Tel Aviv	91	72
ITALY		
Milan	84	74
Naples	86	72
Rome	89	72
IVORY COAST		
Abidjan	88	81
JAPAN		
Fukuoka	89	79
Sapporo	80	72
Tokyo	87	79
JORDAN		
Amman	92	68
KENYA		
Nairobi	78	65
KOREA		
Pyongyang	85	76
Seoul	87	78
LEBANON		
Beirut	90	76
LIBERIA		
Monrovia	88	81
LIBYA		
Bengasi	91	75
MADAGASCAR		
Rananarive	83	71
MALAYSIA		
Kuala Lumpur	92	81
Penang	92	80
Singapore	90	80
MARTINIQUE		
Fort de France	88	80
MEXICO		
Guadalajara	89	66
Mérida	94	77
Mexico City	79	59
Monterrey	93	77
Vera Cruz	88	82

FIG. 11-3b (Cont'd)

Dry Bulb/Wet Bulb Temperature Data^2

Country and Station	Design Dry-Bulb °F 5%	Design Wet-Bulb °F 5%
MOROCCO		
Casablanca	86	70
NEPAL		
Katmandu	86	76
NETHERLANDS		
Amsterdam	73	63
NEW GUINEA		
Manokwari	87	81
Point Moresby	90	79
NEW ZEALAND		
Auckland	76	65
Christ Church	76	66
Wellington	72	64
NICARAGUA		
Managua	92	79
NIGERIA		
Lagos	90	81
NORWAY		
Bergen	73	65
Oslo	74	64
PAKISTAN		
Chittagong	89	81
Karachi	95	81
Lahore	105	81
Peshwar	103	79
PANAMA & CANAL ZONE	91	80
Panama City		
PARAGUAY		
Asunción	96	80
PERU		
Lima	84	74

Country and Station	Design Dry-Bulb °F 5%	Design Wet-Bulb °F 5%
PHILIPPINES		
Manilla	91	81
POLAND		
Kraków	78	66
Warsaw	78	68
PORTUGAL		
Lisbon	83	67
PUERTO RICO		
San Juan	87	79
RUMANIA		
Bucharest	89	70
SAUDI ARABIA		
Dhahran	108	84
Jedda	100	83
Riyadh	106	76
SENEGAL		
Dakar	91	80
SOMALIA		
Mogadiscio	89	81
SOUTH AFRICA		
Capetown	86	70
Johannesburg	81	69
Pretoria	85	68
SOVIET UNION		
Alma Ata	83	67
Archangel	68	57
Kaliningrad	77	65
Krasnoyarsk	76	60
Kiev	81	67
Kharkov	82	67
Kuibyshev	81	66
Leningrad	72	63

Country and Station	Design Dry-Bulb °F 5%	Design Wet-Bulb °F 5%
Minsk	74	65
Moscow	78	65
Odessa	82	68
Petropavlovsk	65	56
Rostov on Don	84	68
Sverdlovsk	72	60
Tashkent	90	69
Tblisi	83	66
Vladivostok	74	68
Volgograd	86	69
SPAIN		
Barcelona	84	73
Madrid	89	67
Valencia	88	73
SUDAN		
Khartoum	104	75
SURINAM		
Paramaribo	90	81
SWEDEN		
Stockholm	72	60
SWITZERLAND		
Zurich	78	66
SYRIA		
Damascus	98	70
TAIWAN		
Tainan	90	82
Taipei	90	81
TANZANIA		
Dar es Salaam	88	81
THAILAND		
Bangkok	93	81

Country and Station	Design Dry-Bulb °F 5%	Design Wet-Bulb °F 5%
TRINIDAD		
Port of Spain	89	79
TUNISIA		
Tunis	96	74
TURKEY		
Adana	95	77
Ankara	89	66
Istanbul	86	73
Izmir	94	73
UNITED ARAB REPUBLIC		
Cairo	98	74
UNITED KINGDOM	69	62
Belfast		
Birmingham	73	63
Cardiff	73	62
Edinburgh	68	61
Glasgow	68	61
London	76	65
URUGUAY		
Montevideo	85	71
VENEZUELA		
Caracas	81	69
Maracaibo	95	83
VIET NAM		
Da Nang	93	85
Hanoi	95	84
Saigon	89	83
YUGOSLAVIA		
Belgrade	86	72

The dry bulb and wet bulb temperatures represent values which have been equalled or exceeded by 5% of the total hours during the months of June through September in the northern hemisphere and the months December through March in the southern hemisphere.

The data for Canadian stations are based on the month of July only.

AP = airport AFB = air force base CO = urban offices

Reprinted by permission of the American Society of Heating, Refrigerating and Air-Conditioning Engineers, Atlanta, Georgia, from the 1993 ***ASHRAE Handbook—Fundamentals.***

FIG. 11-4

Cooling System Characteristics

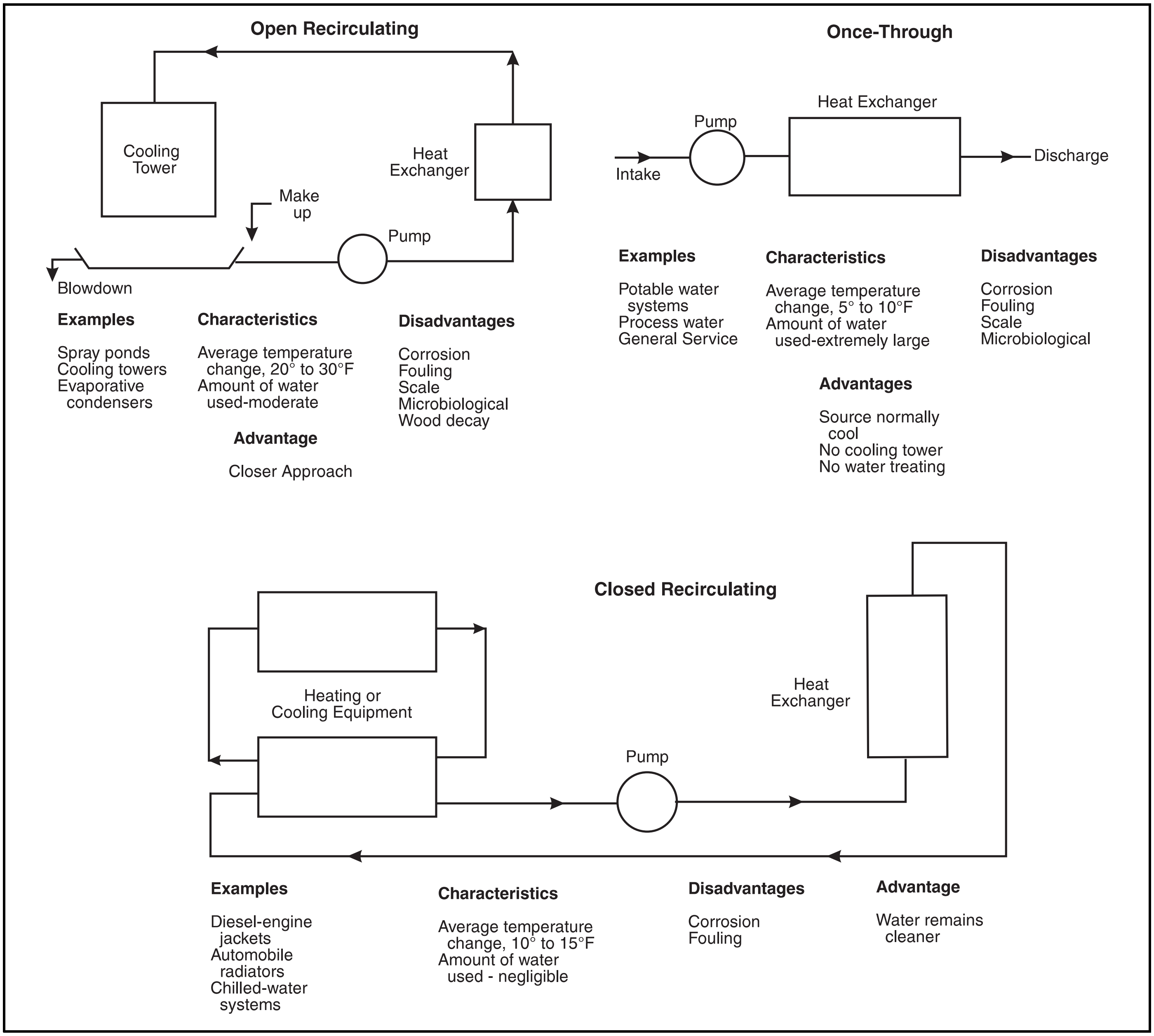

Typical windage losses, expressed as percentages of the total system water circulation rate, for different evaporative equipment are as follows:

Spray ponds	1.0 to 5.0%
Atmospheric-draft towers	0.3 to 1.0%
Mechanical-draft towers	0.1 to 0.3%

Tower Location

Local heat sources upwind of the cooling tower can elevate the wet-bulb temperature of the air entering the tower. Interference occurs when a portion of the saturated air upwind of the tower contaminates the ambient air of a downwind tower. Drift and condensed water can cause corrosion problems with downwind equipment.

PERFORMANCE CHARACTERISTICS

The performance characteristics of various types of towers will vary with height, fill configuration, and flow arrangement — crossflow or counterflow; however, these factors have been taken into consideration in preparation of the Performance Characteristic Nomograph Fig. 11-5. When accurate characteristics of a specific tower are required, the cooling tower manufacturer should be consulted.

Performance tests on a cooling tower should be done in accordance with the Cooling Tower Institute (CTI) Acceptance

Example 11-1 — Effect of Varying WB Temperature on Cold Water Temperature (CWT).

What is new CWT when WB changes from 75° to 60° with gpm and range remaining constant?

Enter Nomograph at 85° CWT, go horizontally to 75° WB, then vertically down to 60° WB, read new CWT of 76°.

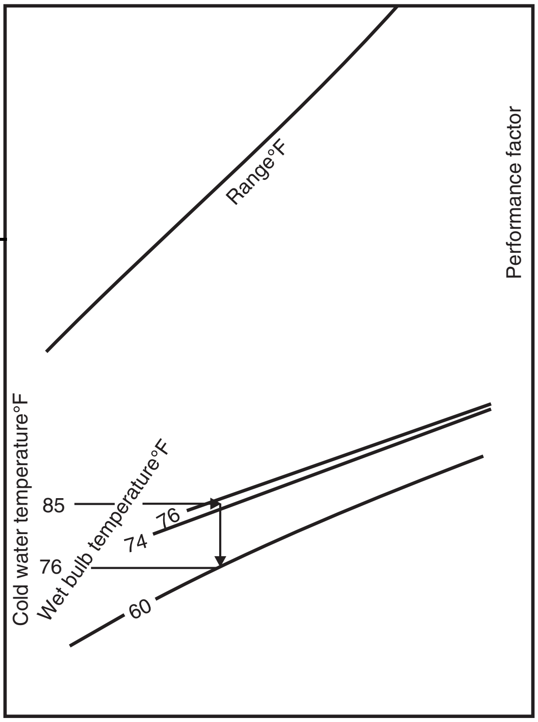

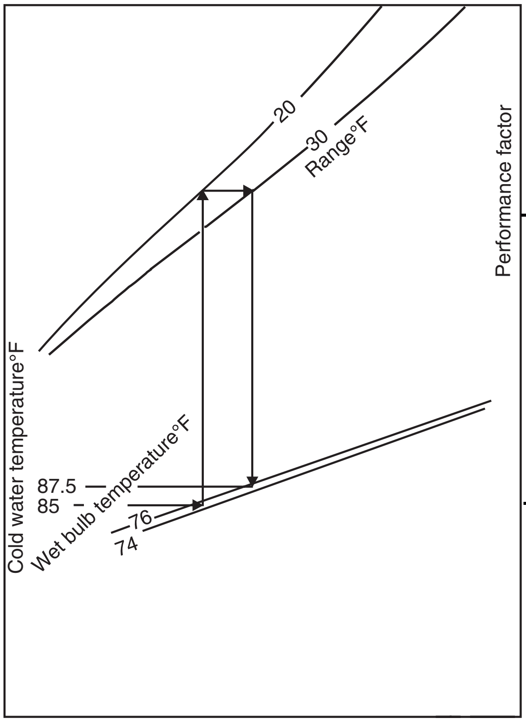

Example 11-2 — Effect of Varying Cooling Range on Cold Water Temperature.

What is new CWT when cooling range is changed from 20° to 30° (50% increase in heat load) with gpm and WB held constant?

Enter Nomograph at 85° CWT, go horizontally to 75° WB, vertically to 20° R, horizontally to 30° R, vertically downward to 75° WB, read new CWT 87.5°.

Example 11-3 — Effect of Varying Water Circulating Rate and Heat Load on Cold Water Temperature.

What is new CWT when water circulation is changed from 1000 gpm to 1500 gpm (50% change in heat load at constant Range). Varying water rate, particularly over wide ranges, may require modifications to the distribution system. Enter Nomograph at 85° CWT, go horizontally to 75° WB, vertically to 20° R, horizontally to Performance Factor of 3.1. Obtain new PF by multiplying (3.1) (1500/1000) = 4.65, then enter Nomograph at PF of 4.65, go horizontally to 20° R, vertically down to 75° WB, read new CWT 90.5°.

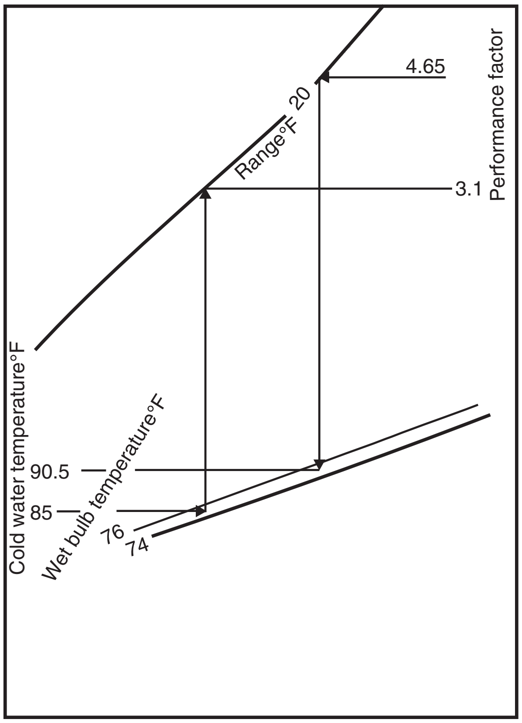

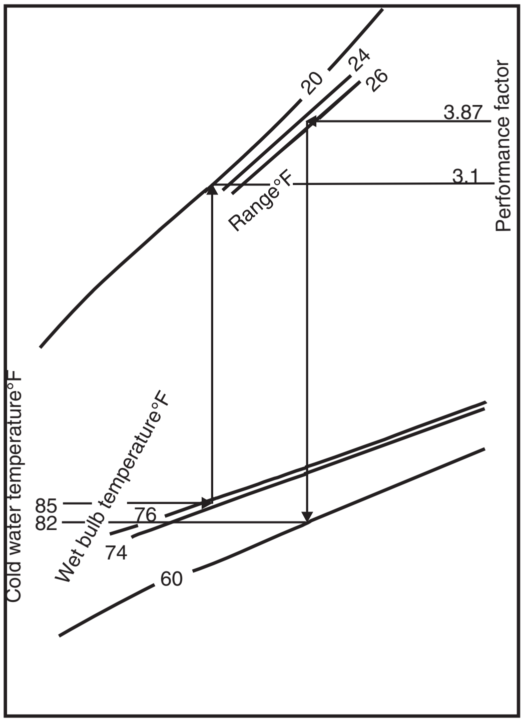

Example 11-4 — Effect of Varying WB Temperature, Range, and Water Circulating Rate on Cold Water Temperature.

What is new CWT when the WB changes from 75° to 60°, R changes from 20° to 25°, gpm changes from 1000 to 1250 (25% change in heat load.) Enter Nomograph at 85° CWT, go horizontally to 75° WB, vertically to 20° R, horizontally read PF 3.1 then multiply (3.1) (1250/1000) = 3.87 (new PF). Enter Nomograph at PF = 3.87, go horizontally to 25° R, vertically down to 60° WB, read 82° new CWT.

Example 11-5 — Effect of Varying Fan HP Input on Cold Water Temperature.

What is new CWT if motor is changed from 20 HP to 25 HP in Example 11-4? The air flow rate varies as the cube root of the horsepower and performance varies almost directly with the ratio of water rate to air rate, therefore the change in air flow rate can be applied to the Performance Factor. Increasing the air flow rate (by installing a larger motor) decreases the Performance Factor. PF correction factor = $(25\ \mathrm{HP}/20\ \mathrm{HP})^{1/3}$ = 1.077. Divide PF by PF correction factor to get new PF. Applying this to Example 11-4, we get 3.87/1.077 = 3.6. Enter Nomograph at 3.6 PF (instead of 3.87 PF) go horizontally to 25° R, vertically down to 60° WB, read 81° CWT.

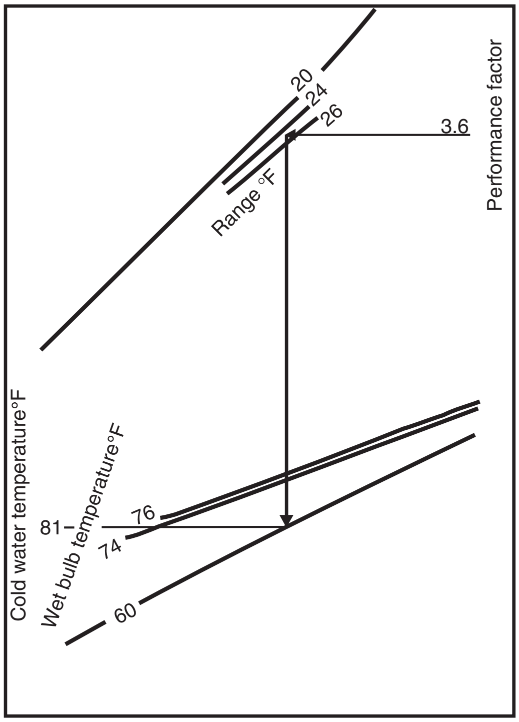

Test Code and the American Society of Mechanical Engineers (ASME) test code.

Examples

The use of the Nomograph is illustrated by the following examples covering typical changes in operating conditions.

Assume a cooling tower is operating at known conditions of:

Flow = 1000 gpm
Hot Water = 105°F
Cold Water = 85°F
Wet Bulb = 75°F

This is commonly referred to as 105-85-75 or 20° Range (105° – 85°) and 10° Approach (85° – 75°).

Example 11-6 — The correction factor shown in Example 11-5 could also be used to increase gpm instead of decreasing CWT, as was done in Example 11-5. In Example 11-4, we developed a new CWT of 82° when circulating 1250 gpm at 25° R and 60°WB. If motor HP is increased from 20 to 25 under these conditions with PF correction factor = 1.077 (as shown in Example 11-5), GPM could be increased from 1250 to (1250) (1.077) = 1346 gpm.

Example 11-7 — Calculate the concentrations and blowdown rate for the following cooling tower:

Circulation Rate = 10,000 gpm

Water Temperature Drop Through Tower = 20°F

Type of Tower = Mechanical Induced Draft

Blowdown Rate = 20 gpm, or 0.2% of circulation rate

Therefore:

Evaporation Loss = 2% (1% for each 10° temperature drop)

(all rates are based on a percent of circulation rate)

Windage Loss = 0.3% (maximum for mechanical draft tower, p. 11-2)

FIG. 11-5

Performance Characteristic Nomograph

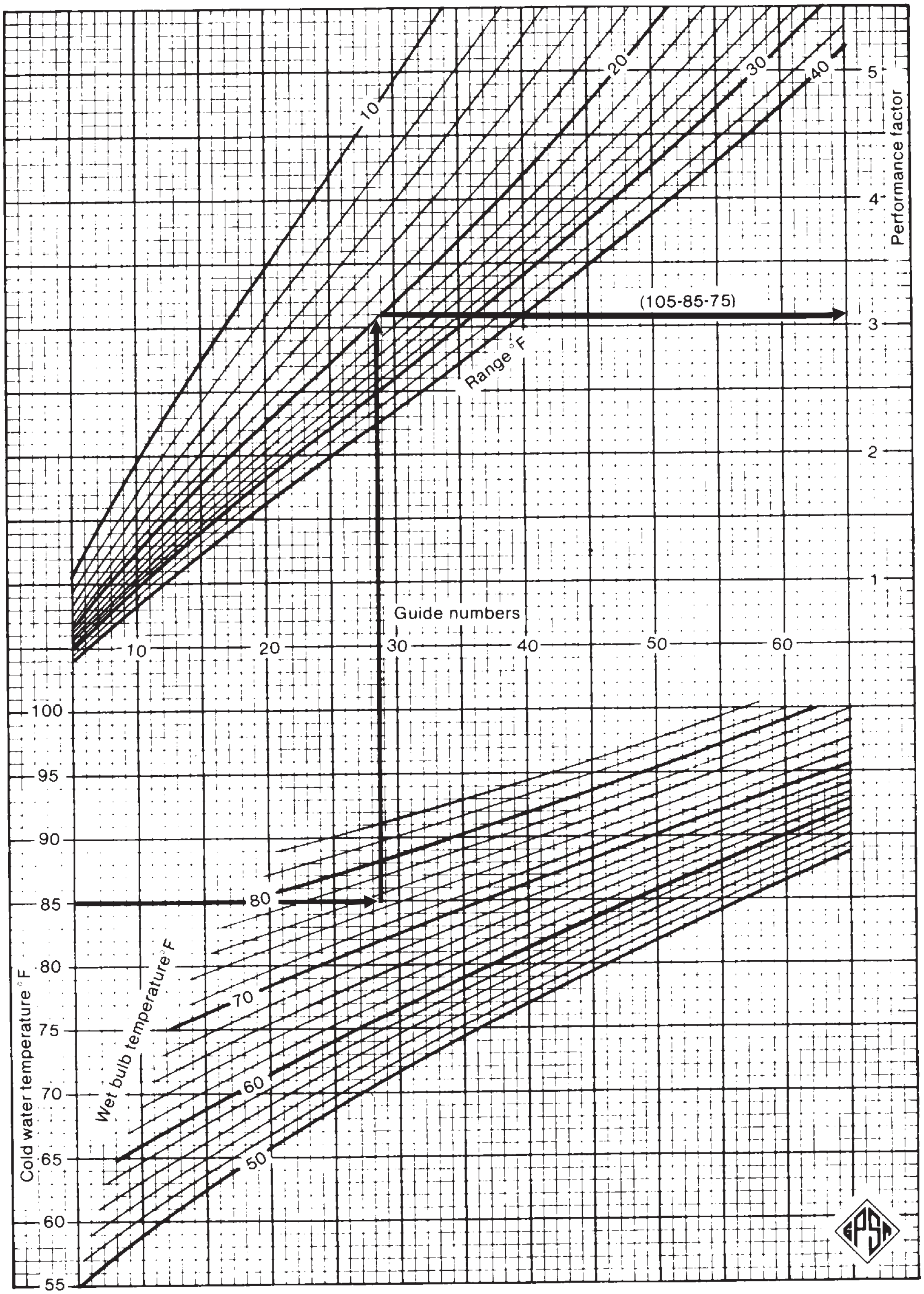

$$\text{Number of Concentrations (cycles)} = \frac{E + B}{B}$$

$$= \frac{2.0 + (0.2 + 0.3)}{(0.2 + 0.3)} = 5.0$$

If the resultant concentrations are excessive and a desired concentration of 4.0 is required, what must the blowdown rate be?

$$B = \frac{E}{\text{Cycles} - 1}$$

$$= \frac{2.0}{4.0 - 1} = 0.67\%$$

The windage component of B is 0.3%, therefore the blowdown rate required would be 0.67 – 0.3 = 0.37% or

(10,000 gpm) (0.0037) = 37 gpm

CONCENTRATION CYCLES

The concentration of compounds occurring in circulating water systems that can cause scaling or corrosion of equipment must be controlled at a desirable level. This concentration level, developed on each system, is based on the quality of makeup water and the water treating chemicals used to control corrosion or scaling. The concentration is usually reported as concentration cycles and refers to the number of times the compounds in the makeup water are concentrated in the blowdown water. For example, if the concentration in the makeup water were 125 ppm and the concentration of the blowdown were 563, the concentration cycles would be 563/125 or 4.5 cycles. The compounds are concentrated by the loss of water through evaporation and windage. The evaporation loss is based on the fact that 1,000 Btu are required to evaporate one (1) pound of water. The heat of evaporation is furnished by cooling the circulating water. One hundred (100) pounds of water must be cooled 10° to furnish this amount of heat, therefore, evaporation loss is 1% of tower circulation for each 10° temperature drop through the tower.

TYPES OF COOLING TOWERS

Cooling towers have two types of air flow: crossflow and counterflow. In crossflow towers, the air moves horizontally across the downward flow of water. In counterflow towers, the air moves vertically upward against the downward fall of the water.

There are many types and sizes of cooling towers:

Mechanical Draft Towers

Fans are used to move the air through the mechanical draft tower. The performance of the tower has a greater stability because it is affected by fewer psychrometric variables. The fans provide a means of regulating the air flow. Mechanical draft towers are characterized as either forced draft or induced draft.

Forced draft towers (Fig. 11-6) — The fan is located on the air stream entering the tower. This tower is characterized by high air entrance velocities and low exit velocities, therefore, the towers are susceptible to recirculation thus having a lower performance stability. The fans can also be subject to icing under conditions of low ambient temperature and high humidity.

FIG. 11-6

Mechanical Forced Draft Counterflow Tower

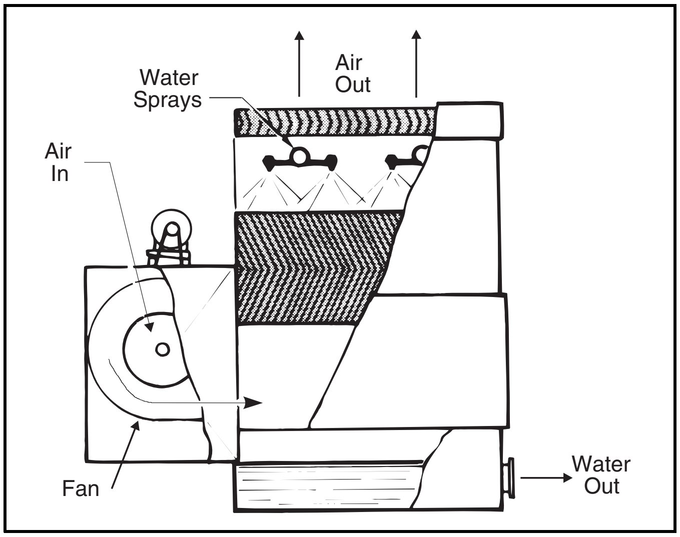

FIG. 11-7a

Mechanical Induced Draft Counterflow Tower

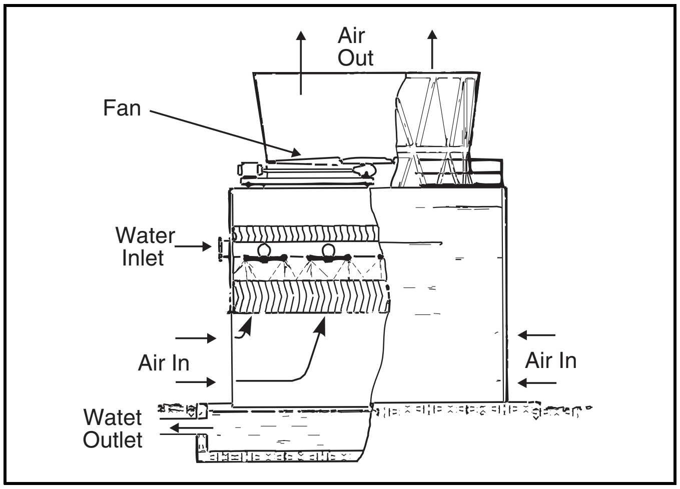

FIG. 11-7b

Mechanical Induced Draft Cross Flow Tower

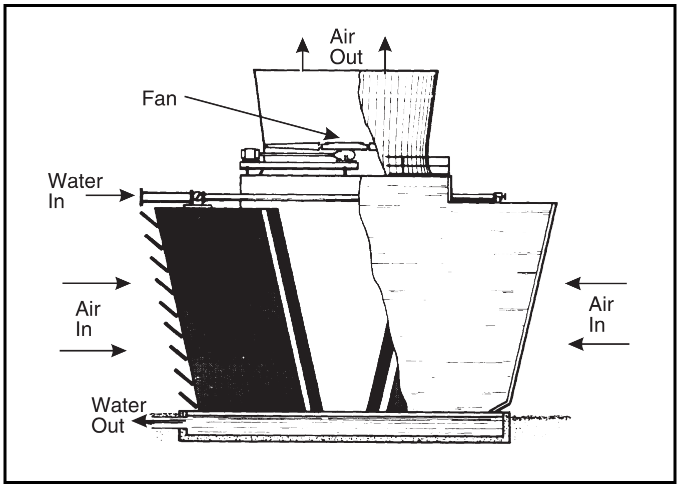

FIG. 11-8

Mechanical Draft Coil Shed Tower

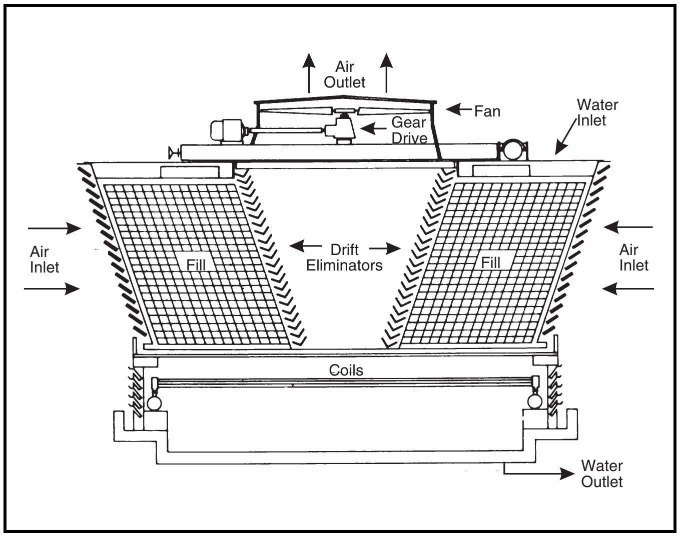

FIG. 11-9

Atmospheric Spray Tower

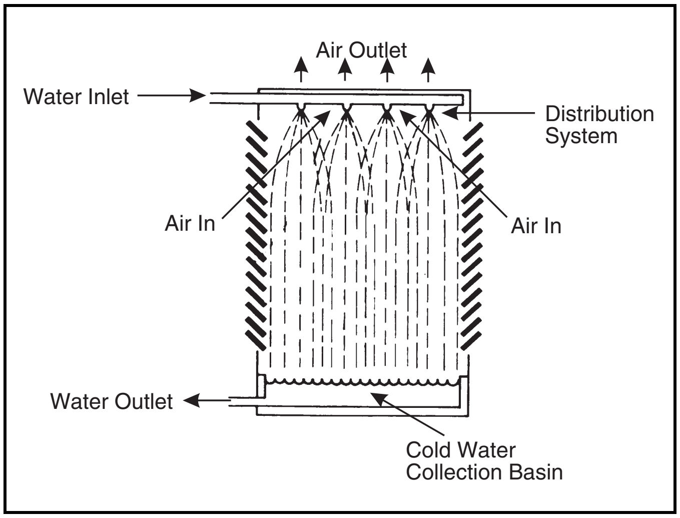

Induced draft towers (Fig. 11-7) — The fan is located on the air stream leaving the tower. This causes air exit velocities which are three to four times higher than their air entrance velocities. This improves the heat dispersion and reduces the potential for recirculation. Induced draft towers require about one (1) horsepower of input for every 8000 cfm of air.[3]

Coil shed towers (Fig. 11-8) — This application exists in many older cooling towers. The atmospheric coils or sections are located in the basin of the cooling tower. The sections are cooled by flooding the surface of the coils with cold water. Reasons for discontinued use were scaling problems, poor temperature control, and construction costs. This type tower can exist both as mechanical or natural draft.

FIG. 11-10

Hyperbolic Natural Draft Tower

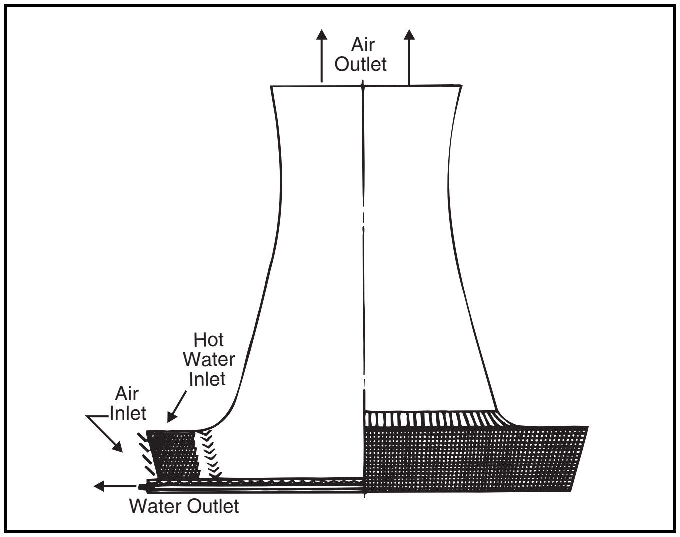

Natural Draft Towers

Atmospheric spray towers (Fig. 11-9) — Cooling towers of this type are dependent upon atmospheric conditions. No mechanical devices are used to move the air. They are used when small sizes are required and when low performance can be tolerated.

Hyperbolic natural draft towers (Fig. 11-10) — These towers are extremely dependable and predictable in their thermal performance. A chimney or stack is used to induce air movement through the tower.

REFERENCES AND BIBLIOGRAPHY

1. American Society of Heating, Refrigerating and Air-Conditioning Engineers, "ASHRAE Handbook—Fundamentals," Table 1, Chapter 6, Atlanta, Georgia.
2. American Society of Heating, Refrigerating and Air-Conditioning Engineers, "ASHRAE Handbook—Fundamentals," Tables 1, 2 and 3, Chapter 24, Atlanta, Georgia.
3. Evans, Frank L., Jr., "Equipment Design Handbook for Refineries and Chemical Plants," 2nd ed., Gulf Publishing Company, Houston, Texas.

FIG. 11-11

Properties of Saturated Air[1]

Temp.	Humidity Ratio lbw/lb$_a$	Volume ft^3/lb dry air			Enthalpy Btu/lb dry air		
°F	W_s	v_a	v_{as}	v_s	h_a	h_{as}	h_s
–80	0.0000049	9.553	0.000	9.553	–19.221	0.005	–19.215
–78	0.0000057	9.604	0.000	9.604	–18.740	0.006	–18.734
–76	0.0000067	9.655	0.000	9.655	–18.259	0.007	–18.252
–74	0.0000078	9.705	0.000	9.705	–17.778	0.008	–17.770
–72	0.0000090	9.756	0.000	9.756	–17.298	0.010	–17.288
–70	0.0000104	9.807	0.000	9.807	–16.817	0.011	–16.806
–68	0.0000120	9.857	0.000	9.858	–16.336	0.013	–16.324
–66	0.0000139	9.908	0.000	9.908	–15.856	0.015	–15.841
–64	0.0000160	9.959	0.000	9.959	–15.375	0.017	–15.359
–62	0.0000184	10.009	0.000	10.010	–14.895	0.019	–14.876
–60	0.0000212	10.060	0.000	10.060	–14.414	0.022	–14.392
–58	0.0000243	10.111	0.000	10.111	–13.933	0.025	–13.908
–56	0.0000279	10.161	0.000	10.162	–13.453	0.029	–13.424
–54	0.0000319	10.212	0.001	10.213	–12.972	0.033	–12.939
–52	0.0000365	10.263	0.001	10.263	–12.492	0.038	–12.454
–50	0.0000416	10.313	0.001	10.314	–12.011	0.043	–11.968
–48	0.0000475	10.364	0.001	10.365	–11.531	0.050	–11.481
–46	0.0000541	10.415	0.001	10.416	–11.050	0.056	–10.994
–44	0.0000615	10.465	0.001	10.466	–10.570	0.064	–10.505
–42	0.0000699	10.516	0.001	10.517	–10.089	0.073	–10.016
–40	0.0000793	10.567	0.001	10.568	–9.609	0.083	–9.526
–38	0.0000898	10.617	0.002	10.619	–9.128	0.094	–9.034
–36	0.0001017	10.668	0.002	10.670	–8.648	0.106	–8.541
–34	0.0001150	10.719	0.002	10.721	–8.167	0.120	–8.047
–32	0.0001298	10.769	0.002	10.772	–7.687	0.136	–7.551
–30	0.0001465	10.820	0.003	10.822	–7.206	0.154	–7.053
–28	0.0001650	10.871	0.003	10.873	–6.726	0.173	–6.553
–26	0.0001858	10.921	0.003	10.924	–6.245	0.195	–6.051
–24	0.0002088	10.972	0.004	10.976	–5.765	0.220	–5.545
–22	0.0002346	11.022	0.004	11.027	–5.284	0.247	–5.038
–20	0.0002632	11.073	0.005	11.078	–4.804	0.277	–4.527
–18	0.0002950	11.124	0.005	11.129	–4.324	0.311	–4.013
–16	0.0003303	11.174	0.006	11.180	–3.843	0.348	–3.495
–14	0.0003694	11.225	0.007	11.232	–3.363	0.390	–2.973
–12	0.0004128	11.276	0.007	11.283	–2.882	0.436	–2.447
–10	0.0004608	11.326	0.008	11.335	–2.402	0.487	–1.915
–8	0.0005139	11.377	0.009	11.386	–1.922	0.543	–1.378
–6	0.0005726	11.427	0.010	11.438	–1.441	0.606	–0.835
–4	0.0006373	11.478	0.012	11.490	–0.961	0.675	–0.286
–2	0.0007088	11.529	0.013	11.542	–0.480	0.751	0.271
0	0.0007875	11.579	0.015	11.594	0.0	0.835	0.835
2	0.0008742	11.630	0.016	11.646	0.480	0.928	1.408
4	0.0009695	11.680	0.018	11.699	0.961	1.030	1.991
6	0.0010743	11.731	0.020	11.751	1.441	1.143	2.584
8	0.0011895	11.782	0.022	11.804	1.922	1.266	3.188
10	0.0013158	11.832	0.025	11.857	2.402	1.402	3.804
12	0.0014544	11.883	0.028	11.910	2.882	1.550	4.433
14	0.0016062	11.933	0.031	11.964	3.363	1.714	5.077
16	0.0017724	11.984	0.034	12.018	3.843	1.892	5.736
18	0.0019543	12.035	0.038	12.072	4.324	2.088	6.412
20	0.0021531	12.085	0.042	12.127	4.804	2.303	7.107
22	0.0023703	12.136	0.046	12.182	5.285	2.537	7.822
24	0.0026073	12.186	0.051	12.237	5.765	2.793	8.558
26	0.0028660	12.237	0.056	12.293	6.246	3.073	9.318
28	0.0031480	12.287	0.062	12.349	6.726	3.378	10.104
30	0.0034552	12.338	0.068	12.406	7.206	3.711	10.917
32	0.003790	12.389	0.075	12.464	7.687	4.073	11.760
34	0.004109	12.439	0.082	12.521	8.167	4.420	12.587
36	0.004452	12.490	0.089	12.579	8.648	4.793	13.441
38	0.004820	12.540	0.097	12.637	9.128	5.194	14.322
40	0.005216	12.591	0.105	12.696	9.609	5.624	15.233
42	0.005640	12.641	0.114	12.756	10.089	6.086	16.175
44	0.006094	12.692	0.124	12.816	10.570	6.582	17.152
46	0.006581	12.743	0.134	12.877	11.050	7.114	18.164
48	0.007103	12.793	0.146	12.939	11.531	7.684	19.215
50	0.007661	12.844	0.158	13.001	12.012	8.295	20.306
52	0.008259	12.894	0.171	13.065	12.492	8.949	21.441
54	0.008897	12.945	0.185	13.129	12.973	9.648	22.621
56	0.009580	12.995	0.200	13.195	13.453	10.397	23.850
58	0.010309	13.046	0.216	13.262	13.934	11.197	25.131
60	0.011087	13.096	0.233	13.329	14.415	12.052	26.467
62	0.011919	13.147	0.251	13.398	14.895	12.966	27.862
64	0.012805	13.198	0.271	13.468	15.376	13.942	29.318
66	0.013750	13.248	0.292	13.540	15.856	14.983	30.840
68	0.014758	13.299	0.315	13.613	16.337	16.094	32.431
70	0.015832	13.349	0.339	13.688	16.818	17.279	34.097
72	0.016976	13.400	0.365	13.764	17.299	18.543	35.841
74	0.018194	13.450	0.392	13.843	17.779	19.889	37.668
76	0.019491	13.501	0.422	13.923	18.260	21.323	39.583
78	0.020871	13.551	0.453	14.005	18.741	22.851	41.592
80	0.022340	13.602	0.487	14.089	19.222	24.479	43.701
82	0.023902	13.653	0.523	14.175	19.702	26.211	45.913
84	0.025563	13.703	0.561	14.264	20.183	28.055	48.238
86	0.027329	13.754	0.602	14.356	20.664	30.017	50.681
88	0.029208	13.804	0.646	14.450	21.145	32.105	53.250
90	0.031203	13.855	0.692	14.547	21.626	34.325	55.951
92	0.033323	13.905	0.742	14.647	22.107	36.687	58.794
94	0.035577	13.956	0.795	14.751	22.588	39.199	61.787
96	0.037972	14.006	0.852	14.858	23.069	41.871	64.940
98	0.040516	14.057	0.912	14.969	23.550	44.711	68.260
100	0.043219	14.107	0.976	15.084	24.031	47.730	71.761
102	0.046090	14.158	1.045	15.203	24.512	50.940	75.452
104	0.049140	14.208	1.118	15.326	24.993	54.354	79.346
106	0.052383	14.259	1.196	15.455	25.474	57.986	83.460
108	0.055826	14.309	1.279	15.588	25.955	61.844	87.799
110	0.059486	14.360	1.367	15.727	26.436	65.950	92.386
112	0.063378	14.411	1.462	15.872	26.917	70.319	97.237
114	0.067512	14.461	1.562	16.023	27.398	74.964	102.362
116	0.071908	14.512	1.670	16.181	27.879	79.906	107.786
118	0.076586	14.562	1.784	16.346	28.361	85.169	113.530
120	0.081560	14.613	1.906	16.519	28.842	90.770	119.612
122	0.086860	14.663	2.037	16.700	29.323	96.742	126.065
124	0.092500	14.714	2.176	16.890	29.805	103.102	132.907
126	0.098504	14.764	2.325	17.090	30.286	109.877	140.163
128	0.104910	14.815	2.485	17.299	30.767	117.111	147.878
130	0.111738	14.865	2.655	17.520	31.249	124.828	156.076
132	0.119023	14.916	2.837	17.753	31.730	133.066	164.796
134	0.126804	14.966	3.033	17.999	32.212	141.873	174.084
136	0.135124	15.017	3.242	18.259	32.693	151.294	183.987
138	0.144019	15.067	3.467	18.534	33.175	161.374	194.548
140	0.153538	15.118	3.708	18.825	33.656	172.168	205.824
142	0.163748	15.168	3.967	19.135	34.138	183.754	217.892
144	0.174694	15.219	4.245	19.464	34.620	196.183	230.802
146	0.186460	15.269	4.545	19.815	35.101	209.550	244.651
148	0.199110	15.320	4.869	20.189	35.583	233.932	259.514
150	0.212730	15.370	5.218	20.589	36.064	239.426	275.490
152	0.227429	15.421	5.596	21.017	36.546	256.158	292.705
154	0.243309	15.471	6.005	21.477	37.028	274.245	311.273
156	0.260512	15.522	6.450	21.972	37.510	293.849	331.359
158	0.279166	15.572	6.933	22.505	37.992	315.120	353.112
160	0.29945	15.623	7.459	23.082	38.474	338.263	376.737
162	0.32156	15.673	8.034	23.707	38.956	363.501	402.457
164	0.34572	15.724	8.664	24.388	39.438	391.095	430.533
166	0.37220	15.774	9.355	25.129	39.920	421.352	461.271
168	0.40131	15.825	10.117	25.942	40.402	454.630	495.032
170	0.43343	15.875	10.959	26.834	40.884	491.372	532.256
172	0.46905	15.926	11.894	27.820	41.366	532.138	573.504
174	0.50867	15.976	12.937	28.913	41.848	577.489	619.337
176	0.55294	16.027	14.103	30.130	42.331	628.197	670.528
178	0.60274	16.078	15.418	31.496	42.813	685.260	728.073
180	0.65911	16.128	16.909	33.037	43.295	749.871	793.166
182	0.72331	16.178	18.609	34.787	43.778	823.487	867.265
184	0.79703	16.229	20.564	36.793	44.260	908.061	952.321
186	0.88251	16.280	22.834	39.113	44.742	1006.149	1050.892
188	0.98272	16.330	25.498	41.828	45.225	1121.174	1166.399
190	1.10154	16.381	28.661	45.042	45.707	1257.614	1303.321
192	1.24471	16.431	32.477	48.908	46.190	1422.047	1468.238
194	1.42029	16.481	37.161	53.642	46.673	1623.758	1670.430
196	1.64070	16.532	43.046	59.578	47.155	1877.032	1924.188
198	1.92472	16.583	50.636	67.218	47.638	2203.464	2251.102
200	2.30454	16.633	60.793	77.426	48.121	2640.084	2688.205

Reprinted by permission of the American Society of Heating, Refrigerating and Air-Conditioning Engineers, Atlanta, GA, from the 1993 ***ASHRAE Handbook—Fundamentals.***

NOTES:

SECTION 12

Pumps & Hydraulic Turbines

Pumps

The most common types of pumps used in gas processing plants are centrifugal and positive displacement. Occasionally regenerative turbine pumps, axial-flow pumps, and ejectors are used.

Modern practice is to use centrifugal rather than positive displacement pumps where possible because they are usually less costly, require less maintenance, and less space. Conventional centrifugal pumps operate at speeds between 1200 and 8000 rpm. Very high speed centrifugal pumps, which can operate

FIG. 12-1

Nomenclature

A = cross-sectional area of plunger, piston, or pipe, sq in.
a = cross-sectional area of piston rod, sq in.
AC = alternating current
bbl = barrel (42 U.S. gallons)
bhp = brake horsepower
C = constant (Fig. 12-19)
C_p = specific heat at average temperature, Btu/(lb • °F)
cfs = cu ft/sec
D = displacement of reciprocating pump, gpm
DC = direct current
d = impeller diameter, in.
e = pump efficiency, fraction
g = 32.2 ft/sec^2 (acceleration of gravity)
gpm = U.S. gallons/minute
H = total equipment head, ft of fluid
h = head, ft of fluid pumped
hyd hp = hydraulic horsepower
k = factor related to fluid compressibility (Fig. 12-16)
K = type of pump factor (Eq. 12-18)
L = length of suction pipe, ft
L_s = stroke length, in.
m = number of plungers or pistons
NPSH = net positive suction head of fluid pumped, ft
NPSHA = NPSH available, ft
NPSHR = NPSH required, ft
n = speed of rotation, revolutions/minute (rpm)
n_s = specific speed (See Fig. 12-2 for units)
N = Polytropic exponent of charge gas. (For nitrogen, N = 1.4)
ΔP = differential pressure, psi
P = pressure, psia or psig
P_{vp} = liquid vapor pressure at pumping temperature, psia
psi = lb/sq in.
psia = lb/sq in. absolute
psig = lb/sq in. gauge
Q = rate of liquid flow, gpm
r = ratio of internal volume of fluid between valves, when the piston or plunger is at the end of the suction stroke, to the piston or plunger displacement.
RD = relative density to water at standard temperature
s = slip or leakage factor for reciprocating and rotary pumps
S = suction specific speed (units per Eq 12-7)
sp gr = specific gravity at average flowing conditions. Equal to RD
T = torque, ft lb
t_r = temperature rise, °F
u = impeller peripheral velocity, ft/sec
VE = volumetric efficiency, fraction
VE_o = overall volumetric efficiency
VE_ρ = volumetric efficiency due to density change
VE_l = volumetric efficiency due to leakage
V_{pd} = pulsation dampener volume, in^3
v = liquid mean velocity at a system point, ft/sec
z = elevation of a point of the system above (+) or below (–) datum of the pump. For piping, the elevation is from the datum to the piping centerline; for vessels and tanks, the elevation is from the datum to the liquid level.

Greek:

ρ = density at average flowing conditions, lb/ft^3
ρ_i = inlet density, lb/ft^3
ρ_o = outlet density, lb/ft^3
Δ = allowable pressure fluctuations as a percentage of mean pressure

Subscripts:

a = acceleration
ave = with P, average pressure in pulsating flow
bep = best efficiency point, for maximum impeller diameter
c = compression
d = discharge of pump
dv = discharge vessel
D = displacement
f = friction
i = inlet of equipment
l = leakage
max = with P, maximum acceptable peak pressure in pulsating flow
min = with P, minimum acceptable valley pressure in pulsating flow
o = outlet of equipment
ov = overall
p = pressure
r = rise

FIG. 12-1 (Cont'd)

Nomenclature

s = static, suction of pump, specific, or stroke
sv = suction vessel
v = velocity
vp = vapor pressure
w = water
x = point x in the system
y = point y in the system
1 = impeller diameter or speed 1
2 = impeller diameter or speed 2

Alignment: The straight line relation between the pump shaft and the driver shaft.

Casing, Axially Split: A pump case split parallel to the pump shaft.

Casing, Radially Split: A pump case split transverse to the pump shaft.

Cavitation: A phenomenon that may occur along the flow path in a pump when the absolute pressure equals the liquid vapor pressure at flowing temperature. Bubbles then form which later implode when the pressure rises above the liquid vapor pressure.

Coupling: A device for connecting the pump shaft to the driver shaft consisting of the pump shaft hub and driver shaft hub, usually bolted together.

Coupling, Spacer: A cylindrical piece installed between the pump shaft coupling hub and driver shaft coupling hub, to provide space for removal of the mechanical seal without moving the driver.

Cutwater: The point of minimum volute cross-sectional area, also called the volute tongue.

Datum Elevation: The reference horizontal plane from which all elevations and heads are measured. The pumps standards normally specify the datum position relative to a pump part, e.g. the impeller shaft centerline for centrifugal horizontal pumps.

Diffuser: Pump design in which the impeller is surrounded by diffuser vanes where the gradually enlarging passages change the liquid velocity head into pressure head.

Displacement: The calculated volume displacement of a positive displacement pump with no slip losses.

Double Acting: Reciprocating pump in which liquid is discharged during both the forward and return stroke of the piston.

Duplex: Pump with two plungers or pistons.

Efficiency, Mechanical: The ratio of the pump hydraulic power output to pump power input.

Efficiency, Volumetric: The ratio of the pump suction or discharge capacity to pump displacement.

Head: The flowing liquid column height equivalent to the flowing liquid energy, of pressure, velocity or height above the datum, whose sum is the total head. Also used to express changes of energy such as the friction losses, the equipment total head and the acceleration head.

Head, Acceleration: The head equivalent to the pressure change due to changes in velocity in the piping system.

HPRT: Hydraulic power recovery turbine.

Impeller: The bladed member of the rotating assembly of a centrifugal pump which imparts the force to the liquid.

NPSHA: The total suction absolute head, at the suction nozzle, referred to the standard datum, minus the liquid vapor absolute pressure head, at flowing temperature available for a specific application. For reciprocating pumps it includes the acceleration head. NPSHA depends on the system characteristics, liquid properties and operating conditions.

NPSHR: The minimum total suction absolute head, at the suction nozzle, referred to the standard datum, minus the liquid vapor absolute pressure head, at flowing temperature, required to avoid cavitation. For positive displacement pumps it includes internal acceleration head and losses caused by suction valves and effect of springs. It does not include system acceleration head. NPSHR depends on the pump characteristics and speed, liquid properties and flow rate and is determined by vendor testing, usually with water.

Pelton Wheel: A turbine runner which turns in reaction to the impulse imparted by a liquid stream striking a series of buckets mounted around a wheel.

Recirculation Control: Controlling the quantity of flow through a pump by recirculating discharge liquid back to suction.

Rotor: The pump or power recovery turbine shaft with the impeller(s) mounted on it.

Rotor, Francis-type: A reverse running centrifugal pump impeller, used in a hydraulic power recovery turbine, to convert pressure energy into rotational energy.

Run-out: The point at the end of the head-capacity performance curve, indicating maximum flow quantity and usually maximum brake horsepower.

Runner: The shaft mounted device in a power recovery turbine which converts liquid pressure energy into shaft power.

Shut-off: The point on the pump curve where flow is zero, usually the point of highest total dynamic head.

Simplex: Pump with one plunger or piston.

Single Acting: Reciprocating pump in which liquid is discharged only during the forward stroke of the piston.

Slip: The quantity of fluid that leaks through the internal clearances of a positive displacement pump per unit of time. Sometimes expressed on a percentage basis.

Surging: A sudden, strong flow change often causing excessive vibration.

Suction, Double: Liquid enters on both sides of the impeller.

Suction, Single: Liquid enters one side of the impeller.

Throttling: Controlling the quantity of flow by reducing the cross-sectional flow area, usually by partially closing a valve.

Triplex: Pump with three plungers or pistons.

Vanes, Guide: A series of angled plates (fixed or variable) set around the circumference of a turbine runner to control the fluid flow.

Volute, Double: Spiral type pump case with two cutwaters 180° apart, dividing the flow into two equal streams.

Volute, Single: Spiral type pump case with a single cutwater to direct the liquid flow.

Vortex Breaker: A device used to avoid vortex formation in the suction vessel or tank which, if allowed, would cause vapor entrainment in the equipment inlet piping.

---

up to 23,000 rpm and higher, are used for low-capacity, high-head applications. Most centrifugal pumps will operate with an approximately constant head over a wide range of capacity.

Positive displacement pumps are either reciprocating or rotary. Reciprocating pumps include piston, plunger, and diaphragm types. Rotary pumps are: single lobe, multiple lobe, rotary vane, progressing cavity, and gear types. Positive displacement pumps operate with approximately constant capacities over wide variations in head, hence they usually are installed for services which require high heads at moderate capacities. A special application of small reciprocating pumps in gas processing plants is for injection of fluids (e.g. methanol and corrosion inhibitors) into process streams, where their constant-capacity characteristics are desirable.

Axial-flow pumps are used for services requiring very high capacities at low heads. Regenerative-turbine pumps are used for services requiring small capacities at high heads. Ejectors are used to avoid the capital cost of installing a pump, when a suitable motive fluid (frequently steam) is available, and are usually low-efficiency devices. These kinds of pumps are used infrequently in the gas+processing industry.

Fig. 12-1 provides a list of symbols and terms used in the text and also a glossary of terms used in the pump industry. Fig. 12-2 is a summary of some of the more useful pump equations. Fig. 12-3 provides guidance in selecting the kinds of pumps suitable for common services.

EQUIPMENT AND SYSTEM EQUATIONS

The energy conservation equation for pump or hydraulic turbine systems comes from Bernoulli's Theorem and relates the total head in two points of the system, the friction losses between these points and the equipment total head. Elevations are measured from the equipment datum.

The total head at any system point is:

$$h = z + h_p + h_v = z + \frac{2.31 \bullet P}{\text{sp gr}} + \frac{v^2}{2 \bullet g} \qquad \textbf{Eq 12-1}$$

The system friction head is the inlet system friction head plus the outlet system friction head:

$$h_f = h_{fx} + h_{fy} \qquad \textbf{Eq 12-2}$$

The equipment total head is the outlet nozzle total head minus the inlet nozzle total head:

$$H = h_o - h_i = z_o - z_i + \frac{2.31\,(P_o - P_i)}{\text{sp gr}} + \frac{v_o^2 - v_i^2}{2 \bullet g} \qquad \textbf{Eq 12-3}$$

When the elevation and size of inlet and outlet nozzles are the same, the equipment total head (H) equals the difference of pressure heads. H is positive for pumps and negative for HPRTs.

When using any suction-and-discharge-system points the following general equation applies:

$$z_x + \frac{2.31 \bullet P_x}{\text{sp gr}} + \frac{v_x^2}{2 \bullet g} - h_{fx} + H = z_y + \frac{2.31 \bullet P_y}{\text{sp gr}} + \frac{v_y^2}{2 \bullet g} + h_{fy}$$

Eq 12-4

When the points are located in tanks, vessels or low velocity points in the piping, the velocity head is normally negligible, but may not be negligible in equipment nozzles. Note that the subscripts "i" and "o" are used for variables at pumps and HPRTs inlet and outlet nozzles, respectively, while the subscripts "s" and "d" are used only for variables at pumps suction and discharge nozzles. The subscripts "x" and "y" are used for variables at points in each inlet and outlet subsystem and usually are suction and discharge vessels. Also "x" and "y" are used for friction head from point "x" to equipment inlet nozzle and from equipment outlet nozzle to point "y".

The work done in compressing the liquid is negligible for practically incompressible liquids and it is not included in above equations. To evaluate the total head more accurately when handling a compressible liquid, the compression work should be included. If a linear relationship between density and pressure is assumed, the liquid compression head that substitutes for the difference of pressure heads in the above equations is:

$$H_c = 1.155\,(P_o - P_i)\left[\frac{1}{\text{sp gr}_o} + \frac{1}{\text{sp gr}_i}\right] \qquad \textbf{Eq. 12-5}$$

When the differential pressure is sufficiently high to have a density change of more than 10%, or when the pressure is near the fluid's critical pressure, the change in fluid density and other properties with pressure is not linear. In these cases, Equations 12-3 to 12-5 may not be accurate. A specific fluid properties relationship model is required in this case. For pure substances, a pressure-enthalpy-entropy chart may be used for estimating purposes by assuming an isentropic process. The pump manufacturer should be consulted for the real process, including the equipment efficiency, heat transfer, etc. to determine the equipment performance.

NET POSITIVE SUCTION HEAD

See NPSH definition in Fig. 12-1. There should be sufficient net positive suction head available (NPSHA) for the pump to work properly, without cavitation, throughout its expected capacity range. Usually a safety margin of about 2 to 3 ft. of NPSHA above NPSHR is adequate. Cavitation causes noise, impeller damage, and impaired pump performance. Consideration must also be given to any dissolved gases which may affect vapor pressure. For a given pump, NPSHR increases with increasing flow rate. If the pump suction nozzle pressure is known

$$\text{NPSHA} = \frac{2.31 \bullet (P_i - P_{vp})}{\text{sp gr}} + z_i + \frac{v_i^2}{2 \bullet g} \qquad \textbf{Eq 12-6a}$$

FIG. 12-2

Common Pump Equations

FLOW RATE						
Given ⇒ multiply by to get ⇓	ft^3/sec	bbl/day	bbl/h	UK gal./min	m^3/h	lb/h
US gal./min	449	0.0292	0.700	1.2009	4.40	1/(500 • sp gr)

PRESSURE							
Given ⇒ multiply by to get ⇓	kPa	ft water at 39.2°F	m water at 0°C	ft liquid	bar	* std atm 760 mm Hg at 0°C	kgf/cm^2
lb/in^2	0.145	0.4335	1.422	sp gr / 2.31	14.5038	14.6959	14.2233

DENSITY						
Given ⇒ multiply by to get ⇓	kg/m^3	lb/US gal	lb/UK gal	kg/lt	API gravity	Baumé gravity
lb/ft^3	0.062428	7.48047	6.22884	62.428	See Fig. 1-3	

$$h_p = \frac{144 \cdot P}{\rho} = \frac{2.31 \cdot P}{sp\ gr}$$

$$h_v = \frac{v^2}{2 \cdot g}$$

$$u = \frac{(d)(n)}{229}$$

$$v = \frac{(Q)\ (0.321)}{A}$$

1 HP = 0.7457 kW
= 550 ft • lbf/s
= 33,000 ft • lbf/min

$$\text{hyd hp} = \frac{Q \cdot H \cdot sp\ gr}{3{,}960} = \frac{Q \cdot \Delta P}{1{,}714}\ ^{**}$$

$$\text{bhp} = \frac{\text{hyd hp}}{e}\ \text{(for pumps)}$$

bhp = hyd hp • e (for turbines)

sp gr = specific gravity

Water density at 60°F = 62.37 lb/ft^3
Standard gravity acceleration:
$g = 9.80665\ m/s^2 = 32.1740\ ft/s^2$

$$\text{bhp} = \frac{Q \cdot H \cdot sp\ gr}{(3{,}960)(e)} = \frac{Q \cdot \Delta P}{1{,}714 \cdot e}\ ^{**}\ \text{(for pumps)}$$

$$T = \frac{(bhp)(5252)}{n}$$

$$n_s = \frac{n \cdot \sqrt{Q_{bep}}}{(H_{bep})^{3/4}} = \frac{n \cdot H_{bep}^{1/4} \cdot \sqrt{Q_{bep}}}{H_{bep}}$$

See Fig. 1-7 for viscosity relationships
*Standard atmospheric pressure:
1 atm = 760 mm Hg = 101.325 kPa = 14.696 psi
**See Eq. 12-3 and 12-4.

CENTRIFUGAL PUMPS AFFINITY LAWS			
1: Values at initial conditions 2: Values at new conditions			
CHANGE ⇒	**SPEED**	**DIAMETER**	**SPEED AND DIAMETER**
Q_2 =	$Q_1\ (n_2/n_1)$	$Q_1\ (d_2/d_1)$	$Q_1\ (d_2/d_1)\ (n_2/n_1)$
h_2 =	$h_1\ (n_2/n_1)^2$	$h_1\ (d_2/d_1)^2$	$h_1\ [(d_2/d_1)\ (n_2/n_1)]^2$
bhp_2 =	$bhp_1\ (n_2/n_1)^3$	$bhp_1\ (d_2/d_1)^3$	$bhp_1\ [(d_2/d_1)\ (n_2/n_1)]^3$
$NPSHR_2$ =	$NPSHR_1\ (n_2/n_1)^2$	—	$NPSHR_1\ (n_2/n_1)^2$

FIG. 12-3

Pump Selection Guide

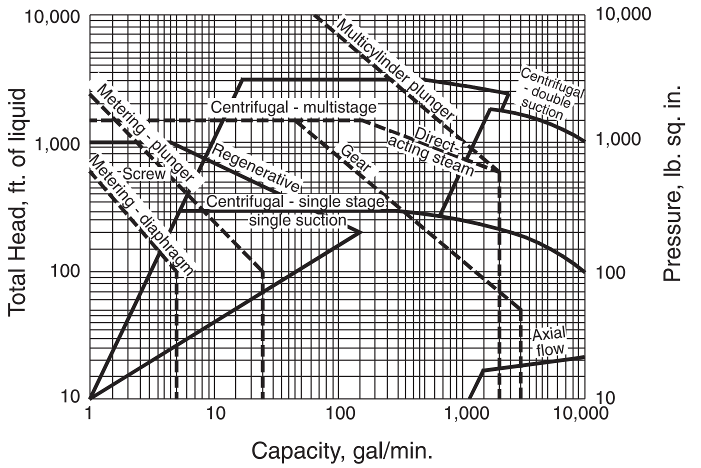

Pump coverage chart based on normal ranges of operation of commercially available types.
Solid lines - use left ordinate, head scale. Broken lines - use right ordinate, pressure scale.

Courtesy of McGraw Hill Publishing Company

When the pump suction nozzle pressure is not known, but the pressure at any point (x) of the suction system is known, NPSHA may be calculated with the following equation, where h_{fx} is the head friction loss from the point x to the suction nozzle. With commonly used suction pipe diameters, the velocity head may be negligible.

$$\text{NPSHA} = \frac{2.31 \bullet (P_x - P_{vp})}{\text{sp gr}} + z_x + \frac{v_x^2}{2 \bullet g} - h_{fx} \qquad \textbf{Eq 12-6b}$$

Moreover, when the suction system point is the specific case of the suction vessel, the equation is the following, where h_{fv} is the head friction loss from the suction vessel to the suction nozzle.

$$\text{NPSHA} = \frac{2.31 \bullet (P_{sv} - P_{vp})}{\text{sp gr}} + z_{sv} - h_{fsv} \qquad \textbf{Eq 12-6c}$$

The pressures in the above equations must be both absolute or gage; when using gage pressure both must be relative to the same atmospheric pressure. To convert a system pressure gage reading to absolute pressure add the existing local atmospheric pressure. The fluid vapor pressure must be at operating temperature. If the fluid vapor pressure is given in gage pressure, check which atmospheric pressure is reported. The use of the true local atmospheric pressure is very important in the cases of high altitude locations, and of a close margin of NPSHA over the NPSHR.

The pressure shall be measured at the pipe or nozzle centerline height; otherwise, adequate correction shall be made. Pay special attention to large pipe or nozzle diameters and the elevation of gage attached to them, pole or panel mounted instrument elevation, and different density fluid in the instrument line, see Hydraulic Institute Standards.[5]

To avoid vapor formation in the suction system, there must also be a Net Positive Pipe Pressure (NPPP) along it. Therefore, for every suction line point and operating condition the line pressure, at the top of the pipe must be higher than the fluid vapor pressure, being the pressure determined taking in account the pipe elevation.

The entrained and dissolved air or gases in the pump suction affects the pump performance, both mechanically and hydraulically, especially when the suction nozzle pressure is smaller than the suction vessel pressure. In centrifugal pumps it causes the reduction of capacity and discharge pressure, because of the reduced overall density; and also, at low flow, the impeller centrifugal action separates the gas from the liquid resulting in the cessation of the liquid flow. For these cases, specially designed centrifugal pumps with better tolerance to gas entrainment or rotary pumps may be considered, even though their capacity is affected by entrained and dissolved air or gases. See Hydraulic Institute Standards.[5]

Datum — The pump datum elevation is a very important factor to consider and should be verified with the manufacturer. Some common references are shown in Fig. 12-4. Some manufacturers provide two NPSHR curves for vertical can pumps, one for the first stage impeller suction eye and the other for the suction nozzle.

NPSH Correction Factors —NPSHR is determined from tests by the pump manufacturer using water near room temperature and is expressed in height of water. When hydrocarbons or high-temperature water are pumped, less NPSH is required than when cold water is pumped. Hydraulic Institute correction factors for various liquids are reproduced in Fig. 12-5. Some users prefer not to use correction factors to assure a greater design margin of safety.

NPSH and Suction Specific Speed — Suction specific speed is an index describing the suction capabilities of a first stage impeller and can be calculated using Eq. 12-7. Use half of the flow for double suction impellers.

$$S = \frac{n\sqrt{Q_{bep}}}{\text{NPSHR}_{bep}{}^{3/4}} \qquad \textbf{Eq. 12-7}$$

Pumps with high suction speed tend to be susceptible to vibration (which may cause seal and bearing problems) when they are operated at other than design flow rates. As a result, some users restrict suction specific speed, and a widely accepted maximum is 11,000. For more details on the significance of suction specific speed, consult pump vendors or references listed in the References section.

Submergence — The suction system inlet or the pump suction bell should have sufficient height of liquid to avoid vortex formation, which may entrain air or vapor into the system and cause loss of capacity and efficiency as well as other problems such as vibration, noise, and air or vapor pockets. Inadequate reservoir geometry can also cause vortex formation, primarily in vertical submerged pumps. Refer to the Hydraulic Institute Standards[5] for more information.

CALCULATING THE REQUIRED DIFFERENTIAL HEAD

The following procedure is recommended to calculate the head of most pump services encountered in the gas processing industry. See Example 12-1.

1. Prepare a sketch of the system in which the pump is to be installed, including the upstream and downstream vessels (or some other point at which the pressure will not be affected by the operation of the pump). Include all components which might create frictional head loss (both suction and discharge) such as valves, orifices, filters, and heat exchangers.
2. Show on the sketch:
    - — The datum position (zero elevation line) according to the proper standard. See Fig. 12-4.
    - — The pump nozzles sizes and elevations.
    - — The minimum elevation (referred to the datum) of liquid expected in the suction vessel.
    - — The maximum elevation (referred to the datum) to which the liquid is to be pumped.
    - — The head loss expected to result from each component which creates a frictional pressure drop at design capacity.
3. Use appropriate equations (Eq 12-1 to Eq 12-4).
4. Convert all the pressures, frictional head losses, and static heads to consistent units (usually pounds per square inch or feet of head). In 5 and 6 below, any elevation head is negative if the liquid level is below the datum. Also, the vessel pressures are the pressures acting on the liquid surfaces. This is very important for tall towers. In the case of partitioned vessels, be sure to use the corresponding chamber pressure and liquid level elevation. And when the liquid is not a continuous phase, or it is not clear where the liquid level is, as in the case of

packed fractionating towers, consider only the piping and exclude such vessels from the system.

5. Add the static head to the suction vessel pressure, then subtract the frictional head losses in the suction piping. This gives the total pressure (or head) of liquid at the pump suction flange.
6. Add the discharge vessel pressure, the frictional head losses in the discharge piping system, and the discharge static head. This gives the total pressure (or head) of liquid at the pump discharge. According to the type of capacity and head controls, pump type and energy conservation, required for the particular situation, provide a head and/or a flow additional margin to provide a good control. A control valve to throttle the discharge or to recirculate the flow, or a variable speed motor, etc. may be the options to provide good control.
7. Calculate the required pump total head by subtracting the calculated pump suction total pressure from the calculated pump discharge total pressure and converting to head.
8. It is prudent to add a safety factor to the calculated pump head to allow for inaccuracies in the estimates of heads and pressure losses, and pump design. Frequently a safety factor of 10% is used, but the size of the factor used for each pump should be chosen with consideration of:
    - The accuracy of the data used to calculate the required head
    - The cost of the safety factor
    - The problems which might be caused by installing a pump with inadequate head.

Example 12-1 — Liquid propane, at its bubble point, is to be pumped from a reflux drum to a depropanizer. The maximum flow rate is expected to be 360 gpm. The pressures in the vessels are 200 and 220 psia respectively. The specific gravity of propane at the pumping temperature (100°F) is 0.485. The elevations and estimated frictional pressure losses are shown on Fig.12-6. The pump curves are shown in Fig. 12-7. The pump nozzles elevations are zero and the velocity head at nozzles is negligible.

FIG. 12-4

Datum elevation

Pump type	Standard	Datum elevation
Centrifugal, horizontal	API 610[1] Hydraulic Institute[5]	Shaft centerline
Centrifugal, vertical in-line	API 610[1]	Suction nozzle centerline
Centrifugal, other vertical	API 610[1]	Top of the foundation
Centrifugal, vertical single suction, volute and diffused vane type	Hydraulic Institute[5]	Entrance eye to the first stage impeller
Centrifugal, vertical double suction	Hydraulic Institute[5]	Impeller discharge horizontal centerline
Vertical turbine. Line shaft and submersible types	AWWA E101[18]	Underside of the discharge head or head baseplate
Reciprocating	Hydraulic Institute[5]	Suction nozzle centerline

Required differential head is determined as follows:

Absolute Total Pressure at Pump Suction

Reflux drum		200.0 psia
Elevation	20 ft. • 0.485/2.31 =	+4.2 psi
Friction	piping	–0.5 psi
	valves	–0.2 psi
		203.5 psia
		= 188.8 psig

Absolute Total Pressure at Pump Discharge

Tower		220.0 psia
Elevation	74 ft • 0.485/2.31 =	+15.5 psi
Friction	piping	+3.0 psi
	valves	+2.0 psi
	orifice	+1.2 psi
	filter	+13.0 psi
	check valve	+1.0 psi
	control valve	+9.0 psi
		264.7 psia
		= 250.0 psig

FIG. 12-5

NPSHR Reduction for Centrifugal Pumps Handling Hydrocarbon Liquids and High Temperature Water

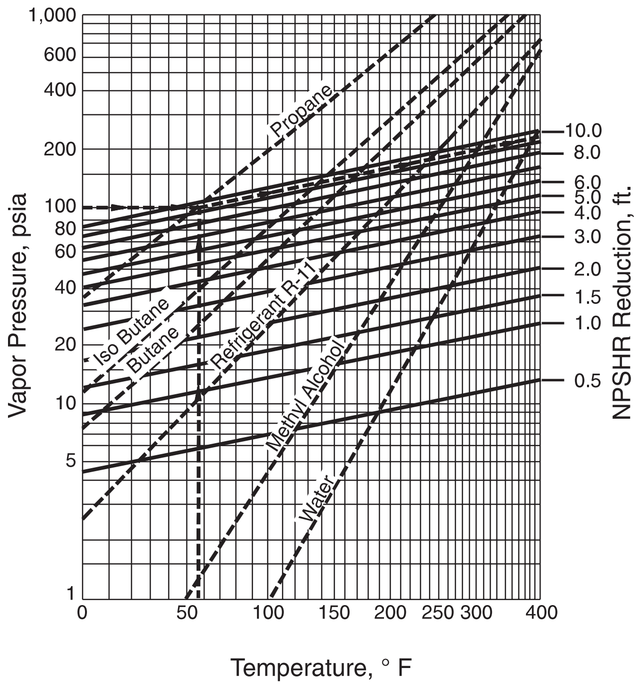

This chart has been constructed from test data obtained using the liquids shown. For applicability to other liquids refer to the Hydraulic Institute Standards.[5]

Differential pressure = 250.0 – 188.8 = 61.2 psi

$$\text{Differential head} = H = \frac{(61.2)\,(2.31)}{0.485} = 292 \text{ ft}$$

10% safety factor	30 ft
Required differential head (H)	322 ft

FIG. 12-6

Example 12-1 Depropanizer

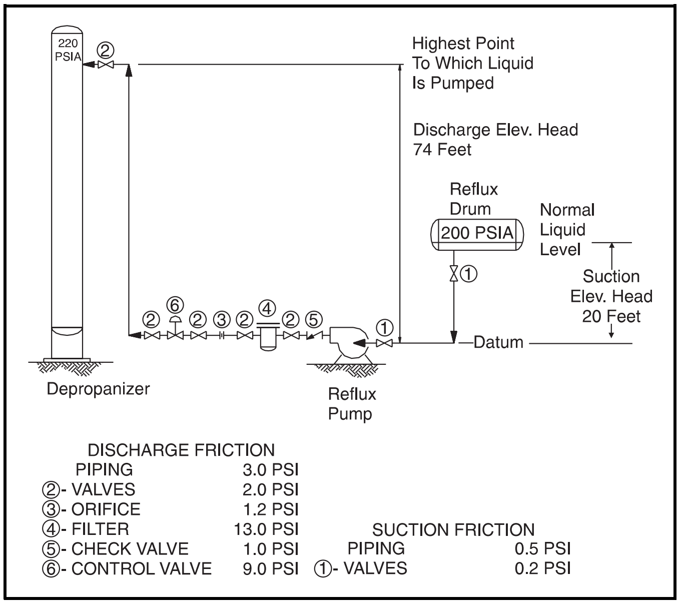

Calculation of NPSHA

Reflux drum pressure		200.0 psia
Elevation	20 ft • 0.485/2.31 =	+4.2 psi
Friction	valves =	–0.2 psi
	piping =	–0.5 psi
Fluid vapor pressure		–200.0 psia
		3.5 psi

$$\text{NPSHA} \quad \frac{3.5 \bullet 2.31}{0.485} = 16.7 \text{ ft}$$

This NPSHA result is adequate when compared to the 9 ft. of NPSHR in the curve shown in Fig. 12-7.

Calculation of Hydraulic Power

$$\text{hyd hp} = \frac{Q \bullet H \bullet \text{sp gr}}{3960} \qquad \textbf{(from Fig. 12-2)}$$

$$\text{hyd hp} = \frac{(360)\,(322)\,(0.485)}{3960} = 14.2 \text{ hp}$$

Calculation of Actual Horsepower

$$\text{bhp} = \frac{\text{hyd hp}}{e} \qquad \textbf{(from Fig. 12-2)}$$

Fig. 12-7 is the performance curve of the selected pump. The efficiency at rated capacity and required head is 62%, with a brake horsepower calculated as follows:

$$\text{bhp} = \frac{14.2 \text{ hp}}{0.62} = 22.9 \text{ bhp}$$

FIG. 12-7

Depropanizer Reflux Pump for Example 12-1

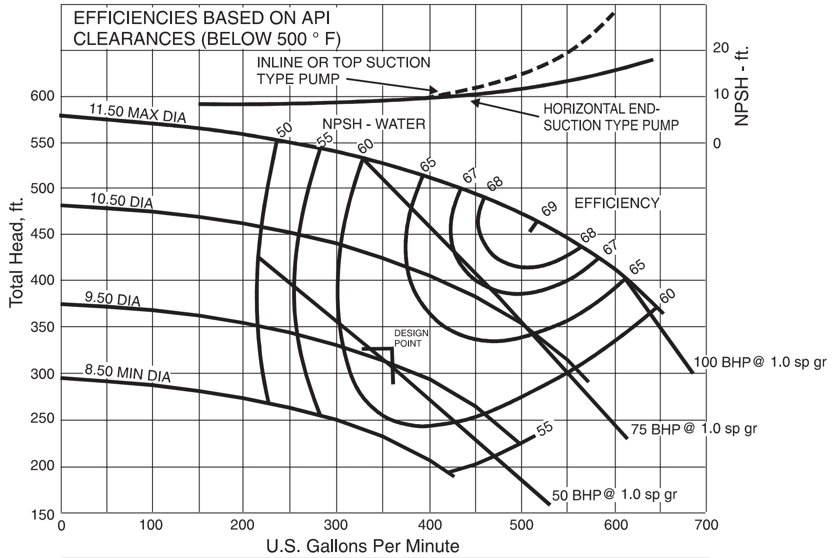

DEPROPANIZER REFLUX PUMP					
MAX IMPELLER DIA	11.50 IN	3 X 4 X 11.5 SINGLE STAGE PUMP			
MIN DIA	8.50 IN	DIA IMPELLER 9.75 IN	IMPELLER PATT	3,560 RPM	
EYE AREA	14.2 SQ IN	NPSH REQUIRED 9 FT	REFERENCE	CURVE NO. CA-307-3	

Motor Sizing — The maximum flow is 500 gpm with a head of 240 feet for this particular pump impeller size, which results in a brake horsepower requirement of 26.2 bhp at runout (i.e., end of head curve). Therefore a 30 hp motor is selected for the pump driver to provide "full curve" protection.

CENTRIFUGAL PUMPS

Figs. 12-8a through 12-8e are cross-sectional drawings showing typical configurations for five types of centrifugal pumps. A guide to selecting centrifugal pumps is shown in Fig. 12-9. Horizontal centrifugal pumps are more common; however, vertical pumps are often used because they are more compact and, in cold climates, may need less winterizing than horizontal pumps. The total installed cost of vertical pumps is frequently lower than equivalent horizontal pumps because they require smaller foundations and simpler piping systems.

Vertical can pumps are often used for liquids at their bubble-point temperature because the first stage impeller is located below ground level and therefore requires less net positive suction head at the suction flange. The vertical distance from the suction flange down to the inlet of the first stage impeller provides additional NPSHA.

Centrifugal Pump Theory

Centrifugal pumps increase the pressure of the pumped fluid by action of centrifugal force on the fluid. Since the total head produced by a centrifugal pump is independent of the density of the pumped fluid, it is customary to express the pressure increase produced by centrifugal pumps in feet of head of fluid pumped.

Operating characteristics of centrifugal pumps are expressed in a pump curve similar to Fig. 12-7. Depending on impeller design, pump curves may be "drooping," "flat," or "steep." Fig. 12-10 shows these curves graphically. Pumps with drooping curves tend to have the highest efficiency but may be undesirable because it is possible for them to operate at either of two flow rates at the same head. The influence of impeller design on pump curves is discussed in detail in Hydraulic Institute Standards.[5]

Specific Speed

Specific speed gives an indication of the impeller shape and pump characteristics, as can be seen in the Fig. 12-11, from the Hydraulic Institute Standards. The ratios of major dimensions vary uniformly with specific speed. Specific speed is given by the equation in Fig 12-2.

Affinity Laws

The relationships between rotational speeds, impeller diameter, capacity, head, power, and NPSHR for any particular pump are defined by the affinity laws (See Fig. 12-2 for affinity laws). These equations are to predict new curves for changes in impeller diameter and speed.

The capacity of a centrifugal pump is directly proportional to its speed of rotation and its impeller diameter. The total pump head developed is proportional to the square of its speed and its impeller diameter. The power consumed is proportional to the cube of its speed and its impeller diameter. The NPSHR is proportional to the square of its speed.

These equations apply in any consistent set of units but only apply exactly if there is no change of efficiency when the rotational speed is changed. This is usually a good approximation if the change in rotational speed is small.

A different impeller may be installed or the existing modified. The modified impeller may not be geometrically similar to the original. An approximation may be found if it is assumed that the change in diameter changes the discharge peripheral velocity without affecting the efficiency. Therefore, at equal efficiencies and rotational speed, for small variations in impeller diameter, changes may be calculated using the affinity laws.

These equations do not apply to geometrically similar but different size pumps. In that case dimensional analysis should be applied.

The affinity equations apply to pumps with radial flow impellers, that is, in the centrifugal range of specific speeds, below 4200. For axial or mixed flow pumps, consult the manufacturer. See Fig. 12-2 for specific speed equation.

Efficiency

Hydraulic Institute charts reproduced in Fig 12-13 and Fig 12-14, provide centrifugal pumps optimum generally attainable efficiency vs. capacity for several pump types, corrected according to specific speed and maximum and minimum deviation.

Viscosity

Most liquids pumped in gas processing plants have viscosities in the same range as water. Thus they are considered "nonviscous" and no viscosity corrections are required. Occasionally fluids with viscosities higher than 5 centistokes are encountered (e.g. triethylene glycol, 40 cs at 70°F) and corrections to head, capacity, and power consumption may be required.

Viscosity correction charts and the procedures for using them are included in Hydraulic Institute Standards.[5]

Matching the Pump to the System Requirements

A pump curve depicts the relationship between the head and capacity of a pump. A system curve shows the relationship between the total head difference across the system and the flow rate through it. The total head difference consists of three components: static (gravity) head, pressure head, and head-loss due to friction. Static and pressure heads do not change with flow. However, frictional losses usually increase approximately as the square of the flow rate through the system. If the system curve is plotted with the same units as the pump curve, it can be superimposed as shown in Fig. 12-12.

For pump selection, the shape and slope of the pump curve shall be considered in its position with respect to the system curve. When the curves are approximately perpendicular to each other, the change in the operating point position due to deviations in the curves will be minimum. In addition, the shape and slope shall be considered when several pumps are used in series and/or parallel operation to produce the desired range of flow and/or operating pressure. Refer to Fig. 12-15 and Fig. 12-16 for series and parallel operation.

Throttling Control — If a centrifugal pump and a system were matched as shown in Fig. 12-12, the flow rate through the system will be "A" unless some kind of flow control is provided. Control usually is provided by throttling a valve in the discharge piping of the pump, which creates extra frictional

FIG. 12-8a

Horizontal Single Stage Process Pump

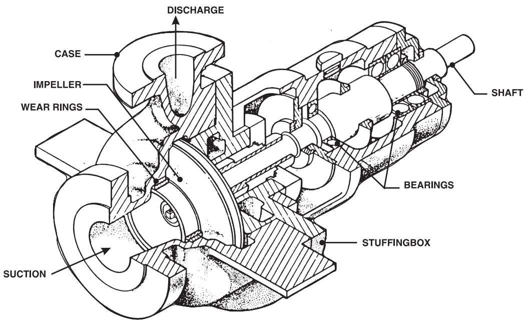

Pump Type: Overhung Impeller, Separately Coupled, Single Stage, Centerline Support, API 610

Range: 10-10,000 USGPM; 50-700 feet TH; 1200-3600 rpm

Typical Application: Reflux, circulation, booster, boiler feed

Courtesy of Bingham – Willamette Ltd.

FIG. 12-8b

Vertical Inline Pump

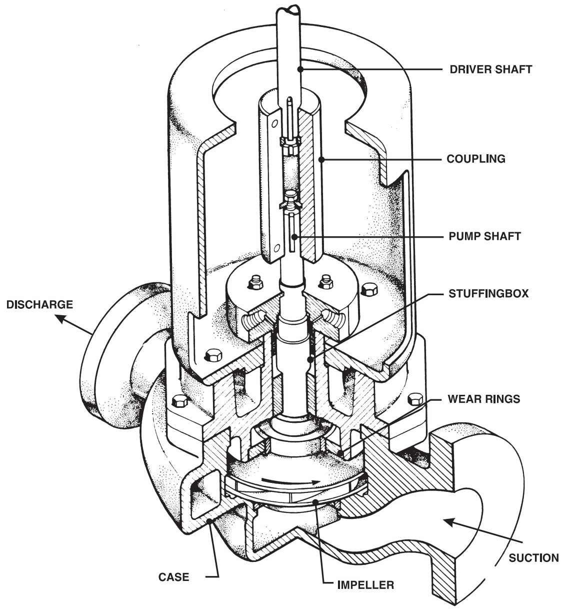

Pump Type: Inline, Separately Coupled, Single Stage, Rigid Coupling, API 610

Range: 10-3500 USGPM; 50-700 feet TH; 1200-3600 rpm

Typical Application: Reflux, circulation, booster, boiler feed

Courtesy of Bingham – Willamette Ltd.

FIG. 12-8c

Horizontal Multi-Stage Pump

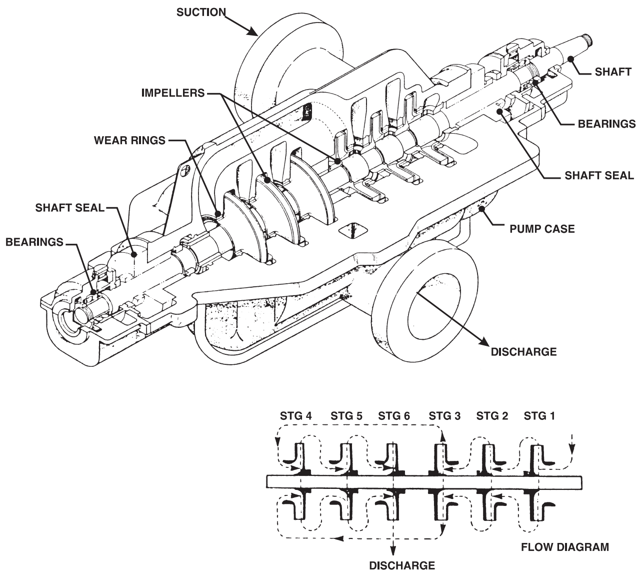

Pump Type: Horizontal, multi-stage, opposed impellers, axial split case, separately coupled

Range: 10-3000 USGPM; 800-10,000 feet TH; 1800-7000 rpm

Typical Application: Treating solution charge, absorption oil, boiler feed, pipeline, water and NGL injection

Courtesy of Bingham – Willamette Ltd.

FIG. 12-8d

Vertical Can Pump

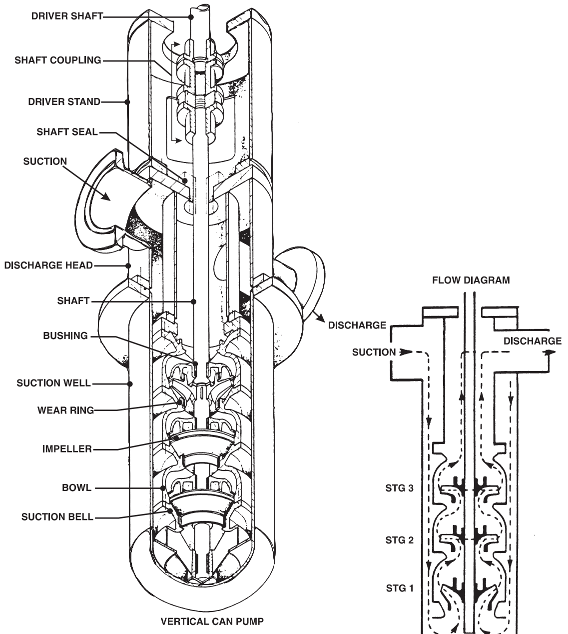

Pump Type: Vertical can, multi-stage, turbine

Range: 50-10,000 USGPM; 100-3,000 feet TH; 1800-3600 rpm

Typical Application: Loading, transfer, pipeline booster, boiler feed

Courtesy of Bingham – Willamette Ltd.

FIG. 12-8e
Vertical, High Pressure, Double Case, Multi-Stage Pump

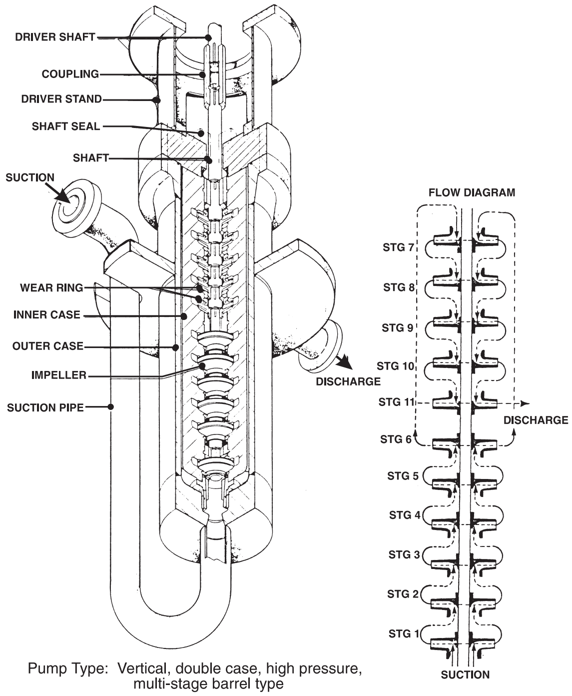

Pump Type: Vertical, double case, high pressure, multi-stage barrel type

Range: 50-1000 USGPM; 500-8000 feet TH; 3600 rpm

Typical Application: High pressure injection, ethane product, miscible flood, boiler feed

Courtesy of Bingham – Willamette Ltd.

losses so that pump capacity is reduced to that required. In Fig. 12-12, the required flow rate is represented by "B." Required amount of extra frictional losses to achieve a flow rate of "B" is represented on Fig. 12-12 by the difference between "H_B-PUMP" and "H_B-SYSTEM." Frequently the throttling valve is an automatic control valve which holds some plant condition constant (such as liquid level, flow rate, or fluid temperature). This control method consumes energy since it artificially increases the system resistance to flow.

Recirculation Control — Pump capacity can also be controlled by recirculating a portion of the pumped fluid back to the suction. This control method is used more frequently for positive displacement pumps than for centrifugal pumps, since the discharge of most positive displacement pumps should not be throttled. This control method should be used with caution for centrifugal pumps, since a wide-open recirculation may result in a head so low that the pumped fluid will be circulated back to the suction at an extremely high rate, causing high power consumption, increase in fluid temperature, and possibly cavitation, as well as possibly overloading the driver.

Speed Control — Another way of regulating centrifugal pump capacity is to adjust the rotational speed of the pump. This is frequently not easily done because most pumps are driven by fixed-speed motors. However, pumps controlled by adjusting the rotational speed often consume substantially less energy than those controlled in other ways. The changed power consumption can be calculated by Eq. 12-8, which assumes that the frictional head is proportional to the square of the flow rate.

FIG. 12-9
Pump Selection Guide — Centrifugal Pumps

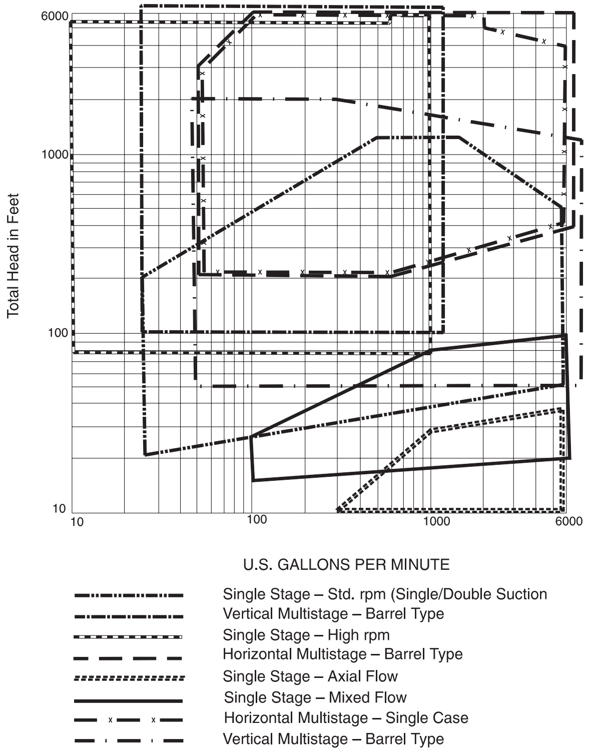

Courtesy of Bingham – Willamette Ltd.

$$bhp_2 = bhp_1 \left(\frac{e_1}{e_2}\right)\left[\frac{h_s\,(Q_2/Q_1) + h_{f1}\,(Q_2/Q_1)^3}{h_s + h_{f1}}\right] \qquad \textbf{Eq 12-8}$$

subscript 1 refers to initial flow rate

subscript 2 refers to the changed flow rate

h_s (static) is equivalent to the zero flow system total head

FIG. 12-10
Example Centrifugal Pump Head Curves

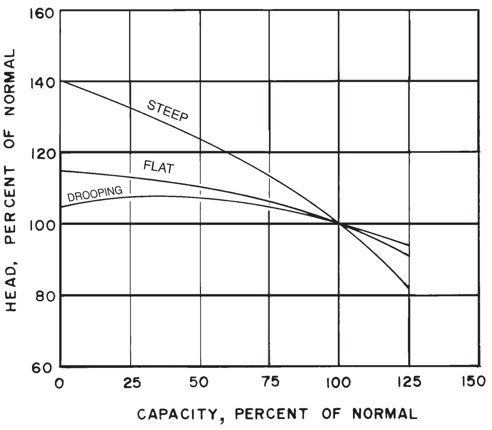

FIG. 12-11

Values of Specific Speeds (n_S)

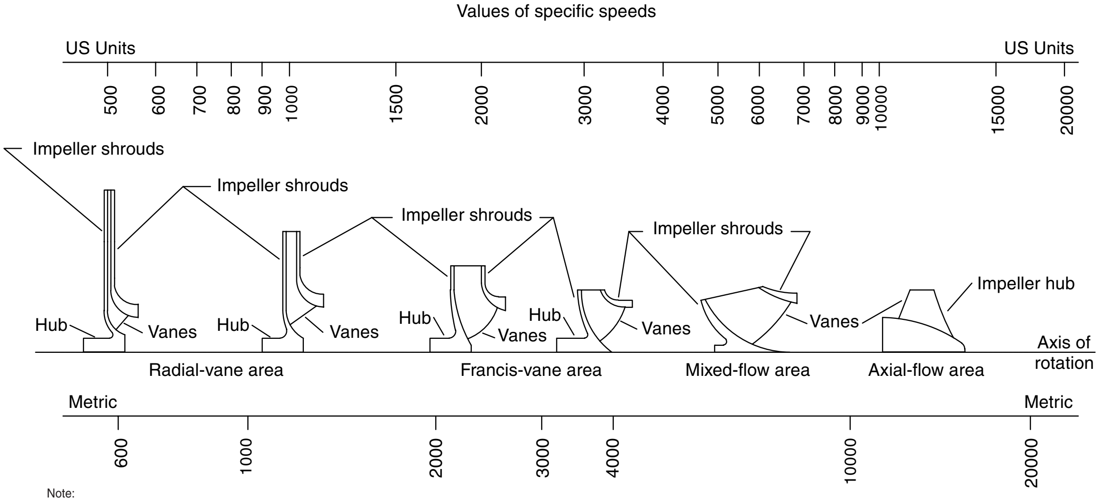

Note:
Profiles of several pump impeller designs ranging from the Low Specific Speed Radial Flow on the left to a High Specific Speed Axial Flow on the right, placed according to where each design fits on the Specific Speed Scale.
See Fig. 12-2 for units.

On-Off Control — Pump capacity can be controlled by starting and stopping the pump manually or by an automatic control such as pressure, level or temperature switches.

Temperature Rise Due to Pumping

When a liquid is pumped, its temperature increases because the energy resulting from the inefficiency of the pump appears as heat.

$$t_r = \frac{H\left(\frac{1}{e} - 1\right)}{778\,C_p} \qquad \textbf{Eq 12-9}$$

Usually when the pump is running normally, the temperature rise is negligible. However, if the pump discharge is shut off, all energy is converted to heat and since there is no fluid flow through the pump to carry the heat away, the liquid in the pump will heat rapidly and eventually vaporize. This can produce catastrophic failures, particularly in large multistage pumps.

Pump vendors should be requested to provide data on minimum flow.

Expensive pumps, such as large multistage units, can be protected by installing minimum flow recirculation which will ensure an adequate flow through the pump.

Series and Parallel Operation

Often pumps are installed in series or in parallel with other pumps. In parallel, the capacities at any given head are added; in series, the heads at any given capacity are added. A multistage pump is in effect a series of single stage units. Figs. 12-15 and 12-16 show series and parallel pumps curves, a system curve, and the effect of operating one, two or three pumps in a system. In both figures, the operating points for both pumps "A" and "B" are the same only when one pump is operating. For 2 or 3 pumps operating, the points are not the same because of the pump curve shapes. Hence, due considertion should be given to the pump curve shape when selecting pumps for series or parallel operation.

FIG. 12-12

Example Combined Pump-System Curves

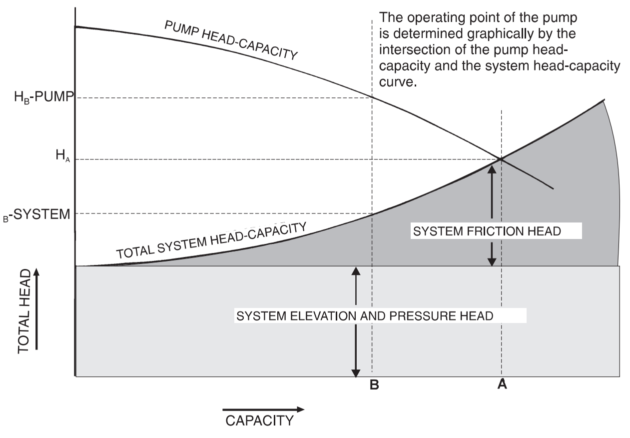

The operating point of the pump is determined graphically by the intersection of the pump head-capacity and the system head-capacity curve.

Parallel operation is most effective with identical pumps; however, they do not have to be identical, nor have the same shut-off head or capacity to be paralleled. When pumps are operating in parallel it is imperative that their performance curves rise steadily to shut-off. A drooping curve gives two possible points of operation, and the pump load may oscillate between the two causing surging.

Drivers

Most pumps used in gas processing service are driven by electric motors, usually fixed speed induction motors.

API Standard 610, Section 3.1.4. (Drivers), states:

FIG. 12-13

Optimum Generally Attainable Efficiency Chart

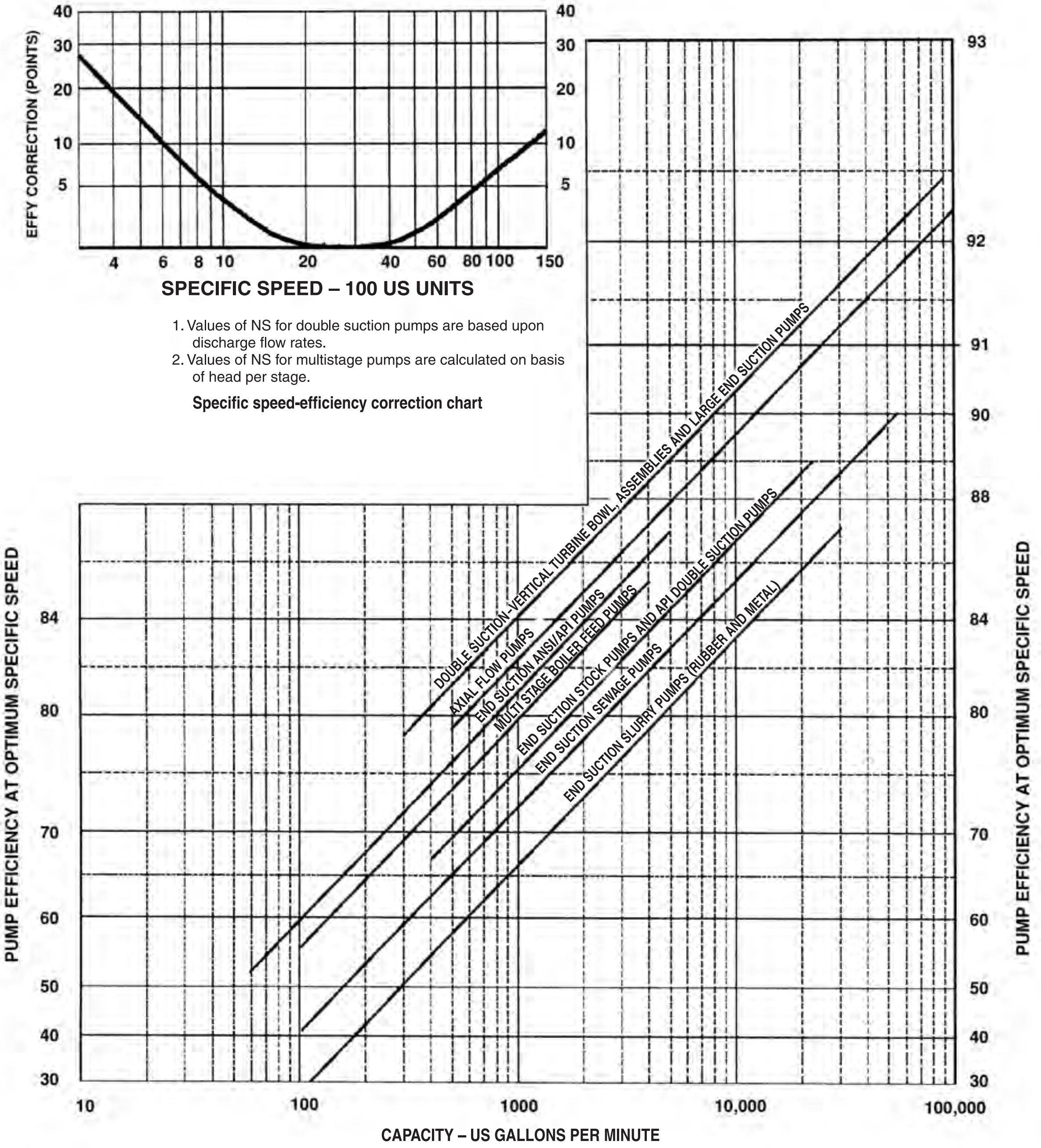

1. Values of NS for double suction pumps are based upon discharge flow rates.
2. Values of NS for multistage pumps are calculated on basis of head per stage.

Specific speed-efficiency correction chart

NOTES:

1. The above charts depict the generally attainable efficiency levels of centrifugal pumps at best efficiency point with maximum diameter impeller when pumping clear water at 85˚F.
2. The above charts relate to industrial class pumps designed, manufactured and tested in accordance with recognized industry standards.

Courtesy of the Hydraulic Institute, www.pumps.org

FIG. 12-14

Deviation from Generally Attainable Efficiency

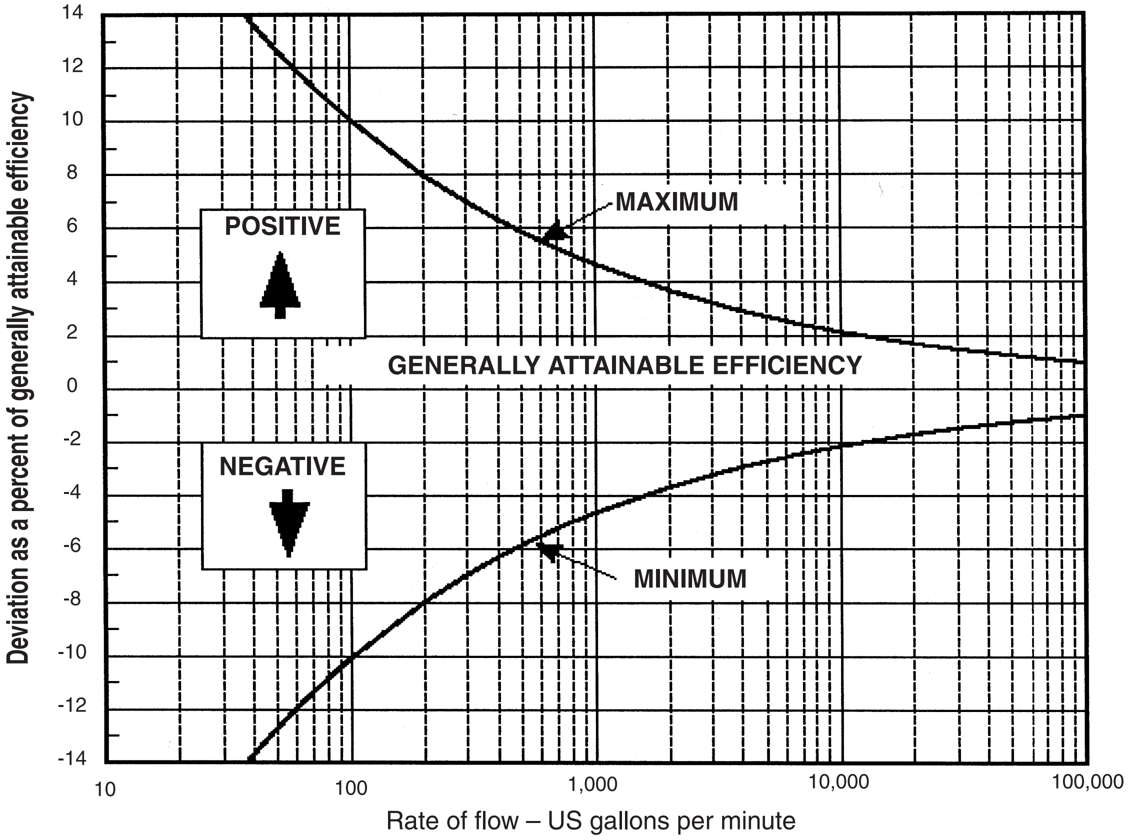

Courtesy of the Hydraulic Institute, www.pumps.org

"Motors shall have power ratings, including the service factor (if any), at least equal to the percentages of power at pump rated conditions given in. . ." the next table. "However, the power at rated conditions shall not exceed the motor nameplate rating. Where it appears that this procedure will lead to unnecessary oversizing of the motor, an alternate proposal shall be submitted for the purchaser's approval."

Motor Nameplate Rating		Percentage of Rated Pump Power
kW	hp	
<22	<30	125
22-55	30-75	115
>55	>75	110

Alternatives to electric motor drivers are:

- internal combustion engines
- gas turbines
- steam turbines
- hydraulic power-recovery turbines

Usually the speed of rotation of these drivers can be varied to provide control.

Variable Speed Drives — Fig. 12-18 lists various types of adjustable speed drives, their characteristics and their application.

Materials of Construction

Pumps manufactured with cast-steel cases and cast-iron internals are most common in the gas processing industry. API Std 610 is a good reference for material selection. The material selections in this document can be over-ridden as required to reflect experience.

Experience is the best guide to selection of materials for pumps. Process pump manufacturers can usually provide suggestions for materials, based on their experience and knowledge of pumps.

Shaft Seals

Mechanical seals are the most common sealing devices for centrifugal pumps in process service. The purpose of the seal is to retain the pumped liquid inside the pump at the point

FIG. 12-15

Series Pumps Selection

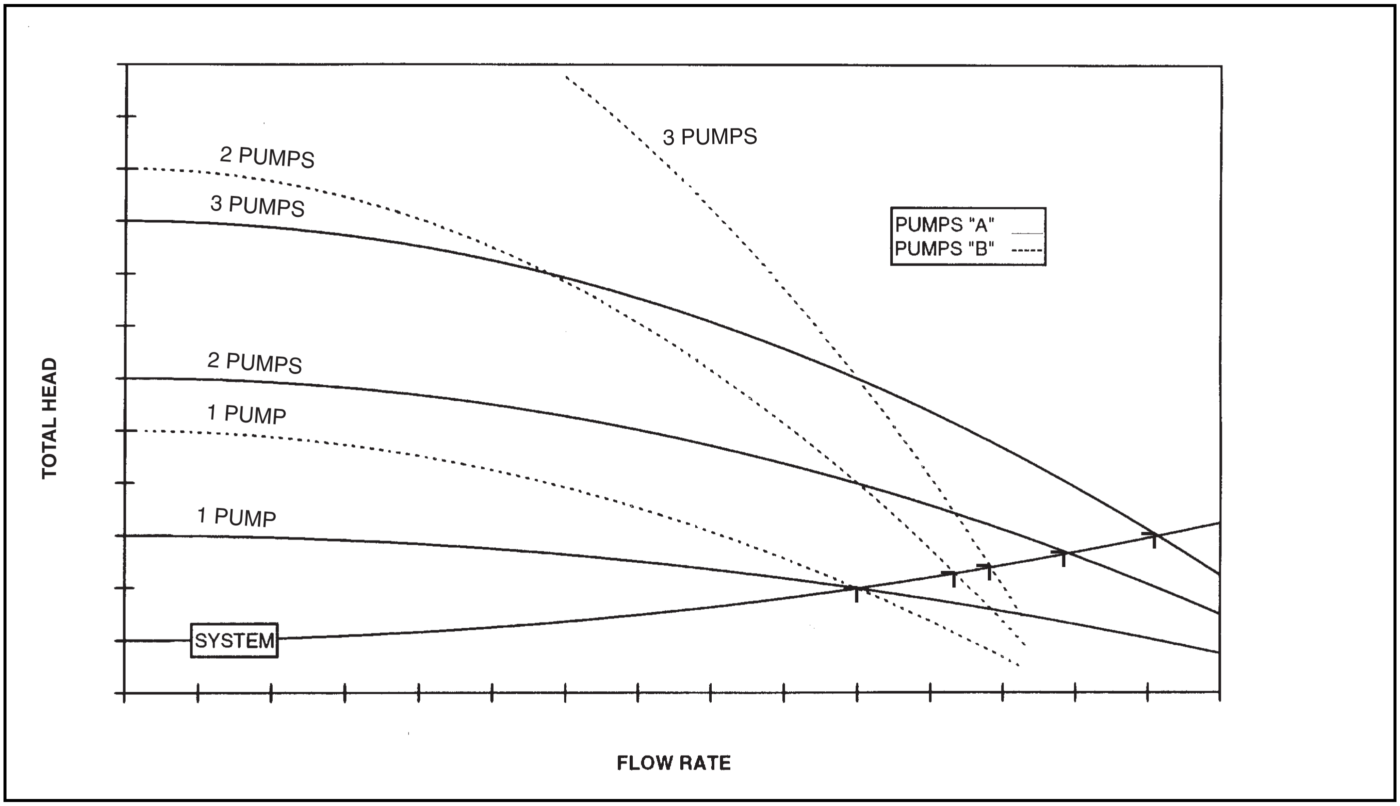

FIG. 12-16

Parallel Pumps Selection

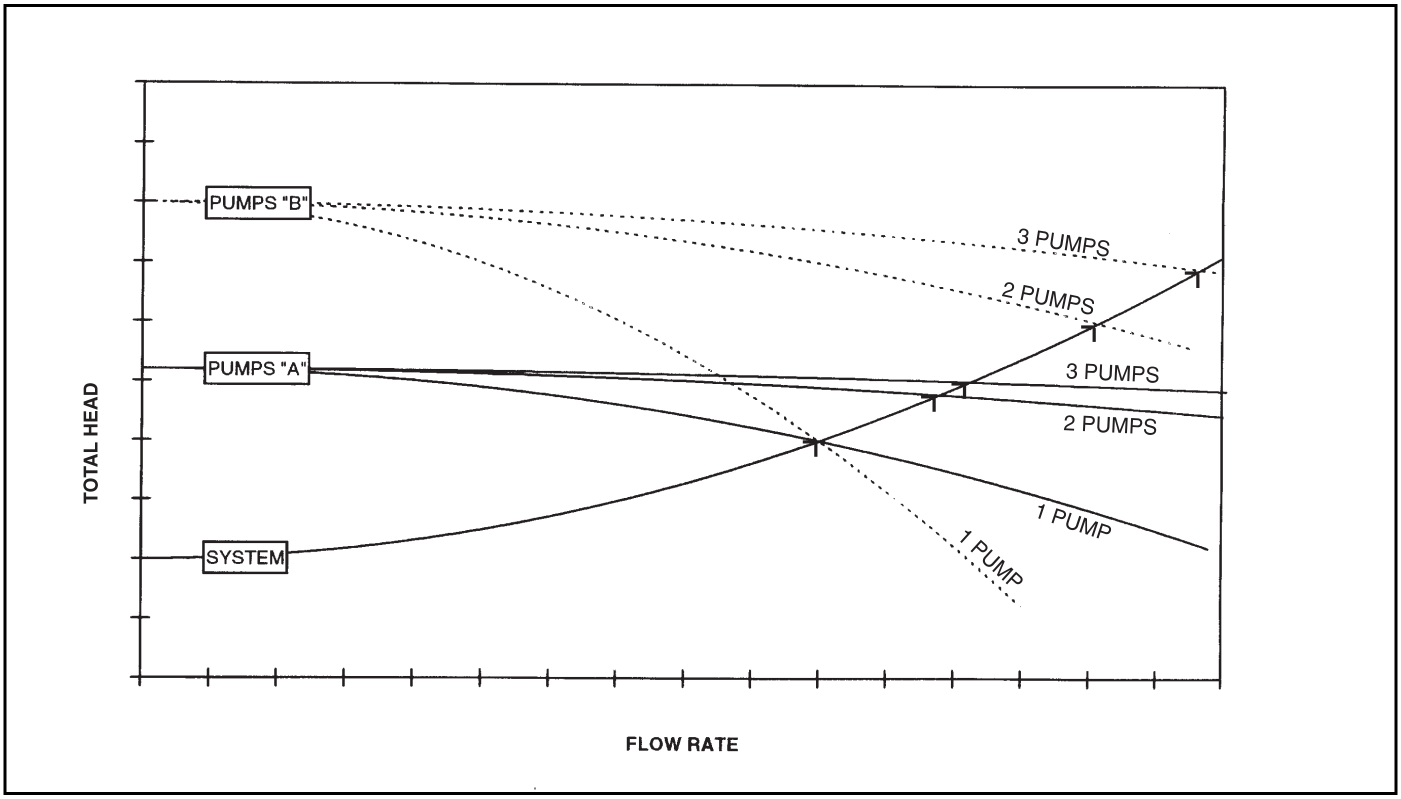

where the drive shaft penetrates the pump body. Mechanical seals consist of a stationary and a rotating face, and the actual sealing takes place across these very smooth, precision faces. Seal faces may require cooling and lubrication. API Std 610 describes seal flush systems used to cool the seal faces and remove foreign material. Seal manufacturers can provide application and design information.

Alignment, Supports, and Couplings

The alignment of the pump and driver should be checked and adjusted in accordance with the manufacturer's recommendations before the pump is started. If the operating temperature is greatly different from the temperature at which the alignment was performed, the alignment should be checked, and adjusted if necessary, at the operating temperature.

Pump and piping supports should be designed and installed so that forces exerted on the pump by the piping will not cause pump misalignment when operating temperature changes or other conditions occur.

The shaft coupling should be selected to match the power transmitted and the type of pump and driver. A spacer type coupling should be used if it is inconvenient to move either the pump or the driver when the seal (or other component) requires maintenance.

Piping

Pump requirements, nozzle size, type of fluid, temperature, pressure and economics determine materials and size of piping.

Suction lines should be designed to keep friction losses to a minimum. This is accomplished by using an adequate line size, long radius elbows, full bore valves, etc. Pockets where air or vapor can accumulate should be avoided. Suction lines should be sloped, where possible, toward the pump when it is below the source, and toward the source when it is below the pump. Vertical downward suction pipes require special care to avoid pulsation and vibrations that can be caused by air or vapor entrainment. Elbows entering double suction pumps should be installed in a position parallel to the impeller. Sufficient liquid height above the suction piping inlet, or a vortex breaker, should be provided to avoid vortex formation which may result in vapors entering the pump. Suction vessel tangential inlets and centrifugal pumps may induce a vortex in the vessel and pump suction line, opening a vapor core that feeds into the pump suction. Whatever the cause, vortexes can be eliminated with a straightening cross, also called a vortex breaker, installed at the vessel outlet nozzle.

For discharge piping, sizing is determined by the available head and economic considerations. Velocities range from 3 to 15 ft/sec. A check valve should be installed between the discharge nozzle and the block valve to prevent backflow.

Auxiliary piping (cooling, seal flushing and lubrication) is a small but extremely important item. API Standard 610, "Centrifugal Pumps for General Refinery Service," or applicable national standard should be followed. Provisions for piping of stuffing box leakage and other drainage away from the pump should be provided.

Pump Protection

The following protection may be considered:

- low suction pressure
- high discharge pressure
- low suction vessel (or tank) level
- high discharge vessel (or tank) level
- low flow
- flow reversal
- high temperature of bearings, case, etc.
- vibrations
- lack of lubrication
- overspeed

Protection may be considered for the pump driver and may be combined with pump protections.

Installation, Operation, Maintenance

Installation, operation, and maintenance manuals should be provided by the pump manufacturer and are usually application specific. See Fig. 12-17 for a checklist of pump troubles and causes.

Driver rotation and alignment should be checked before the pump is operated.

A typical starting sequence for a centrifugal pump is:

- Ensure that all valves in auxiliary sealing, cooling, and flushing system piping are open, and that these systems are functioning properly.
- Close discharge valve.
- Open suction valve.
- Vent gas from the pump and associated piping.
- Energize the driver.
- Open discharge valve slowly so that the flow increases gradually.
- Note that, on larger multistage pumps, it is very important that flow through the pump is established in a matter of seconds. This is frequently accomplished by the previously mentioned minimum flow recirculation.

RECIPROCATING PUMPS

The most common reciprocating pump in gas plants is the single-acting plunger pump which is generally employed in services with moderate capacity and high differential pressure. These pumps fill on the backstroke and exhaust on the forward stroke. They are available with single (simplex) or multi-plungers (duplex, triplex, etc.), operating either horizontally or vertically. Examples of plunger pump service in gas plants are: high pressure chemical or water injection, glycol circulation, and low capacity, high pressure amine circulation, and pipeline product pumps.

Double-acting piston pumps which fill and exhaust on the same stroke have the advantage of operating at low speeds and can pump high viscosity liquids which are difficult to handle with normal centrifugal or higher speed plunger pumps.

Pump Calculations

Power requirement bhp: see equation in Fig. 12-2.

Displacement for single-acting pump

$$D = \frac{A \bullet m \bullet L_s \bullet n}{231} \qquad \textbf{Eq 12-10}$$

Displacement for double-acting pump

$$D = \frac{(2A - a)\, m \bullet L_s \bullet n}{231} \qquad \textbf{Eq 12-11}$$

FIG. 12-17

Check List for Centrifugal Pump Troubles and Causes

Trouble:	Possible Causes:
1. Failure to deliver liquid	a. Wrong direction of rotation b. Pump not primed c. Suction line not filled with liquid d. Air or vapor pocket in suction line e. Inlet to suction pipe not sufficiently submerged f. Available NPSH not sufficient g. Pump not up to rated speed h. Total head required greater than head which pump is capable of delivering
2. Pump does not deliver rated capacity	a. Wrong direction of rotation b. Suction line not filled with liquid c. Air or vapor pocket in suction line d. Air leaks in suction line or stuffing boxes e. Inlet to suction pipe not sufficiently submerged. f. Available NPSH not sufficient g. Pump not up to rated speed h. Total head greater than head for which pump designed j. Foot valve too small k. Foot valve clogged with trash m. Viscosity of liquid greater than that for which pump designed n. Mechanical defects: (1) Wearing rings worn (2) Impeller damaged (3) Internal leakage resulting from defective gaskets o. Discharge valve not fully opened
3. Pump does not develop rated discharge pressure	a. Gas or vapor in liquid b. Pump not up to rated speed c. Discharge pressure greater than pressure for which pump designed d. Viscosity of liquid greater than that for which pump designed e. Wrong rotation f. Mechanical defects: (1) Wearing rings worn (2) Impeller damaged (3) Internal leakage resulting from defective gaskets
4. Pump loses liquid after starting	a. Suction line not filled with liquid b. Air leaks in suction line or stuffing boxes c. Gas or vapor in liquid d. Air or vapor pockets in suction line e. Inlet to suction pipe not sufficiently submerged f. Available NPSH not sufficient g. Liquid seal piping to lantern ring plugged h. Lantern ring not properly located in stuffing box

Trouble:	Possible Causes:
5. Pump overloads driver	a. Speed too high b. Total head lower than rated head c. Excessive recirculation d. Either or both the specific gravity and viscosity of liquid different from that for which pump is rated e. Mechanical defects: (1) Misalignment (2) Shaft bent (3) Rotating element dragging (4) Packing too tight
6. Vibration	a. Starved suction (1) Gas or vapor in liquid (2) Available NPSH not sufficient (3) Inlet to suction line not sufficiently submerged (4) Gas or vapor pockets in suction line b. Misalignment c. Worn or loose bearings d. Rotor out of balance (1) Impeller plugged (2) Impeller damaged e. Shaft bent f. Improper location of control valve in discharge line g. Foundation not rigid
7. Stuffing boxes overheat	a. Packing too tight b. Packing not lubricated c. Wrong grade of packing d. Insufficient cooling water to jackets e. Box improperly packed.
8. Bearings overheat	a. Oil level too low b. Improper or poor grade of oil c. Dirt in bearings d. Dirt in oil e. Moisture in oil f. Oil cooler clogged or scaled g. Failure of oiling system h. Insufficient cooling water circulation i. Insufficient cooling air k. Bearings too tight m. Oil seals too close fit on shaft n. Misalignment
9. Bearings wear rapidly	a. Misalignment b. Shaft bent c. Vibration d. Excessive thrust resulting from mechanical failure inside the pump e. Lack of lubrication f. Bearings improperly installed g. Dirt in bearings h. Moisture in oil j. Excessive cooling of bearings

FIG. 12-18

Adjustable Speed Drives[3] and Power Transmissions

Type	Characteristics	Applications
Electric Drivers		
Solid State AC drives	• high efficiency • good speed regulation • low maintenance • complex controls • high cost • can be explosion proof • can retrofit	• 50 to 2500+ bhp • larger pumps where good speed regulation over not too wide a range is required • hazardous areas
Solid State DC drives	• similar to AC except speed regulation good over a wider range	• 50 to 500+ bhp • non-hazardous areas
Electromechanical		
Eddy Current Clutch	• efficient, proportional to slip • poor speed regulation • require cooling	• 5 to 500+ bhp • smaller centrifugal pumps where speed is usually near design • non-hazardous areas
Wound-Rotor Motor	• poor speed regulation • reasonable efficiency	• 50 to 500+ bhp • larger pumps non-hazardous areas
Mechanical		
Rubber Belt	• wide range of speed regulation possible	• fractional to 100 bhp • small centrifugal and positive displacement pumps
Metal Chain	• low to medium efficiency	• chemical feed pumps • non-hazardous areas
Hydraulic Power Recovery Turbines	• medium efficiency • continuously variable speed • reversible use as pump	• available hydraulic head

Notes:

1. Actual capacity (Q) delivered by pump is calculated by multiplying displacement by the volumetric efficiency.
2. The combination of mechanical and volumetric efficiency for reciprocating pumps is normally 90% or higher for noncompressible fluids.
3. In double-acting pumps with guided piston (rod in both sides), change "a" to "2a" in Eq 12-11.

Example 12-2 — Calculate the power required for a simplex plunger pump delivering 10 gpm of liquid of any specific gravity at 3000 psi differential pressure and mechanical efficiency of 90%.

$$\text{bhp} = \frac{(10)\,(3000)}{(1714)\,(0.90)} = 19.4 \text{ hp}$$

Volumetric Efficiency, Compressible Fluids — Unlike water, lighter hydrocarbon liquids (e.g. ethane, propane, butane) are sufficiently compressible to affect the performance of reciprocating pumps.

The theoretical flow capacity is never achieved in practice because of leakage through piston packing, stuffing boxes, or valves and because of changes in fluid density when pumping compressible fluids such as light hydrocarbons.

The ratio of real flow rate to theoretical flow rate (pump displacement) is the volumetric efficiency. The volumetric efficiency depends on the size, seals, valves and internal configuration of each pump, the fluid characteristics and operating conditions.

When pumping compressible liquids, the volumetric efficiency should be stated with reference to the flow rate measured in a specific side of the pump (suction or discharge side).

The relationship of overall suction and discharge volumetric efficiency, displacement, and suction and discharge flow rate of a reciprocating pump is defined in Eq 12-12. When the leakage is not considered, the overall efficiencies may be substituted by the density change efficiencies.

$$D = \frac{Q_s}{VE_{sov}} = \frac{Q_d}{VE_{dov}} \qquad \textbf{Eq 12-12}$$

The following equations are based on the discharge flow rate. Similar equations may be written for the suction side, and conversions may be made by multiplying them by the discharge to suction densities ratio.

The overall discharge volumetric efficiency is a combination of volumetric efficiency due to leakage and discharge volumetric efficiency due to fluid density change.

$$VE_{dov} = VE_l \cdot VE_{d\rho} \qquad \textbf{Eq 12-13}$$

The volumetric efficiency due to leakage is related to slip as follows:

$$VE_l = 1 - s \qquad \textbf{Eq 12-14}$$

The effect of the difference in the leakage flow rate measured at suction pressure vs discharge pressure is neglected here, assuming that all leakages are internal.

The discharge volumetric efficiency due to density change is:

$$VE_{d\rho} = 1 - r\left[1 - \frac{\rho_i}{\rho_o}\right] \qquad \textbf{Eq 12-15}$$

When the change in fluid density is linear with the change in pressure and is smaller than 10%, and the temperature change is negligible, Equation 12-16 may be used to calculate hydraluic power. H_c comes from Eq 12-5. Additionally, approximately 2 to 5% of power may be required for the work done during the piston cycle, in compressing and in decompressing the fluid that is held in the pump chamber without flowing through the pump.

$$\text{hyd hp} = \frac{Q_d \cdot \text{sp gr}_o \cdot H_c}{3960} \qquad \textbf{Eq 12-16}$$

When the differential pressure is sufficiently high to cause a density change of more than 10%, or when the pressure is near the fluid's critical pressure, or when temperature change is not negligible, this equation may not be accurate. In such cases the pump manufacturer should be consulted. See Equipment and System Equations, last paragraph.

Data on density change with pressure and temperature can be found in Section 23, "Physical Properties."

Example 12-3 — For a 3" diameter and a 5 inch stroke triplex plunger pump pumping propane with a suction density 31.4 lb/cu ft and a discharge density 32.65 lb/cu ft and given that r = 4.6 and s = 0.03, find the overall discharge volumetric efficiency.

Discharge volumetric efficiency due to density change:

$$VE_{d\rho} = 1 - 4.6\left(1 - \frac{31.4}{32.65}\right) = 0.824$$

Volumetric efficiency due to leakage

$$VE_l = 1 - 0.03 = 0.97$$

Overall discharge volumetric efficiency:

$$VE_{dov} = (0.824) \cdot (0.97) = 0.799$$

Suction System Considerations

The suction piping is a critical part of any reciprocating pump installation. The suction line should be as short as possible and sized to provide not more than three feet per second fluid velocity, with a minimum of bends and fittings. A centrifugal booster pump is often used ahead of a reciprocating pump to provide adequate NPSH which would also allow higher suction line velocities.

NPSH required for a reciprocating pump is calculated in the same manner as for a centrifugal pump, except that additional allowance must be made for the requirements of the reciprocating action of the pump. The additional requirement is termed acceleration head. This is the head required to accelerate the fluid column on each suction stroke so that this column will, at a minimum, catch up with the receding face of the piston during its filling stroke.

Acceleration Head — Acceleration head is the fluctuation of the suction head above and below the average due to the inertia effect of the fluid mass in the suction line. With the higher speed of present-day pumps or with relatively long suction lines, this pressure fluctuation or acceleration head must be taken into account if the pump is to fill properly without forming vapor which will cause pounding or vibration of the suction line.

With the slider-crank drive of a reciprocating pump, maximum plunger acceleration occurs at the start and end of each stroke. The head required to accelerate the fluid column (h_a) is a function of the length of the suction line and average velocity in this line, the number of strokes per minute (rpm), the type of pump and the relative elasticity of the fluid and the pipe, and may be calculated as follows:

$$h_a = \frac{L \cdot v \cdot n \cdot C}{k \cdot g} \qquad \textbf{Eq 12-17}$$

where C and k are given in Fig. 12-19.

Example 12-4 — Calculate the acceleration head, given a 2" diameter x 5" stroke triplex pump running at 360 rpm and displacing 73 gpm of water with a suction pipe made up of 4′ of 4" and 20′ of 6" standard wall pipe.

Average Velocity in 4" Pipe = 1.84 fps

Average Velocity in 6" Pipe = 0.81 fps

Acceleration Head in 4" Pipe

$$h_{a4} = \frac{(4)\,(1.84)\,(360)\,(0.066)}{(1.5)\,(32.2)} = 3.62 \text{ ft}$$

Acceleration Head in 6" Pipe

$$h_{a6} = \frac{(20)\,(0.81)\,(360)\,(0.066)}{(1.5)\,(32.2)} = 7.97 \text{ ft}$$

Total Acceleration Head

$$h_a = 3.62 + 7.97 = 11.6 \text{ ft}$$

Karassik et al[9] recommend that the NPSHA exceed the NPSHR by 3 to 5 psi for reciprocating pumps.

Pulsation — A pulsation dampener (suction stabilizer) is a device installed in the suction piping as close as possible to the pump to reduce pressure fluctuations at the pump. It consists of a small pressure vessel containing a cushion of gas (sometimes separated from the pumped fluid by a diaphragm). Pulsation dampeners should be considered for the suction side of any reciprocating pump, but they may not be required if the suction piping is oversized and short, or if the pump operates at less than 150 rpm. A properly installed and maintained pulsation dampener should absorb the cyclical flow variations so that the pressure fluctuations are about the same as those that occur when the suction piping is less than 15′ long.

Similar pressure fluctuations occur on the discharge side of every reciprocating pump. Pulsation dampeners are also effective in absorbing flow variations on the discharge side of the pump and should be considered if piping vibration caused by pressure fluctuations appears to be a problem. Pulsation dampener manufacturers have computer programs to analyze this phenomenon and should be consulted for reciprocating pump applications over 50 hp. Discharge pulsation dampeners minimize pressure peaks and contribute to longer pump and pump valve life. The need for pulsation dampeners is increased if multiple pump installations are involved.

Ensure that bladder type pulsation dampeners contain the correct amount of gas. The following equation may be used for sizing estimation of bladder and diaphragm-type pulsation dampeners, where the volume, length and area must be in self-consistent units.

$$V_{pd} = \frac{A \bullet L_s \bullet K \bullet (100/(100-\Delta))^{1/N}}{1-(100/(100+\Delta))^{1/N}} =$$

$$\frac{A \bullet L_s \bullet K \bullet (P_{ave}/P_{min})^{1/N}}{1-(P_{ave}/P_{max})^{1/N}} \qquad \textbf{Eq 12-18}$$

Where K has a value of:		
	Single Acting	Double Acting
Simplex	0.60	0.25
Duplex	0.25	0.15
Triplex	0.13	0.06
Quadruplex	0.10	0.06
Quintuplex	0.06	0.02

Capacity Control — Manual or automatic capacity control for one pump or several parallel pumps can be achieved by one or a combination of the following methods:

- on-off control
- recirculation
- variable speed driver or transmission
- variable displacement pump

Drivers — Two types of mechanisms are commonly used for driving reciprocating pumps; one in which the power of a motor or engine is transmitted to a shaft and there is a mechanism to convert its rotative movement to alternating linear movement to drive the pumping piston or plunger. In the other type, there is a power fluid, such as steam, compressed air, or gas acting on a piston, diaphragm or bellow linked to the pumping piston or plunger.

Piping — Suction and discharge piping considerations are similar to those for centrifugal pumps. In addition, acceleration head must be included for pipe sizing. For piping materials and thickness selection, pressure pulsations amplitude and fatigue life should be considered.

ROTARY PUMPS

The rotary pump is a positive displacement type that depends on the close clearance between both rotating and stationary surfaces to seal the discharge from the suction. The most common types of rotary pumps use gear or screw rotating elements. These types of positive displacement pumps are commonly used for viscous liquids for which centrifugal or reciprocating pumps are not suitable. Low viscosity liquids with poor lubricating properties (such as water) are not a proper application for gear or screw pumps.

REGENERATIVE PUMPS

Regenerative pumps are also called peripheral pumps. The unit has a rotary wheel or impeller with vanes on both sides of its periphery, which rotates in an annular shaped chamber in the pump casing. The fluid moves outwards through the vanes, at the vanes tips the fluid passes to the chamber and is recirculated back to a lower point on the impeller vanes; thus there are two fluid helical paths around the impeller and chamber, recirculating the fluid from vane to vane, from the suction to the discharge ports, on both sides of the impeller. The recirculation increases the head developed in each stage, so the head is a function of the number of recirculation cycles. Capacity, head and power, and speed follow fan laws.

Typically, the performance curve is a downward slope straight line; therefore, a throttling valve in a regenerative pump will permit more precise changes in flow than in centrifugal pumps. The maximum shut-off head developed may be up to 6 times the shut-off head of a single stage centrifugal pump running at the same speed.

Because of close clearances, regenerative pumps can not be used to pump liquids containing solid particles. They can pump liquids containing vapors and gases, if they contain sufficient liquid to seal the close clearances.

FIG. 12-19

Reciprocating Pump Acceleration Head Factors

C = 0.200 for simplex double-acting
= 0.200 for duplex single-acting
= 0.115 for duplex double-acting
= 0.066 for triplex single or double-acting
= 0.040 for quintuplex single or double-acting
= 0.028 for septuplex single or double-acting
= 0.022 for nonuplex single or double-acting

k = a factor related to the fluid compressibility

hot oil	2.5
most hydrocarbons	2.0
amine, glycol, water	1.5
deaerated water	1.4
liquid with small amounts of entrained gas	1.0

Note: "C" will vary from the listed values for unusual ratios of connecting rod length to crank radius over 6.

DIAPHRAGM PUMPS

Diaphragm pumps are reciprocating, positive displacement type pumps, utilizing a valving system similar to a plunger pump. These pumps can deliver a small, precisely controlled amount of liquid at a moderate to very high discharge pressure. Diaphragm pumps are commonly used as chemical injection pumps because of their controllable metering capability, the wide range of materials in which they can be fabricated, and their inherent leakproof design.

MULTIPHASE PUMPS

Multiphase pumps can pump immiscible liquids such as oil and water with gas. There are screw types and rotodynamic types. A progressive cavity design is used along the flow path to accommodate gas volume reduction caused by increased pressure. A full range of gas/liquid ratios can be handled. This class of pumps is of interest in applications where conventional pumps and separate compressors with or without separate pipelines are not economically feasible.

LOW TEMPERATURE PUMPS

Two types of centrifugal pumps have been developed for cryogenic applications: the external motor type and the submerged motor type.

External motor type — These pumps are of conventional configuration with a coupled driver and can be single or multistage. The pump assembly is usually mounted in a vessel from which it pumps.

Submerged motor type — This type of pump is characterized by being directly coupled to its motor, with the complete unit being submerged in the fluid.

Hydraulic Turbines

Many industrial processes involve liquid streams which flow from higher to lower pressures. Usually the flow is controlled with a throttling valve, hence the hydraulic energy is wasted. Up to 80% of this energy can be recovered by passing the liquid through a hydraulic power recovery turbine (HPRT). To justify the installation of an HPRT, an economic analysis of the power savings versus added equipment and installation costs should be performed.

TYPES OF HPRTs

Two major types of centrifugal hydraulic power recovery turbines are used.

1. Reaction—Single or multistage Francis-type rotor with fixed or variable guide vanes.
2. Impulse—Pelton Wheel, usually specified for relatively high differential pressures.

HPRTs with Francis-type rotors are similar to centrifugal pumps. In fact, a good centrifugal pump can be expected to operate with high efficiency as an HPRT when the direction of flow is reversed.

The Pelton Wheel or impulse runner type HPRT is used in high head applications. The impulse type turbine has a nozzle which directs the high pressure fluid against bowl-shaped buckets on the impulse wheel. This type of turbines' performance is dependent upon back pressure, while the reaction type is less dependent upon back pressure.

Power Recovered by HPRTs

The theoretical energy which can be extracted from a high pressure liquid stream by dropping it to a lower pressure through an HPRT can be calculated using the hydraulic horsepower. See Fig. 12-2 for bhp equation. Since some of the energy will be lost because of friction, the hydraulic horsepower must be multiplied by the efficiency of the HPRT.

In applications where the fluid that enters the HPRT has large dissolved gas content, the available power is larger than the power that may be calculated using the liquid equations, so, the power shall be calculated using an adequate two-phase calculation method.

The amount of power recovered by an HPRT is directly proportional to the efficiency rather than inversely proportional as is the case when calculating the power required by a pump. Thus, if a fluid is pumped to a high pressure and then reduced to its original pressure using an HPRT, the proportion of the pumping energy which can be supplied by the HPRT is equal to the efficiencies of the pump and turbine multiplied together. Typically, good centrifugal pumps and good HPRTs have efficiencies of between 70% and 80%. Thus, the HPRT can be expected to provide between 50% and 60% of the energy required for pumping.

Usually the high-pressure liquid contains a substantial amount of dissolved gas. The gas comes out of solution as the liquid pressure drops. This does not cause damage to the HPRT, presumably because the fluid velocity through the HPRT is high enough to maintain a froth-flow regime. The term NPSHR does not apply to HPRTs.

Applications

HPRTs may be used to drive any kind of rotating equipment (e.g. pumps, compressors, fans, electrical generators). The main problems are matching the power required by the driven load to that available from the HPRT and speed control. Both the power producer and the speed can be controlled by:

- throttling the liquid flow, either downstream or upstream from the HPRT
- allowing a portion of the liquid to bypass the HPRT
- adjusting inlet guide vanes installed in the HPRT

Sometimes HPRTs are installed with a "helper" driver. If this is an electric motor, the speed will be controlled by the motor speed.

Typical gas-processing streams for which HPRTs should be considered are:

- Rich sweetening solvents (e.g. amines, etc.)
- Rich absorption oil
- High-pressure crude oil.
- Condensed high pressure natural gas liquids.
- Liquid refrigerant letdown, in mechanical refrigeration cycles.

- High pressure LNG letdown, in natural gas liquefaction.

The lower limit of the power recovery which can be economically justified with single-stage HPRTs is about 30 hp and with multistage, about 100 hp. HPRTs usually pay out their capital cost in from one to three years.

Frequently, when an HPRT is to be used to drive a pump, both devices are purchased from one manufacturer. This has the advantage of ensuring that the responsibility for the entire installation is assumed by a single supplier.

The available pressure differential across the HPRT is calculated using a technique similar to that used to calculate the differential head of centrifugal pumps.

Example 12-5 — Specify an HPRT driven pump for a gas sweetening process.

Given:

lean DEA flow	1000 gpm
lean DEA temperature	110°F
lean DEA specific gravity	1.00
lean DEA vapor pressure at 120°F	1.7 psia
rich DEA flow	1000 gpm
rich DEA temperature	160°F
rich DEA specific gravity	1.01
pump suction total pressure	75 psig
pump discharge total pressure	985 psig
HPRT inlet total pressure	960 psig
HPRT outlet total pressure	85 psig

Solution:

For this example, the suction and discharge pressures have already been calculated using a technique similar to that suggested for centrifugal pumps.

$$\text{NPSHA for pump} = \frac{2.31\,(75 + 14.7 - 1.7)}{1.00} = 203\text{ ft}$$

$$\text{Required head for pump} = \frac{2.31\,(985 - 75)}{1.00} = 2102\text{ ft}$$

The pump selected is a 5-stage unit. From the pump curve (Fig. 12-21), the expected efficiency of the pump is 78.5%. Hence, the required power will be:

$$\text{bhp for pump} = \frac{(1000)\,(2102)\,(1.00)}{(3960)\,(0.785)} = 676\text{ hp}$$

$$\text{Available head for HPRT} = \frac{2.31\,(960 - 85)}{1.01} = 2001\text{ ft}$$

The HPRT selected is a 3-stage unit. From the performance curve (Fig. 12-20), the expected efficiency of the HPRT is 76%. Hence, the available power will be:

$$\text{bhp from HPRT} = \frac{(1000)\,(2001)\,(1.01)\,(0.76)}{3960} = 388\text{ hp}$$

FIG. 12-20

Rich DEA Pressure Letdown

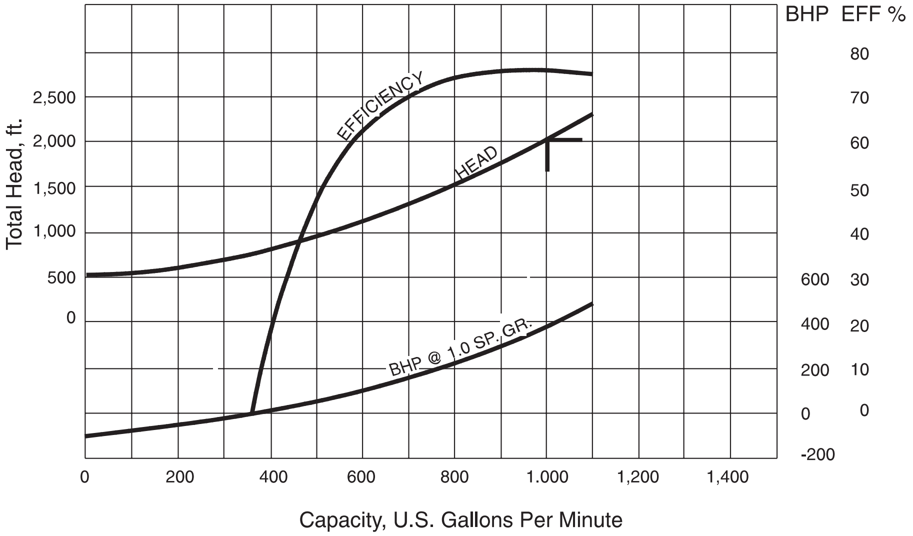

RICH DEA PRESSURE LETDOWN			
IMPELLER MAX DIA 10.06 IN	4 X 6 X 10 HORIZONTAL MULTISTAGE TURBINE		
MIN DIA	DIA IMPELLER 10.06 IN	IMPELLER PATT	3,560 RPM
EYE AREA SQ IN	NPSH REQUIRED	REFERENCE	DRAWING NO. HT-3X

FIG. 12-21

Lean Amine Charge Pump

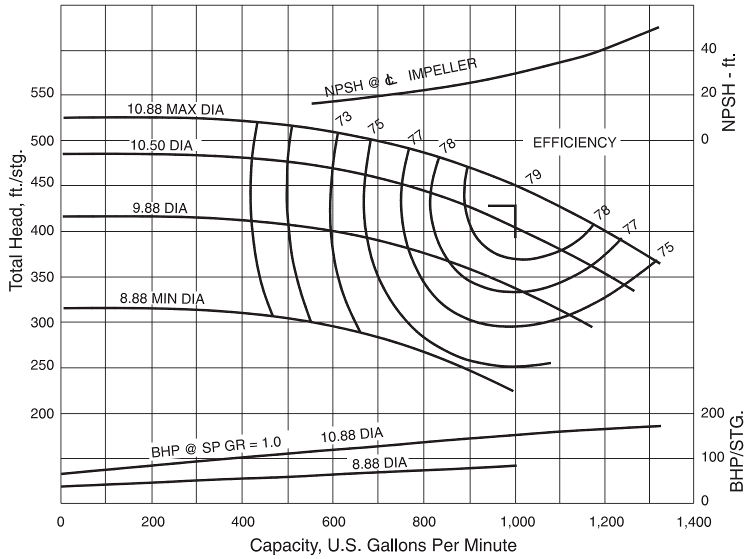

LEAN AMINE CHARGE PUMP					
IMPELLER MAX DIA	10.88	IN	4 X 6 X 10.5 HORIZONTAL MULTISTAGE PUMP		
MIN DIA	8.88	IN	DIA IMPELLER 10.63 IN	IMPELLER PATT	3,560 RPM
EYE AREA	13.0	SQ IN	NPSH REQUIRED	REFERENCE	CURVE NO. MD-38

Another driver, such as an electric motor, would be required for the pump to make up the difference in bhp between the pump and HPRT. The other driver would have to be capable of providing at least 288 hp. It is good practice to provide an electric motor driver large enough to drive the pump by itself to facilitate startups. The pump, HPRT, and electric motor driver (helper or full size) would usually be direct connected. In some cases, a clutch is used between the pump and HPRT, so the unit is independent of the HPRT.

The pump and HPRT are similar in hydraulic design except that the pump has five stages and the HPRT, three stages. In this case, the HPRT is a centrifugal pump running backwards.

CODES & ORGANIZATIONS

API Std 610 8th Edition—Centrifugal Pumps for General Refinery Service

ANSI B73.1—Horizontal End-Suction Centrifugal Pumps

ANSI B73.2—Vertical Inline Centrifugal Pumps

Hydraulic Institute—Centrifugal, Reciprocating & Rotary Pumps

API Std 674—Positive Displacement Pumps – Reciprocating

API Std 675—Positive Displacement pumps – Controlled Volume

API Std 676—Positive Displacement Pumps – Rotary

API Std 682—Shaft Sealing Systems for Centrifugal and Rotary Pumps.

ANSI/AWWA E101-88—Vertical Turbine Pumps – Line Shaft and Submersible Types

NEMA, EMMAC, UL, CSA—Electric Motor Drivers

UL, ULC, NFPA, FM—Fire Water Pumps

AIChE—American Institute of Chemical Engineers

API—American Petroleum Institute

ANSI—American National Standards Institute

AWWA—American Water Works Association

CSA—Canadian Standards Association

EMMAC—Electrical Manufacturers Association of Canada

FM—Factory Mutual

NEMA—National Electrical Manufacturers Association

NFPA—National Fire Prevention Association

UL—Underwriters Laboratory

ULC—Underwriters Laboratory of Canada

REFERENCES

1. API Standard 610, Eighth Edition, American Petroleum Institute, New York, 1995.
2. Bingham-Willamette Ltd., Sales Manual, Burnaby, B.C., Canada.
3. Doll, T. R., "Making the Proper Choice of Adjustable-speed Drives." Chem. Eng., v. 89, no. 16, August 9, 1982.
4. Evans, F. L., Jr., "Equipment Design Handbook for Refineries and Chemical Plants." Gulf Publishing Company, Houston, Texas, 1971, 1979.
5. Hydraulic Institute Standards, Fourteenth Edition, Hydraulic Institute, 2000.

6. Henshaw, T. L., "Reciprocating Pumps." Chem. Engr., v. 88, no. 19, Sept. 1981, p. 105-123.
7. Ingersoll-Rand Company, 1962, "A Pump Handbook for Salesmen."
8. Jennet, E., "Hydraulic Power Recovery System." Chem. Eng., v. 75, no. 8, April 1968, p. 159.
9. Karassik, I. J., Krutzch, W. C., Fraser, W. H. and Messina, J. P., "Pump Handbook." McGraw-Hill, Inc., 1976.
10. McClasky, B. M. and Lundquist, J. A., "Can You Justify Hydraulic Turbines?" Hyd. Proc., v. 56, no. 10, October 1976, p. 163.
11. Perry, R. H. and Chilton, C. H., Chemical Engineers Handbook, Fifth Edition, 1973, McGraw-Hill, Inc.
12. Purcell, J. M. and Beard, M. W., "Applying Hydraulic Turbines to Hydrocracking Operations." Oil Gas J., v. 65, no. 47, Nov. 20, 1967, p. 202.
13. Stepanoff, A. J., "Centrifugal and Axial Flow Pumps." John Wiley & Sons, Inc., 1948, 1957.
14. Tennessee Gas Transmission Co., "Operators Handbook for Gasoline Plants, Part 6-Rotary Pumps." Pet. Ref. (Now Hyd Proc) Nov. 1959, p. 307-308.
15. Westaway, C. R. and Loomis, A. W., Editors, Cameron Hydraulic Data, Fifteenth Edition, Ingersoll Rand Company, 1977.
16. Cody, D. J., Vandell, C. A., and Spratt, D., "Selecting Positive-Displacement Pumps." Chem. Engr., v. 92, no. 15, July 22, 1985, p. 38-52.
17. AIChE Publ. No. E-22, Second Edition, AIChE Equipment Testing Procedure, Centifugal Pumps, (Newtonian Liquids). New York. 1983.
18. ANSI/AWWA E101-88, American Water Works Association, Denver, 1988.

NOTES:

SECTION 13

Compressors and Expanders

Compressors

Depending on application, compressors are manufactured as positive-displacement, dynamic, or thermal type (Fig. 13-2).

Positive displacement types fall in two basic categories: reciprocating and rotary.

The reciprocating compressor consists of one or more cylinders each with a piston or plunger that moves back and forth, displacing a positive volume with each stroke.

The diaphragm compressor uses a hydraulically pulsed flexible diaphragm to displace the gas.

FIG. 13-1

Nomenclature

ACFM = actual cubic feet per minute (i.e. at process conditions)
A_p = cross sectional area of piston,sq in
A_r = cross sectional area of piston rod, sq in
Bhp = brake or shaft horsepower
C = cylinder clearance as a percent of cylinder volume
C_p = specific heat at constant pressure, Btu (lb • °F)
C_v = specific heat at constant volume, Btu (lb • °F)
D = cylinder inside diameter, in
d = piston rod diameter, in
EP = extracted horsepower of expander
F = an allowance for interstage pressure drop, Eq 13-4
Ghp = gas horsepower, actual compression horsepower, excluding mechanical losses, bhp
H = head, ft • lb/lb
h = enthalpy, Btu/lb
ICFM = inlet cubic feet per minute, usually at suction conditions
k = isentropic exponent, C_p/C_v
MC_p = molar specific heat at constant pressure, Btu (lb mole • °F)
MC_v = molar specific heat at constant volume, Btu (lb mole • °F)
MW = molecular weight, lb/lb mole
N = speed, rpm
N_m = molar flow, moles/min
n = polytropic exponent or number of moles
P = pressure, psia
P_c = critical pressure, psia
PD = piston displacement, ft^3/min
P_L = pressure base used in the contract or regulation, psia
pP_c = pseudo critical pressure, psia
P_R = reduced pressure, P/P_c
pT_c = pseudo critical temperature, °R
P_V = partial pressure of contained moisture, psia
p = pressure, lb/ft^2
Q = inlet capacity (ICFM)
Q_g = standard gas flow rate, MMSCFD

$$R = \text{universal gas constant} = 10.73 \frac{\text{psia} \bullet \text{ft}^3}{\text{lb mole} \bullet {}^\circ\text{R}}$$

$$= 1545 \frac{\text{lb/ft}^3}{\text{l mole} \bullet {}^\circ\text{R}} \text{ or } \frac{\text{ft} \bullet \text{lb}}{\text{lb mole } {}^\circ\text{R}}$$

$$= 1.986 \frac{\text{Btu}}{\text{lb mole} \bullet {}^\circ\text{R}}$$

r = compression ratio, P_2/P_1
s = entropy, Btu/(lb • °R)
SCFM = cubic feet per minute measured at 14.7 psia and 60°F
stroke = length of piston movement, in
T = absolute temperature, °R
T_c = critical temperature, °R
T_R = reduced temperature, T/T_c
t = temperature, °F
V = specific volume, ft^3/lb
VE = volumetric efficiency, percent
W = work, ft • lb
w = weight flow, lb/min
X = temperature rise factor
y = mole fraction
Z = compressibility factor
Z_{avg} = average compressibility factor = $(Z_s + Z_d)/2$
η = efficiency, expressed as a decimal

Subscripts

avg = average
d = discharge
g = gas
is = isentropic process
L = standard conditions used for calculation or contract
p = polytropic process
S = standard conditions, usually 14.7 psia,60°F
s = suction
t = total or overall
1 = inlet conditions
2 = outlet conditions

FIG. 13-2

Types of Compressors

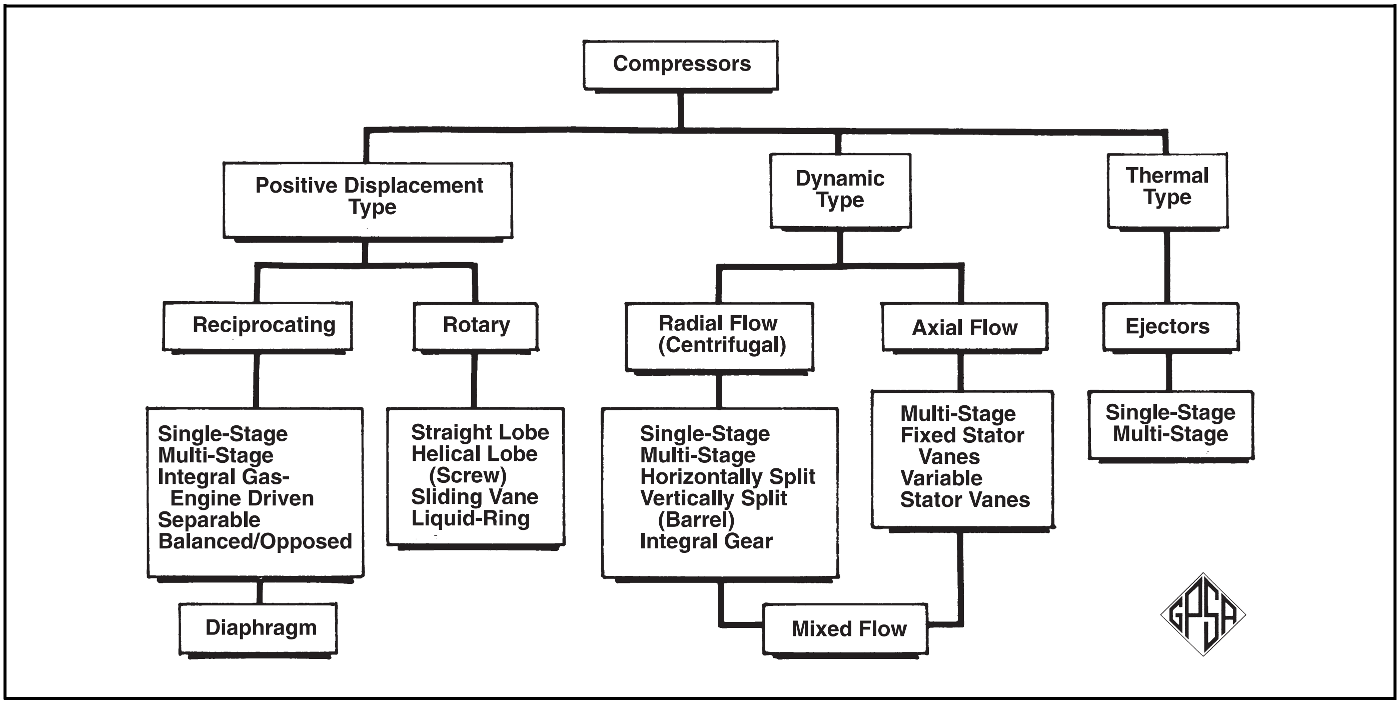

Rotary compressors cover lobe-type, screw-type, vane-type, and liquid ring type, each having a casing with one or more rotating elements that either mesh with each other such as lobes or screws, or that displace a fixed volume with each rotation.

The dynamic types include radial-flow (centrifugal), axial-flow, and mixed flow machines. They are rotary continuous-flow compressors in which the rotating element (impeller or bladed rotor) accelerates the gas as it passes through the element, converting the velocity head into static pressure, partially in the rotating element and partially in stationary diffusers or blades.

Ejectors are "thermal" compressors that use a high velocity gas or steam jet to entrain the inflowing gas, then convert the velocity of the mixture to pressure in a diffuser.

Fig. 13-3 covers the normal range of operation for compressors of the commercially available types.

The advantages of a centrifugal compressor over a reciprocating machine are:

1. Lower installed first cost where pressure and volume conditions are favorable,
2. Lower maintenance expense,
3. Greater continuity of service and dependability,
4. Less operating attention,
5. Greater volume capacity per unit of plot area,
6. Adaptability to high-speed low-maintenance-cost drivers.

The advantages of a reciprocating compressor over a centrifugal machine are:

1. Greater flexibility in capacity and pressure range,
2. Higher compressor efficiency and lower power cost,
3. Capability of delivering higher pressures,
4. Capability of handling smaller volumes,
5. Less sensitive to changes in gas composition and density.

RECIPROCATING COMPRESSORS

Reciprocating compressor ratings vary from fractional to more than 40,000 hp per unit. Pressures range from low vacuum at suction to 30,000 psi and higher at discharge for special process compressors.

Reciprocating compressors are furnished either single-stage or multi-stage. The number of stages is determined by the overall compression ratio. The compression ratio per stage (and valve life) is generally limited by the discharge temperature and usually does not exceed 4, although small-sized units (intermittent duty) are furnished with a compression ratio as high as 8.

Gas cylinders are generally lubricated, although a non-lubricated design is available when warranted; example: nitrogen, oxygen, and instrument air.

On multistage machines, intercoolers are normally provided between stages. These are heat exchangers which remove the heat of compression from the gas and reduce its temperature to approximately the temperature existing at the compressor intake. Such cooling reduces the actual volume of gas going to the high-pressure cylinders, reduces the horsepower required for compression, and keeps the temperature within safe operating limits.

Reciprocating compressors should be supplied with clean gas as they cannot satisfactorily handle liquids and solid particles that may be entrained in the gas. Liquids and solid particles tend to destroy cylinder lubrication and cause excessive

FIG. 13-3

Compressor Coverage Chart

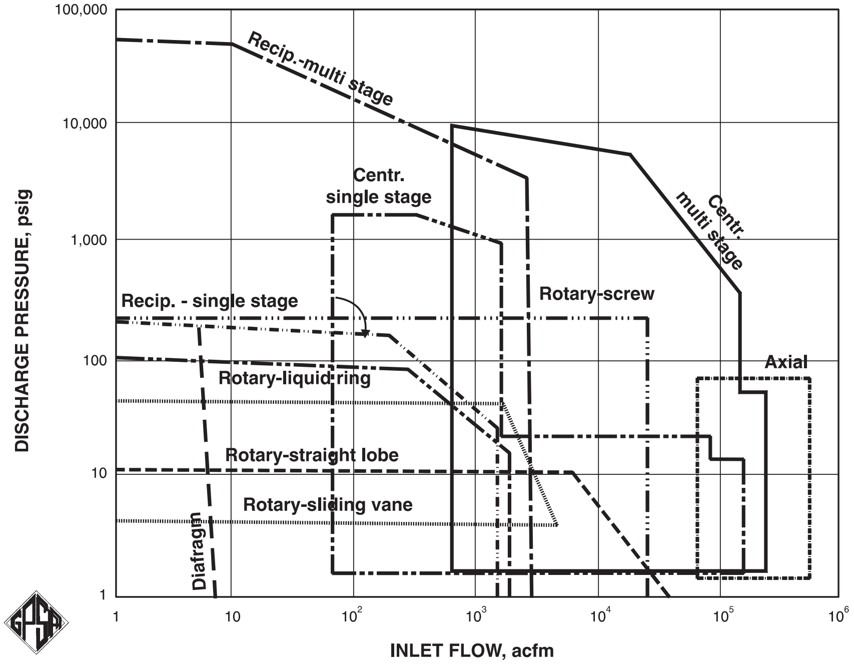

wear. Liquids are non-compressible and their presence could rupture the compressor cylinder or cause other major damage.

Reciprocating compressors are typically designed to one of the following industry standard specifications:

API Standard 618 "Reciprocating Compressors for Petroleum, Chemical, and Gas Industry Services."

API Specification 11P "Specification for Packaged Reciprocating Compressors for Oil & Gas Production Services."

API 618 covers low to moderate speed compressors, typically in the 300–700 rpm speed range. These compressors may be of a separable design, typically electric motor driven, although an "integral" design is also fairly common. An integral design refers to a compressor driven by a gas engine where the power cylinders of the engine that turn the crankshaft are in the same housing as the gas compression cylinders (see Fig. 13-4).

FIG. 13-4

Integral Engine Compressor

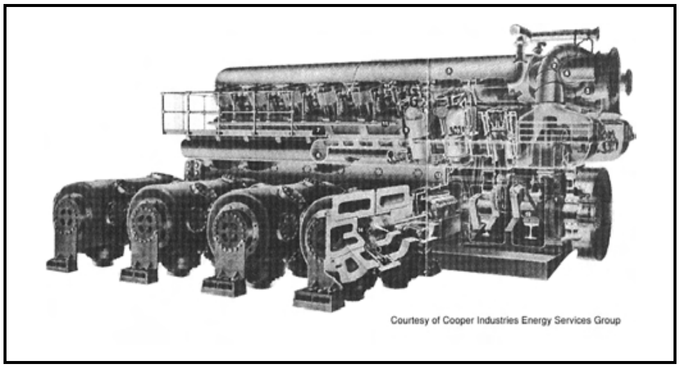

Courtesy of Cooper Industries Energy Services Group

Separable API 618 compressors have historically been used in refineries and chemical plants, normally electric motor driven, although they are also used in gas plant service. In the past, integral compressors were often used in pipeline boosting service as well as inlet compression service at field gas plants.

API 11P covers packaged high-speed separable compressors with speeds from 900–1800 rpm. These compressors are normally driven by electric motors or gas engines, and are often used for field gas compression applications, including gas plants.

Comparison of API 11P and 618 Compressors		
	API 618	**API 11P**
Horsepower	1500–34 000	35–2200
Speed	300–700	900–1800
Size & weight	Larger	Smaller
Efficiency	High	Moderate
Operating life	Longer	Shorter
Maintenance costs	Lower	Higher
Purchase cost	Higher	Lower
Installation cost	Higher	Lower

Performance Calculations

The engineer in the field is frequently required to:

1. determine the approximate horsepower required to compress a certain volume of gas from some intake conditions to a given discharge pressure, and

2. estimate the capacity of an existing compressor under specified suction and discharge conditions.

The following text outlines procedures for making these calculations from the standpoint of quick estimates and also presents more detailed calculations. For specific information on a given compressor, consult the manufacturer of that unit.

For a compression process, the enthalpy change is the best way of evaluating the work of compression. If a P-H diagram is available (as for propane refrigeration systems), the work of compression would always be evaluated by the enthalpy change of the gas in going from suction to discharge conditions. Years ago the capability of easily generating P-H diagrams for natural gases did not exist. The result was that many ways of estimating the enthalpy change were developed. They were used as a crutch and not because they were the best way to evaluate compression horsepower requirements.

Today the engineer does have available, in many cases, the capability to generate that part of the P-H diagram required for compression purposes. This is done using equations of state on a computer. This still would be the best way to evaluate the compression horsepower. The other equations are used only if access to a good equation of state is not available.

Section 13 continues to treat reciprocating and centrifugal machines as being different so far as estimation of horsepower requirements is concerned. This treatment reflects industry practice. The only difference in the horsepower evaluation is the efficiency of the machine. Otherwise the basic thermodynamic equations are the same for all compression.

The reciprocating compressor horsepower calculations presented are based on charts. However, they may equally well be calculated using the equations in the centrifugal compressor section, particularly Eqs. 13-25 through 13-43. This also includes the mechanical losses in Eqs. 13-37 and 13-38.

There are two ways in which the thermodynamic calculations for compression can be carried out — by assuming:

1. isentropic reversible path — a process during which there is no heat added to or removed from the system and the entropy remains constant, pv^k = constant
2. polytropic reversible path — a process in which changes in gas characteristics during compression are considered, pv^n = constant

Fig. 13-5 shows a plot of pressure vs. volume for each value of exponent n. The work, W, performed in proceeding from p_1 to p_2 along any polytropic curve (Fig. 13-5) is

$$W = \int_1^2 V \bullet dp = \int_{p_1}^{p_2} V \bullet dp \qquad \textbf{Eq 13-1}$$

The amount of work required is dependent upon the polytropic curve involved and increases with increasing values of n. The path requiring the least amount of input work is n = 1, which is equivalent to isothermal compression, a process during which there is no change in temperature. For isentropic compression, n = k = ratio of specific heat at constant pressure to that at constant volume.

It is usually impractical to build sufficient heat-transfer equipment into the design of most compressors to carry away the bulk of the heat of compression. Most machines tend to operate along a polytropic path which approaches the isentropic. Most compressor calculations are therefore based on an efficiency applied to account for true behavior.

FIG. 13-5

Compression Curves

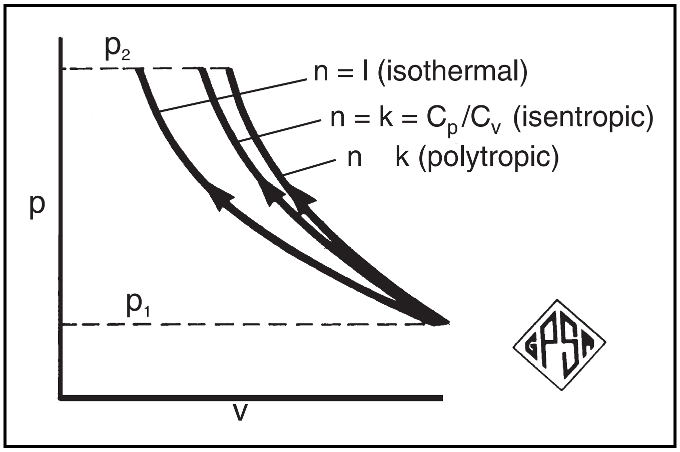

A compression process following the middle curve in Fig. 13-5 has been widely referred to in industry as "adiabatic". However, all compression processes of practical importance are adiabatic. The term adiabatic does not adequately describe this process, since it only implies no heat transfer. The ideal process also follows a path of constant entropy and should be called "isentropic", as will be done subsequently in this chapter.

Eq 13-3 which applies to all ideal gases can be used to calculate k.

$$MC_p - MC_v = R = 1.986 \text{ Btu/(lbmol} \bullet \text{°F)} \qquad \textbf{Eq 13-2}$$

By rearrangement and substitution we obtain:

$$k = \frac{C_p}{C_v} = \frac{MC_p}{MC_v} = \frac{MC_p}{MC_p - 1.986} \qquad \textbf{Eq 13-3}$$

To calculate k for a gas we need only know the constant pressure molar heat capacity (MC_p) for the gas. Fig. 13-6 gives values of molecular weight and ideal-gas state heat capacity (i.e. at 1 atm) for various gases. The heat capacity varies considerably with temperature. Since the temperature of the gas increases as it passes from suction to discharge in the compressor, k is normally determined at the average of suction and discharge temperatures.

For a multi-component gas, the mole weighted average value of molar heat capacity must be determined at average cylinder temperature. A sample calculation is shown in Fig. 13-7.

The calculation of pP_c and pT_c in Fig. 13-7 permits calculation of the reduced pressure $P_R = P/pP_c$ mix and reduced temperature $T_R = T/pT_c$ mix. The compressibility Z at T and P can then be determined using the charts in Section 23.

If only the molecular weight of the gas is known and not its composition, an approximate value for k can be determined from the curves in Fig. 13-8.

Estimating Compressor Horsepower

Eq 13-4 is useful for obtaining a quick and reasonable estimate for compressor horsepower. It was developed for large slow-speed (300 to 450 rpm) compressors handling gases with a specific gravity of 0.65 and having stage compression ratios above 2.5.

FIG. 13-6

Molar Heat Capacity MC_p (Ideal-Gas State), Btu/(lb mol • °R)

*Data source: Selected Values of Properties of Hydrocarbons, API Research Project 44; MW updated to agree with Fig. 23-2

Gas	Chemical formula	Mol wt	Temperature							
			0°F	50°F	60°F	100°F	150°F	200°F	250°F	300°F
Methane	CH_4	16.043	8.23	8.42	8.46	8.65	8.95	9.28	9.64	10.01
Ethyne (Acetylene)	C_2H_2	26.038	9.68	10.22	10.33	10.71	11.15	11.55	11.90	12.22
Ethene (Ethylene)	C_2H_4	28.054	9.33	10.02	10.16	10.72	11.41	12.09	12.76	13.41
Ethane	C_2H_6	30.070	11.44	12.17	12.32	12.95	13.78	14.63	15.49	16.34
Propene (Propylene)	C_3H_6	42.081	13.63	14.69	14.90	15.75	16.80	17.85	18.88	19.89
Propane	C_3H_8	44.097	15.65	16.88	17.13	18.17	19.52	20.89	22.25	23.56
1-Butene (Butlyene)	C_4H_8	56.108	17.96	19.59	19.91	21.18	22.74	24.26	25.73	27.16
cis-2-Butene	C_4H_8	56.108	16.54	18.04	18.34	19.54	21.04	22.53	24.01	25.47
trans-2-Butene	C_4H_8	56.108	18.84	20.23	20.50	21.61	23.00	24.37	25.73	27.07
iso-Butane	C_4H_{10}	58.123	20.40	22.15	22.51	23.95	25.77	27.59	29.39	31.11
n-Butane	C_4H_{10}	58.123	20.80	22.38	22.72	24.08	25.81	27.55	29.23	30.90
iso-Pentane	C_5H_{12}	72.150	24.94	27.17	27.61	29.42	31.66	33.87	36.03	38.14
n-Pentane	C_5H_{12}	72.150	25.64	27.61	28.02	29.71	31.86	33.99	36.08	38.13
Benzene	C_6H_6	78.114	16.41	18.41	18.78	20.46	22.45	24.46	26.34	28.15
n-Hexane	C_6H_{14}	86.177	30.17	32.78	33.30	35.37	37.93	40.45	42.94	45.36
n-Heptane	C_7H_{16}	100.204	34.96	38.00	38.61	41.01	44.00	46.94	49.81	52.61
Ammonia	NH_3	17.0305	8.52	8.52	8.52	8.52	8.52	8.53	8.53	8.53
Air		28.9625	6.94	6.95	6.95	6.96	6.97	6.99	7.01	7.03
Water	H_2O	18.0153	7.98	8.00	8.01	8.03	8.07	8.12	8.17	8.23
Oxygen	O_2	31.9988	6.97	6.99	7.00	7.03	7.07	7.12	7.17	7.23
Nitrogen	N_2	28.0134	6.95	6.95	6.95	6.96	6.96	6.97	6.98	7.00
Hydrogen	H_2	2.0159	6.78	6.86	6.87	6.91	6.94	6.95	6.97	6.98
Hydrogen sulfide	H_2S	34.08	8.00	8.09	8.11	8.18	8.27	8.36	8.46	8.55
Carbon monoxide	CO	28.010	6.95	6.96	6.96	6.96	6.97	6.99	7.01	7.03
Carbon dioxide	CO_2	44.010	8.38	8.70	8.76	9.00	9.29	9.56	9.81	10.05

* Exceptions: Air - Keenan and Keyes, Thermodynamic Properties of Air, Wiley, 3rd Printing 1947. Ammonia - Edw. R. Grabl, Thermodynamic Properties of Ammonia at High Temperatures and Pressures, Petr. Processing, April 1953. Hydrogen Sulfide - J. R. West, Chem. Eng. Progress, 44, 287, 1948.

FIG. 13-7

Calculation of k

Example gas mixture		Determination of mixture mol weight		Determination of MC_p, Molar heat capacity		Determination of pseudo critical pressure, pP_c, and temperature, pT_c			
Component name	Mol fraction y	Individual Component Mol weight MW	$y \cdot MW$	Individual Component MC_p @ 150°F*	$y \cdot MC_p$ @ 150°F	Component critical pressure P_c psia	$y \cdot P_c$	Component critical temperature T_c°R	$y \cdot T_c$
methane	0.9216	16.04	14.782	8.95	8.248	666	615.6	343	316.1
ethane	0.0488	30.07	1.467	13.78	0.672	707	34.6	550	26.8
propane	0.0185	44.10	0.816	19.52	0.361	616	11.4	666	12.3
i-butane	0.0039	58.12	0.227	25.77	0.101	528	2.1	734	2.9
n-butane	0.0055	58.12	0.320	25.81	0.142	551	3.0	765	4.2
i-pentane	0.0017	72.15	0.123	31.66	0.054	490	0.8	829	1.4
Total	1.0000	MW =	17.735	MC_p =	9.578	pP_c =	667.5	pT_c =	363.7
$MC_v = MC_p - 1.986 = 7.592$					$k = MC_p/MC_v = 9.578/7.592 = 1.26$				
*For values of MC_p other than @ 150°F, refer to Fig. 13-6									

FIG. 13-8

Approximate Heat-Capacity Ratios of Hydrocarbon Gases

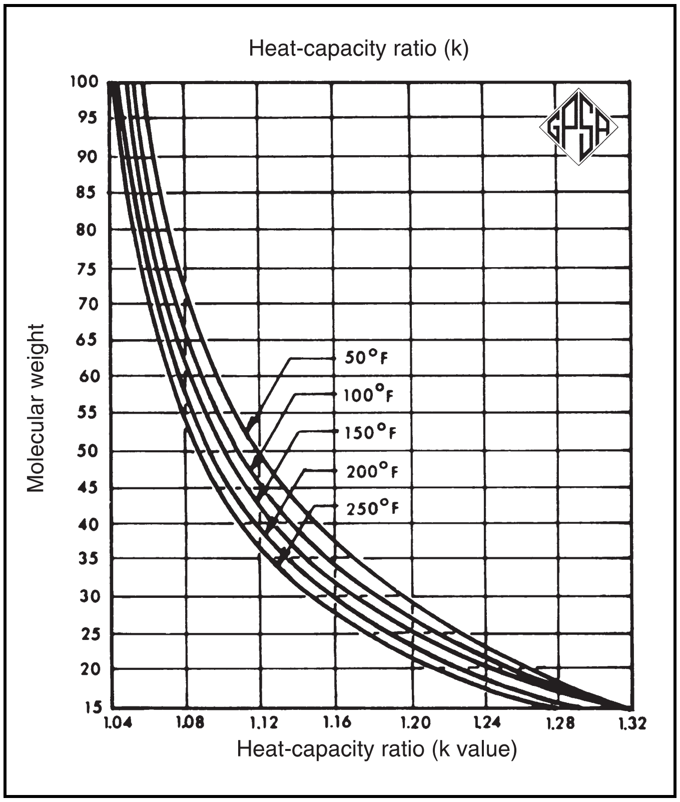

CAUTION: Compressor manufacturers generally rate their machines based on a standard condition of 14.4 psia rather than the more common gas industry value of 14.7 psia.

Due to higher valve losses, the horsepower requirement for high-speed compressors (1000 rpm range, and some up to 1800 rpm) can be as much as 20% higher, although this is a very arbitrary value. Some compressor designs do not merit a higher horsepower allowance and the manufacturers should be consulted for specific applications.

$$\text{Brake horsepower} = (22)\left(\frac{\text{ratio}}{\text{stage}}\right)(\text{\# of stages})\,(\text{MMcfd})\,(\text{F}) \qquad \textbf{Eq 13-4}$$

Where:

MMcfd = Compressor capacity referred to 14.4 psia and intake temperature

F = 1.0 for single-stage compression
1.08 for two-stage compression
1.10 for three-stage compression

Eq 13-4 will also provide a rough estimate of horsepower for lower compression ratios and/or gases with a higher specific gravity, but it will tend to be on the high side. To allow for this tendency use a multiplication factor of 20 instead of 22 for gases with a specific gravity in the 0.8 to 1.0 range; likewise, use a factor in the range of 16 to 18 for compression ratios between 1.5 and 2.0.

Curves are available which permit easy estimation of approximate compression-horsepower requirements. Fig. 13-9 is typical of these curves.

Example 13-1 — Compress 2 MMcfd of gas at 14.4 psia and intake temperature through a compression ratio of 9 in a 2-stage compressor. What will be the horsepower?

Solution Steps

$$\text{Ratio per stage} = \sqrt{9} = 3$$

From Eq 13-4 we find the brake horsepower to be:

$$(22)\,(3)\,(2)\,(2)\,(1.08) = 285 \text{ Bhp}$$

From Fig. 13-9, using a k of 1.15, we find the horsepower requirement to be 136 Bhp/MMcfd or 272 Bhp. For a k of 1.4, the power requirement would be 147 Bhp/MMcfd or 294 total horsepower.

The two procedures give reasonable agreement, particularly considering the simplifying assumptions necessary in reducing compressor horsepower calculations to such a simple procedure.

Detailed Calculations

There are many variables which enter into the precise calculation of compressor performance. Generalized data as given in this section are based upon the averaging of many criteria. The results obtained from these calculations, therefore, must be considered as close approximations to true compressor performance.

Capacity

Most gases encountered in industrial compression do not exactly follow the ideal gas equation of state but differ in varying degrees. The degree in which any gas varies from the ideal is expressed by a compressibility factor, Z, which modifies the ideal gas equation:

$$PV = nRT \qquad \textbf{Eq 13-5}$$

to

$$PV = nZRT \qquad \textbf{Eq 13-6}$$

Compressibility factors can be determined from charts in Section 23 using the pP_R and pT_R of the gas mixture. For pure components such as propane, compressibility factors can be determined from the P-H diagrams, although the user would be better advised to determine the compression horsepower using the P-H diagram (see Section 24).

For the purpose of performance calculations, compressor capacity is expressed as the actual volumetric quantity of gas at the inlet to each stage of compression on a per minute basis (ICFM).

From SCFM

$$Q = \text{SCFM}\left(\frac{14.7}{520}\right)\left(\frac{T_1 Z_1}{P_1 Z_L}\right) \qquad \textbf{Eq 13-7}$$

From weight flow (w, lb/min)

$$Q = \frac{10.73}{MW}\left(\frac{w\,T_1\,Z_1}{P_1\,Z_L}\right) \qquad \textbf{Eq 13-8}$$

From molar flow (Nm, mols/min)

$$Q = \left(\frac{379.5 \cdot 14.7}{520}\right)\left(\frac{N_m\,T_1\,Z_1}{P_1\,Z_L}\right) \qquad \textbf{Eq 13-9}$$

From these equations, inlet volume to any stage may be calculated by using the inlet pressure P_1 and temperature T_1. Moisture should be handled just as any other component in the gas.

FIG. 13-9

Approximate Horsepower Required to Compress Gases

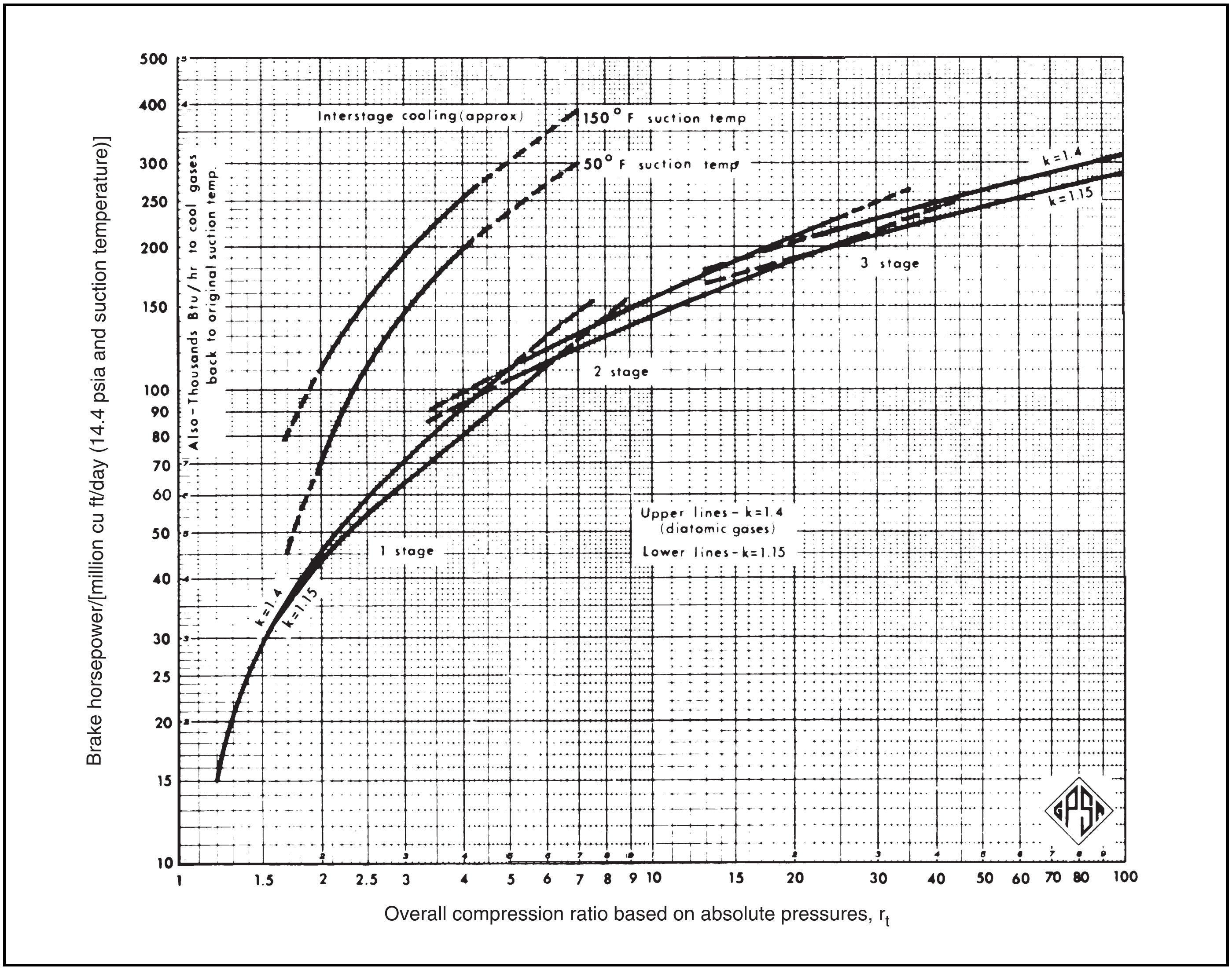

In a reciprocating compressor, effective capacity may be calculated as the piston displacement (generally in cu ft/min) multiplied by the volumetric efficiency.

The piston displacement is equal to the net piston area multiplied by the length of piston sweep in a given period of time. This displacement may be expressed:

For a single-acting piston compressing on the outer end only,

$$PD = \frac{(\text{stroke})\,(N)\,(D^2)\,\pi}{(4)\bullet(1728)} \qquad \textbf{Eq 13-10}$$

$$= 4.55\,(10^{-4})\,(\text{stroke})\,(N)\,(D^2)$$

For a single-acting piston compressing on the crank end only,

$$PD = \frac{(\text{stroke})\,(N)\,(D^2 - d^2)\,\pi}{(4)\bullet(1728)} \qquad \textbf{Eq 13-11}$$

$$= 4.55\,(10^{-4})\,(\text{stroke})\,(N)\,(D^2 - d^2)$$

For a double-acting piston (other than tail rod type),

$$PD = \frac{(\text{stroke})\,(N)\,(2\,D^2 - d^2)\,\pi}{(4)\bullet(1728)} \qquad \textbf{Eq 13-12}$$

$$= 4.55\,(10^{-4})\,(\text{stroke})\,(N)\,(2\,D^2 - d^2)$$

Volumetric Efficiency

In a reciprocating compressor, the piston does not travel completely to the end of the cylinder at the end of the discharge stroke. Some clearance volume is necessary and it includes the space between the end of the piston and the cylinder head when the piston is at the end of its stroke. It also includes the volume in the valve ports, the volume in the suction valve guards, and the volume around the discharge valve seats.

Clearance volume is usually expressed as a percent of piston displacement and referred to as percent clearance, or cylinder clearance, C.

$$C = \frac{\text{clearance volume, cu in.}}{\text{piston displacement, cu in.}}\,(100) \qquad \textbf{Eq 13-13}$$

For double acting cylinders, the percent clearance is based on the total clearance volume for both the head end and the crank end of a cylinder. These two clearance volumes are not the same due to the presence of the piston rod in the crank end of the cylinder. Sometimes additional clearance volume (external) is intentionally added to reduce cylinder capacity.

The term “volumetric efficiency” refers to the actual pumping capacity of a cylinder compared to the piston displacement. Without a clearance volume for the gas to expand and delay the opening of the suction valve(s), the cylinder could deliver its entire piston displacement as gas capacity. The effect of the gas contained in the clearance volume on the pumping capacity of a cylinder can be represented by:

$$VE = 100 - r - C\left[\frac{Z_s}{Z_d}\left(r^{1/k}\right) - 1\right] \qquad \textbf{Eq 13-14}$$

Volumetric efficiencies as determined by Eq. 13-14 are theoretical in that they do not account for suction and discharge valve losses. The suction and discharge valves are actually spring-loaded check valves that permit flow in one direction only. The springs require a small differential pressure to open. For this reason, the pressure within the cylinder at the end of the suction stroke is lower than the line suction pressure and, likewise, the pressure at the end of the discharge stroke is higher than line discharge pressure.

One method for accounting for suction and discharge valve losses is to reduce the volumetric efficiency by an arbitrary amount, typically 4%, thus modifying Eq. 13-14 as follows:

$$VE = 96 - r - C\left[\frac{Z_s}{Z_d}\left(r^{1/k}\right) - 1\right] \qquad \textbf{Eq 13-15}$$

When a non-lubricated compressor is used, the volumetric efficiency should be corrected by subtracting an additional 5% for slippage of gas. This is a capacity correction only and, as a first approximation, would not be considered when calculating compressor horsepower. The energy of compression is used by the gas even though the gas slips by the rings and is not discharged from the cylinder.

If the compressor is in propane, or similar heavy gas service, an additional 4% should be subtracted from the volumetric efficiency. These deductions for non-lubricated and propane performance are both approximate and, if both apply, cumulative.

Fig. 13-10 provides the solution to the function $r^{1/k}$. Values for compression ratios not shown may be obtained by interpo-

FIG. 13-10

Values of $r^{1/k}$

Compression Ratio	k, isentropic exponent C_p/C_v								
	1.10	**1.14**	**1.18**	**1.22**	**1.26**	**1.30**	**1.34**	**1.38**	**1.42**
1.2	1.180	1.173	1.167	1.161	1.156	1.151	1.146	1.141	1.137
1.4	1.358	1.343	1.330	1.318	1.306	1.295	1.285	1.276	1.267
1.6	1.533	1.510	1.489	1.470	1.452	1.436	1.420	1.406	1.392
1.8	1.706	1.675	1.646	1.619	1.594	1.572	1.551	1.531	1.513
2.0	1.878	1.837	1.799	1.765	1.733	1.704	1.677	1.652	1.629
2.2	2.048	1.997	1.951	1.908	1.870	1.834	1.801	1.771	1.742
2.4	2.216	2.155	2.100	2.050	2.003	1.961	1.922	1.886	1.852
2.6	2.384	2.312	2.247	2.188	2.135	2.086	2.040	1.999	1.960
2.8	2.550	2.467	2.393	2.326	2.264	2.208	2.156	2.109	2.065
3.0	2.715	2.621	2.537	2.461	2.391	2.328	2.270	2.217	2.168
3.2	2.879	2.774	2.680	2.595	2.517	2.447	2.382	2.323	2.269
3.4	3.042	2.926	2.821	2.727	2.641	2.563	2.492	2.427	2.367
3.6	3.204	3.076	2.961	2.857	2.764	2.679	2.601	2.530	2.465
3.8	3.366	3.225	3.100	2.987	2.885	2.792	2.708	2.631	2.560
4.0	3.526	3.374	3.238	3.115	3.005	2.905	2.814	2.731	2.655
4.2	3.686	3.521	3.374	3.242	3.124	3.016	2.918	2.829	2.747
4.4	3.846	3.668	3.510	3.368	3.241	3.126	3.021	2.926	2.839
4.6	4.004	3.814	3.645	3.493	3.357	3.235	3.123	3.022	2.929
4.8	4.162	3.959	3.779	3.617	3.473	3.342	3.224	3.116	3.018
5.0	4.319	4.103	3.912	3.740	3.587	3.449	3.324	3.210	3.106
5.2	4.476	4.247	4.044	3.863	3.700	3.554	3.422	3.303	3.193
5.4	4.632	4.390	4.175	3.984	3.813	3.659	3.520	3.394	3.279
5.6	4.788	4.532	4.306	4.105	3.925	3.763	3.617	3.485	3.364
5.8	4.943	4.674	4.436	4.224	4.035	3.866	3.713	3.574	3.448
6.0	5.098	4.815	4.565	4.343	4.146	3.968	3.808	3.663	3.532
6.2	5.252	4.955	4.694	4.462	4.255	4.069	3.902	3.751	3.614
6.4	5.406	5.095	4.822	4.579	4.363	4.170	3.996	3.839	3.696
6.6	5.560	5.235	4.949	4.696	4.471	4.270	4.089	3.925	3.777
6.8	5.713	5.374	5.076	4.813	4.578	4.369	4.181	4.011	3.857

lation. The closest k value column may be safely used without a second interpolation.

Volumetric efficiencies for "high speed" separable compressors in the past have tended to be slightly lower than estimated from Eq 13-14. Recent information suggests that this modification is not necessary for all models of high speed compressors.

In evaluating efficiency, horsepower, volumetric efficiency, etc., the user should consider past experience with different speeds and models. Larger valve area for a given swept volume will generally lead to higher compression efficiencies.

Equivalent Capacity

The net capacity for a compressor, in cubic feet per day @ 14.4 psia and suction temperature, may be calculated by Eq. 13-16a which is shown in dimensioned form:

$$\text{MMcfd} = \frac{\text{PD}\ \frac{\text{ft}^3}{\text{min}} \bullet 1400\ \frac{\text{min}}{\text{d}} \bullet \frac{\text{VE\%}}{100} \bullet P_s\ \frac{\text{lb}}{\text{in}^2} \bullet 10^{-6} \frac{\text{MMft}^3}{\text{ft}^3} \bullet Z_{14.4}}{14.4\ \frac{\text{lb}}{\text{in}^2} \bullet Z_s}$$

Eq 13-16a

which can be simplified to Eq. 13-16b when $Z_{14.4}$ is assumed to equal 1.0.

$$\text{MMcfd} = \frac{\text{PD} \bullet \text{VE} \bullet P_s \bullet 10^{-6}}{Z_s} \qquad \textbf{Eq 13-16b}$$

For example, a compressor with 200 cu ft/min piston displacement, a volumetric efficiency of 80%, a suction pressure of 75 psia, and suction compressibility of 0.9 would have a capacity of 1.33 MMcfd at 14.4 psia and suction temperature. If compressibility is not used as a divisor in calculating cu ft/min, then the statement "not corrected for compressibility" should be added.

In many instances the gas sales contract or regulation will specify some other measurement standard for gas volume. To convert volumes calculated using Equation 13-16 (i.e. at 14.4 psia and suction temperature) to a P_L and T_L basis, Eq 13-17 would be used:

$$\text{MMscfd at } P_L, T_L = (\text{MMcfd from Eq 13–16}) \left(\frac{14.4}{P_L}\right)\left(\frac{T_L}{T_s}\right)\left(\frac{Z_L}{Z_s}\right)$$

Eq 13-17

Discharge Temperature

The temperature of the gas discharged from the cylinder can be estimated from Eq 13-18, which is commonly used but not recommended. (Note: the temperatures are in absolute units, °R or K.) Eqs 13-31 and 13-32 give better results.

$$T_d = T_s (r^{(k-1)/k}) \qquad \textbf{Eq 13-18}$$

The discharge temperature determined from Eq 13-18 is the theoretical value. While it neglects heat from friction, irreversibility effects, etc., and may be somewhat low, the values obtained from this equation will be reasonable field estimates.

Rod Loading

Each compressor frame has definite limitations as to maximum speed and load-carrying capacity. The load-carrying capacity of a compressor frame involves two primary considerations: horsepower and rod loading.

The horsepower rating of a compressor frame is the measure of the ability of the supporting structure and crankshaft to withstand torque (turning force) and the ability of the bearings to dissipate frictional heat. Rod loads are established to limit the static and inertial loads on the crankshaft, connecting rod, frame, piston rod, bolting, and projected bearing surfaces.

Good design dictates a reversal of rod loading during each stroke. Non-reversal of the loading results in failure to allow bearing surfaces to part and permit entrance of sufficient lubricant. The result will be premature bearing wear or failure.

Rod loadings may be calculated by the use of Eqs 13-19 and 13-20.

$$\begin{aligned}\text{Load in compression} &= P_d A_p - P_s (A_p - A_r)\\ &= (P_d - P_s) A_p + P_s A_r \qquad \textbf{Eq 13-19}\end{aligned}$$

Rod in Compression

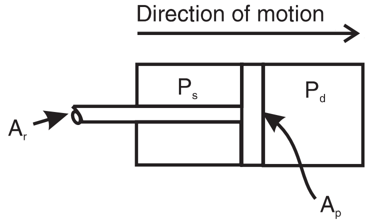

$$\begin{aligned}\text{Load in tension} &= P_d (A_p - A_r) - P_s A_p\\ &= (P_d - P_s) A_p - P_d A_r \qquad \textbf{Eq 13-20}\end{aligned}$$

Rod in Tension

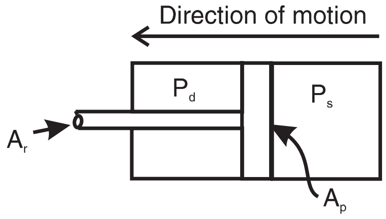

Using Eqs. 13-19 and 13-20, a plus value for the load in both compression and tension indicates a reversal of loads based on gas pressure only. Inertial effects will tend to increase the degree of reversal.

The true rod loads would be those calculated using internal cylinder pressures after allowance for valve losses. Normally, the operator will know only line pressures, and because of this, manufacturers generally rate their compressors based on line-pressure calculations.

A further refinement in the rod-loading calculation would be to include inertial forces. While the manufacturer will consider inertial forces when rating compressors, useful data on this point is seldom available in the field. Except in special cases, inertial forces are ignored.

A tail-rod cylinder would require consideration of rod cross-section area on both sides of the piston instead of on only one side of the piston, as in Eqs 13-19 and 13-20.

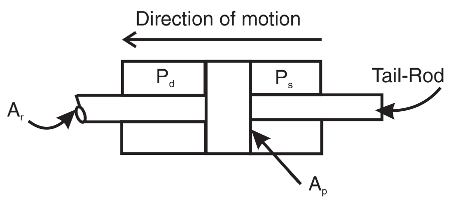

Detailed Horsepower Calculation

A more detailed calculation of reciprocating compressor power requirements can be performed using the following equation:

$$\text{BHP/stage} = 3.03 \bullet Z_{avg} \bullet [Q_g T_s/E] \bullet (k/(k\text{-}1)) \bullet \left(\frac{P_L}{T_L}\right) \bullet [(P_d/P_s)^{((k-1)/k)}\text{-}1] \qquad \textbf{Eq 13-21}$$

BHP = brake horsepower
Q_g = gas flow rate, MMSCFD
T_s = suction temperature, °R
Z_{avg} = $(Z_s+Z_d)/2$
Z_s = suction compressibility factor
Z_d = discharge compressibility factor
E = overall efficiency
  High speed reciprocating units — 0.82
  Low speed reciprocating units — 0.85
K = ratio of specific heats, Cp/Cv
P_s = suction pressure, psia
P_d = discharge pressure, psia
P_L= standard pressure, psia
T_L= standard temperature, °R

The total horsepower for the compressor is the sum of the horsepower required for each of the stages that are utilized. For multistage machines an allowance should be made for the interstage pressure drop associated with piping, cooler, scrubber, etc., typically 5–10 psi.

Procedure

1. Calculate overall compression ratio ($r_t = P_{dfinal} – P_s$).
2. Calculate the compression ratio per stage, r, by taking the s root of r_t, where s is the number of compression stages. The number of stages, s, should be increased until the ratio per stage, r, is < ~ 4. This should generally result in stage discharge temperatures of < 300°F depending on the interstage cooler outlet temperature assumed.
3. Multiplying r by the absolute suction pressure of the stage being considered will give you discharge pressure of the stage.
4. Calculate the horsepower required for the stage using Eq 13-21.
5. Substract the assumed interstage pressure loss from the discharge pressure of the preceding stage to obtain the suction pressure for the next stage.
6. Repeat steps 4 and 5 until all stages have been calculated.
7. Sum the stage horsepowers to obtain the total compressor power required.

Example 13-2 — Compress 2 MMscfd of gas measured at 14.65 psia and 60°F. Intake pressure is 100 psia, and intake temperature is 100°F. Discharge pressure is 900 psia. The gas has a specific gravity of 0.80 (23 MW). What is the required horsepower, assuming a high speed compressor?

1. Compression ratio is

   $$\frac{900 \text{ psia}}{100 \text{ psia}} = 9$$

   This would be a two-stage compressor; therefore, the ratio per stage is $\sqrt{9}$ or 3.
2. 100 psia x 3 = 300 psia (1st stage discharge pressure)

   300 psia = 295 psia (suction to 2nd stage)

   Where the 5 psi represents the pressure drop between first stage discharge and second stage suction.

   $$\frac{900 \text{ psia}}{295 \text{ psia}} = 3.05 \text{ (compression ratio for 2nd stage)}$$

   It may be desirable to recalculate the interstage pressure to balance the ratios. For this sample problem, however, the first ratios determined will be used.
3. From Fig. 13-8 a gas with specific gravity of 0.8 at 150°F would have an approximate k of 1.21. For most compression applications, the 150°F curve will be adequate. This should be checked after determining the average cylinder temperature.
4. Determine the discharge temperature for the first stage from Eq 13-18. For a compression ratio of 3, discharge temperature = approximately 220°F. Average cylinder temperature = 160°F.
5. In the same manner, discharge temperature for the second stage (with r = 3.05 and assuming interstage cooling to 120°F) equals approximately 244°F. Average cylinder temperature = 182°F.
6. From the physical properties section (Section 23), estimate the compressibility factors at suction and discharge pressure and temperature of each stage.

   1st stage: $Z_s = 0.98$
   $Z_d = 0.97$
   $Z_{avg} = 0.975$

   2nd stage: $Z_s = 0.94$
   $Z_d = 0.92$
   $Z_{avg} = 0.93$
7. Calculate the horsepower required for the first and second stages from Eq 13-21:

$$\text{BHP for 1st stage} = 3.03 \bullet (0.975) \bullet [2 \bullet 560/0.82] \bullet [1.21/(1.21\text{-}1)] \bullet \left(\frac{14.65}{520}\right) \bullet [(300/100)^{(1.21-1)/1.21} - 1] = 137.6$$

$$\text{BHP for 2nd stage} = 3.03 \bullet (0.93) \bullet [2 \bullet 580/0.82] \bullet [1.21/(1.21\text{-}1)] \bullet \left(\frac{14.65}{520}\right) \bullet [(900/295)^{(1.21-1)/1.21} - 1] = 138.2$$

Total BHP required = 137.6 + 138.2 = 275.8

Note that in Example 13-1 the same conditions result in a compression power of 285 Bhp which is close agreement.

Limits to compression ratio per stage — The maximum ratio of compression permissible in one stage is usually limited by the discharge temperature or by rod loading, particularly in the first stage.

When handling gases containing oxygen, which could support combustion, there is a possibility of fire and explosion because of the oil vapors present.

To reduce carbonization of the oil and the danger of fires, a safe operating limit may be considered to be approximately 300°F. Where no oxygen is present in the gas stream, temperatures of 350°F may be considered as the maximum, even though mechanical or process requirements usually dictate a lower figure.

Packing life may be significantly shortened by the dual requirement to seal both high pressure and high temperature gases. For this reason, at higher discharge pressures, a temperature closer to 250°F or 275°F may be the practical limit.

In summary, and for most field applications, the use of 300°F maximum would be a good average. Recognition of the above variables is, however, still useful.

Economic considerations are also involved because a high ratio of compression will mean a low volumetric efficiency and require a larger cylinder to produce the same capacity. For this reason a high rod loading may result and require a heavier and more expensive frame.

Where multi-stage operation is involved, equal ratios of compression per stage are used (plus an allowance for piping and cooler losses if necessary) unless otherwise required by process design. For two stages of compression the ratio per stage would approximately equal the square root of the total compression ratio; for three stages, the cube root, etc. In practice, especially in high-pressure work, decreasing the compression ratio in the higher stages to reduce excessive rod loading may prove to be advantageous.

Cylinder Design

Depending on the size of the machine and the number of stages, reciprocating compressors are furnished with cylinders fitted with either single- or double-acting pistons, see examples in Figs. 13-11 through 13-13.

FIG. 13-11

Low Pressure Cylinder with Double-Acting Piston

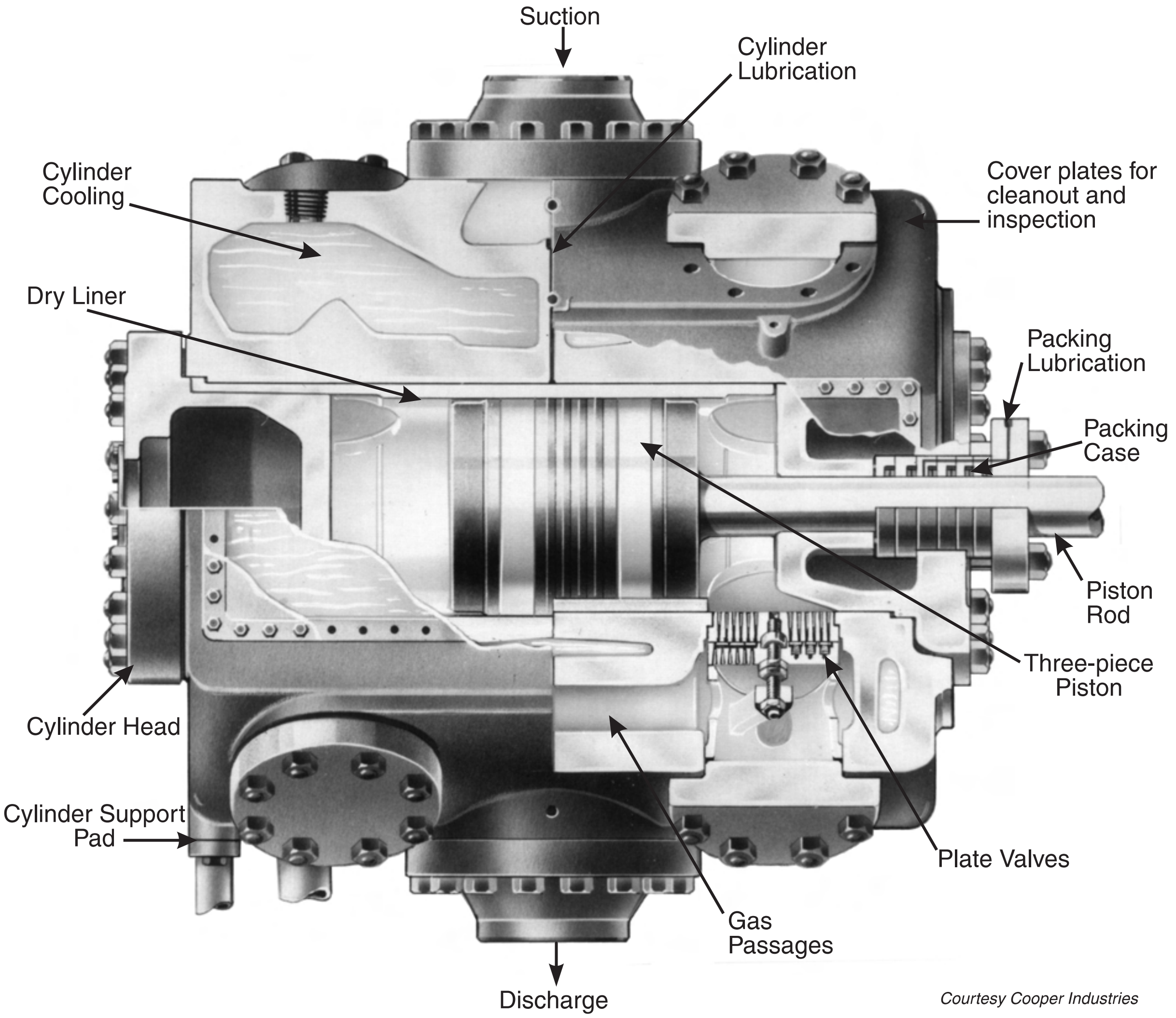

Courtesy Cooper Industries

In the same units, double-acting pistons are commonly used in the first stages and often single-acting in the higher stages of compression.

Cylinder materials are normally selected for strength; however, thermal shock, mechanical shock, or corrosion resistance may also be a determining factor. The table below shows discharge pressure limits generally used in the gas industry for cylinder material selection.

Cylinder Material	Discharge Pressure (psig)
Cast Iron	up to 1,200
Nodular Iron	about 1,500
Cast Steel	1,200 to 2,500
Forged Steel	above 2,500

API standard 618 recommends 1000 psig as the maximum pressure for both cast iron and nodular iron.

Cylinders are designed both as a solid body (no liner) and with liners. Cylinder liners are inserted into the cylinder body to either form or line the pressure wall. There are two types. The wet liner forms the pressure wall as well as the inside wall of the water jacket. The dry type lines the cylinder wall and is not required to add strength.

Standard cylinder liners are cast iron. If cylinders are required to have special corrosion or wear resistance, other materials or special alloys may be needed.

Most compressors use oils to lubricate the cylinder with a mechanical, force-feed lubricator having one or more feeds to each cylinder.

The non-lubricated compressor has found wide application where it is desirable or essential to compress air or gas without contaminating it with lubricating oil.

FIG. 13-12

High Pressure Cylinder with Double-Acting Piston and Tail-Rod

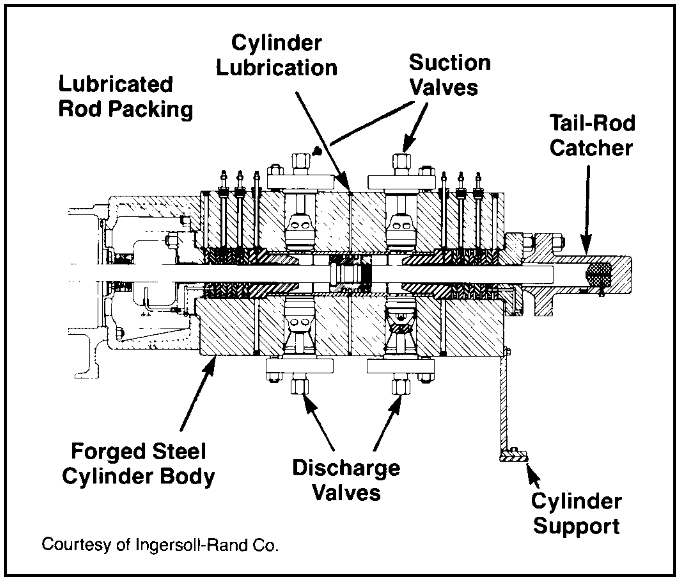

Courtesy of Ingersoll-Rand Co.

For such cases a number of manufacturers furnish a "non-lubricated" cylinder (Fig. 13-14). The piston on these cylinders is equipped with piston rings of graphitic carbon or plastic as well as pads or rings of the same material to maintain the proper clearance between the piston and cylinder. Plastic packing of a type that requires no lubricant is used on the stuffing box. Although oil-wiper rings are used on the piston rod where it leaves the compressor frame, minute quantities of oil might conceivably enter the cylinder on the rod. Where even such small amounts of oil are objectionable, an extended cylinder connecting piece can be furnished. This simply

FIG. 13-13

Single-Acting Plunger Cylinder Designed for 15,000 psig Discharge

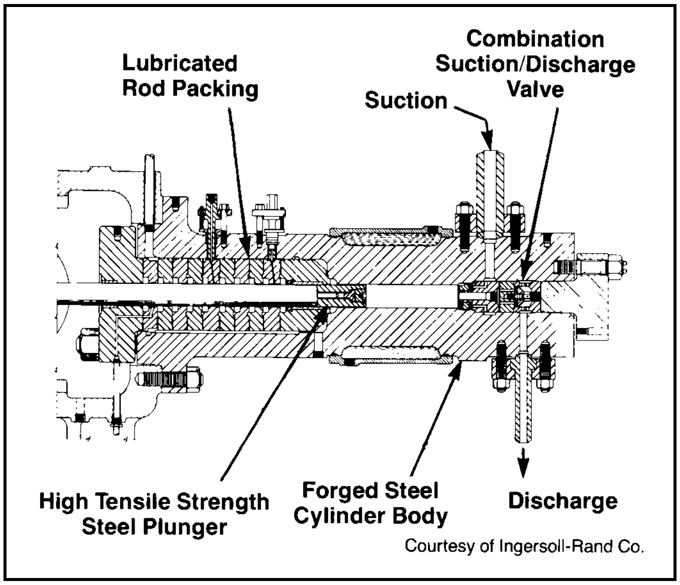

Courtesy of Ingersoll-Rand Co.

FIG. 13-14

Piston Equipped with Teflon® Piston and Wear Rings for a Single-Acting Non-Lubricated Cylinder

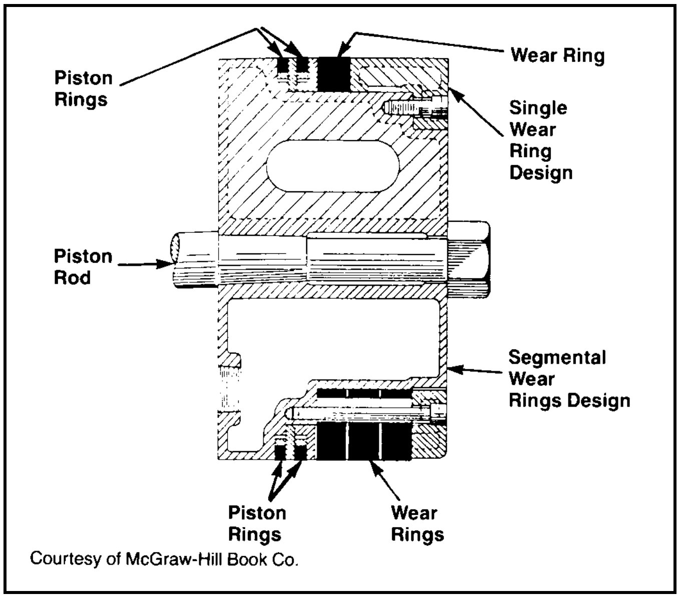

Courtesy of McGraw-Hill Book Co.

lengthens the piston rod so that no lubricated portion of the rod enters the cylinder.

A small amount of gas leaking through the packing can be objectionable. Special distance pieces are furnished between the cylinder and frame, which may be either single-compartment or double-compartment. These may be furnished gas tight and vented back to the suction, or may be filled with a sealing gas or fluid and held under a slight pressure, or simply vented.

Compressor valves for non-lubricated service operate in an environment that has no lubricant in the gas or in the cylinder. Therefore, the selection of valve materials is important to prevent excessive wear.

Piston rod packing universally used in non-lubricated compressors is of the full-floating mechanical type, consisting of a case containing pairs of either carbon or plastic (TFE) rings of conventional design.

When handling oxygen and other gases such as nitrogen and helium, it is absolutely necessary that all traces of hydrocarbons in cylinders be removed. With oxygen, this is required for safety, with other gases to prevent system contamination. Deoiling schemes are discussed in Refrigeration, Section 14.

High-pressure compressors with discharge pressures from 5,000 to 30,000 psi usually require special design and a complete knowledge of the characteristics of the gas.

As a rule, inlet and discharge gas pipe connections on the cylinder are fitted with flanges of the same rating for the following reasons:

- Practicality and uniformity of casting and machinery,
- Hydrostatic test, usually at 150% design pressure,
- Suction pulsation bottles are usually designed for the same pressure as the discharge bottle (often federal, state, or local government regulation).

Reciprocating Compressor Control Devices

Output of compressors must be controlled (regulated) to match system demand.

In many installations some means of controlling the output of the compressor is necessary. Often constant flow is required despite variations in discharge pressure, and the control device must operate to maintain a constant compressor capacity. Compressor capacity, speed, or pressure may be varied in accordance with the requirements. The nature of the control device will depend on the regulating variable — whether pressure, flow, temperature, or some other variable — and on type of compressor driver.

Unloading for Starting — Practically all reciprocating compressors must be unloaded to some degree before starting so that the driver torque available during acceleration is not exceeded. Both manual and automatic compressor startup unloading is used. Common methods of unloading include: discharge venting, discharge to suction bypass, and holding open the inlet valves using valve lifters.

Capacity Control — The most common requirement is regulation of capacity. Many capacity controls, or unloading devices, as they are usually termed, are actuated by the pressure on the discharge side of the compressor. A falling pressure indicates that gas is being used faster than it is being compressed and that more gas is required. A rising pressure indicates that more gas is being compressed than is being used and that less gas is required.

A common method of controlling the capacity of a compressor is to vary the speed. This method is applicable to steam-driven compressors and to units driven by internal combustion engines. In these cases the regulator actuates the steam-admission or fuel-admission valve on the compressor driver to control the speed.

Electric motor-driven compressors usually operate at constant speed, although variable speed drives are becoming increasingly more common. For constant speed motors other methods of controlling the capacity are necessary. On reciprocating compressors up to about 100 hp, two types of control are usually available. These are automatic-start-and-stop control and constant-speed control.

Automatic-start-and-stop control, as its name implies, stops or starts the compressor by means of a pressure-actuated switch as the gas demand varies. It should be used only when the demand for gas will be intermittent.

Constant-speed control permits the compressor to operate at full speed continuously, loaded part of the time and fully or partially unloaded at other times. Two methods of unloading the compressor with this type of control are in common use: inlet-valve unloaders, and clearance unloaders. Inlet-valve unloaders (Fig. 13-15) operate to hold the compressor inlet valves open and thereby prevent compression. Clearance unloaders (Fig. 13-16) consist of pockets or small reservoirs which are opened when unloading is desired. The gas is compressed into them on the compression stroke and expands into the cylinder on the return stroke, reducing the intake of additional gas.

Motor-driven reciprocating compressors above 100 hp in size are usually equipped with a step control. This is in reality a variation of constant-speed control in which unloading is accomplished in a series of steps, varying from full load down to no load.

Five-step control (full load, three-quarter load, one-half load, one-quarter load, and no load) is accomplished by means of clearance pockets. On some makes of machines inlet-valve and clearance control unloading are used in combination.

FIG. 13-15

Inlet Valve Unloader

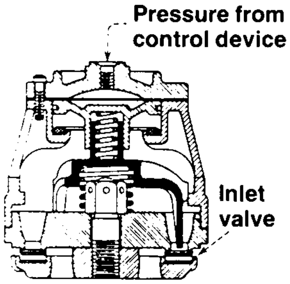

Courtesy of McGraw-Hill Book Co.

A common practice in the natural gas industry is to prepare a single set of curves for a given machine unless there are side loads or it is a multi-service machine.

Fig. 13-17 shows indicator cards which demonstrate the unloading operation for a double acting cylinder at three capacity points. The letters adjacent to the low-pressure diagrams represent the unloading influence of the respective and cumulative effect of the various pockets as identified in Fig. 13-21. Full load, one-half, and no load capacity is obtained by holding corresponding suction valves open or adding sufficient clearance to produce a zero volumetric efficiency. No-capacity operation includes holding all suction valves open.

FIG. 13-16

Pneumatic Valves Controlling Four Fixed Pockets in Compressor for Five-Step Control

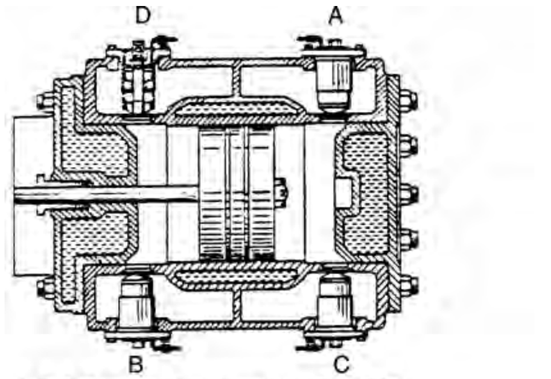

A, B, C, D are pockets referred to in Fig. 13-17

Courtesy McGraw-Hill Book Co.

FIG. 13-17

Indicator Diagram for Three Load Points of Operation

A, B, C, D refer to clearance pockets as shown in Fig. 13-16

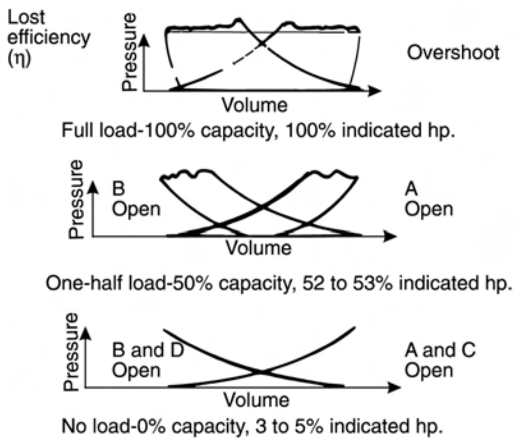

Courtesy McGraw-Hill Book Co.

Fig. 13-18 shows an alternative representation of compressor unloading operation with a step-control using fixed volume clearance pockets. The curve illustrates the relationship between compressor capacity and driver capacity for a varying compressor suction pressure at a constant discharge pressure and constant speed. The driver can be a gas engine or electric motor.

The purpose of this curve is to determine what steps of unloading are required to prevent the driver and piston rods from serious overloading. All lines are plotted for a single stage compressor.

The driver capacity line indicates the maximum allowable capacity for a given horsepower. The cylinder capacity lines represent the range of pressures calculated with all possible combinations of pockets open and cylinder unloading, as necessary, to cover the capacity of the driver.

Starting at the end (line 0-0) with full cylinder capacity, the line is traced until it crosses the driver capacity line at which point it is dropped to the next largest cylinder capacity and follow until it crosses the driver line, etc. This will produce a “saw tooth” effect, hence the name “saw tooth” curve. The number of “teeth” depends upon the number of combinations of pockets (opened or closed) required for unloading.

The same method is followed for multi-stage units. For each additional stage another “saw tooth” curve must be constructed, i.e., for a two stage application, two curves are required to attain the final results.

Although control devices are often automatically operated, manual operation is satisfactory for many services. Where manual operation is provided, it often consists of a valve, or valves, to open and close clearance pockets. In some cases, a movable cylinder head is provided for variable clearance in the cylinder (Fig. 13-19).

FIG. 13-18

“Saw Tooth” Curve for Unloading Operation

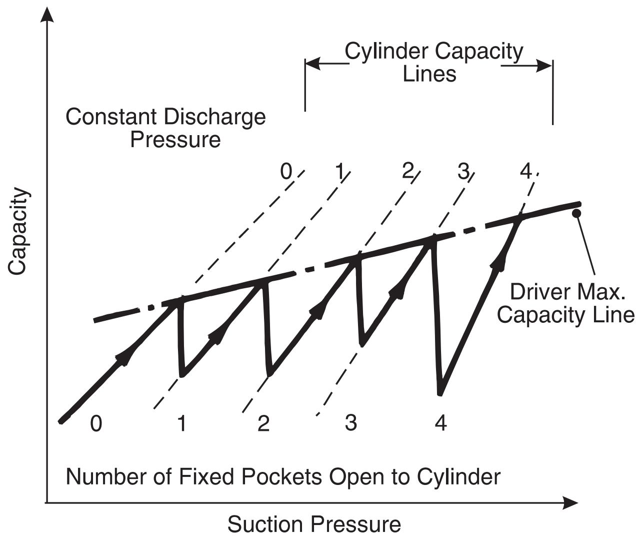

Gas Pulsation Control

Pulsation is inherent in reciprocating compressors because suction and discharge valves are open during only part of the stroke.

Pulsation must be damped (controlled) in order to:

a. provide smooth flow of gas to and from the compressor,

b. prevent overloading or underloading of the compressors, and

c. reduce overall vibration.

There are several types of pulsation chambers. The simplest one is a volume bottle, or a surge drum, which is a pressure vessel, unbaffled internally and mounted on or very near a cylinder inlet or outlet.

A manifold joining the inlet and discharge connections of cylinders operating in parallel can also serve as a volume bottle.

Performance of volume bottles is not normally guaranteed without an analysis of the piping system from the compressor to the first process vessel.

Volume bottles are sized empirically to provide an adequate volume to absorb most of the pulsation. Several industry methods were tried in an effort to produce a reasonable rule-of-thumb for their sizing. Fig. 13-20 may be used for approximate bottle sizing.

Example 13-3

Indicated suction pressure = 600 psia

Indicated discharge pressure = 1400 psia

Cylinder bore = 6 in

Cylinder stroke = 15 in

Swept volume = $\pi (6^2/4)(15) = 424$ cu in

From Fig. 13-25:

At 600 psi inlet pressure, the suction bottle multiplier is approximately 7.5. Suction-bottle volume = (7.5) (424) = 3,180 cu in.

NOTE: When more than one cylinder is connected to a bottle, the sum of the individual swept volumes is the size required for the common bottle.

FIG. 13-19

Sectional View of a Cylinder Equipped with a Hand-Operated Valve Lifter and Variable-Volume Clearance

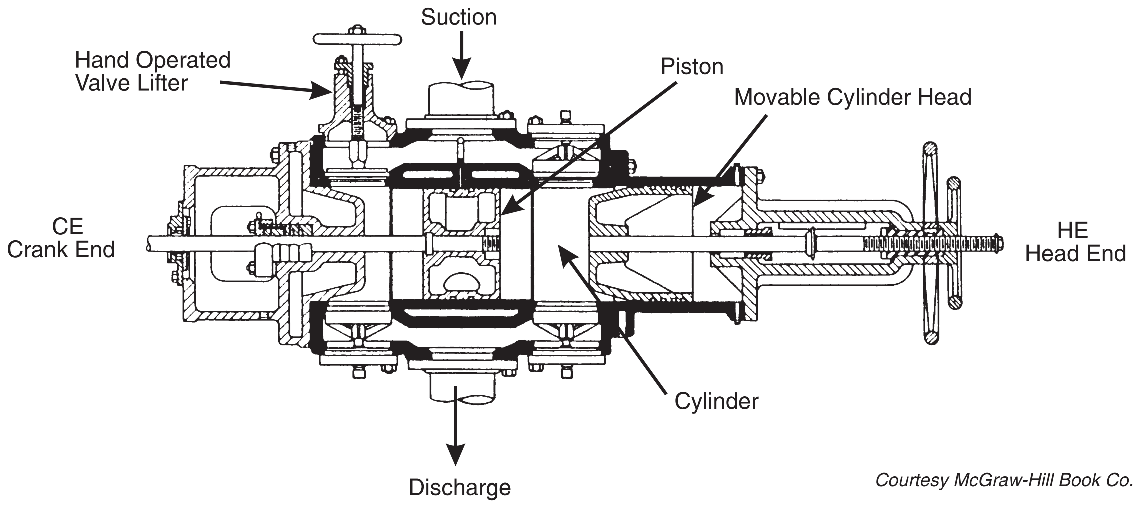

Courtesy McGraw-Hill Book Co.

FIG. 13-20

Approximate Bottle Sizing Chart

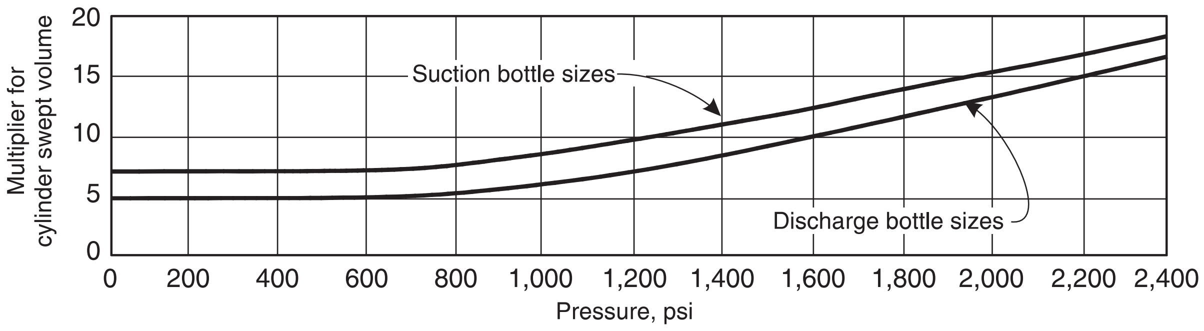

For more accurate sizing, compressor manufacturers can be consulted. Organizations which provide designs and/or equipment for gas-pulsation control are also available.

Having determined the necessary volume of the bottle, the proportioning of diameter and length to provide this volume requires some ingenuity and judgment. It is desirable that manifolds be as short and of as large diameter as is consistent with pressure conditions, space limitations, and appearance.

A good general rule is to make the manifold diameter 1-1/2 times the inside diameter of the largest cylinder connected to it, but this is not always practicable, particularly where large cylinders are involved.

Inside diameter of pipe must be used in figuring manifolds. This is particularly important in high-pressure work and in small sizes where wall thickness may be a considerable percentage of the cross sectional area. Minimum manifold length is determined from cylinder center distances and connecting pipe diameters. Some additions must be made to the minimum thus determined to allow for saddle reinforcements and for welding of caps.

It is customary to close the ends of manifolds with welding caps which add both volume and length. Fig. 13-21 gives approximate volume and length of standard caps.

Pulsation Dampeners (Snubbers)

A pulsation dampener is an internally-baffled device. The design of the pulsation dampening equipment is based on acoustical analog evaluation which takes into account the specified operating speed range, conditions of unloading, and variations in gas composition.

Analog evaluation is accomplished with an active analog that simulates the entire compressor, pulsation dampeners, piping and equipment system and considers dynamic interactions among these elements.

Pulsation dampeners also should be mounted as close as possible to the cylinder, and in large volume units, nozzles should be located near the center of the chamber to reduce unbalanced forces.

Pulsation dampeners are typically guaranteed for a maximum residual peak-to-peak pulsation pressure of 2% of average absolute pressure at the point of connection to the piping system, and pressure drop through the equipment of not more than 1% of the absolute pressure. This applies at design condition and not necessarily for other operating pressures and flows. A detailed discussion of recommended design approaches for pulsation suppression devices is presented in API Standard 618, Reciprocating Compressors for General Refinery Services.

As pressure vessels, all pulsation chambers (volume bottles and dampeners) are generally built to Section VIII of ASME Code and suitable for applicable cylinder relief valve set pressure.

Suction pulsation chambers are often designed for the same pressure as the discharge units, or for a minimum of 2/3 of the design discharge pressure.

Troubleshooting

Minor troubles can normally be expected at various times during routine operation of the compressor. These troubles are most often traced to dirt, liquid, and maladjustment, or to operating personnel being unfamiliar with functions of the various machine parts and systems. Difficulties of this type can usually be corrected by cleaning, proper adjustment, elimination of an adverse condition, or quick replacement of a relatively minor part.

Major trouble can usually be traced to long periods of operation with unsuitable coolant or lubrication, careless operation and routine maintenance, or the use of the machine on a service for which it was not intended.

A defective inlet valve can generally be found by feeling the valve cover. It will be much warmer than normal. Discharge valve leakage is not as easy to detect since the discharge is always hot. Experienced operators of water-cooled units can usually tell by feel if a particular valve is leaking. The best indication of discharge valve trouble is the discharge temperature. This will rise, sometimes rapidly, when a valve is in poor condition or breaks. This is one very good reason for keeping a record of the discharge temperature from each cylinder.

FIG. 13-21

Welding Caps

Pipe size	Standard weight		Extra strong		Double Extra strong	
	Volume, cu in.	Length, in.	Volume, cu in.	Length, in.	Volume, cu in.	Length, in.
4"	24.2	2 1/2	20.0	2 1/2	15	3
6"	77.3	3 1/2	65.7	3 1/2	48	4
8"	148.5	4 11/16	122.3	4 11/16	120	5
10"	295.6	5 3/4	264.4	5 3/4		
12"	517.0	6 7/8	475.0	6 7/8		
14"	684.6	7 13/16	640.0	7 13/16		
16"	967.6	9	911.0	9		
18"	1432.6	10 1/16	1363.0	10 1/16		
20"	2026.4	11 1/4	1938.0	11 1/4		
24"	3451.0	13 7/16	3313.0	13 7/16		

Recording of the interstage pressure on multistage units is valuable because any variation, when operating at a given load point, indicates trouble in one or the other of the two stages. If the pressure drops, the trouble is in the low pressure cylinder. If it rises, the problem is in the high pressure cylinder.

Troubleshooting is largely a matter of elimination based on a thorough knowledge of the interrelated functions of the various parts and the effects of adverse conditions. A complete list of possible troubles with their causes and corrections is impractical, but the following list of the more frequently encountered troubles and their causes is offered as a guide (Fig. 13-22).

CENTRIFUGAL COMPRESSORS

This section is intended to supply information sufficiently accurate to determine whether a centrifugal compressor should be considered for a specific job. The secondary objective is to present information for evaluating compressor performance.

Fig. 13-23 gives an approximate idea of the flow range that a centrifugal compressor will handle. A multi-wheel (multistage) centrifugal compressor is normally considered for inlet volumes between 500 and 200,000 inlet acfm. A single-wheel (single stage) compressor would normally have application between 100 and 150,000 inlet acfm. A multiwheel compressor can be thought of as a series of single wheel compressors contained in a single casing.

Most centrifugal compressors operate at speeds of 3,000 rpm or higher, a limiting factor being impeller stress considerations as well as velocity limitation of 0.8 to 0.85 Mach number at the impeller tip and eye. Recent advances in machine design have resulted in production of some units running at speeds in excess of 40,000 rpm.

Figs. 13-24 through 13-26 provide cross-sectional drawings and identification of major components for typical centrifugal compressors.

Centrifugal compressors are usually driven by electric motors, steam or gas turbines (with or without speed-increasing gears), or turboexpanders.

There is an overlap of centrifugal and reciprocating compressors on the low end of the flow range, see Fig. 13-3. On the higher end of the flow range an overlap with the axial compressor exists. The extent of this overlap depends on a number of things. Before a technical decision could be reached as to the type of compressor that would be installed, the service, operational requirements, and economics would have to be considered.

Design requirements for centrifugal compressors are covered by API Standard 617.

Performance Calculations

The operating characteristics must be determined before an evaluation of compressor suitability for the application can be made. Fig. 13-27 gives a rough comparison of the characteristics of the axial, centrifugal, and reciprocating compressor.

The centrifugal compressor approximates the constant head-variable volume machine, while the reciprocating is a constant volume-variable head machine. The axial compressor, which is a low head, high flow machine, falls somewhere in between. A compressor is a part of the system, and its performance is dictated by the system resistance. The desired system capability or objective must be determined before a compressor can be selected.

Fig. 13-28 is a typical performance map which shows the basic shape of performance curves for a variable-speed centrifugal compressor. The curves are affected by many variables, such as desired compression ratio, type of gas, number of wheels, sizing of compressor, etc.

With variable speed, the centrifugal compressor can deliver constant capacity at variable pressure, variable capacity at constant pressure, or a combination variable capacity and variable pressure.

Basically the performance of the centrifugal compressor, at speeds other than design, is such that the capacity will vary directly as the speed, the head developed as the square of the speed, and the required horsepower as the cube of the speed. As the speed deviates from the design speed, the error of these rules, known as the affinity laws, or fan laws, increases. The fan laws only apply to single stages or multi-stages with very low compression ratios or very low Mach numbers.

Fan Laws:

$$Q \propto N;\ \text{i.e.,}\ \frac{Q_{110}}{N_{110}} = \frac{Q_{100}}{N_{100}} = \frac{Q_{90}}{N_{90}} \qquad \textbf{Eq 13-22}$$

$$H \propto N^2;\ \text{i.e.,}\ \frac{H_{110}}{(N_{110})^2} = \frac{H_{100}}{(N_{100})^2} = \frac{H_{90}}{(N_{90})^2} \qquad \textbf{Eq 13-23}$$

$$Bhp \propto N^3;\ \text{i.e.,}\ \frac{Bhp_{110}}{(N_{110})^3} = \frac{Bhp_{100}}{(N_{100})^3} = \frac{Bhp_{90}}{(N_{90})^3} \qquad \textbf{Eq 13-24}$$

By varying speed, the centrifugal compressor will meet any load and pressure condition demanded by the process system within the operating limits of the compressor and the driver. It normally accomplishes this as efficiently as possible, since only the head required by the process is developed by the compressor. This compares to the essentially constant head developed by the constant speed compressor.

Fig. 13-28 depicts typical performance curves with a small compression ratio. The system resistance has been superimposed on the chart: Line A represents typical system resistance of a closed system, such as a refrigeration unit where there is a relatively constant discharge pressure. Line B is an open-end system, such as pipeline application where pressure increases with capacity.

Fig. 13-29 shows a higher compression ratio. The range of stable operation is reduced because of the larger compression ratio. This is indicated by the surge line in Fig. 13-29 being further to the right than in Fig. 13-28.

Estimating Performance

Figs. 13-30 through 13-37 may be used for estimating compressor performance. These curves are suitable for estimating only and are not intended to take the place of a “wheel-by-wheel” selection by the compressor manufacturer, nor should the curves be used to calculate performance using field data in an attempt to determine a variance from predicted performance based on manufacturer’s data. Fig. 13-30 is used to convert scfm to icfm. All centrifugal compressors are based on flows that are converted to inlet or actual cubic feet per minute. This is done because the centrifugal wheel is sensitive to inlet volume, compression ratio (i.e., head), and specific speed.

FIG. 13-22

Probable Causes of Reciprocating Compressor Trouble

Trouble	Probable Cause(s)
Compressor Will not Start	1. Power supply failure. 2. Switchgear or starting panel. 3. Low oil pressure shut down switch. 4. Control panel.
Motor Will Not Synchronize	1. Low voltage. 2. Excessive starting torque. 3. Incorrect power factor. 4. Excitation voltage failure.
Low Oil Pressure	1. Oil pump failure. 2. Oil foaming from counterweights striking oil surface. 3. Cold oil. 4. Dirty oil filter. 5. Interior frame oil leaks. 6. Excessive leakage at bearing shim tabs and/or bearings. 7. Improper low oil pressure switch setting. 8. Low gear oil pump by-pass/relief valve setting. 9. Defective pressure gauge. 10. Plugged oil sump strainer. 11. Defective oil relief valve.
Noise In Cylinder	1. Loose piston. 2. Piston hitting outer head or frame end of cylinder. 3. Loose crosshead lock nut. 4. Broken or leaking valve(s). 5. Worn or broken piston rings or expanders. 6. Valve improperly seated/damaged seat gasket. 7. Free air unloader plunger chattering.
Excessive Packing Leakage	1. Worn packing rings. 2. Improper lube oil and/or insufficient lube rate (blue rings). 3. Dirt in packing. 4. Excessive rate of pressure increase. 5. Packing rings assembled incorrectly. 6. Improper ring side or end gap clearance. 7. Plugged packing vent system. 8. Scored piston rod. 9. Excessive piston rod run-out.

Trouble	Probable Cause(s)
Packing Over-Heating	1. Lubrication failure. 2. Improper lube oil and/or insufficient lube rate. 3. Insufficient cooling.
Excessive Carbon On Valves	1. Excessive lube oil. 2. Improper lube oil (too light, high carbon residue). 3. Oil carryover from inlet system or previous stage. 4. Broken or leaking valves causing high temperature. 5. Excessive temperature due to high pressure ratio across cylinders.
Relief Valve Popping	1. Faulty relief valve. 2. Leaking suction valves or rings on next higher stage. 3. Obstruction (foreign material, rags), blind or valve closed in discharge line.
High Discharge Temperature	1. Excessive ratio on cylinder due to leaking inlet valves or rings on next higher stage. 2. Fouled intercooler/piping. 3. Leaking discharge valves or piston rings. 4. High inlet temperature. 5. Fouled water jackets on cylinder. 6. Improper lube oil and/or lube rate.
Frame Knocks	1. Loose crosshead pin, pin caps or crosshead shoes. 2. Loose/worn main, crankpin or crosshead bearings. 3. Low oil pressure. 4. Cold oil. 5. Incorrect oil. 6. Knock is actually from cylinder end.
Crankshaft Oil Seal Leaks	1. Faulty seal installation. 2. Clogged drain hole.
Piston Rod Oil Scraper Leaks	1. Worn scraper rings. 2. Scrapers incorrectly assembled. 3. Worn/scored rod. 4. Improper fit of rings to rod/side clearance.

Courtesy of Ingersoll-Rand Co.

FIG. 13-23

Centrifugal Compressor Flow Range

Nominal flow range (inlet acfm)	Average polytropic efficiency	Average isentropic efficiency	Speed to develop 10,000 ft head/wheel
100- 500	0.70	0.67	20,500
500- 7,500	0.80	0.78	10,500
7,500- 20,000	0.86	0.83	8,200
20,000- 33,000	0.86	0.83	6,500
33,000- 55,000	0.86	0.83	4,900
55,000- 80,000	0.86	0.83	4,300
80,000-115,000	0.86	0.83	3,600
115,000-145,000	0.86	0.83	2,800
145,000-200,000	0.86	0.83	2,500

Fig. 13-31 is a useful curve to find inlet (actual) cfm when the weight flow in lb/min is known. Actual cfm and inlet cfm both denote the gas at suction conditions. These terms are often used interchangeably. This curve can be used in reverse to determine mass flow.

Fig. 13-32 is used to determine the approximate discharge temperature that is produced by the compression ratio. Discharge temperatures above the 400°F range should be checked since mechanical problems as well as safety problems may exist. This curve includes compressor efficiencies in the range of 60 to 75%.

Example 13-4 — Given: $r = 10.0$; $Q_1 = 10{,}000$ icfm

$k = 1.15$; $t_1 = 0°C$

Find: Discharge temperature

Answer: $t_2 = 230°F$ (approximately) from Fig. 13-32.

Fig. 13-34 gives the approximate horsepower required for the compression. It includes compressor efficiencies in the range of 60 to 70%.

FIG. 13-24

Typical Centrifugal Compressor Showing Nomenclature of Key Parts

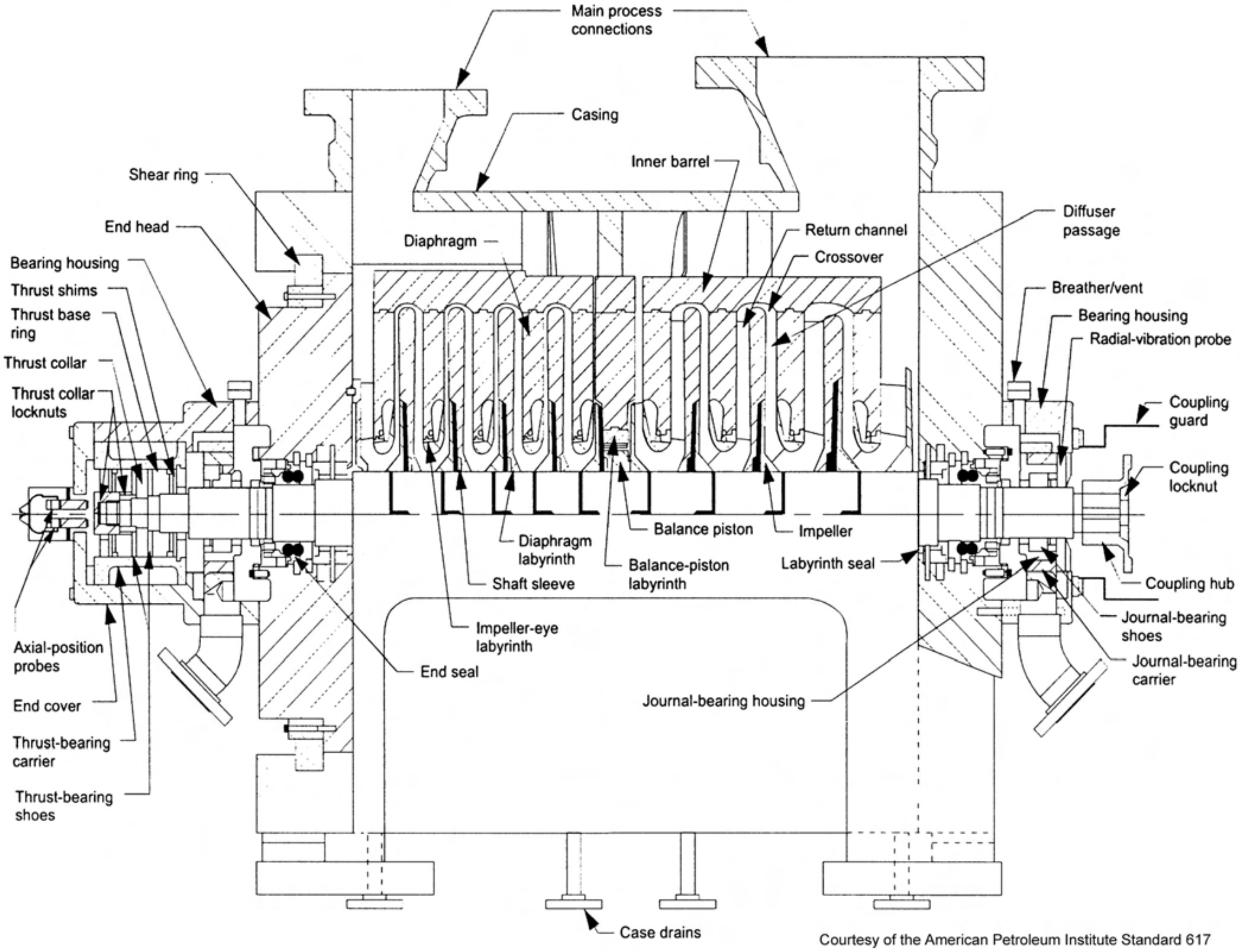

Courtesy of the American Petroleum Institute Standard 617

Example 13-5 — Given: Weight flow, w, = 1,000 lb/min

head = 70 000 ft-lb/lb

Find: Horsepower

Answer: Ghp = 3,000 from Fig. 13-34.

Fig. 13-37 predicts the approximate number of compressor wheels required to produce the head. If the number of wheels is not a whole number, use the next highest number.

Calculating Performance

When more accurate information is required for compressor head, gas horsepower, and discharge temperature, the equations in this section should be used. This method applies to a gas mixture for which a P-H diagram chart is not available. To calculate the properties of the gas, see Figs. 13-6 and 13-7. All values for pressure and temperature in these calculation procedures are the absolute values. Unless otherwise specified, volumes of flow in this section are actual volumes.

To calculate the inlet volume:

$$Q = \frac{(w)\,(1{,}545)\,(T_1)\,(Z_1)}{(MW)\,(P_1)\,(144)} \qquad \textbf{Eq 13-25}$$

If we assume the compression to be isentropic (reversible adiabatic, constant entropy), then:

$$H_{is} = \frac{ZRT}{MW\,(k-1)/k}\left[\left(\frac{P_2}{P_1}\right)^{(k-1)/k} - 1\right] \qquad \textbf{Eq 13-26}$$

Since these calculations will not be wheel-by-wheel, the head will be calculated across the entire machine. For this, use the average compressibility factor:

$$Z_{avg} = \frac{Z_1 + Z_2}{2}$$

The heat capacity ratio, k, is normally determined at the average suction and discharge temperature (see Figs. 13-7 and 13-8).

FIG. 13-25

Typical Centrifugal Compressor Cutaway

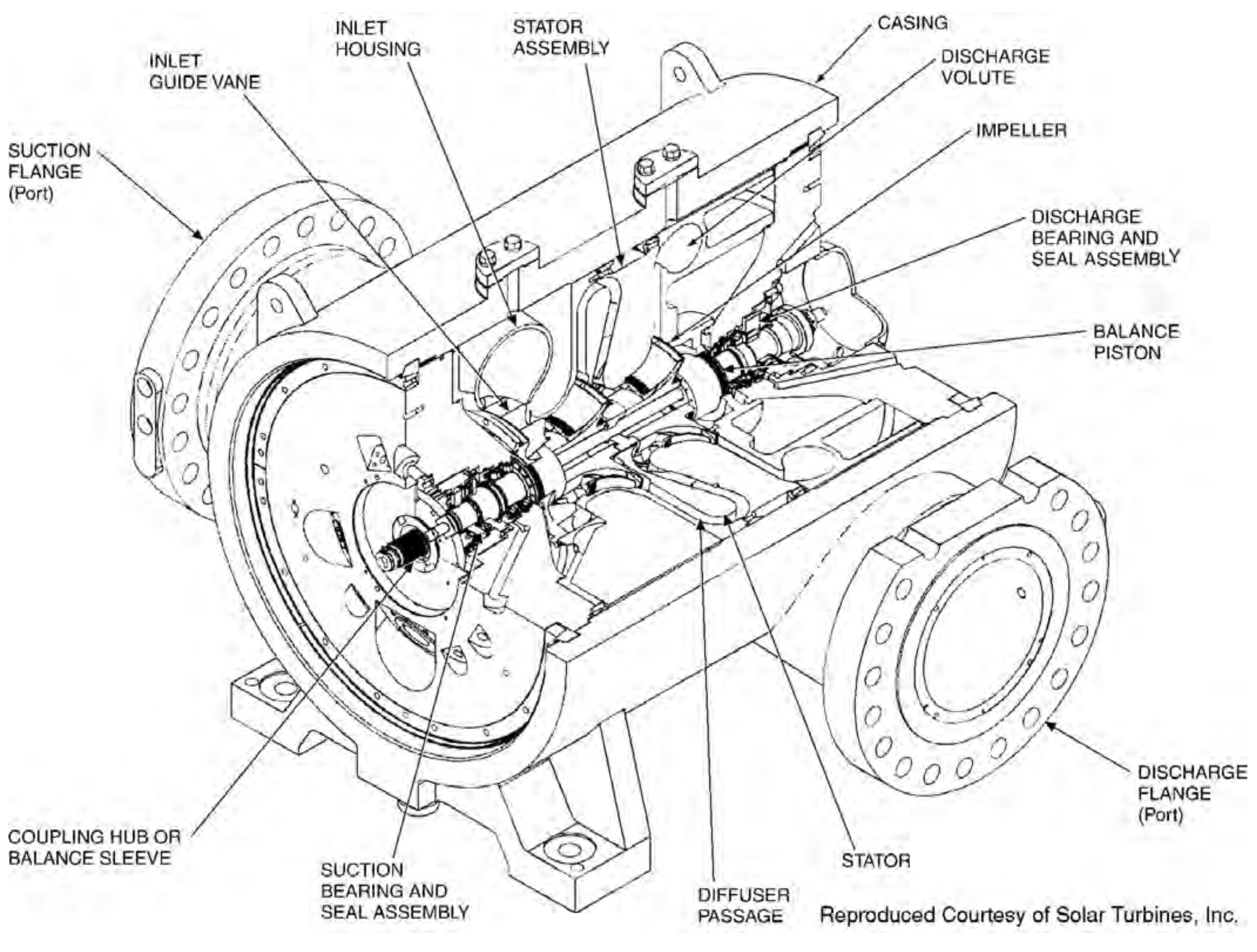

Reproduced Courtesy of Solar Turbines, Inc.

FIG. 13-26

Centrifugal Compressor Cross Section

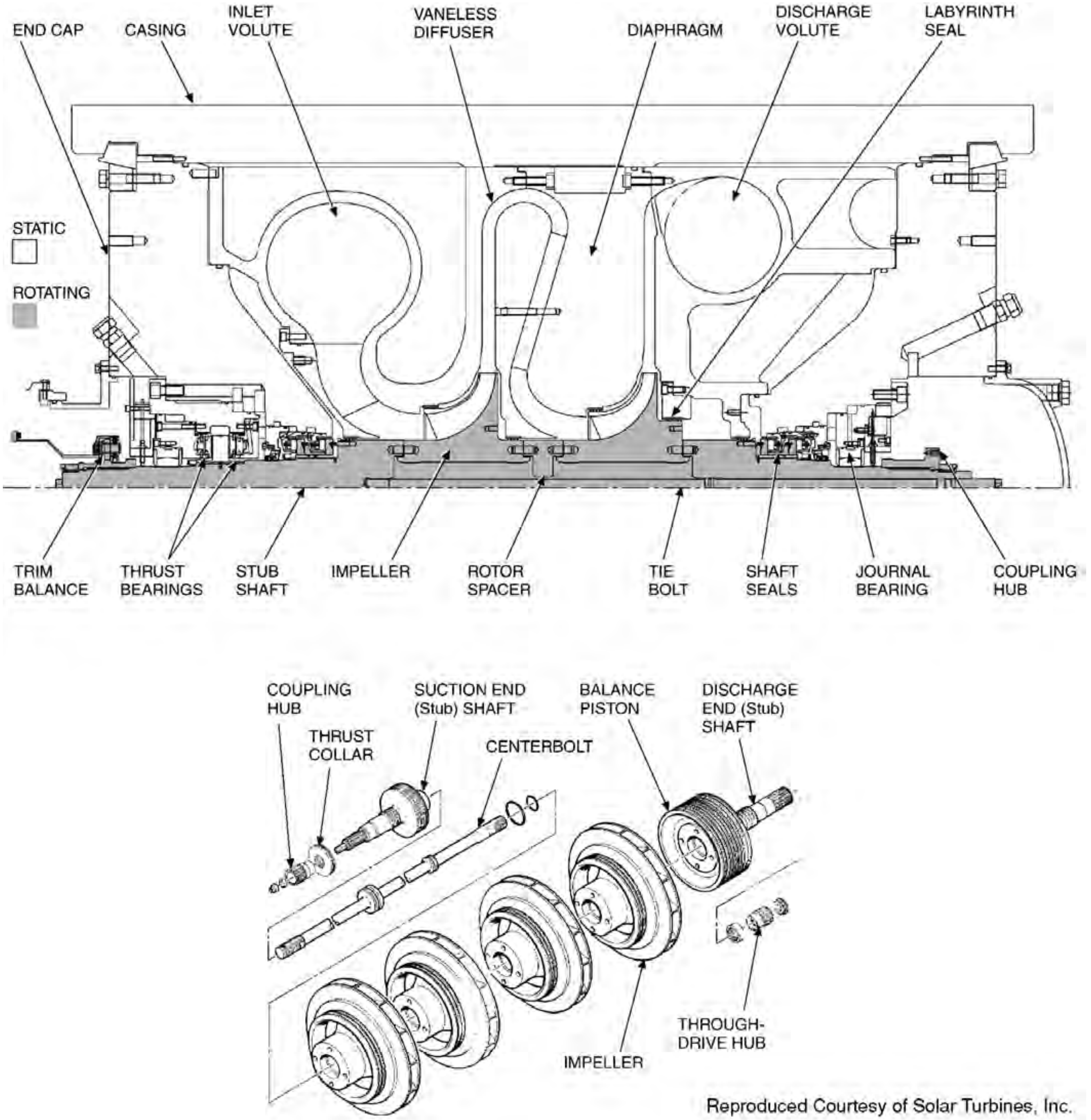

Reproduced Courtesy of Solar Turbines, Inc.

FIG. 13-27

Compressor Head

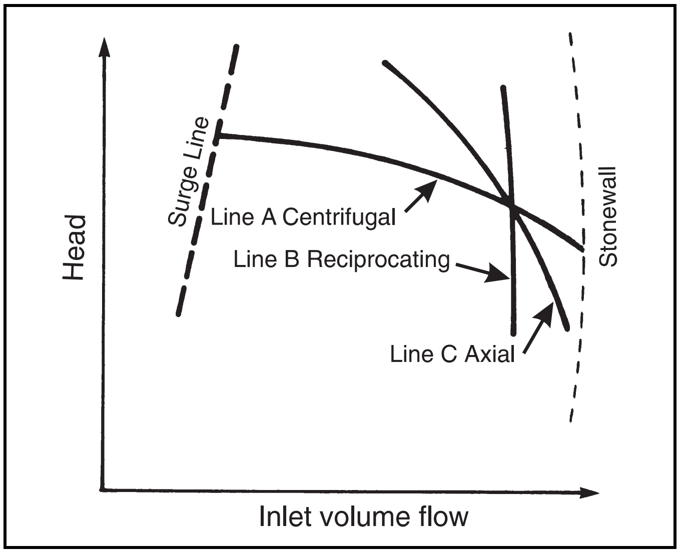

Isentropic Calculation

To calculate the head:

$$H_{is} = \frac{Z_{avg} R T_1}{MW\,(k-1)/k}\left[\left(\frac{P_2}{P_1}\right)^{(k-1)/k} - 1\right] \tag{Eq 13-27a}$$

which can also be written in the form:

$$H_{is} = \frac{1545}{MW}\,\frac{Z_{avg} T_1}{(k-1)/k}\left[\left(\frac{P_2}{P_1}\right)^{(k-1)/k} - 1\right] \tag{Eq 13-27b}$$

The gas horsepower can now be calculated from:

$$Ghp = \frac{(w)\,(H_{is})}{(\eta_{is})\,(33{,}000)} \tag{Eq 13-28}$$

The approximate theoretical discharge temperature can be calculated from:

$$\Delta T_{ideal} = T_1\left[\left(\frac{P_2}{P_1}\right)^{(k-1)/k} - 1\right] \tag{Eq 13-29}$$

$$T_2 = T_1 + \Delta T_{ideal} \tag{Eq 13-30}$$

FIG. 13-28

Compressor Performance, Low Compression Ratio

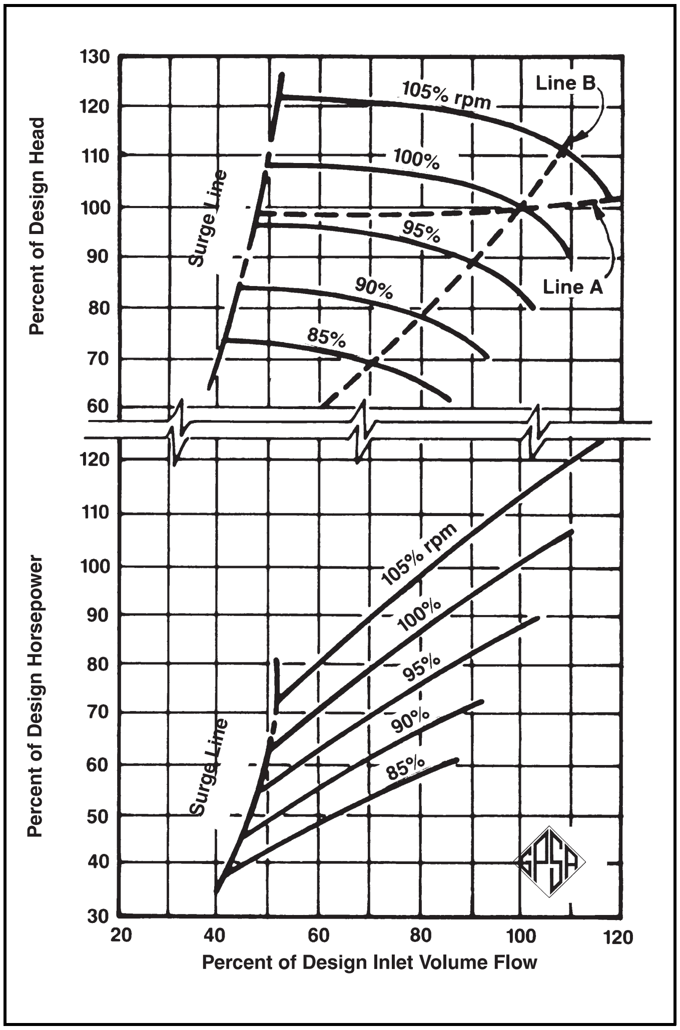

FIG. 13-29

Compressor Performance, Higher Compression Ratio

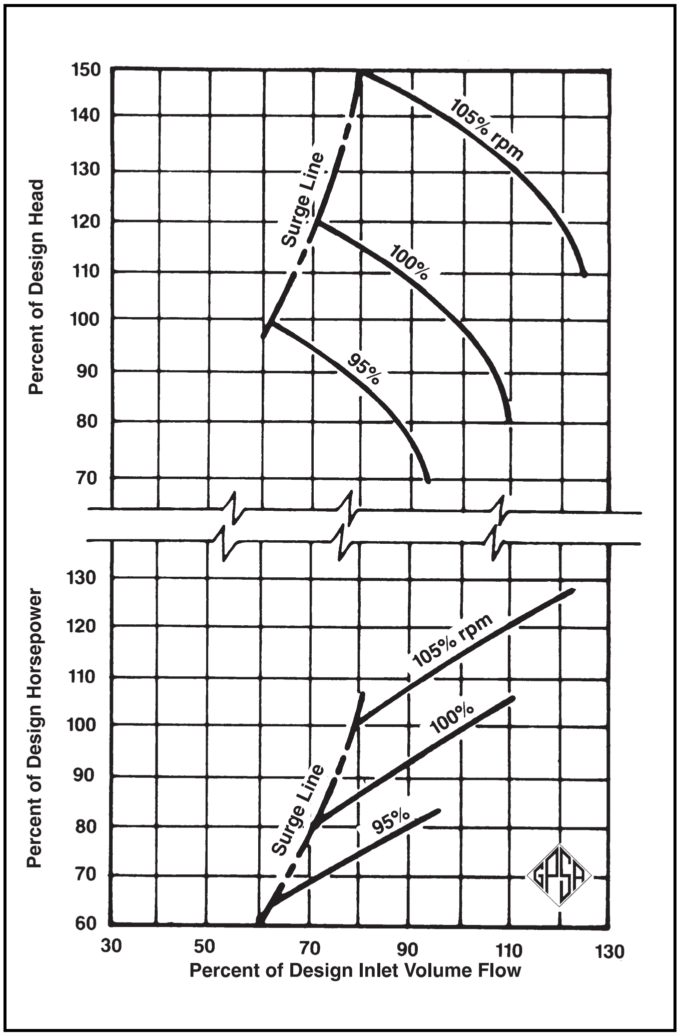

FIG. 13-30

ICFM to SCFM

Z = 1

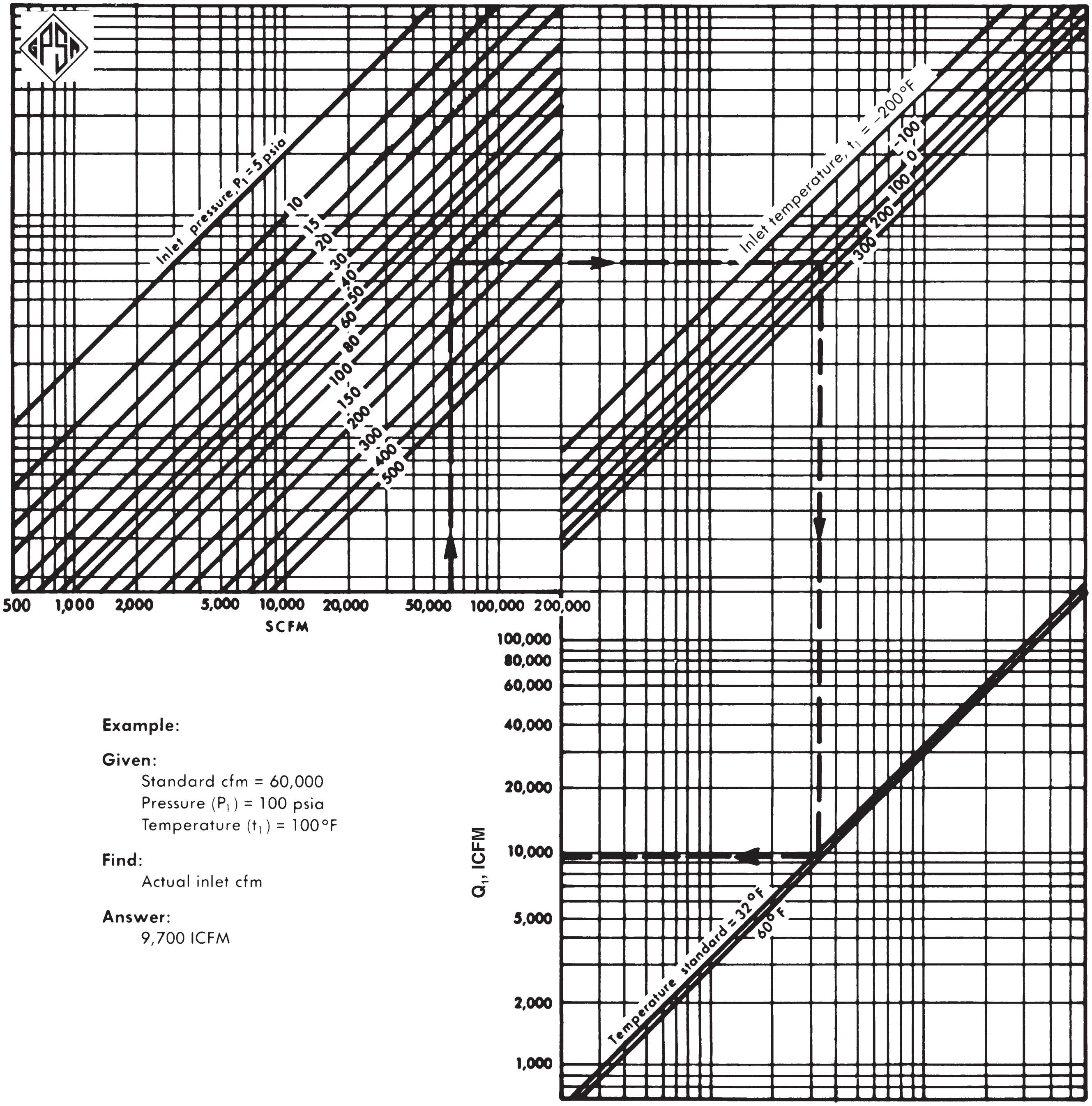

Example:

Given:

Standard cfm = 60,000
Pressure (P_1) = 100 psia
Temperature (t_1) = 100°F

Find:

Actual inlet cfm

Answer:

9,700 ICFM

FIG. 13-31

Mass Flow to Inlet Volume Flow

Z = 1

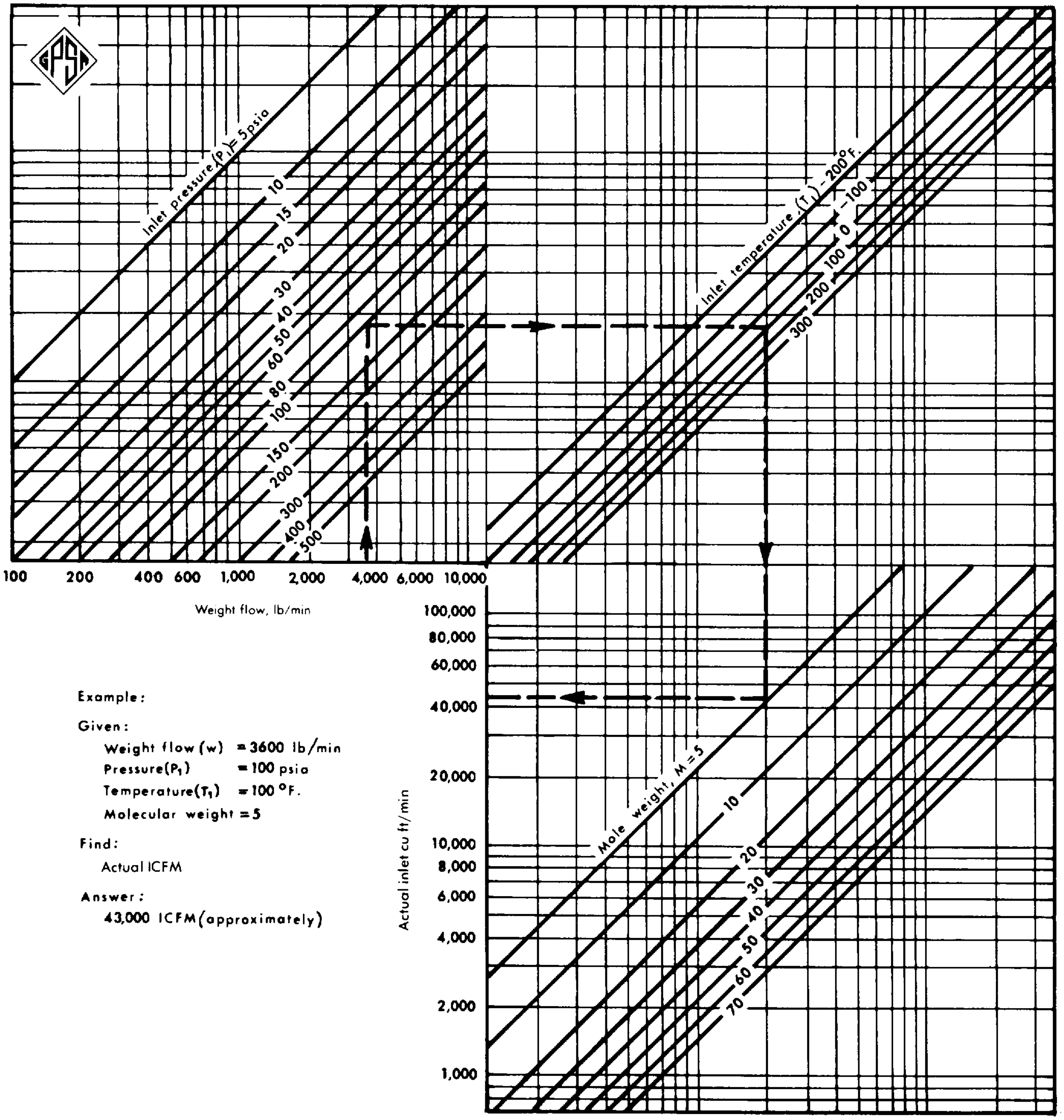

Example:

Given:

Weight flow (w) = 3600 lb/min
Pressure(P_1) = 100 psia
Temperature(T_1) = 100 °F.
Molecular weight = 5

Find:

Actual ICFM

Answer:

43,000 ICFM (approximately)

FIG. 13-32

Discharge Temperature
Z = 1

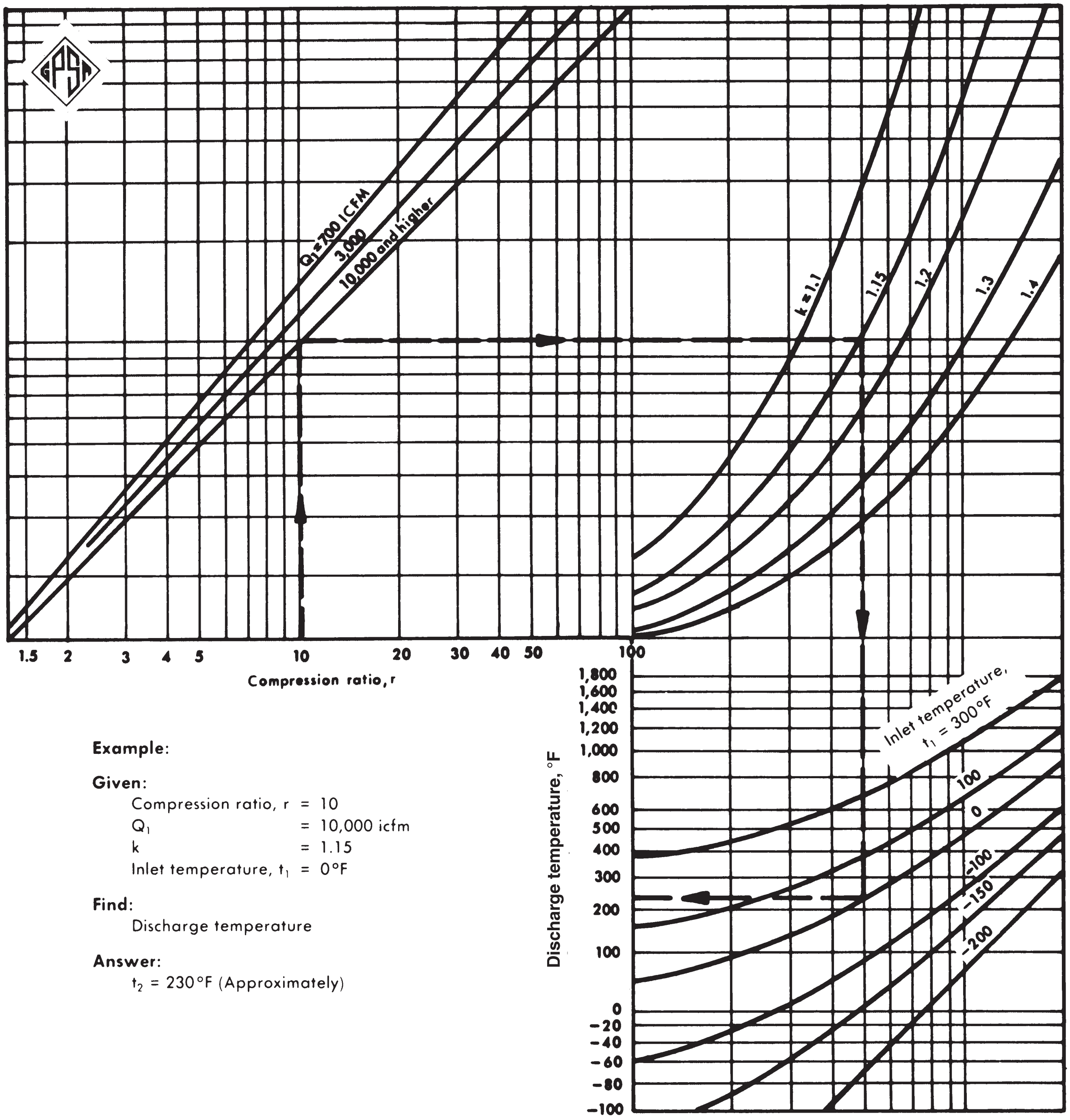

Example:

Given:

Compression ratio, r = 10
Q_1 = 10,000 icfm
k = 1.15
Inlet temperature, t_1 = 0°F

Find:

Discharge temperature

Answer:

t_2 = 230°F (Approximately)

FIG. 13-33

Head

Z = 1

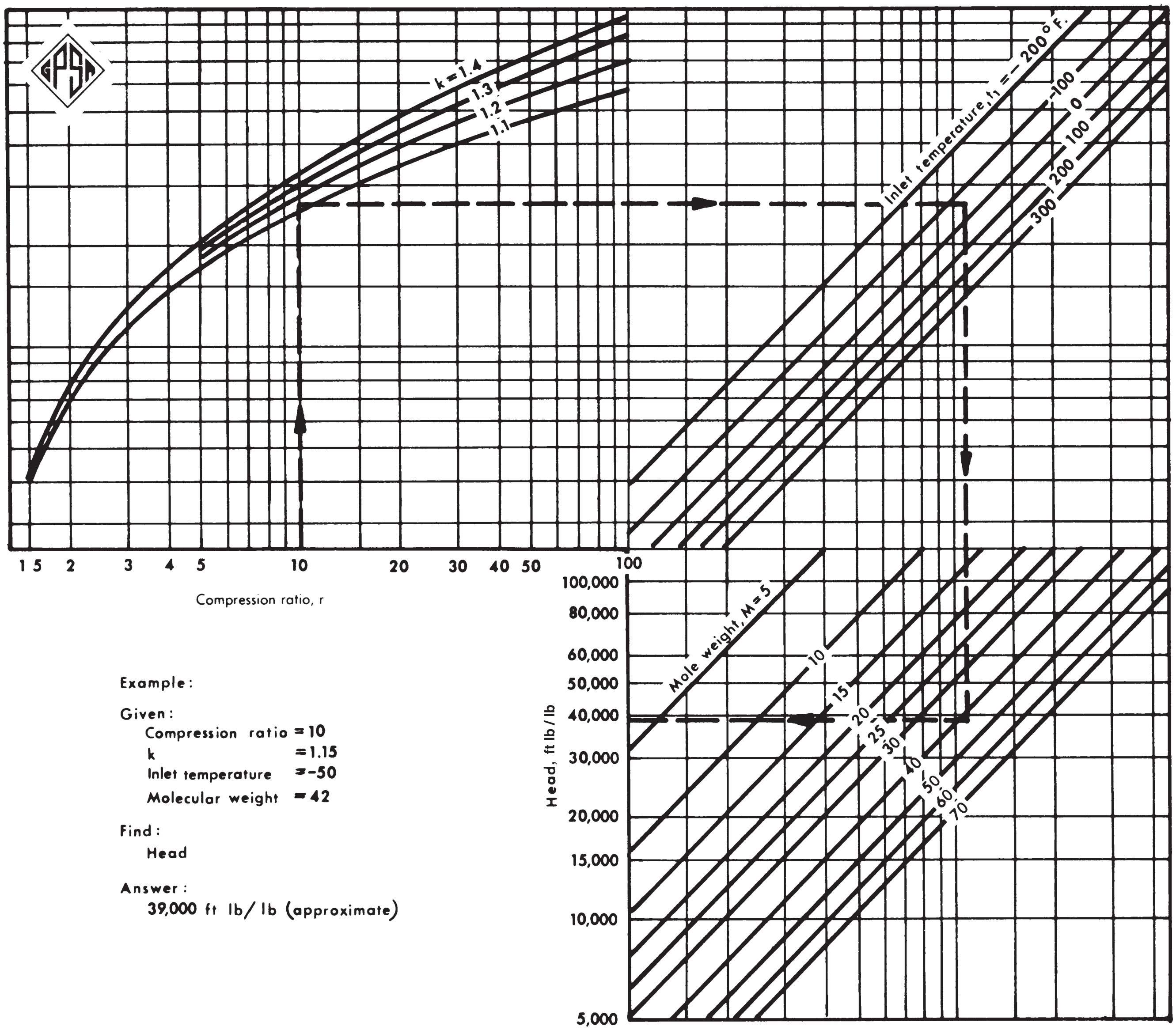

Example:

Given:

Compression ratio = 10
k = 1.15
Inlet temperature = −50
Molecular weight = 42

Find:

Head

Answer:

39,000 ft lb/lb (approximate)

FIG. 13-34

Horsepower Determination

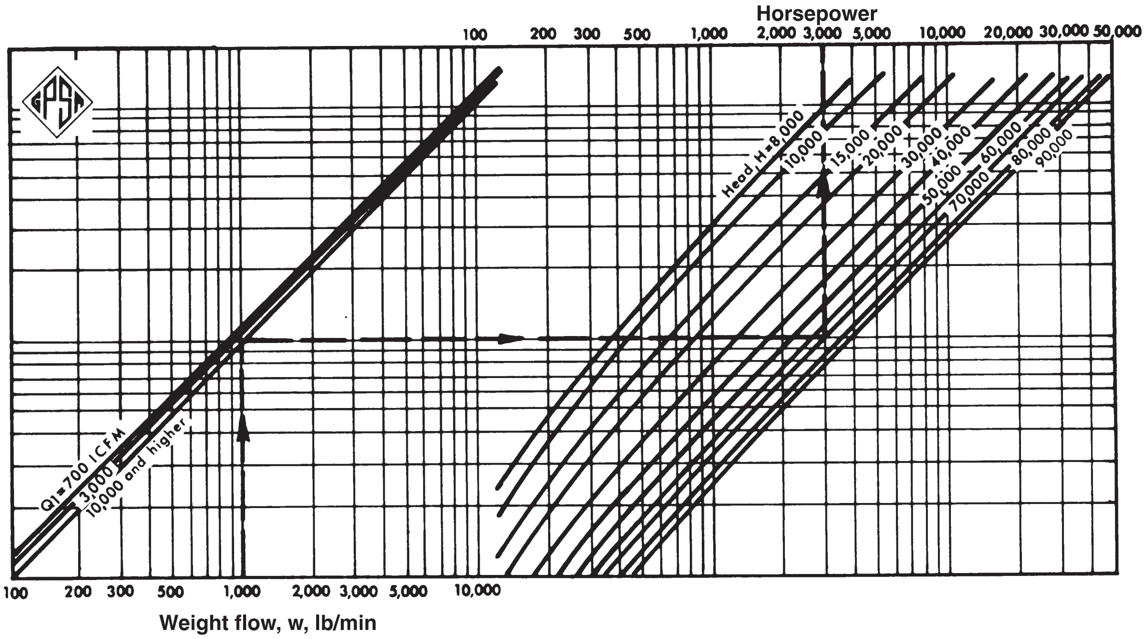

Example:

Given:
Weight flow, w = 1,000 lb/min
Head = 70,000 ft-lb/lb

Find:
Horsepower

Answer:
Hp = 3,000

FIG. 13-35

Efficiency Conversion

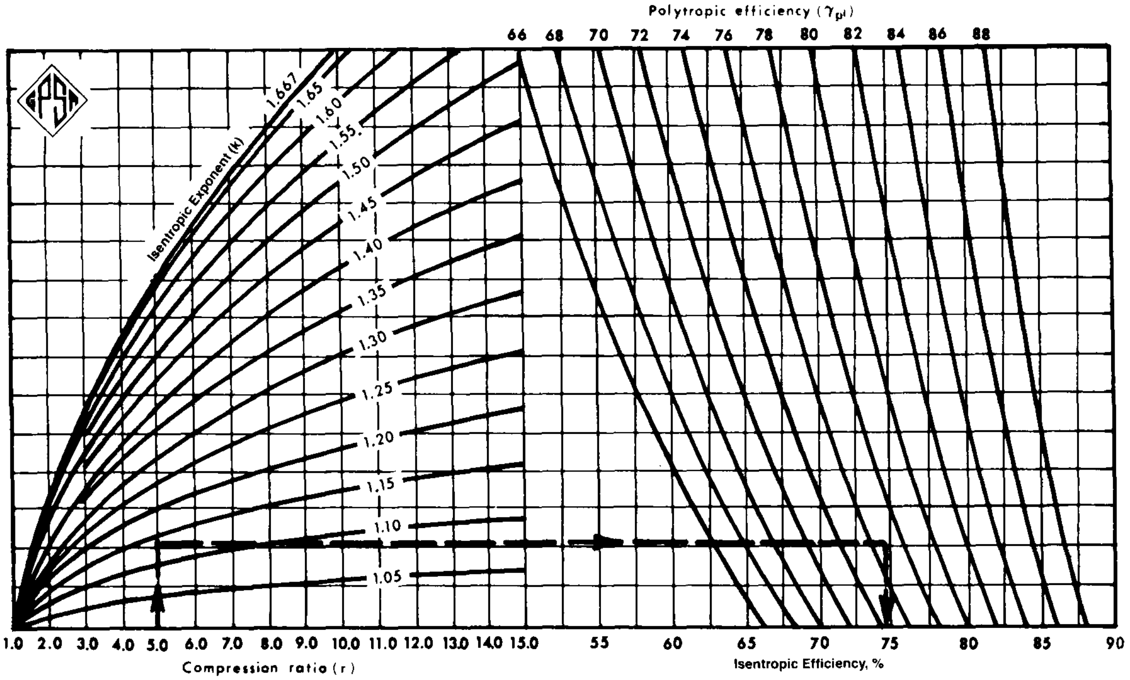

The actual discharge temperature can be approximated:

$$\Delta T_{actual} = T_1 \frac{\left[\left(\frac{P_2}{P_1}\right)^{(k-1)/k} - 1\right]}{\eta_{is}} \qquad \textbf{Eq 13-31}$$

$$T_2 = T_1 + \Delta T_{actual} \qquad \textbf{Eq 13-32}$$

Polytropic Calculation

Sometimes compressor manufacturers use a polytropic path instead of isentropic. Polytropic efficiency is defined by:

$$\frac{n}{(n-1)} = \left[\frac{k}{(k-1)}\right]\eta_p \qquad \textbf{Eq 13-33}$$

(See Fig. 13-35 for conversion of isentropic efficiency to polytropic efficiency.)

The equations for head and gas horsepower based upon polytropic compression are:

$$H_p = \frac{Z_{avg}RT_1}{MW\,(n-1)/n}\left[\left(\frac{P_2}{P_1}\right)^{(n-1)/n} - 1\right] \qquad \textbf{Eq 13-34a}$$

which also can be written in the form:

$$H_p = \frac{1545}{MW}\,\frac{Z_{avg}T_1}{(n-1)/n}\left[\left(\frac{P_2}{P_1}\right)^{(n-1)/n} - 1\right] \qquad \textbf{Eq 13-34b}$$

$$Ghp = \frac{(w)\,(H_p)}{(\eta_p)\,(33{,}000)} \qquad \textbf{Eq 13-35}$$

Polytropic and isentropic head are related by

$$H_p = \frac{H_{is}\,\eta_p}{\eta_{is}} \qquad \textbf{Eq 13-36}$$

The approximate actual discharge temperature can be calculated from:

$$T_2 = T_1\left(\frac{P_2}{P_1}\right)^{\left(\frac{n-1}{n}\right)} \qquad \textbf{Eq 13-37}$$

Mechanical Losses

After the gas horsepower has been determined by either method, horsepower losses due to friction in bearings, seals, and speed increasing gears must be added.

Fig. 13-36 shows losses related to the shaft speed and casing size for conventional multistage units.

Bearings and seal losses can also be roughly computed from Scheel's equation:

$$\text{Mechanical losses} = (Ghp)^{0.4} \qquad \textbf{Eq 13-38}$$

To calculate the brake horsepower:

$$Bhp = Ghp + \text{mechanical losses} \qquad \textbf{Eq 13-39}$$

Compressor Speed

The basic equation for estimating the speed of a centrifugal compressor is:

$$N = (N_{nominal})\sqrt{\frac{H\ total}{(No.\ of\ wheels)\ (H\ max/\ wheel)}}$$

Eq 13-40

where the number of wheels is determined from Fig. 13-37.

FIG. 13-36

Mechanical Losses

Casing Size	Max Flow (inlet acfm)	Nominal Speed (rpm)
1	7,500	10,500
2	20,000	8,200
3	33,000	6,400
4	55,000	4,900
5	115,000	3,600
6	150,000	2,800

a. Bearing horsepower losses

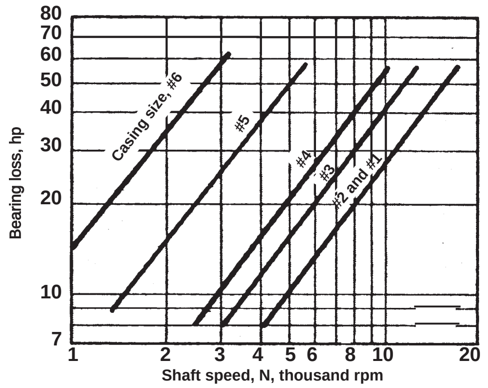

b. Oil-seal horsepower losses

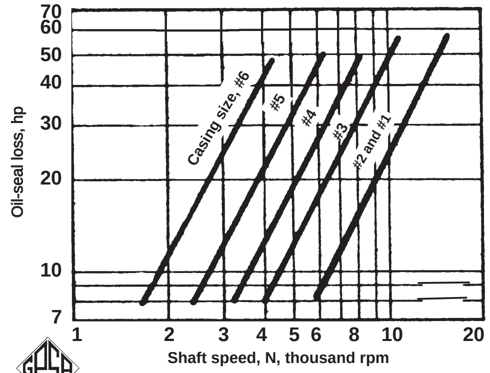

Courtesy Chemical Engineering Magazine

Nominal speeds to develop 10,000 feet of head/wheel can be determined from Fig. 13-23. However, to calculate the maximum head per wheel, the following equation based on molecular weight (or more accurately, density) can be used.

$$H\ max/stage = 15{,}000 - 1{,}500\ (MW)^{0.35} \qquad \textbf{Eq 13-41}$$

This equation will give a head of 10,000 ft for a gas when MW = 30 and 11,000 ft when MW = 16.

P-H Diagram

When a P-H diagram is available for the gas to be compressed, the following procedure should be used. Fig. 13-38 represents a section of a typical P-H diagram.

For the given inlet conditions, the enthalpy can be shown as point 1 on the P-H diagram. Starting from Point 1 follow the line of constant entropy to the required discharge pressure

(P_2), locating the isentropic discharge state point (2_{is}). With these two points located the differential isentropic enthalpy can be calculated from the following equation:

$$\Delta h_{is} = h_{2is} - h_1 \qquad \textbf{Eq 13-42}$$

To convert to isentropic head, the equation is:

$$H_{is} = \Delta h_{is} \, (778 \text{ ft} \bullet \text{lb/Btu}) \qquad \textbf{Eq 13-43}$$

To find the discharge enthalpy:

$$h_2 = \frac{\Delta h_{is}}{\eta_{is}} + h_1 \qquad \textbf{Eq 13-44}$$

The actual discharge temperature can now be obtained from the P-H diagram. The gas horsepower can be calculated using Eq 13-28 and Eq 13-35.

FIG. 13-37

Wheels Required

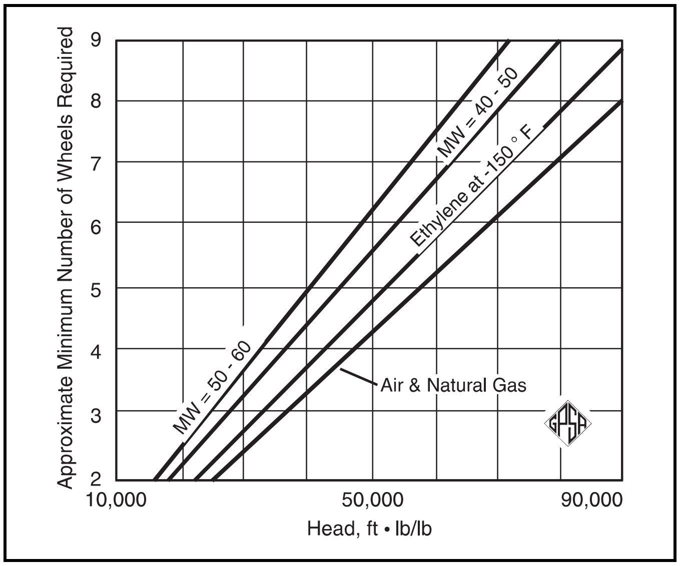

FIG. 13-38

P-H Diagram Construction

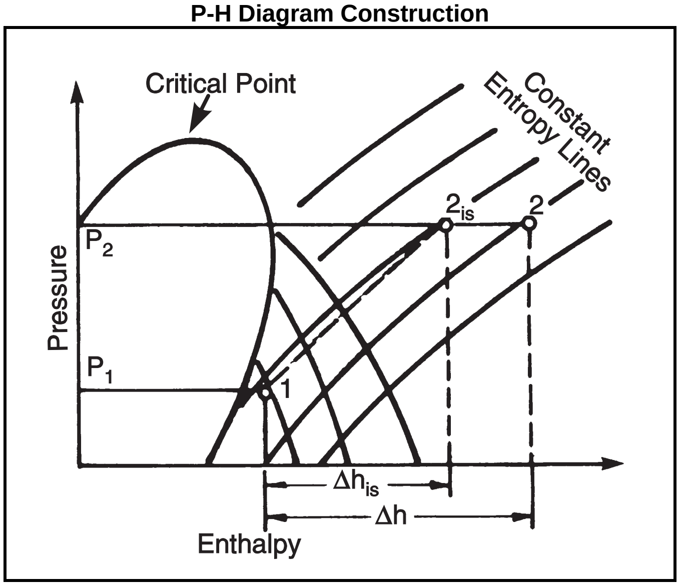

From Fig. 13-37 and Eqs. 13-40 and 13-41, the speed and number of wheels can be estimated.

To convert to polytropic head it will be necessary to assume a polytropic efficiency. See Fig. 13-23 for an efficiency corresponding to the inlet flow. Fig. 13-35 will give a corresponding adiabatic efficiency. The polytropic head may now be determined from Eq. 13-36.

When a P-H diagram is available, it is the fastest and most accurate method of determining compressor horsepower and discharge temperature.

Centrifugal Refrigeration Compressors

Compression ratio per wheel will vary on the order of 1.5 to 2.75 per wheel depending on the refrigerant and speed.

Due to the ease of applying external side loads to centrifugal machines, it is quite common to flash refrigerant from the condenser en route to the evaporators and/or to accept side loads from product being cooled by refrigerant at higher pressures than the lowest evaporator level.

Since side-loading is the practice rather than the exception, it is common to let the centrifugal compressor manufacturer obtain the desired performance characteristics from the following data: evaporator temperature levels; refrigeration loads required in MMBtu/hr; heat rejection medium (air or water); and type of driver.

Refrigeration compressors are also discussed in Section 14.

GENERAL

Flow Limits

Two conditions associated with centrifugal compressors are surge (pumping) and stone-wall (choked flow).

At some point on the compressor's operating curve there exists a condition of minimum flow/maximum head where the developed head is insufficient to overcome the system resistance. This is the surge point. When the compressor reaches this point, the gas in the discharge piping back-flows into the compressor. Without discharge flow, discharge pressure drops until it is within the compressor's capability, only to repeat the cycle.

The repeated pressure oscillations at the surge point should be avoided since it can be detrimental to the compressor. Surging can cause the compressor to overheat to the point the maximum allowable temperature of the unit is exceeded. Also, surging can cause damage to the thrust bearing due to the rotor shifting back and forth from the active to the inactive side.

"Stonewall" or choked flow occurs when sonic velocity is reached at any point in the compressor. When this point is reached for a given gas, the flow through the compressor cannot be increased further without internal modifications.

Interstage Cooling

Multistage compressors rely on intercooling whenever the inlet temperature of the gas and the required compression ratio are such that the discharge temperature of the gas exceeds about 300°F.

There are certain processes that require a controlled discharge temperature. For example, the compression of gases such as oxygen, chlorine, and acetylene requires that the temperature be maintained below 200°F.

The thermal stress within the horizontal bolted joint is the governing design limitation in a horizontally split compressor case. The vertically split barrel-type case, however, is free from the thermal stress complication.

Substantial power economy can be gained by precooling the gas before it enters the interstage impellers. Performance calculations indicate that the head and the horsepower are directly proportional to the absolute gas temperature at each impeller.

The gas may be cooled within the casing or in external heat exchangers.

Two methods of cooling within the casing are used — water cooled diaphragms between successive stages and direct liquid injection into the gas.

Diaphragm cooling systems include high-velocity water circulation through cast jackets in the diffuser diaphragms. The diaphragm coolers are usually connected in series.

Liquid injection cooling is the least costly means of controlling discharge temperatures. It involves injecting and atomizing a jet of water or a compatible liquid into the return channels. In refrigeration units, liquid refrigerant is frequently used for this purpose. Injected liquid also functions as a solvent in washing the impellers free of deposits. Nevertheless, the hazards of corrosion, erosion, and flooding present certain problems resulting in possible replacement of the compressor rotor.

External intercoolers are commonly used as the most effective means of controlling discharge temperatures. The gas is discharged from the compressor casing after one or more stages of compression and, after being cooled, is returned to the next stage or series of stages for further compression.

Intercoolers usually are mounted separately. When there are two or more compressor casings installed in series, individual machines may or may not be cooled or have intercoolers. In some cases, it may be advantageous to use an external cooler to precool gas ahead of the first wheel.

Journal and Thrust Bearings

Radial journal bearings are designed to handle high speeds and heavy loads and incorporate force-feed lubrication. They are self-aligning, straight sleeve, multi-lobe sleeve, or tilting pad type, each sized for good damping characteristics and high stability.

Tilting pad bearings have an advantage over the sleeve type as they eliminate oil whip or half-speed oil whirl which can cause severe vibrations.

Bearing sleeves or pads are fitted with replaceable steel-backed babbitted shells or liners.

Axial thrust bearings are bidirectional, double faced, pivoted-shoe type designed for equal thrust capacity in both directions and arranged for force-feed lubrication on each side.

Thrust bearings are sized for continuous operation at maximum differential pressure including surge thrust loads, axial forces transmitted from the flexible coupling and electric motor thrust.

On units where the thrust forces are low, a tapered land thrust bearing may be used but must be selected for proper rotation direction. At times a combination of pivoted-shoe and tapered land is recommended.

Compressor designs with impellers arranged in one direction usually have a balance drum (piston) mounted on the discharge end of the shaft to minimize axial loads on the thrust bearing.

Fig. 13-39 illustrates typical journal and thrust bearings generally used in horizontally and vertically split casings.

Bearing supports are cast integral with, or bolted to, the case with isolated bearing chambers to prevent lubricating oil leakage into the gas system or contamination of the oil or the gas. Bearing housings are horizontally split and readily accessible for inspection and maintenance. Provisions are made to accommodate pick-ups and sensors for vibration and temperature monitoring.

FIG. 13-39

Journal and Thrust Bearing Assembly

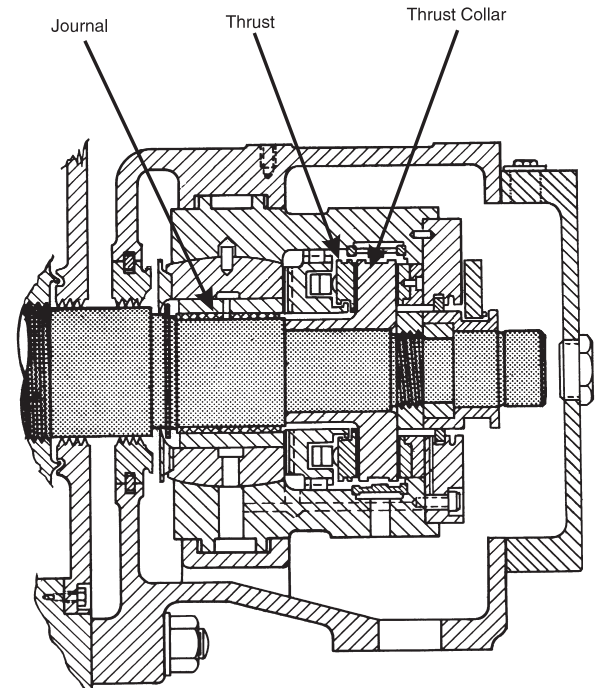

Courtesy of Ingersoll-Rand Co.

Magnetic Bearings

Magnetic bearings are a relatively new development that are gaining in popularity. An active magnetic bearing comprises two main components — a mechanical part and an electronic part. The mechanical parts of the bearing are similar to an electric motor with a rotor and stator. An iron core in the stator is wound with coils through which is fed an electric current, thereby inducing a magnetic field. This magnetic field produces the forces that support the compressor shaft.

The electronic part of the active magnetic bearing is the digital control system. It includes sensors that measure the exact position of the shaft. Deviations from the desired position of the shaft will trigger the software in the control system to adjust the current flowing through the electromagnets that determine the strength of the magnetic field. The currents are adjusted according to a set algorithm that corrects the deviation. Magnetic bearings are available in radial and axial/thrust designs.

Advantages

- Reduced space/weight requirements due to elimination of the need for a bearing lube oil system
- Reduced long term costs for maintenance and repairs
- Reduced bearing-related losses (near zero friction)
- Increased reliability and availability
- Improved machine monitoring/diagnostic capabilities
- Higher speeds possible.

Limitations

- Generally physically larger than "conventional" bearings
- Higher complexity
- Requires electrical power

See Fig. 13-40 for a schematic of a typical magnetic bearing arrangement.

Shaft Seals

Shaft seals are provided on all centrifugal compressors to limit, or completely eliminate, gas leakage along the shaft where it passes through the casing.

With the wide range of temperature, pressure, speed, and operating conditions encountered by compressors, there can be no one universal seal, or seal system, to handle all applications.

Basically, the designs of seals available are: labyrinth (gas), restrictive ring (oil or gas), liquid film (oil), and mechanical (contact) (oil or gas).

A mechanical (contact) seal, Fig. 13-41, has the basic elements similar to the liquid film seal. The significant difference is that clearances in this seal are reduced to zero. The seal operates with oil pressure 35 to 50 psi above internal gas pressure as opposed to 5 psi in the liquid film seal.

FIG. 13-40

Active Magnetic Bearing System

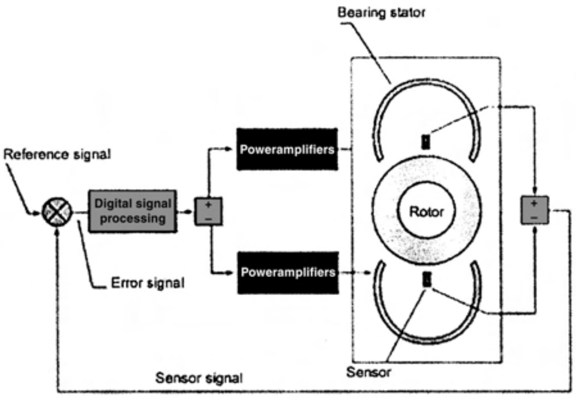

Courtesy of SKF Nova AB

FIG. 13-41

Mechanical (Contact) Shaft Seal

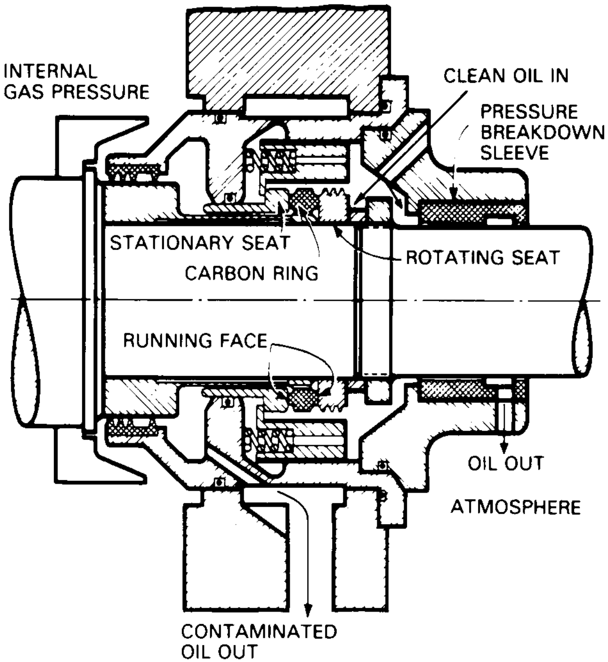

Courtesy of American Petroleum Institute, Standard 617

The mechanical (contact) seal can be applied to most gases, but finds its widest use on clean, heavier hydrocarbon gases, refrigerant gases, etc.

A mechanical gas seal uses the process gas as working fluid to eliminate the seal oil system. See Figs. 13-42 through 13-47.

The liquid film seal, Figs. 13-45 and 13-46, was also developed for the severe conditions of service but requires higher oil circulation rate than the mechanical (contact) type.

The seal consists of two sleeves which run at close clearance to the shaft with a liquid injected between the sleeves to flow to the seal extremities. The sleeves are lined with babbitt or a similar non-galling material which is compatible with the properties of the compressed gas and the sealing liquid.

The sealing liquid, usually a lubricating oil, is introduced between the two rings at a controlled differential pressure of about 5 psi above the internal gas pressure, presenting a barrier to direct passage of gas along the shaft. This fluid also performs the very important functions of lubricating the sleeves and removing heat from the seal area.

Lubrication and Seal-oil Systems

On all centrifugal compressors that have force-feed lubricated bearings, a lubrication oil system is required. When oil-film or mechanical (contact) seals are used, a pressurized seal-oil system must be provided.

Each system is designed for continuous operation with all the elements (oil reservoir, pumps with drivers, coolers, filters,

FIG. 13-42

Single Gas Seal

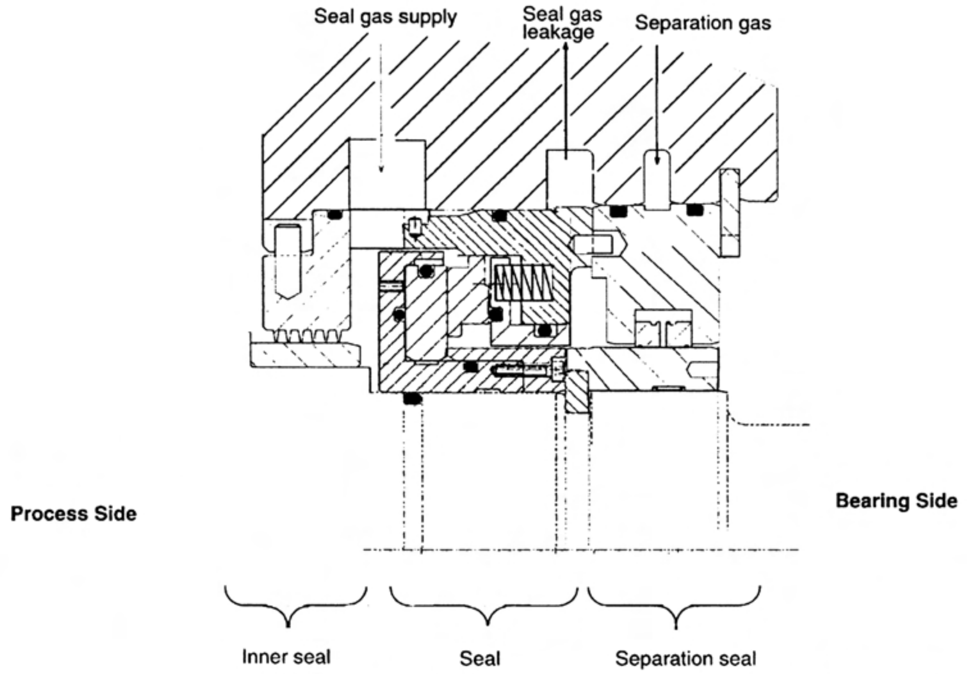

Reproduced Courtesy of the American Petroleum Institute, STD 617

FIG. 13-43

Double Gas Seal

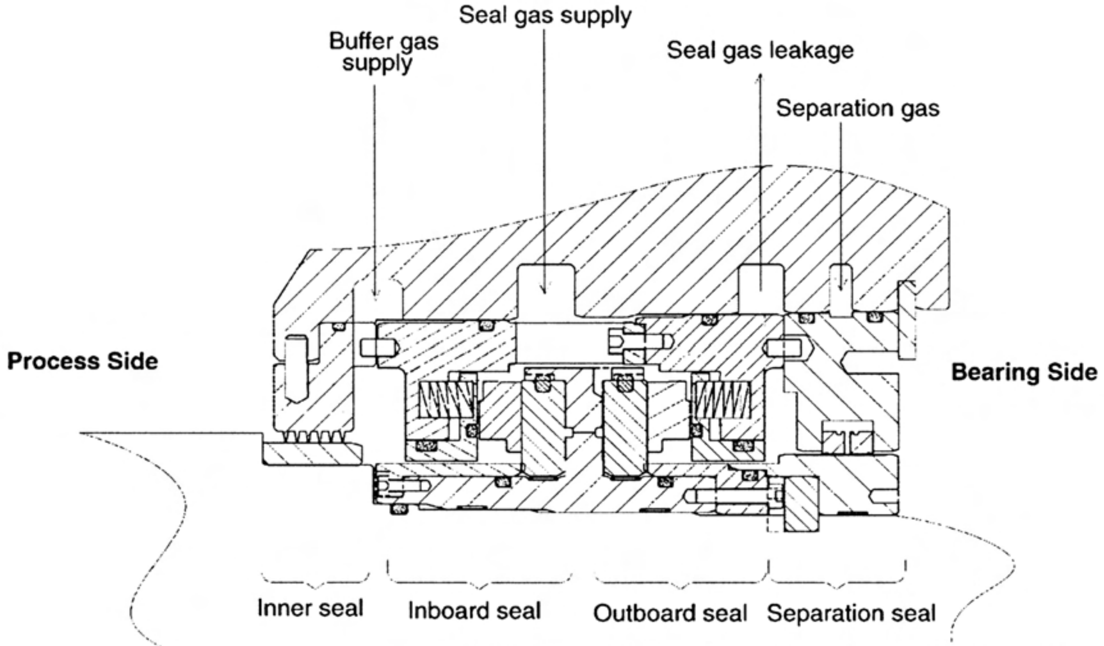

Reproduced Courtesy of the American Petroleum Institute, STD 617

FIG. 13-44

Tandem Gas Seal

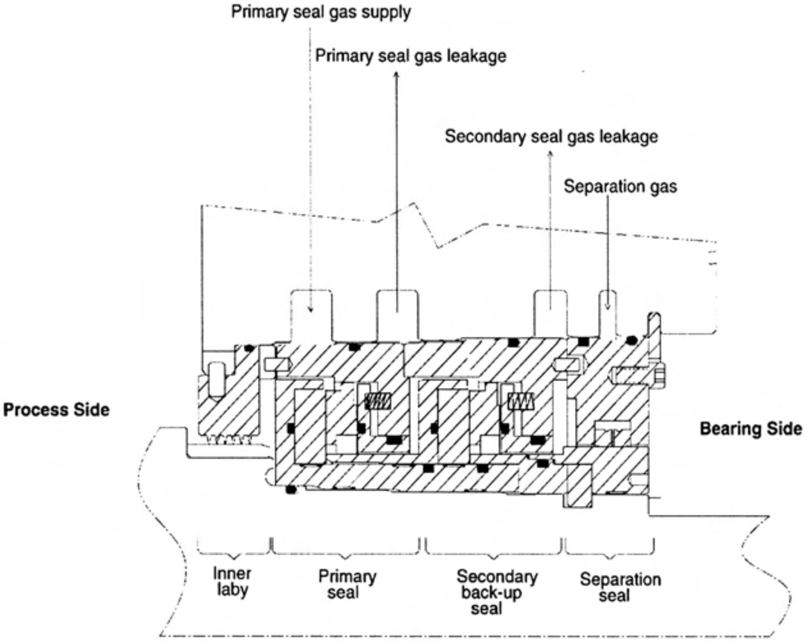

Reproduced Courtesy of the American Petroleum Institute, STD 617

pressure gauges, control valves, etc.) piped and mounted on a flat steel fabricated base plate located adjacent to the compressor. The compressor manufacturer normally supplies both systems in order to have overall unit responsibility.

Depending on the application, lubrication and seal-oil systems may be furnished as combined into one system, or as one lubrication system having booster pumps to increase the pressure of only the seal oil to the required sealing level. In service involving heavily contaminated gases, separate lube-oil and seal-oil systems should be used.

The lubrication system may supply oil to both compressor and driver bearings (including gear) couplings (if continuously lubricated), as well as turbine governor, trip and throttle valve, and hydraulic control system.

A single lubricant shall be used in all system equipment, usually an oil, having approximate viscosities of 150 Saybolt Universal Seconds (SUS) at 100°F and 43 SUS at 210°F.

In addition to all the elements of a common pressurized lubrication system, the seal oil system requires a collection system for the oil. Depending on the gas composition, a degassing tank may be installed in the seal oil trap return line to remove the oil-entrained gas prior to return of the seal oil to the common oil reservoir. The flow past the outer sleeve passes through an atmospheric drain system and is returned to the reservoir. The relatively low flow through the inner sleeve is collected in a drain trap or continuous drainer and may be returned to the reservoir or discarded, depending upon the degree and type of contamination which occurred while it was in contact with the internal gas.

Compressors using only liquid film seals should be provided with a seal-oil system which incorporates an overhead surge

FIG. 13-45

Liquid Film Shaft Seal with Pumping Bushing

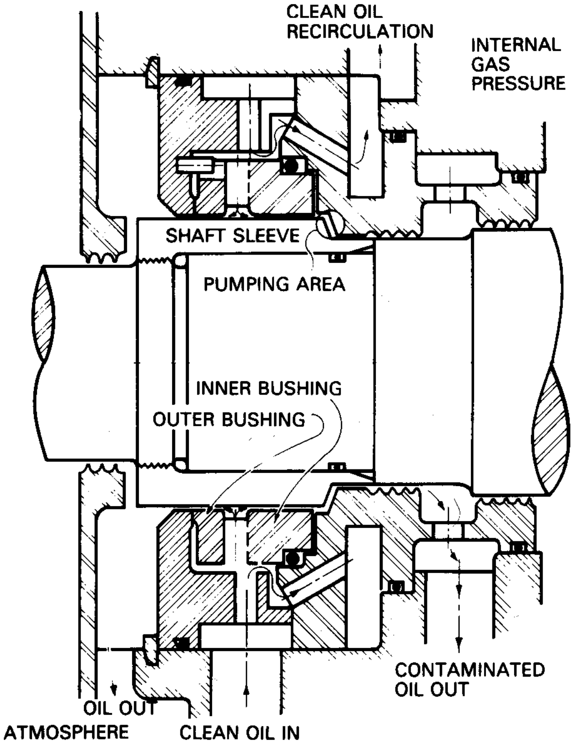

Courtesy of American Petroleum Institute, Standard 617 tank. The surge tank provides seal-oil capacity for coastdown in case of a compressor shutdown.

In combined seal-oil and lube-oil systems when large amounts of contaminants are present in the process gas, the seal-oil design may call for buffer gas injection to form a barrier between the compressed gas and the seal oil.

Fig. 13-47 shows clean sweet buffer gas being injected into the center of a labyrinth seal preceding the oil film seal with seal oil supplied between the two sleeves. Part of the seal oil flows across the inner sleeve and mixes with buffer gas and then drains into the seal oil trap. The other part of the seal oil flows across the outer sleeve, mixes with the bearing lube oil drain flow, and returns to the common lube- and seal-oil reservoir.

FIG. 13-46

Liquid Film Shaft Seal with Cylindrical Bushing

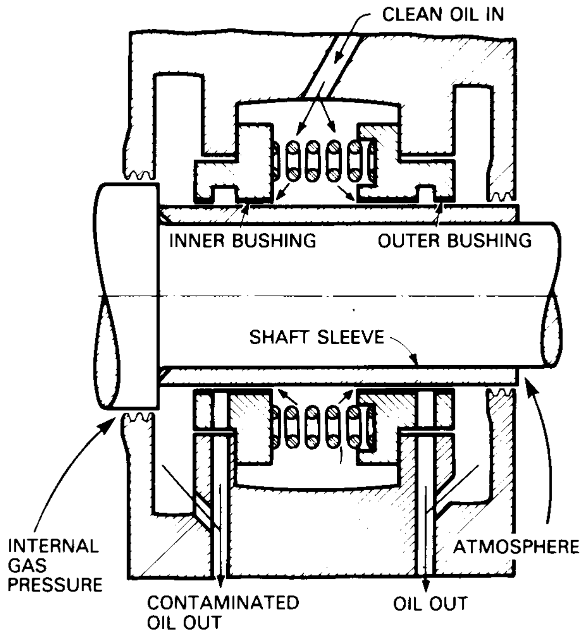

Courtesy of American Petroleum Institute, Standard 617

FIG. 13-47

Combined Seal-Oil and Lube-Oil System with External Sweet Buffer Gas

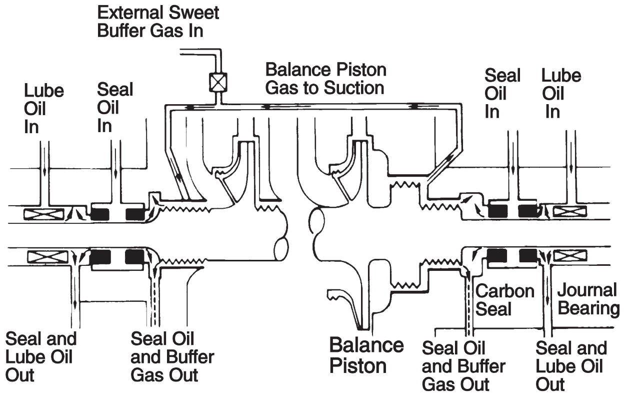

Courtesy Solar Turbines International

Drivers — Centrifugal compressors can be driven by a wide variety of prime movers including electric motors, steam turbines, gas combustion turbines, and gas-expander turbines. Each driver has its own design parameters. A motor drive presents limitations in operation of the compressor due to constant and low speed. The constant speed restriction is minimized by suction or discharge throttling. The low speed restriction is corrected by introduction of a speed increasing gear. A steam turbine, on the other hand, has variable speed capability that allows more control of the compressor capacity or discharge pressure, and its high speed permits the compressor to be directly connected to the driver. In the case of a single-shaft gas turbine, the power output is limited at a reduced speed.

Drivers are discussed in Section 15.

CONTROL SYSTEMS

Centrifugal compressor controls can vary from the very basic manual recycle control to elaborate ratio controllers. The driver characteristics, process response, and compressor operating range must be determined before the right controls can be selected.

The most efficient way to match the compressor characteristic to the required output is to change speed in accordance with the fan laws (affinity laws, see Eqs 13-22 to 13-24):

$$\frac{N_1}{N_2} = \frac{Q_1}{Q_2} = \frac{\sqrt{H_1}}{\sqrt{H_2}}$$

One of the principal advantages of using steam or gas turbines as drivers for compressors is that they are well suited to variable-speed operation. With such drivers, the speed can be controlled manually by an operator adjusting the speed governor on the turbine or, alternatively, the speed adjustment can be made automatically by a pneumatic or electric controller that changes the speed in response to a pressure or flow signal.

Pressure Control at Variable Speed

The control system operates as follows:

The pressure transmitter (PT) in Fig. 13-48 senses the process pressure. It converts this signal to a signal proportional to

FIG. 13-48

Pressure Control at Variable Speed

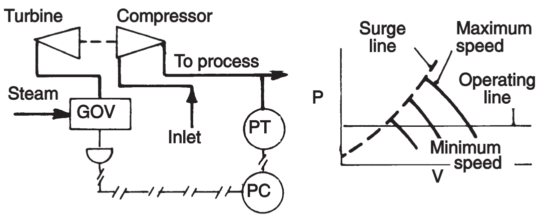

the process pressure and sends it to the pressure controller (PC).

The pressure controller amplifies the transmitter signal and sends a modified signal to the final element. Depending on system requirements the controller may require additional correction factors called reset and rate.

The final element in this case is speed control. This mechanism varies the turbine-governor speed setting over a predetermined range.

As the load decreases, pressure will rise. An increase in process pressure above the set value will cause the signal to reach the governor and reduce the speed, maintaining the desired system pressure.

Volume Control at Variable Speed

If the nature of the process requires constant volume delivered, then the arrangement shown in Fig. 13-49 would be used.

Here, the flow transmitter (FT) senses the process flow, converts the signal to a signal proportional to the process flow, and sends it to the flow controller (FC).

The flow controller amplifies the transmitter signal and sends a modified signal to the final element. Reset and rate correction factors may be needed.

The final element is speed control, which is accomplished by a mechanism that varies the turbine-governor speed setting. An increase in flow over set point would cause a signal to reach the governor and reduce the speed to maintain the desired system flow.

When using electric motors as constant speed drivers, the centrifugal compressor is normally controlled by a suction throttling device such as butterfly valve or inlet guide vanes. Throttling the suction results in a slightly lower suction pressure than the machine is designed for, and thus requires a higher total head if the discharge pressure remains constant. This can be matched to the compressor head-capacity curve, i.e., higher head at reduced flow. In throttling the inlet, the density of the gas is reduced, resulting in a matching of the required weight flow to the compressor inlet-volume capabilities at other points on the head/capacity curve.

FIG. 13-49

Volume Control at Variable Speed

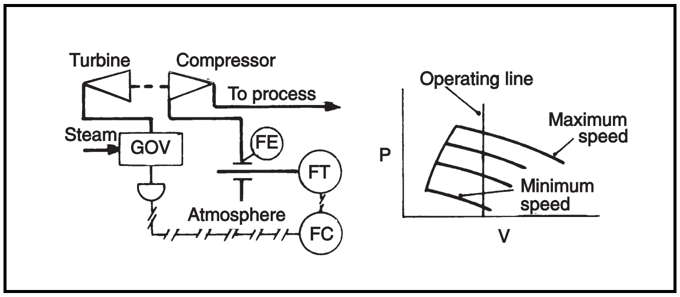

Pressure Control at Constant Speed

The control system shown in Fig. 13-50 has the pressure signal sensed and amplified in a similar manner as described in the scheme for variable speed control (Fig. 13-48).

FIG. 13-50

Pressure Control at Constant Speed

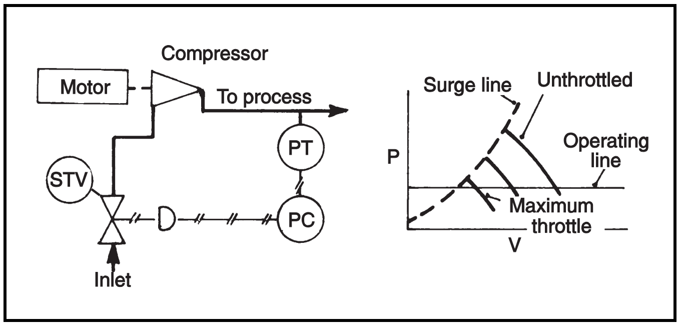

FIG. 13-51

Volume Control at Constant Speed

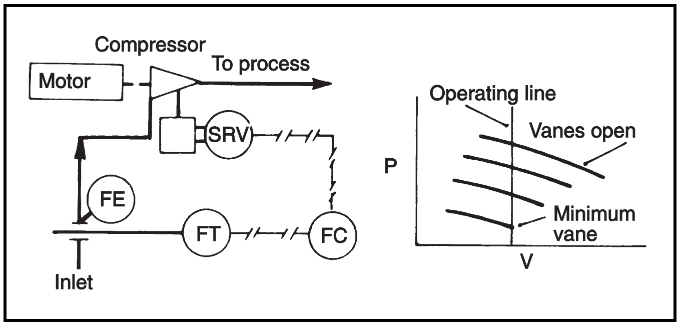

The final element is a suction throttle valve (STV) that reduces the flow of gas into the compressor.

A process pressure increase over a set value would cause a signal to reach the suction throttle valve (STV) and would partially close the valve in order to reduce the inlet pressure.

Volume Control at Constant Speed

The control scheme for this arrangement is shown in Fig. 13-51.

The flow transmitter (FT) senses the process flow using an orifice or venturi as the primary flow element (FE), converts this to a signal that is proportional, and sends this signal to the flow controller (FC). The flow controller amplifies the transmitter signal and sends a modified signal to the final element. Reset and derivative controller actions may be required.

The final element is the compressor guide-vane mechanism. The guide vanes are adjusted by means of a positioning cylinder. This cylinder is operated by a servo-valve (SRV) that receives a signal from the flow controller.

Here, an increase in flow above the set point causes a signal to reach the final element, which will result in the closing of the guide vanes to decrease flow.

Adjustable Inlet Guide Vanes — The use of adjustable inlet guide vanes is the most efficient method of controlling a constant speed compressor. The vanes are built into the inlet of the 1st stage, or succeeding stages, and can be controlled through the linkage mechanism either automatically or manually.

The vanes adjust the capacity with a minimum of efficiency loss and increase the stable operating range at design pressure. This is accomplished by pre-rotation of the gas entering the impeller which reduces the head-capacity characteristics of the machine. Fig. 13-52 illustrates the effect of such control at various vane positions.

Prior to control selection, the economics of inlet guide vanes must be considered because of their higher initial cost, complex mechanism, maintenance, and requirement for frequent adjustment.

Anti-surge Control

It is essential that all centrifugal compressor control systems be designed to avoid possible operation in surge which usually occurs below 50% to 70% of the rated flow.

Compressor surge is a large pressure and volume fluctuation that takes place when attempting to operate at a higher pressure ratio than design maximum. The surge limit line (see Fig. 13-52) can be reached from a stable operating point by either reducing flow or decreasing suction pressures. An anti-surge system senses conditions approaching surge, and maintains the unit pressure ratio below the surge limit by recycling some flow to the compressor suction. Care must be taken to cool this recycle stream.

Volume, pressure rise, or pressure ratio may be used as control parameters to sense an approaching surge condition. Such a condition will be established by the characteristic curve of the compressor.

A volume-controlled anti-surge system is shown in Fig. 13-53. The flow transmitter (FT) senses the process flow using an orifice or venturi as a primary flow element (FE). It converts the signal to one that is proportional to the process flow and sends it to the surge controller (SC).

The surge controller compares the transmitted signal to the set-point signal. If the set-point signal is exceeded, the controller amplifies the signal difference and sends this modified signal to the final element. Reset and rate correction factors may be needed.

The final element is a surge control valve (SCV). The valve releases pressure buildup at the discharge of the compressor.

As flow decreases to less than the minimum volume set-point, a signal will cause the surge control valve to open. The valve opens, as required, to keep a minimum volume flowing through the compressor.

FIG. 13-52

Effect of Adjustable Inlet Guide Vanes on Compressor Performance

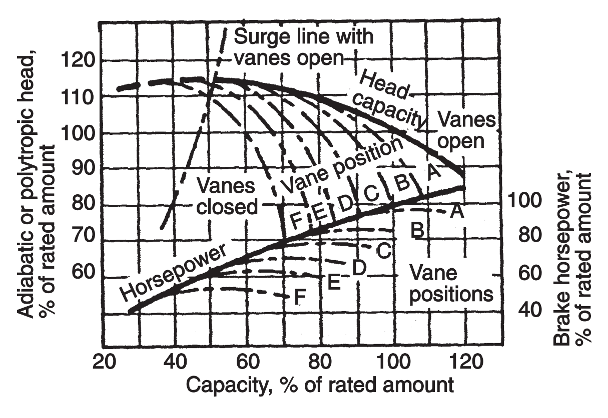

Courtesy Chemical Engineering Magazine

FIG. 13-53

Anti-Surge Control–Minimum Volume

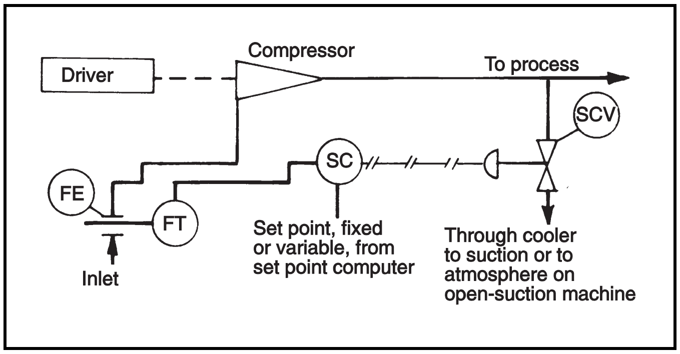

FIG. 13-54

Anti-Surge Control–Pressure Limiting

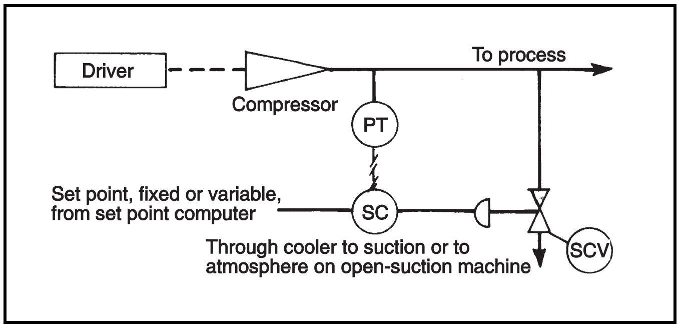

For a pressure-limiting anti-surge control system, see Fig. 13-54. The pressure transmitter (PT) senses the process pressure. It converts this to a signal that is proportional to process pressure and sends it to the surge controller (SC).

The surge controller compares the transmitted signal to the set-point signal. If the set-point signal is exceeded, the controller amplifies the signal difference and sends this modified signal to the surge control valve. Reset and rate correction factors may also be required. The blow-off valve relieves a pressure buildup on the discharge end of the compressor.

A process pressure increase over the pressure set-point signal will cause the blowoff valve to open. The valve opens as required to keep the pressure limited to a minimum volume of gas flowing through the compressor.

A set-point computer may be required on multiparameter compressor-control systems where the surge set point may change. Suction temperature, suction pressure, and speed are examples of parameters that cause the surge point of the compressor to change.

In the design of a compressor system, any changes that may occur from a single operating point in the overall process must be carefully considered. In many instances, automatic controls are needed to maintain the highest degree of system performance. In any event, the choice of manual or automatic controls is dictated by the operating pattern of the centrifugal compressor.

The user, compressor manufacturer, and contractor should work closely together to determine the minimum control system required. Various phases of operation, such as start-up, shut-down, initial runs, and normal runs, should be investigated to make certain that a workable system has been designed.

Vibration Control System

This control system may be provided to monitor the driver behavior at the shaft bearings for detection of excessive lateral vibration and axial movement and for protection against possible machinery failure through alarm and/or shutdown devices.

The system may protect not only the compressor but also the driver, such as a steam or gas turbine, that usually runs at the same high speed as the compressor. When a speed increasing or reducing gear unit is furnished between the compressor and driver, also consider monitoring vibration at the gear shaft bearings.

The main system components are: variation transducer(s), signal amplifier(s) with d-c power supply, and vibration monitor and/or analyzer.

Vibration transducers fall into three categories: displacement probe, velocity pick-up, and accelerometer.

The displacement probe is most commonly used for equipment with high value, as it can measure shaft vibration relative to bearing housing. Output signal from each transducer is small and, therefore, it must be amplified before being transmitted to a vibration monitor or analyzer.

FIG. 13-55

Vibration Severity Chart[1]

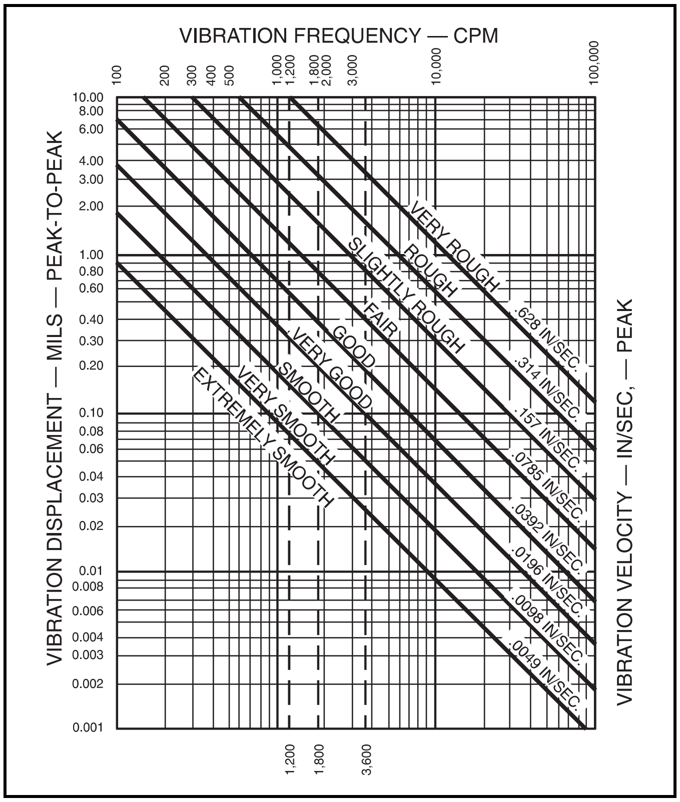

Fig. 13-55 shows a vibration severity chart for use as a guide in judging vibration levels as a warning of impending trouble.

For more information on vibration monitoring systems, see API Standard 670, Noncontacting Vibration and Axial Position Monitoring System, and API Standard 678, Accelerometer-Based Vibration Monitoring System.

OPERATIONAL CONSIDERATIONS

Rotor Dynamics and Critical Speeds

The demand for smooth-running turbomachinery requires careful analysis of rotor dynamics taking into account bearing performance, flexibility, critical speed, and rotor response.

Equally important is to analyze the dynamic behavior of the compressor for sudden changes in load due to start-up, shutdown, or loss of power supply.

Successful rotor design is the result of accurate calculation of critical speeds. A critical speed occurs at a condition when the rotor speed corresponds to a resonant frequency of the rotor-bearing support system. Under no circumstances should the compressor be allowed to run at a critical speed for a prolonged length of time as the rotor vibrations amplified by this condition can cause machinery failure.

Critical Speed Map

A critical speed map is one of various methods used to predict the operational behavior of the rotor. First, the critical speeds for a given rotor geometry are calculated for a range of assumed bearing support stiffness values. The result is a map like that shown in Fig. 13-56. The bearing stiffness characteristics are determined from the geometry of the bearing support system, and cross-plotted on the critical speed map.

The map depicts the values of the undamped critical speeds and how they are influenced by bearing stiffness. The intersections of the bearing stiffness curve and the critical speed lines represent the undamped critical speeds. The intersection points generally indicate margins between the criticals and the operating speed range.

FIG. 13-56

Undamped Critical Speed Map

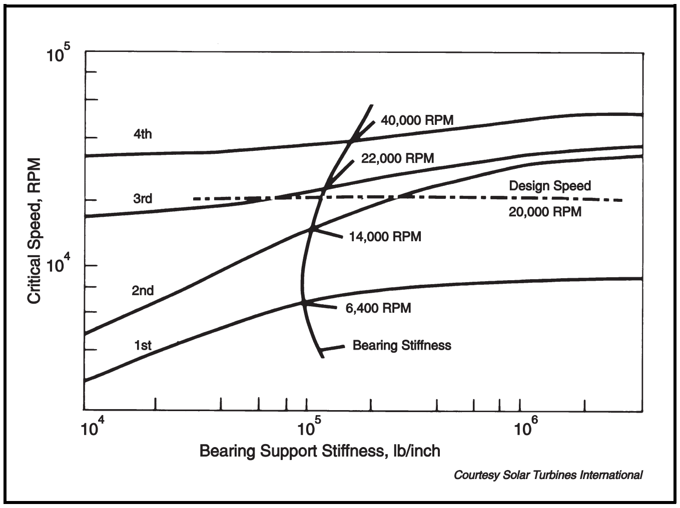

Courtesy Solar Turbines International

However, the use of this map is very limited because it is based on a simplified undamped, circular synchronous analysis with no cross-coupled or unbalance effects. It is a good trending tool showing a machine's basic dynamic characteristics. It may not accurately depict peak response frequencies.

The critical speed map is used extensively because it enables determination of bearing or support stiffness by correlating test-stand data.

Unbalance Response Analysis

This method predicts rotor-bearing system resonances to greater accuracy than the critical speed map. Here, bearing support stiffness and damping are considered together with synchronous vibration behavior for a selected imbalance distribution. A computer is normally required to solve the resulting differential equations. Satisfactory results depend on the accurate input of bearing stiffness and damping parameters.

Several runs are usually made with various amounts and locations of unbalance. The plot of results of a typical unbalance response study is shown in Fig. 13-57. Each curve represents the rotor behavior at a particular station or axial location such as those corresponding to the midspan, bearings, and overhangs.

No rotor can be perfectly balanced and, therefore, it must be relatively insensitive to reasonable amounts of unbalance.

The unbalance-response results predict the actual amplitudes that permit calculations of the unbalance sensitivity. This is expressed in mils of vibration amplitude per ounce-inch or gram-inch of unbalance.

The peaks of the response curves represent the critical speed locations. Fig. 13-58 shows limits of placement of critical speeds as specified in the API Standard 617, Centrifugal Compressors for General Refinery Services.

Critical speeds should not encroach upon operating speed ranges, and the separation margin of encroachment (SM) from all lateral modes is required to be at least:

1. Twenty (20) percent over the maximum continuous speed for rigid shaft rotor systems.
2. Fifteen (15) percent below any operating speed and twenty (20) percent above the maximum continuous speed for flexible shaft rotor system.

FIG. 13-57

Unbalance Response Plot

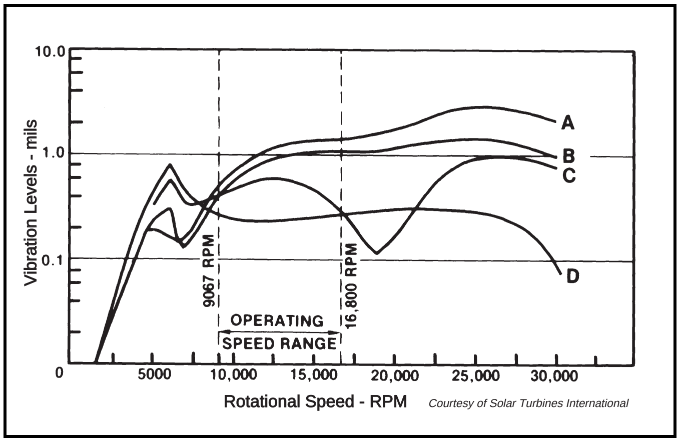

Courtesy of Solar Turbines International

Field Performance

Once the compressor has been installed, quite often the performance of the system is to be tested. The same information is required for evaluation as was supplied for the initial selection. This information is essential:

1. Inlet conditions
    a. Flow (scfm, acfm, or lb/min)
    b. Gas analysis
    c. Pressure, psia
    d. Temperature, °F
2. Intermediate conditions
    a. Pressure at intermediate nozzles, psia
    b. Temperature at intermediate nozzles, °F
3. Discharge conditions
    a. Pressure, psia
    b. Temperature, °F
4. Compressor speed, rpm
5. Power requirement from driver if available (steam flow, amperes, etc.)

If all these conditions were given except flow, it would not be possible to determine the compressor operating point. The system resistance curve imposed on the typical performance is not always constant. Discharge temperature of the compressor is a good indication as to the operation of the compressor. However, such items as recycle (internal or external), different gas analysis, different suction conditions, and different flow can affect the values. The efficiency at part load or overload will normally be lower than at design conditions.

Test procedures should be agreed upon between the manufacturer and user before a performance test is run. A test point should be run several times to see if the results can be dupli-

FIG. 13-58

Rotor Response Plot

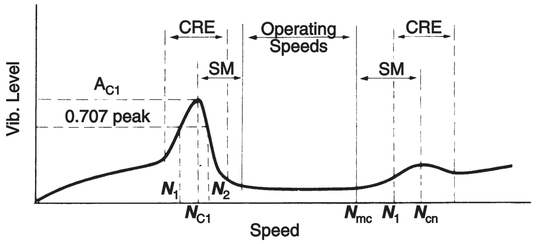

N_{c1} = Rotor 1st critical, center
N_{cn} = frequency, cycles per minute
N_t = Critical speed, *n*th
N_{mc} = Trip speed
N_1 = Maximum continuous speed,
N_2 = 105 percent
N_2N_1 = Initial (lesser) speed at .707 x peak amplitude (critical)
Final (greater) speed at .707 x peak amplitude (critical)
Peak width at the "half-power" point

AF = Amplification Factor
SM = $= \frac{N_{c1}}{N_2 - N_1}$
CRE = Separation Margin
A_{c1} = Critical Response Envelope
A_{cn} = Amplitude @ N_{c1}
Amplitude @ N_{cn}

NOTE: Curve shape is for illustration only and does not necessarily represent any actual rotor response plot.

Courtesy American Petroleum Institute, Standard 617 cated. Calibrated instruments should be used to improve the accuracy of the test data.

Troubleshooting

Operational troubles occurring in service may be due to a variety of causes.

If the trouble cannot be traced to adverse gas flow conditions or liquid “slugs” present in the system, Fig. 13-59 can be used as a guide for troubleshooting frequently encountered problems.

Careless operation and maintenance needs little comment. Lack of proper care of any machine is bound to result in a succession of minor troubles eventually leading to a major breakdown.

INTEGRALLY GEARED COMPRESSORS

An integrally geared compressor utilizes a central driven bull gear with typically 2–4 high speed pinion driven shafts. One or two impellers can be mounted on each pinion shaft. See Figures 13-60 and 13-61. This forms a compact unit for the multistage compression of a wide range of gases.

Integrally geared compressors offer the following potential advantages:

FIG. 13-59

Probable Causes of Centrifugal Compressor Trouble

Trouble	Probable Cause(s)
Low Discharge Pressure	1. Compressor not up to speed. 2. Excessive compressor inlet temperature. 3. Low inlet pressure. 4. Leak in discharge piping. 5. Excessive system demand from compressor.
Compressor Surge	1. Inadequate flow through the compressor. 2. Change in system resistance due to obstruction in the discharge piping or improper valve position. 3. Deposit buildup on rotor or diffusers restricting gas flow.
Low Lube Oil Pressure	1. Faulty lube oil pressure gauge or switch. 2. Low level in oil reservoir. 3. Oil pump suction plugged. 4. Leak in oil pump suction piping. 5. Clogged oil strainers or filters. 6. Failure of both main and auxiliary oil pumps. 7. Operation at a low speed without the auxiliary oil pump running (if main oil pump is shaft-driven). 8. Relief valve improperly set or stuck open. 9. Leaks in the oil system. 10. Incorrect pressure control valve setting or operation. 11. Bearing lube oil orifices missing or plugged.
Shaft Misalignment	1. Piping strain. 2. Warped bedplate, compressor or driver. 3. Warped foundation. 4. Loose or broken foundation bolts. 5. Defective grouting.
High Bearing Oil Temperature Note: Lube oil temperature leaving bearings should never be permitted to exceed 180°F.	1. Inadequate or restricted flow of lube oil to bearings. 2. Poor conditions of lube oil or dirt or gummy deposits in bearings. 3. Inadequate cooling water flow lube oil cooler. 4. Fouled lube oil cooler. 5. Wiped bearing. 6. High oil viscosity. 7. Excessive vibration. 8. Water in lube oil. 9. Rough journal surface.
Excessive Vibration Note: Vibration may be transmitted from the coupled machine. To localize vibration, disconnect coupling and operate driver alone. This should help to indicate whether driver or driven machine is causing vibration.	1. Improperly assembled parts. 2. Loose or broken bolting. 3. Piping strain. 4. Shaft misalignment. 5. Worn or damaged coupling. 6. Dry coupling (if continuously lubricated type is used). 7. Warped shaft caused by uneven heating or cooling. 8. Damaged rotor or bent shaft. 9. Unbalanced rotor or warped shaft due to severe rubbing. 10. Uneven build-up of deposits on rotor wheels, causing unbalance. 11. Excessive bearing clearance. 12. Loose wheel(s) (rare case). 13. Operating at or near critical speed. 14. Operating in surge region. 15. Liquid "slugs" striking wheels. 16. Excessive vibration of adjacent machinery (sympathetic vibration).
Water In Lube Oil	1. Condensation in oil reservior. 2. Leak in lube oil cooler tubes or tube-sheet.

FIG. 13-60

Typical Integrally Geared Compressor Showing Nomenclature of Key Parts

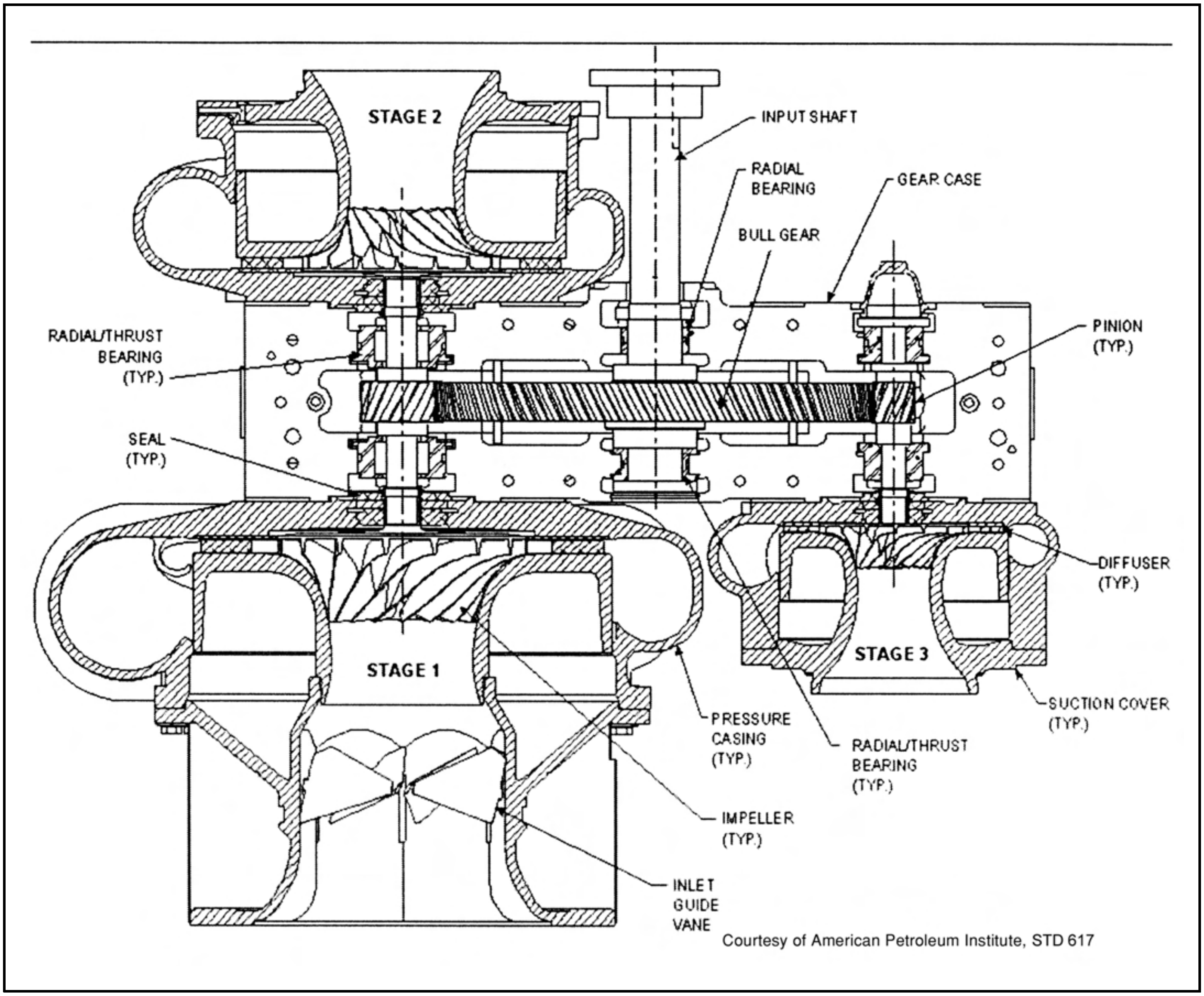

Courtesy of American Petroleum Institute, STD 617

- low power consumption due to different impeller speeds, tailored aerodynamics and optimized auxiliaries.
- wide operating range and improved part load efficiencies due to adjustable inlet guide vanes at the first or at all compression stages.
- multiservice capability
- packaged designs available. A package includes the compressor, process coolers, lube oil console, process piping and all tubing and wiring.

Design requirements of integrally geared compressors are covered by API Standard 617.

AXIAL COMPRESSORS

Axial compressors are basically high-flow, low-pressure machines, in contrast to the lower flow, high-pressure centrifugal compressors (the axial compressors used in gas turbines are often designed for higher pressures and compression ratios). Axial compressors are generally smaller and significantly more efficient than comparable centrifugal compressors. The characteristic feature of an axial compressor, as its name implies, is the axial direction of flow through the machine. An axial flow compressor requires more stages than a centrifugal due to the lower pressure rise per stage. In general, it takes approximately twice as many stages to achieve a given pressure ratio as would be required by a centrifugal. Although the axial compressor requires more stages, the diametral size of an axial is typically much lower than for a centrifugal. The axial compressor's capital cost is usually higher than that of a centrifugal but may be justified based on efficiency and size.

The axial compresor utilizes alternating rows of rotating and stationary blades to transfer the input energy from the rotor to the gas in order to generate an increase in gas pressure. A multistage axial flow compressor has two or more rows of rotating blades operating in series on a single rotor in a single

FIG. 13-61

Typical Integrally Geared Compressor Arrangement Showing Nomenclature of Key Elements

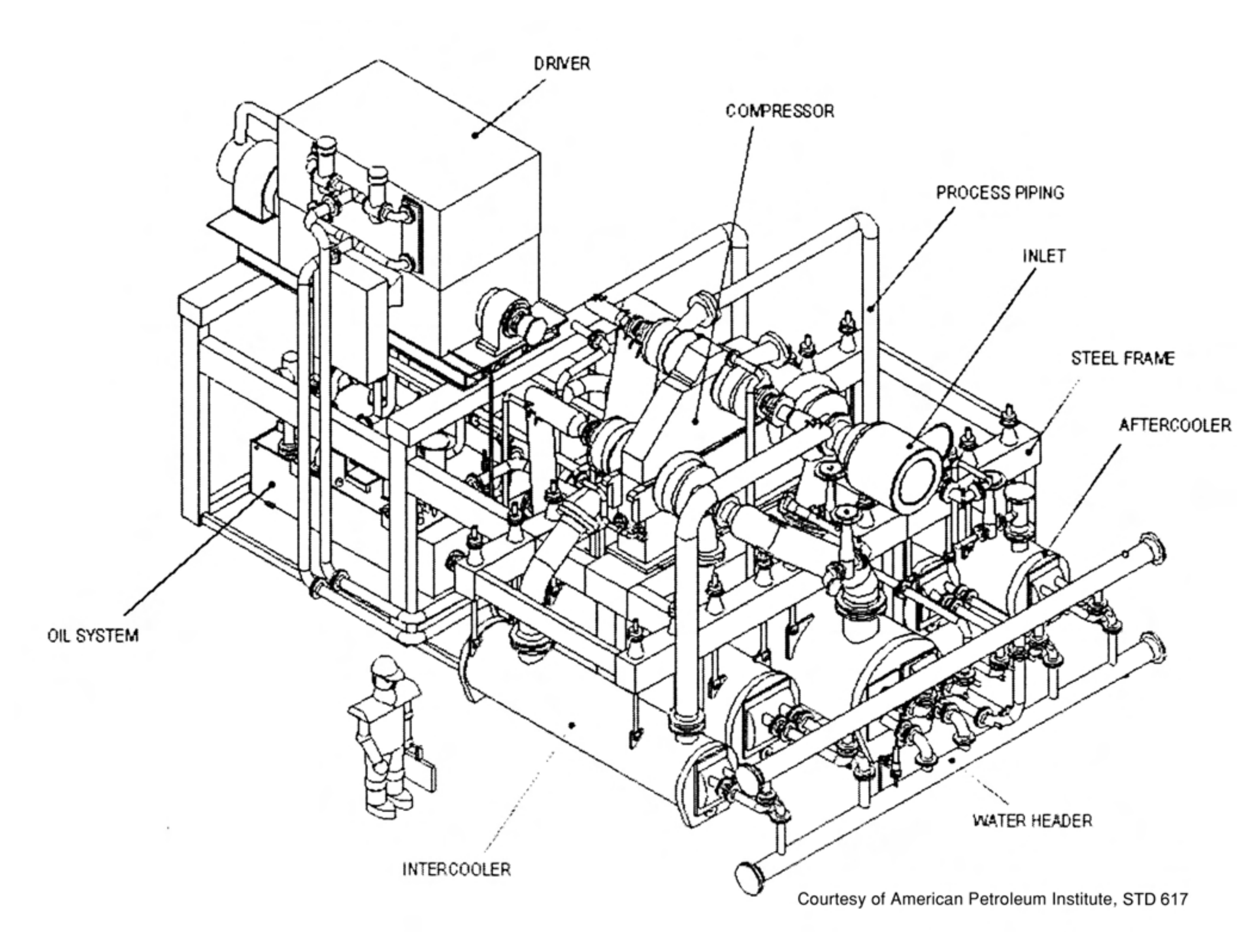

Courtesy of American Petroleum Institute, STD 617

casing. The casing contains the stationary vanes (stators) for directing the air or gas to each succeeding row of rotating blades. These stationary vanes, or stators, can be fixed or variable angle, or a combination of both.

A cross-sectional view of a typical axial flow compressor is shown in Fig. 13-62.

Performance Capabilities — The volume range of the axial compressor starts at approximately 30,000 cfm with a typical upper end of the flow range at 400,000 cfm. Much larger axial machines have been built. As can be seen in Fig. 13-3, the flow range for the axial overlaps the higher end of the range for typical centrifugal compressor coverage. At the lower end of the axial's flow range, a thorough evaluation of axial vs centrifugal must normally be made. However, at the higher end flows, the axial compressor often becomes the obvious choice. As stated previously, the physical size of the axial is far smaller than the comparable centrifugal machine that would be required, and the efficiency of the axial is usually better. In many high flow applications, the axial is often a better match for the drivers that would typically be selected.

Because of the low pressure rise per stage, axial compressors are always manufactured as multistage machines. Axial compressors are in general low pressure machines. Typical discharge pressures are usually less than approximately 100 psig. They are very commonly utilized in refineries and other industrial processes for high volume, low pressure air supply applications. The most common application of axial compressors, besides aircraft jet engine use, is in gas turbines. In gas turbine applications, the axial air compressor is often designed to operate at final discharge pressures of up to around 500 psig.

Horsepower requirements for axial flow compressors in process service typically range from 3,000 to 65,000 HP for single casing units, depending on flow and pressure ratio requirements. Efficiencies for axial compressors are high, especially for larger machines, and can reach 90% (adiabatic).

Design requirements for centrifugal compressors are covered by API Standard 617.

FIG. 13-62

Typical Axial Compressor Showing Nomenclature of Key Parts

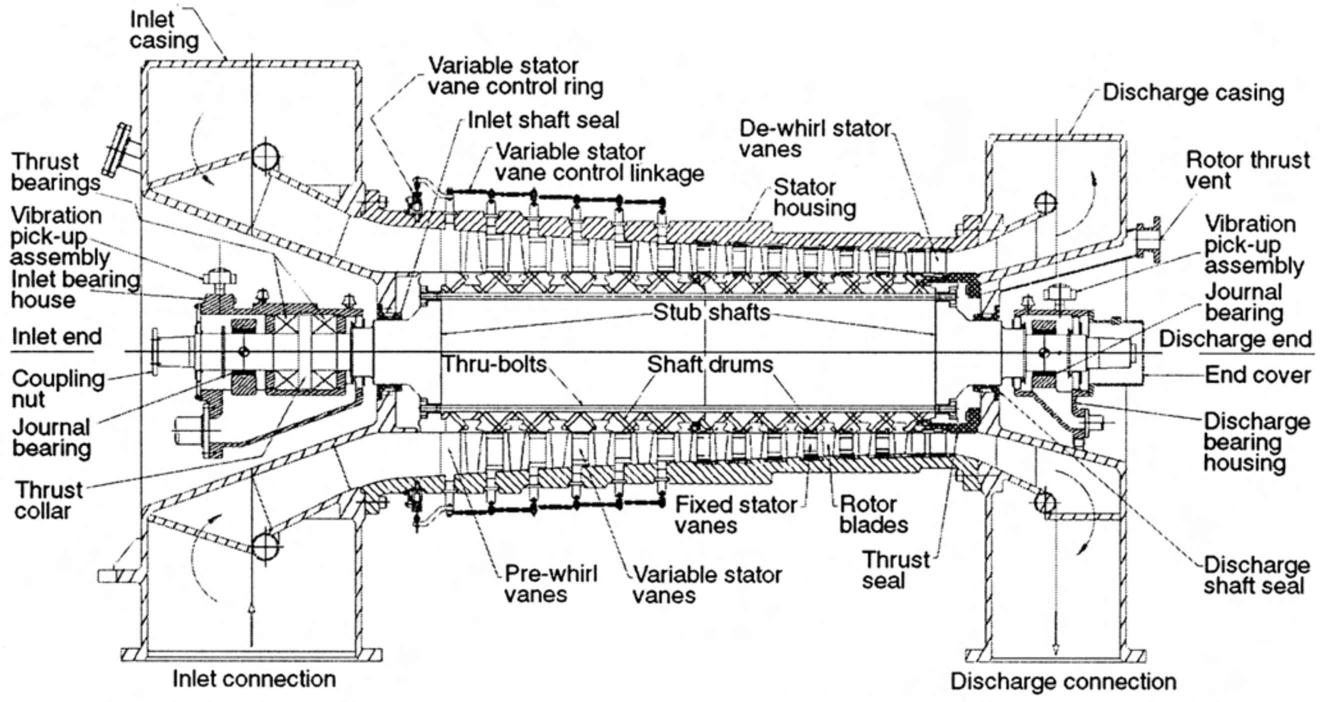

Courtesy of American Petroleum Institute, STD 617

SCREW COMPRESSORS

Screw compressors, also known as helical lobe compressors, fall into the category of rotary positive displacement compressors. Fig. 13-63 shows a cutaway cross-section of a typical rotary screw compressor.

Rotary screw compressors are available in oil-free (dry) or oil-injected designs. Oil-free compressors typically use shaft-mounted gears to keep the two rotors in proper mesh without contact. Applications for oil-free compressors include all processes that cannot tolerate contamination of the compressed gas or where lubricating oil would be contaminated by the gas. Oil-injected screw compressors are generally supplied without timing gears. The injected lubricant provides a layer separating the two screw profiles as one screw drives the other. Oil-injected machines generally have higher efficiencies and utilize the oil for cooling as well, which allows for higher compression ratios in a single screw compressor stage.

Although originally intended for air compression, rotary screw compressors are now compressing a large number of gases in the hydrocarbon processing industries. In particular, screw compressors are widely used in refrigeration service and are gaining in popularity in the gas production business in booster and gas gathering applications.

Gas compression is achieved by the intermeshing of the rotating male and female rotors. Power is applied to the male rotor and as a lobe of the male rotor starts to move out of mesh with the female rotor a void is created and gas is taken in at the inlet port. As the rotor continues to turn, the intermesh space is increased and gas continues to flow into the compressor until the entire interlobe space is filled. Continued rotation brings a male lobe into the interlobe spacing compressing and moving the gas in the direction of the discharge port. The volume of gas is progressively reduced as it increases in pressure. Further rotation uncovers the discharge port and the compressed gas starts to flow out of the compressor. Continued rotation then moves the remaining trapped gas out while a new charge is drawn into the suction of the compressor into the space created by the unmeshing of a new pair of lobes as the compression cycle begins again. Fig. 13-64 provides a sequence of drawings showing compression process. Screw compressors are usually driven by constant speed motors, with capacity control normally achieved via an internal regulating device known as a slide valve. By moving the slide in a direction parallel to the rotors, the effective length of the rotors can be shortened. This provides smooth control of flow from 100 percent down to 10 percent of full compressor capacity.

Rotary screw compressors in use today cover a range of suction volumes from 180 to 35,000 acfm, with discharge pressures up to 580 psig. Typical adiabatic efficiency will be in the range of 70 to 80%.

Design requirements for screw compressors are covered under API Standard 619.

ROTARY-SLIDING VANE COMPRESSORS

Rotary-sliding vane compressors (Fig. 13-65) are positive displacement machines. They have several applications, in-

FIG. 13-63

Rotary Screw Compressor

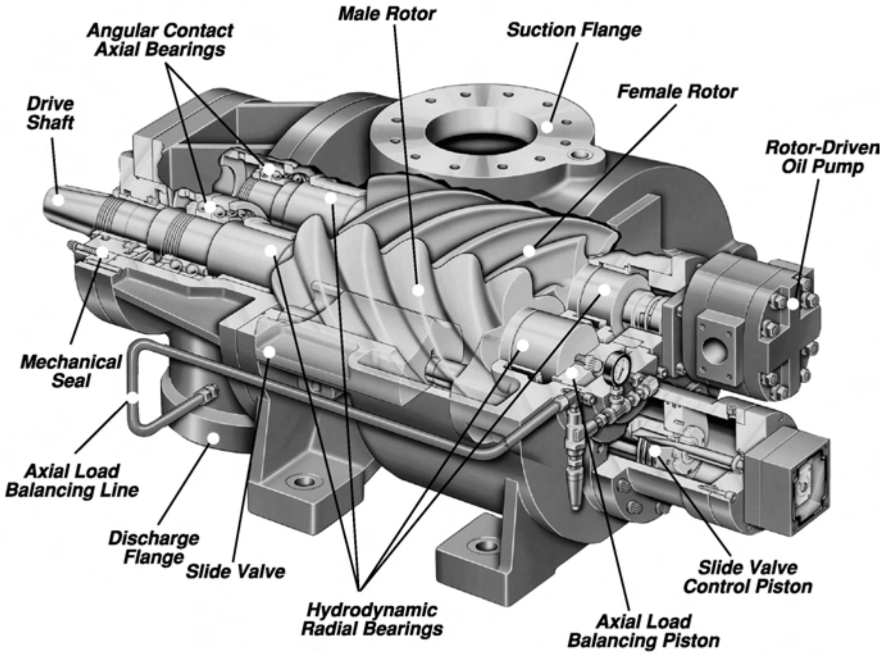

Courtesy of Ariel Corporation

FIG. 13-64

Working Phases of Rotary Screw Compressor

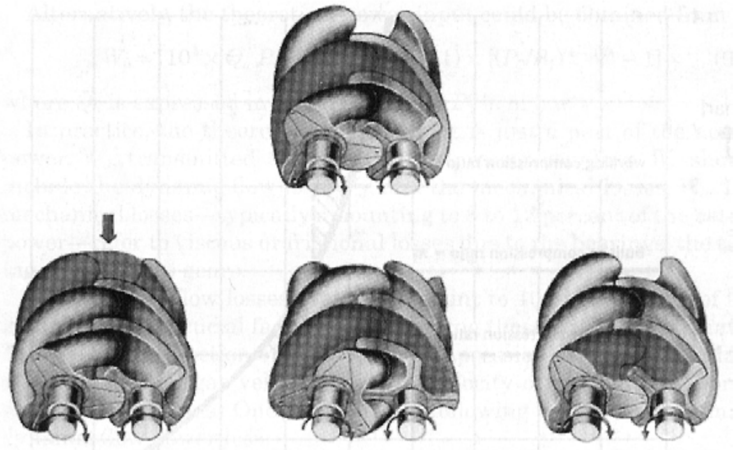

Courtesy of Aerzen USA Company

(a)

Suction intake Gas enters through the intake aperture and flows into the helical grooves of the rotors which are open

(b)

Compression process As rotation of the rotors proceeds, the air intake aperture closes, the volume diminishes and pressure rises.

(c)

Discharge The compression process is completed, the final pressure attained, the discharge commences.

FIG. 13-65

Sliding Vane Compressor and Principal Components: Rotor and Shaft (1), Bearings (2), Blades (3), Mechanical Seals (4), Cylinder and Housing (5), Heads and Covers (6), Gaskets (7), Lube Supply Line (8), Coupling (9)

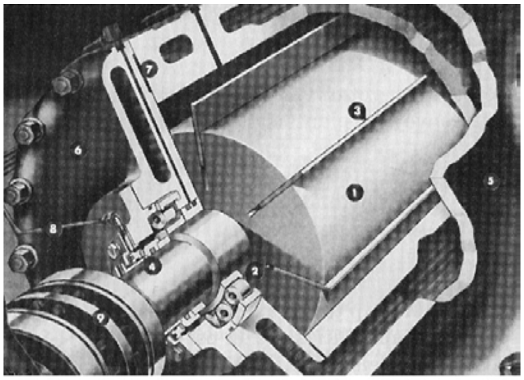

Courtesy of A-C Compressor Corporation

FIG. 13-66

Operating Principle of Sliding Vane Compressor

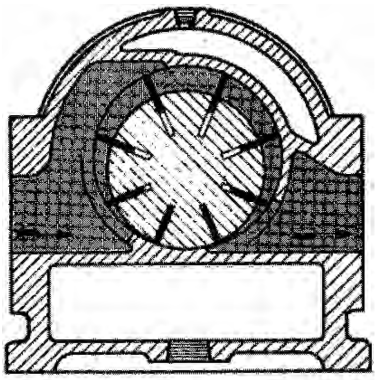

Courtesy of A-C Compressor Corporation

cluding vapor recovery and vacuum service. Each unit has a rotor eccentrically mounted inside a water jacketed cylinder. The rotor is fitted with blades that are free to move radially in and out of longitudinal slots. These blades are forced against the cylinder wall by centrifugal force. Fig. 13-66 illustrates how individual pockets are thus formed by the blades, and how the gas inside these pockets is compressed as the rotor turns. Oil is injected into the flow stream to lubricate the vanes, and is recovered via a downstream scrubber and recycled to the inlet.

Sliding vane compressors are available in single- and multistage configurations. Typical single-stage capacities are ranging through 3200 cfm and 50 psig; two-stage compressors deliver pressures from 60 to 150 psig and flows up to approximately 1800 cfm. Most applications of rotary-sliding vane compressors in oil and gas service involve fairly small units, normally under 150 HP.

EJECTORS

An ejector works by converting the pressure energy of a motive fluid into kinetic energy (velocity) as it flows through a relatively small converging — diverging nozzle. See Fig. 13-67. The increased velocity of the motive fluid causes a corresponding reduction in pressure creating suction in the mixing chamber, into which the process fluid is drawn. The process fluid mixes with and becomes entrained in the motive fluid stream. The mixed fluid then passes through the converging — diverging diffuser, where the velocity is converted back into pressure energy. The resultant discharge pressure is higher than the suction pressure of the ejector.

Historically, ejectors have been primarily used to generate vacuum. Ejectors can be staged in series to achieve deep vacuum levels. They can use many different types of motive fluid. Air and steam are the most common. To avoid contamination and other problems, it is important to choose a motive fluid compatible with the process fluid. Ejectors are one of the few compressor types that are relatively immune to liquid carryover in the suction gas.

An ejector is not as efficient as most types of mechanical compressors but has the advantage of simplicity and no moving parts. This helps make ejectors very reliable with minimal maintenance costs.

FIG. 13-67

Cross Section of an Ejector

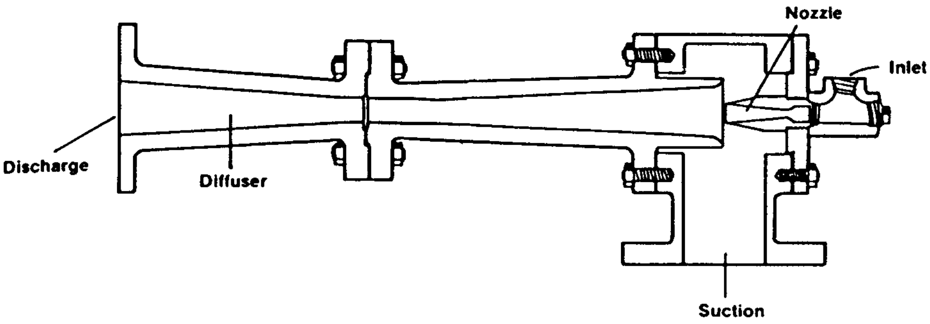

Turboexpanders

The use of turboexpanders in gas processing plants began in the early sixties. By 1970, most new gas processing plants for ethane or propane recovery were being designed to incorporate the particular advantages characteristic of an expander producing usable work. The trend in the gas processing industry continues toward increased use of the turboexpander.

Selection of a turboexpander process cycle is indicated when one or more of the following conditions exist:

1. "Free" pressure drop in the gas stream.
2. Lean gas.
3. High ethane recovery requirements (i.e., over 30% ethane recovery).
4. Compact plant layout requirement.
5. High utility costs.
6. Flexibility of operation (i.e., easily adapted to wide variation in pressure and products).

There are multiple factors in addition to the ones listed above that affect a final process selection. If two or more of the above conditions are coexistent, generally a turboexpander process selection will be the best choice.

Fig. 13-68 shows a typical low temperature turboexpander process for recovering ethane and heavier hydrocarbons from a natural gas stream.

Fig. 13-69 represents the pressure-temperature diagram for this expander process. The solid curve represents the plant inlet gas. The solid line on the right is the dew point line. At a fixed pressure and, if the temperature of the gas is to the right of this dew point line, the gas is 100 percent vapor. If the gas is cooled, liquid starts to condense when the temperature reaches the dew point line. As cooling continues, more liquid is condensed until the bubble point line is reached — the solid line on the left. At this point, all of the gas is liquid. Additional cooling results in colder liquid.

Downstream of the gas treating facilities, the inlet gas is represented by point 1 on both Fig. 13-68 and 13-69. As the gas is cooled by the gas/gas exchangers and demethanizer side exchanger, its temperature moves along the dotted line to point 2 (Fig. 13-69). At 2, the gas enters the expander inlet separator where the condensed liquid is separated from the vapor. This vapor now has its own pressure-temperature diagram, as represented by the dashed curve. At the expander inlet, the gas is on its dew point line.

As the gas flows through the expander, its pressure-temperature path is shown by the dashed line from point 2 to point 3. Point 3 represents the outlet of the expander. The importance of using the expander as a driver for a compressor can be seen in Fig. 13-69. If the gas had been expanded without doing any driver work, the expansion path would be from point 2 to point 4. This is called a Joule-Thomson, or constant enthalpy expansion. The outlet temperature and pressure would be higher than that accomplished in the expander (nearly isentropic) expansion process.

Note that the pressure at Point 4 is not as low as that attained by flow through the expander (Point 3). This is because it has been assumed for this example that, without the expander running (therefore the brake compressor also not running), the process cannot restore the demethanizer overhead vapor to the residue gas pressure using the separate recompressor alone.

FIG. 13-68

Example Expander Process

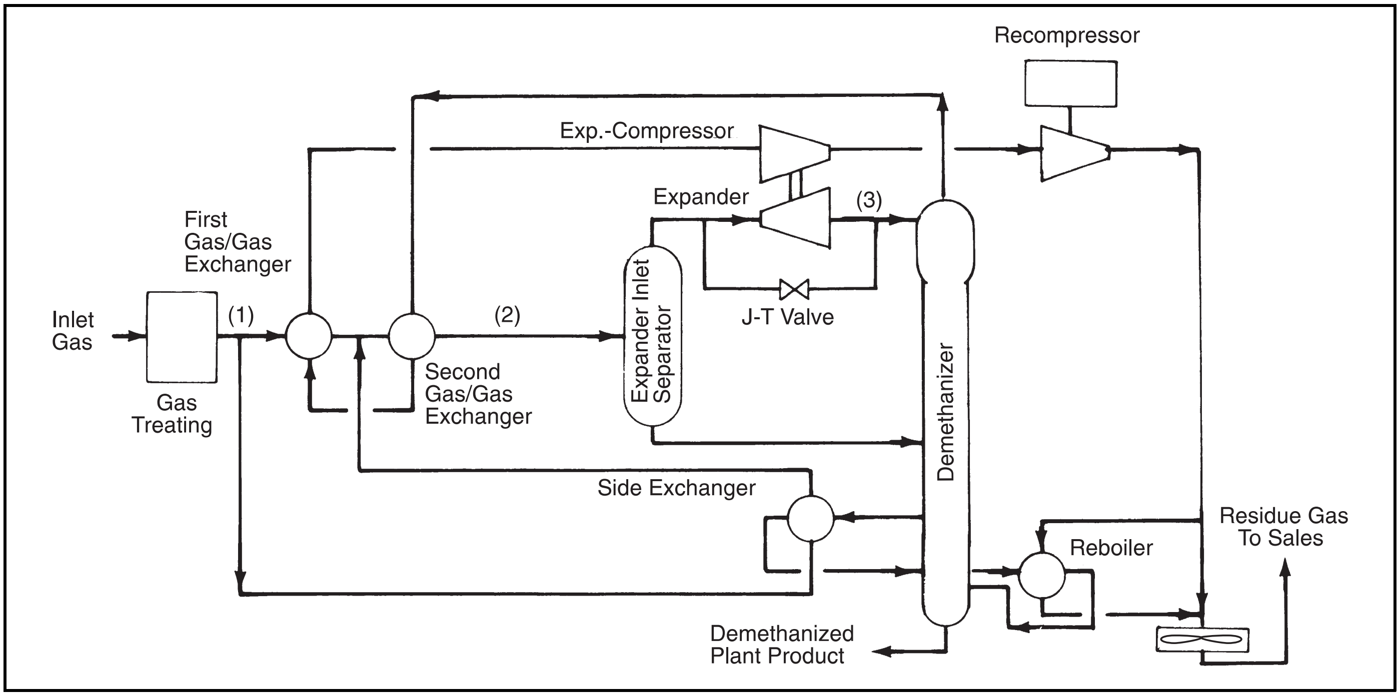

Also, because the path to Point 4 is adiabatic without the gas doing work, the gas does not cool to as low a temperature as the path to Point 3. That is, the path (2) to (3) is isentropic expansion producing work and thereby cooling the gas more than the simple isentropic expansion path.

The higher temperature results in a reduction of product recovery. The use of the expander brake compressor to boost the residue gas pressure will allow a lower expansion pressure without the use of more residue compression.

FIG. 13-69

Pressure-Temperature Diagram for Expander Process

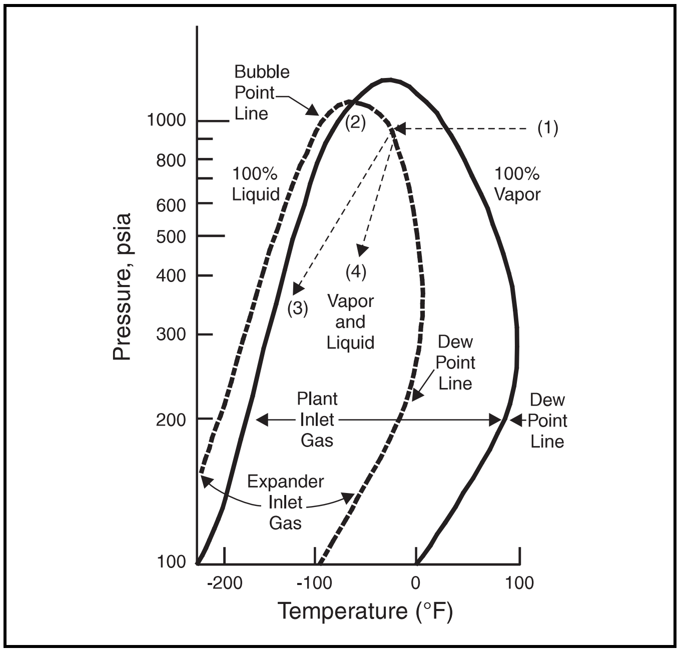

THERMODYNAMICS

A turboexpander recovers useful work from the expansion of a gas stream. The process operates isentropically in the ideal case and produces something less than the theoretical work in the real case. In the process of producing work, the expander lowers the bulk stream temperature which can result in partial liquefaction of the bulk stream. A simple schematic of an expander is given in Fig. 13-70.

An example calculation of an expander operating in a natural gas plant follows. The GPSA method is a hand calculation process which relies on various K-value and thermodynamic property charts available in the GPSA Data Book. Due to the limits of accuracy in reading these charts, it is impossible to duplicate all of the numbers in the example problem in spite of using each time the same step-by-step method. For all intent and purposes, the example calculation can be regarded as sufficiently correct with a discrepancy of less than 3% for the final result of the expander horsepower.

A simplified 3-component mixture will be used, as the example is general for all mixtures. The example involves the use of the K-value charts (see Section 25) and the calculation of stream enthalpies and entropies.

Thermodynamic properties are taken from Section 24. K-values are calculated from the data on the binary systems methane-ethane, and methane-propane, and the infinite dilution ternary system.

Gas inlet conditions (t_1, P_1) to the expander are generally set by process balances. The outlet pressure P_2 from the expander is set by process and recompressor power considerations. Fig. 13-61 gives stream conditions with an example calculation.

Outlet conditions for the expander must be determined by trial-and-error calculations. Assume three different outlet temperatures, t′, t″, t‴ at the set outlet pressure of P_2 [2000 kPa (abs)], from the expander. At each assumed temperature and P_2, calculate the equilibrium conditions of the bulk stream from the expander, and determine the stream bulk enthalpy (h) and entropy (s).

For most natural gas applications, including this example, a limiting boundary value for the outlet temperature can be obtained from the methane P-H diagram. From this chart, determine the ideal outlet temperature t_2 by isentropic expansion from inlet t_1, P_1 to outlet P_2. In most real gas mixtures, t_2 will be somewhat warmer than this. In the example case, t_2 for pure methane is –159°F. Therefore, assume t′ = –150°F, t″ = –140°F, t‴ = –130°F.

Draw a plot of $\Delta h(h_{t1P1} - h_{t2P2})$ versus temperature at P_2, and s versus outlet temperature at P_2, using stream bulk properties as calculated in Fig. 13-71. This plot is illustrated in Fig. 13-72.

From the plot of the calculated s versus outlet temperature at P_2 (300 psia), determine the isentropic outlet temperature, using s_1 (32.58) from the inlet conditions. From this outlet temperature, read the corresponding Δh ideal, which is the ideal work available from a 100% efficient isentropic process. Since the expander operates at something less than ideal conditions, an efficiency must be used to determine actual expander outlet conditions. If an expander efficiency of 80% is used, the actual $\Delta h = 0.8 \times \Delta h$ ideal $= \Delta h_A$. Using Δh_A from the plot, read an outlet temperature of t_2 (–135.2°F). Now make an equilibrium flash calculation at conditions t_2, P_2 –135.2°F, (300 psia) to find the real outlet conditions for the expander, operating at 80% efficiency.

The total work produced by the expander based on the assumed efficiency can be calculated as shown in Fig. 13-71.

A schematic P-H diagram path for the example expander calculation is shown in Fig. 13-73.

FIG. 13-70

Simple Expander

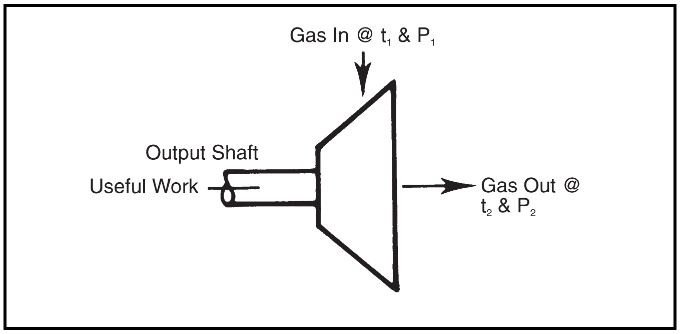

FIG. 13-71

Expander Example Calculation

Flow: 60 MMscfd

t_1 = –60°F

P_1 = 900 psia

P_2 = 300 psia

	mols/hr
Methane	6,185.8
Ethane	263.5
Propane	138.3
Total mols/hr	6,587.6
Total lbs/hr	113,261.0

Inlet Conditions:

All enthalpies (h) are calculated from Figs. 24-3, 24-6, and 24-7, and all entropies (s) from Figs. 24-18, 24-19, and 24-20. See Fig. 24-17 for example calculation of h and Fig. 24-2 for example calculation of s.

Inlet Enthalpy, (h)	118.134 Btu/lb
Inlet Entropy, (s)	32.58 Btu/(mol • °R)

Outlet Conditions

	-150°F 300 psia	-140°F 300 psia	-130°F 300 psia
K-value for methane	1.1589	1.3680	1.6023
K-value for ethane	0.0813	0.0948	0.1127
K-value for propane	0.00974	0.01022	0.01235
Outlet liquid, lbs/hr	48,380	23,958	15,720
Outlet vapor, lbs/hr	64,882	89,303	97,541
Outlet liquid enthalpy (h) Btu/lb	–53.202	–68.675	–77.500
Outlet vapor enthalpy (h) Btu/lb	120.702	127.901	134.301
Outlet liquid entropy (s) Btu/(mol • °R)	25.557	25.916	26.220
Outlet vapor entropy (s) Btu/(mol • °R)	33.172	33.688	34.147
Mixture h, Btu/lb	46.419	86.319	104.904
Mixture s, Btu/(mol • °R)	30.198	32.383	33.366
h inlet – h outlet = Δ h, Btu/lb	71.715	31.815	13.230

See Fig. 13-72

Δ h ideal = 27.688 Btu/lb
Δ h actual = 0.8 efficiency x 27.688 = 22.150 Btu/lb
t_2 at 80% expander efficiency = –135.2°F @ 300 psia.

Flash @ Actual Outlet Conditions:

	K at –135.2°F 300 psia	Liquid	Vapor
Methane	1.4726	567	5,619
Ethane	0.1019	156	107
Propane	0.0104	129	9
Total mols/hr		852	5,735
Total lbs/hr		19,477	93,784

Work produced = 22.150 Btu/lb x 113,261 lb/hr = 2,509,000 Btu/hr

Horsepower = 2,509,000 ÷ 2,545 = 986 hp

In many applications the loading device for the turboexpander is a centrifugal compressor and its performance can be calculated as shown in this section. Shaft and bearing losses in the order of 2% are usually deducted to calculate net power input to the driven end from the expander.

FIG. 13-72

T-h and T-s Diagram

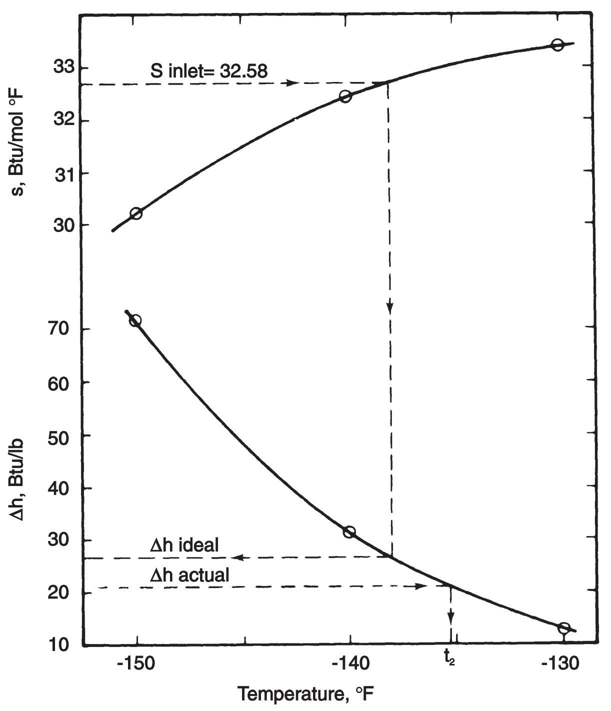

FIG. 13-73

Schematic P-H Diagram for Expander

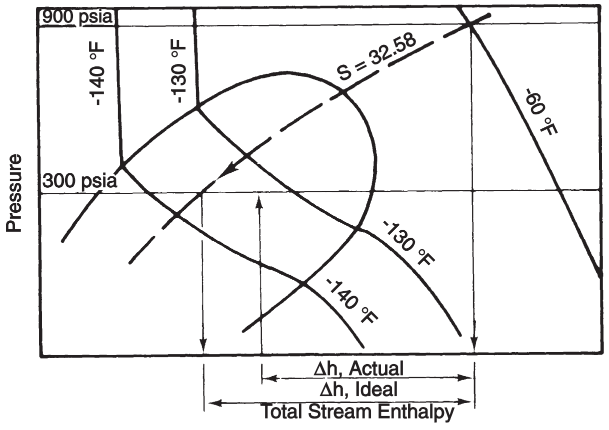

MECHANICAL

Mechanical design of the turboexpander is the business of several manufacturers. Any specific information must come from such supplier.

Of the various general turbine types available, the radial reaction turbine design is dominant in cryogenic turboexpander natural gas plant applications. These units operate over wide ranges of inlet flow and pressure conditions, by utilizing variable inlet guide vanes. They operate at very high rotating speeds and thus are subject to the design and operating cautions common to similar sophisticated rotating equipment.

The most common configuration is a turboexpander-compressor where the expander power is used to compress gas in the process. In this case, the compressor wheel operates on the same shaft as the expander wheel. Other applications of the power recovery are expander-pump or expander-generator drives. These normally require gearing to reduce the expander speed to that required for the driven unit.

Since power recovery and refrigeration effect are primary benefits of expander applications, rotating speeds are set to optimize the expander efficiency. This will usually result in a compromise in the compressor end design and lower compressor efficiencies. Usual efficiencies quoted for radial type units are 75 to 85% for the expander and 65 to 80% for the compressor.

Some areas requiring extra attention in the installation of turboexpanders are listed below. The list is by no means comprehensive, but these items require more than the normal amount of concern in designing the installation of a turboexpander unit for cryogenic operation.

1. The expander inlet gas stream must be free of solid or liquid entrainment. Liquids are removed in a high pressure separator vessel. An inlet screen of fine mesh is usually required for solids removal. Monitoring of the pressure drop across this screen is recommended. Formation of solids (ice, carbon dioxide, amines, heavy oils) will often occur here first and can be detected by an increase in pressure drop across the screen.
2. Source of the seal gas, particularly during start-up, is an important consideration. The stream must be clean, dry, sweet, and of sufficient pressure to meet the system requirements.
3. Normally a quick closure shutoff valve is required on the expander inlet. Selection of this valve and actuator type must take into account start-up, operating, and shutdown conditions.
4. Vibration detection instrumentation is useful but not mandatory. Its application is normally an owner and vendor option and influenced by operating economics.
5. Loading of the flanges by the process piping system must be within prescribed limits to avoid distortion of the case, resulting in bearing or wheel rubbing problems.
6. Failures due to mechanical resonance have occurred in turboexpanders. Even though the manufacturer will exert his best efforts at the manufacturing stage to avoid this problem, in-plant operation may uncover an undesirable resonance. This must be solved in conjunction with the manufacturer and may involve a redesign of the wheels, bearing modifications, vane or diffuser redesign, etc.

The installation of a turboexpander-compressor unit also requires the proper design of a lube system, instrumentation, etc., in common with other industrial rotating equipment. It is common practice to install a turboexpander-compressor with no special anti-surge instrumentation for the compressor unit. This is acceptable if it can be determined that the gas flow through the compressor is balanced with flow through the expander and the two will vary simultaneously.

Auxiliary Systems

Both lubricated and non-lubricated turboexpander designs are available.

Lubrication System — The lubrication system circulates cooled and filtered lube oils to the turboexpander bearings as shown on Fig. 13-74. The principle components of the system are monitored on the lube console and normally consist of two electric motor-driven lube oil pumps, an oil cooler, a dual filter valve, a bladder type with switching coastdown accumulator, and a pressurized reservoir with mist eliminator.

The lube oil pumps (one stand-by) must maintain a constant flow to the radial and thrust bearings. Absence of oil, or improper filtration, can cause bearing damage. Most manufacturers recommend a light turbine oil (315 SSU at 100°F) for best machine performance.

The lube oil cooler is an integral part of the system to reject heat that is generated across the bearings. It can be of a fan air cooled type or shell and tube design, water cooled. If the cooling water is scale forming, duplicate coolers (one stand-by) are recommended.

FIG. 13-74

Lube Oil Schematic

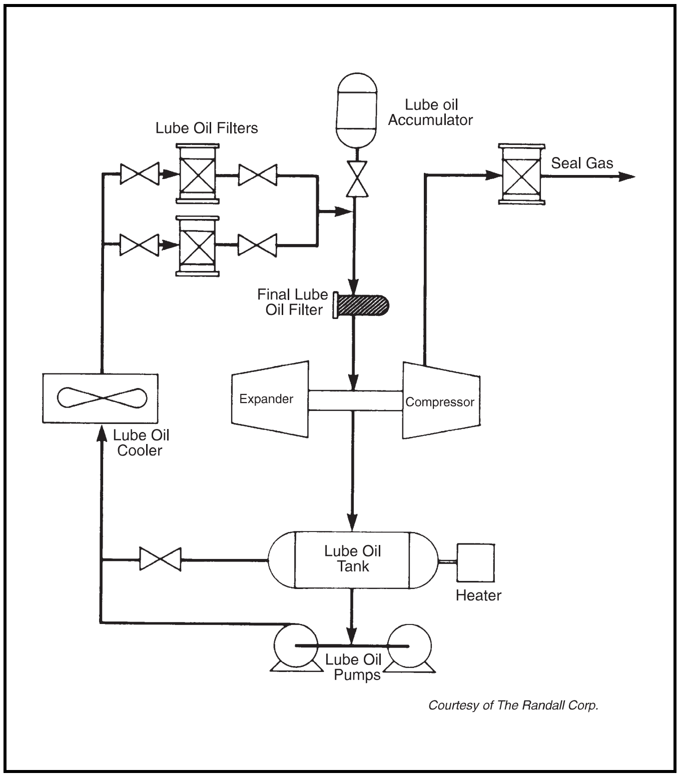

Courtesy of The Randall Corp.

Lube oil filtration is extremely important due to close tolerances between bearing surfaces.

The lube-oil reservoir serves as a surge tank to enhance pump suction as well as to serve as a degassing drum permitting process seal gas to be released from the oil. If necessary, the reservoir should be equipped with a heater to bring the oil up to temperature for a "cold" start.

Seal Gas System — The seal gas system prevents loss of process gas and assures protection against entry of lube oil into process gas areas. To accomplish this, a stream of "seal gas" is injected into each labyrinth shaft seal at a pressure higher than that of the process gas. The leaking seal gas is collected in the oil reservoir, then returned through a mist eliminator to the fuel gas system, or put back into the compressor suction end.

The system for seal gas injection consists of a liquid collector, electric heater (if required), twin filters, and differential pressure regulators.

If recompression is necessary for the gas processing plant, sales gas is ideal for use as seal gas. If no recompression is provided, a stream can be taken from the expander inlet separator, warmed and used as seal gas. A minimum seal gas temperature (about 70°F) is required to prevent oil thickening.

Seal gas filtration is essential because of close clearances provided between the shaft and seals.

Seal gas flow requirements are determined by the expander manufacturers as a part of their performance rating.

Control Systems

Process — Control of the process streams begins with proper dehydration and filtering. Generally a final protective screen upstream of the expander is designed into the piping system to form a protective barrier against carbon dioxide or water freezing.

As a further protection against water freezing, methanol injection connections are incorporated into the system upstream of the expander.

Machine — The expander speed is established by the manufacturer, given the process conditions. For maximum efficiency, the expander manufacturer determines the wheel diameter and specific speed.

As plant operating conditions change, the expander speed may change. Fig. 13-75 shows the change in efficiency as a function of change in design flow rate.

Gas entering the expander is directed by adjustable nozzles into the impeller. About one-half of the pressure drop across the expander takes place in the nozzles, imparting kinetic energy to the gas which is converted to shaft horsepower by the expander wheel. Pressure reductions are normally limited to 3-4 ratios. Greater ratios reduce expander efficiency to the extent that 2-stage expansion may be advisable.

The adjustable nozzles function as pressure control valves. A pneumatic operator takes a split range signal (3 to 9 psi) to stroke the nozzles. On increasing flow beyond the full open nozzle position, a 9 to 15 psi signal from a pressure controller opens a bypass control valve. This valve is called the J-T (Joule-Thomson) valve.

Thrust bearing force imbalance is caused by difference in pressures between the expander discharge and compressor suction. With a differential of the order of 20 psi, the thrust loads are usually within the capabilities of the thrust bearings. At higher pressure differentials, it is essential that steps be taken to control the thrust loads against each other, thereby the net thrust load will not exceed the thrust bearing capacity.

FIG. 13-75

Example Change in Efficiency with Flow Rate

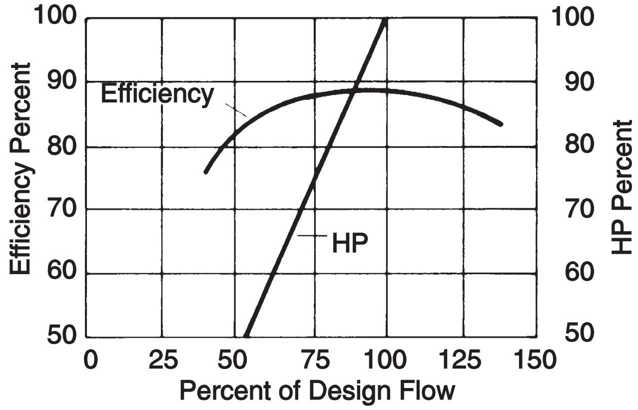

Courtesy of The Randall Corp.

This is done by providing a force-measuring load-meter on each thrust bearing, Fig. 13-76, and a thrust control valve which controls the thrust by control of pressure behind the thrust balancing drums or behind one of the seals. These two load-meters indicate thrust bearing oil film pressure (proportional to bearing load) and the third shows the pressure behind the balancing drum as controlled by the valve in its vent as a means of adjusting the thrust load.

Vibration comes from an unbalanced force on one of the rotating components, or it could come from an outside source such as pipe vibration or gas pulsation.

Most expanders are supplied with monitoring and shutdown devices for shaft vibration. These devices are set to shut down the expander before damage occurs.

Lube Oil — The lube oil must be filtered. Most systems use a primary and secondary filtering system. Controls are provided to ensure oil flow to bearings at proper pressure and temperature. Two (2) lube oil pumps are furnished, the second pump serving as a standby. The standby oil pump is controlled automatically to cut in to provide oil pressure upon failure of the main pump or reduction in pressure for other reasons.

Generally an oil flow bypass valve is included to permit excess flow to bypass the expander bearings and return to the reservoir.

For temperature control, the oil must be cooled to prohibit heat buildup which occurs through the bearings. Also, a temperature control bypass is included in the circuit for an extra measure of control to keep the oil from getting too cool.

Seal Gas — Use a suitable gas stream with filtering and pressure control to maintain proper gas pressure at the shaft seals.

FIG. 13-76

Typical Expander/Compressor Cross-Section with Thrust Balancing Schematic

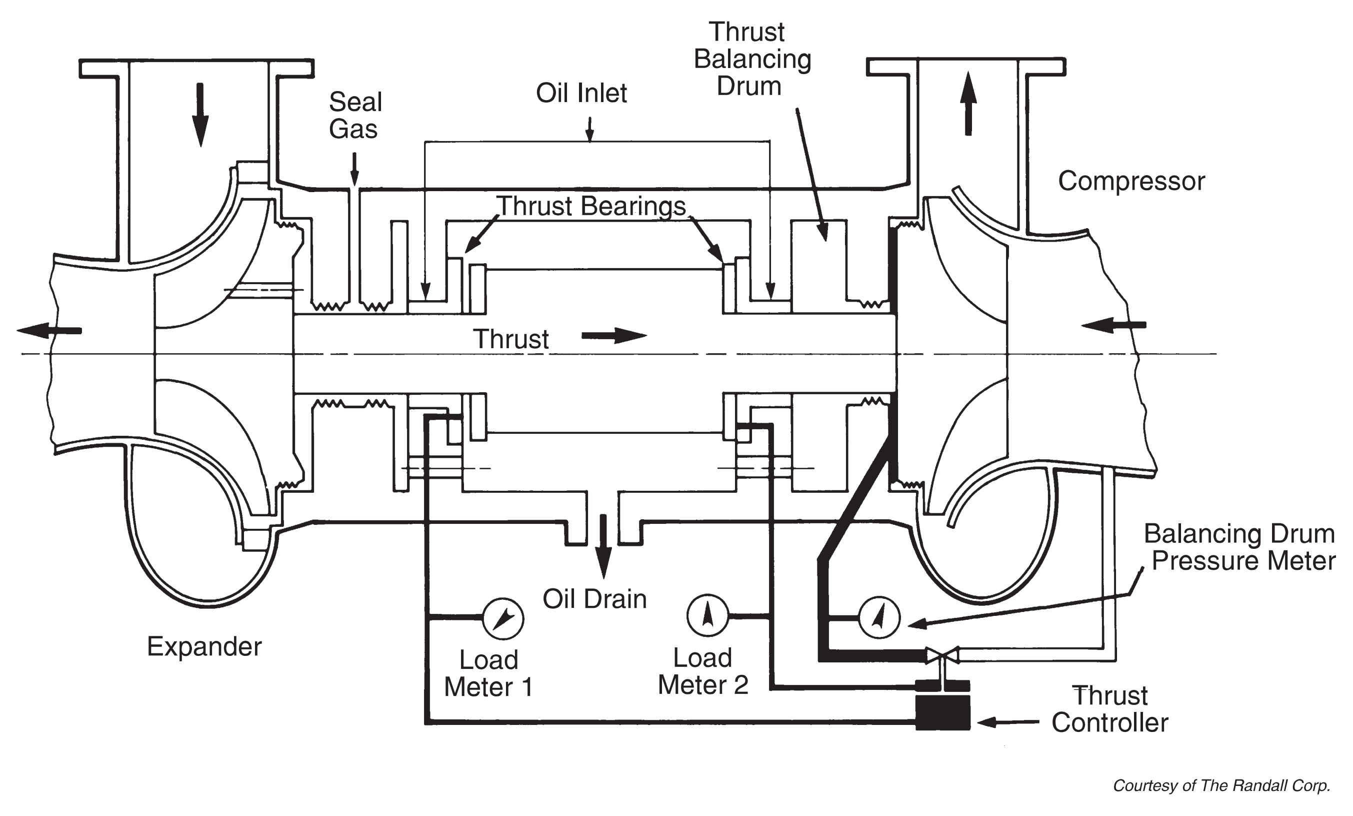

Courtesy of The Randall Corp.

If the seal gas is delivered from a cold supply point (expander inlet separator) then a means of heating the gas is necessary.

The seal gas should be introduced before the lube oil system is started because there might be a pressure upset which would put enough oil into the process to cause a problem.

Each of the main rotating components (radial bearings, thrust bearings, and shaft seals) can be damaged or eroded by improper oil filtration, lack of oil flow, improper gas dehydration, and improper seal gas filtration.

Shutdown — A number of conditions during the operation of expanders justify prompt shutdown to avoid serious damage.

Some of these conditions are:

- High Vibration
- Low Lube Oil Flow
- High Inlet Separator Level
- High Inlet Screen Pressure Drops
- High Thrust
- High Lube Oil Temperature
- Low Lube Oil Pressure
- High Speed

Two primary actions of a shutdown signal are to block gas flow to the expander and the compressor. This is accomplished by actuating quick acting shutdown valves at the expander inlet and outlet and the compressor inlet. Simultaneously, a pressurized bladder supplies oil to the bearings during the expander coast down. The expander bypass valve (J-T) opens automatically and is positioned by the split-range pressure controlled to keep the plant on-line in the J-T mode.

Field Performance — Field measurements can be made to check efficiencies and horsepower of the expander. The process of calculations is just the reverse of selecting a machine performance.

Knowing the gas composition, mass flow (lbs/hr), inlet and outlet conditions (pressure, temperature) for the expander, the actual difference in enthalpy can be determined for each unit.

Thus: $$\Delta h_{actual} = h_{t_2P_2} - h_{t_1P_1}$$

$$\eta = \frac{\Delta h \text{ actual}}{\Delta h \text{ ideal}}$$

$$EP_{actual} = \frac{\Delta h \text{ actual} \bullet \text{lbs/hr}}{2{,}545}$$

REFERENCE

1. ISR MECHANALYSIS, INC., 6150 Huntley Road, Columbus, Ohio 43229.

BIBLIOGRAPHY

1. American Petroleum Institute Standards:

API 11P - "Specifications for Packaged Reciprocating Compressors for Oil and Gas Productive Services."

API 614 - “Lubrication, Shaft-Sealing and Control Oil Systems for Special-Purpose Applications”.

API 617 - “Axial and Centrifugal Compressors and Expander Compressors for Petroleum, Chemical and Gas Industry Services."

API 618 - “Reciprocating Compressors for General Refinery Services”.

API 619 - "Rotary Type Positive Displacement Compressors for Petroleum, Chemical and Gas Industry Services."

API 670 - “Non-Contacting Vibration and Axial Position Monitoring System”.

API 678 - “Accelerometer Based Vibration Monitoring Systems”.

2. Bergmann, D./Mafi, S., “Selection Guide for Expansion Turbines,” Hydrocarbon Processing, Aug. 1979.
3. Brown, R. N., “Control Systems for Centrifugal Gas Compressors,” Chemical Engineering, Feb. 1964.
4. Criqui, A. F., “Rotor Dynamics of Centrifugal Compressors,” Solar Turbines International, San Jose, California.
5. Gibbs, C. W., “Compressed Air and Gas Data,” Ingersoll Rand Co.
6. Neerken, R. F. “Compressor Selection for the Process Industries,” Chemical Engineering, Jan. 1975.
7. Perry, R. H./Chilton, C. H., “Chemical Engineers Handbook,” Fifth Edition, Section 6, McGraw-Hill Book Co., Inc., New York, New York.
8. Reid, C. P., “Application of Transducers to Rotating Machinery Monitoring and Analysis,” Noise Control and Vibration Reduction, Jan. 1975.
9. Scheel, L. F., “Gas and Air Compression Machinery,” McGraw-Hill Book Co., Inc., New York, New York.
10. Swearingen, J. S., “Turboexpanders and Expansion Processes for Industrial Gas,” Rotoflow Corp., Los Angeles, California.
11. Bloch, Heinz P., "A Practical Guide to Compressor Technology," McGraw-Hill Book Co., Inc., New York, New York.

NOTES

SECTION 14

Refrigeration

Refrigeration systems are common in the natural gas processing industry and processes related to the petroleum refining, petrochemical, and chemical industries. Several applications for refrigeration include NGL recovery, LPG recovery, hydrocarbon dew point control, reflux condensation for light hydrocarbon fractionators, and LNG plants.

Selection of a refrigerant is generally based upon temperature requirements, availability, economics, and previous experience. For instance, in a natural gas processing plant, ethane and propane may be at hand; whereas in an olefins plant, ethylene and propylene are readily available. Propane or propylene may not be suitable in an ammonia plant because of the

FIG. 14-1

Nomenclature

GHP = gas horsepower defined by Eq 14-7b
h = enthalpy, Btu/lb
h'_{VD} = isentropic enthalpy, Btu/lb
k = specific heat ratio
m = refrigerant flow, lb/hr
n = number of stages
P = pressure, psia
Q = heat duty, Btu/hr
r = compression ratio
S = entropy, Btu/(lb • °R)
T = temperature, °F
W = work of compression, Btu/hr
X = weight fraction
η = isentropic efficiency
σ = surface tension, dynes/cm
ρ = density, lb/ft^3
Δh = enthalpy change, Btu/lb

Subscripts

L = liquid state
V = vapor state
A, B, C, D = denote unique points of operation on P-H diagrams
b = bypass
i = isentropic
cd = condenser
ref = refrigeration
s = suction
d = discharge
n = stage number
T = Total
1, 2 = stage number

Accumulator: a storage vessel for liquid refrigerant; also known as surge drum.

Bubble point: the temperature at which the vapor pressure of the liquid refrigerant equals the absolute external pressure of the liquid-vapor interface.

Capacity, refrigerating system: the cooling effect produced by the total enthalpy change between the refrigerant entering the evaporator and the refrigerant leaving the evaporator.

Chiller, Evaporator: a heat exchanger in which the liquid refrigerant is vaporized by a process stream which is in turn cooled.

Compression ratio: ratio of outlet to inlet absolute pressures for a compressor.

Condenser: a heat exchanger in which the refrigerant, compressed to a suitable pressure, is condensed by rejection of heat to a cooling medium.

Cooling medium: any substance whose temperature is such that it is used, with or without change of state, to lower the temperature of refrigerant either during condensing or subcooling.

Effect, refrigerating: the rate of heat removal by a refrigerant in a refrigeration system. It is equal to the difference in specific enthalpies of the refrigerant at two designated thermodynamic states.

Expansion valve: a valve for controlling the flow of refrigerant to an evaporator or chiller.

Flash gas: the gas resulting from the instantaneous evaporation of refrigerant by a pressure reducing device, such as a control valve.

Frost Plug: small diameter closed nozzle protruding from the side of an insulated vessel which indicates liquid level in the vessel by accumulation of frost.

Halocarbons: a family of refrigerants consisting of fluorinated and/or chlorinated hydrocarbons.

Hot gas bypass: warm discharge gas recycled to chiller for maintaining system's operating integrity at minimum load conditions.

Liquid refrigerant receiver: a vessel in a refrigeration system designed to ensure the availability of adequate liquid refrigerant for proper functioning of the system and to store the liquid refrigerant when the system is pumped down.

Refrigerant: the fluid used for heat transfer in a refrigeration system, which absorbs heat at a low temperature and low pressure and rejects heat at a higher temperature and a higher pressure.

Ton of refrigeration: amount of heat required to melt 1 ton of ice in 24 hours, equivalent to 12,000 Btu/hr at 32°F.

risk of contamination, while ammonia may very well serve the purpose. Halocarbons have been used extensively because of their nonflammable characteristics.

Fig. 14-1 provides a nomenclature and glossary for this section.

MECHANICAL REFRIGERATION

Refrigeration Cycle

The refrigeration effect can be achieved by using one of these cycles:

- Vapor compression-expansion
- Absorption
- Steam jet (water-vapor compression)

By utilizing the Pressure-Enthalpy (P-H) diagram, the refrigeration cycle can be broken down into four distinct steps:

- Expansion
- Evaporation
- Compression
- Condensation

The vapor-compression refrigeration cycle can be represented by the process flow and P-H diagram shown in Fig. 14-2.

Expansion Step — The starting point in a refrigeration cycle is the availability of liquid refrigerant. Point A in Fig. 14-2 represents a bubble point liquid at its saturation pressure, P_A, and enthalpy, h_{LA}. In the expansion step, the pressure and temperature are reduced by flashing the liquid through a control valve to pressure P_B. The lower pressure, P_B, is determined by the desired refrigerant temperature, T_B (point B).

At point B the enthalpy of the saturated liquid is h_{LB}, while the corresponding saturated vapor enthalpy is h_{VB}. Since the expansion step (A – B) occurs across an expansion valve and no energy has been exchanged, the process is considered to be isenthalpic. Thus the total stream enthalpy at the outlet of the valve is the same as the inlet, h_{LA}.

Since point B is inside the envelope, vapor and liquid coexist. In order to determine the amount of vapor formed in the expansion process, let X be the fraction of liquid at pressure P_B with an enthalpy h_{LB}. The fraction of vapor formed during the expansion process with an enthalpy h_{VB} is (1-X). Equations for the heat balance and the fraction of liquid formed are:

$$(X)\, h_{LB} + (1 - X)\, h_{VB} = h_{LA} \qquad \textbf{Eq 14-1}$$

$$X = \frac{(h_{VB} - h_{LA})}{(h_{VB} - h_{LB})} \qquad \textbf{Eq 14-2}$$

$$(1 - X) = \frac{(h_{LA} - h_{LB})}{(h_{VB} - h_{LB})} \qquad \textbf{Eq 14-3}$$

Evaporation Step — The vapor formed in the expansion process (A-B) does not provide any refrigeration to the process. Heat is absorbed from the process by the evaporation of the liquid portion of the refrigerant. As shown in Fig. 14-2, this is a constant temperature, constant pressure step (B-C). The enthalpy of the vapor at point C is h_{VB}.

FIG. 14-2

Process Flow Diagram and Pressure-Enthalpy Diagram

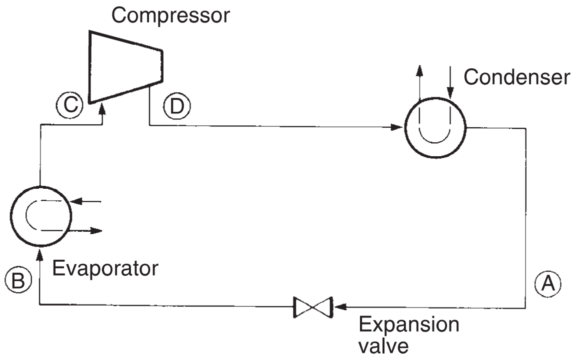

Process Flow Diagram

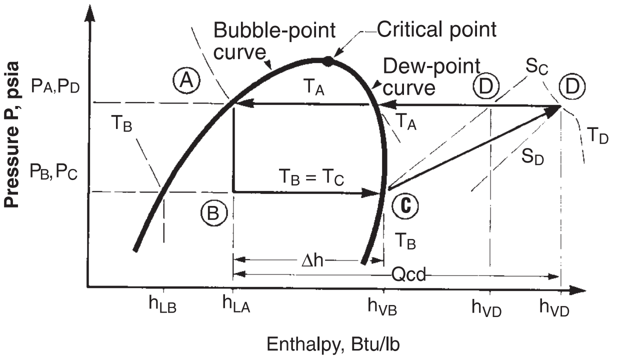

Pressure Enthalpy Diagram

Physically, the evaporation takes place in a heat exchanger referred to as an evaporator or a chiller. The process refrigeration is provided by the cold liquid, X, and its refrigerant effect can be defined as X ($h_{VB} - h_{LB}$) and substituting from Eq. 14-2, the effect becomes:

$$\text{Effect} = h_{VB} - h_{LA} \qquad \textbf{Eq 14-4}$$

The refrigeration duty (or refrigeration capacity) refers to the total amount of heat absorbed in the chiller by the process, generally expressed as "tons of refrigeration," or Btu/unit time. The refrigerant flow rate is given by:

$$m = \frac{Q_{ref}}{(h_{VB} - h_{LA})} \qquad \textbf{Eq 14-5}$$

Compression Step — The refrigerant vapors leave the chiller at the saturation pressure P_C. The corresponding temperature equals T_C at an enthalpy of h_{VB}. The entropy at this point is S_C. These vapors are compressed isentropically to pressure P_A along line C – D′ (Fig. 14-2).

The isentropic (ideal) work, W_i, for compressing the refrigerant from P_B to P_A is given by:

$$W_i = m\,(h'_{VD} - h_{VB}) \qquad \textbf{Eq 14-6}$$

The quantity h'_{VD} is determined from refrigerant properties at P_A and an entropy of S_C. Since the refrigerant is not an ideal fluid and since the compressors for such services do not operate ideally, isentropic efficiency, η_i, has been defined to compensate for the inefficiencies of the compression process. The actual work of compression, W, can be calculated from:

$$W = \frac{W_i}{\eta_i} = \frac{m\,(h'_{VD} - h_{VB})}{\eta_i} = m\,(h_{VD} - h_{VB}) \qquad \textbf{Eq 14-7}$$

The enthalpy at discharge is given by:

$$h_{VD} = \frac{(h'_{VD} - h_{VB})}{\eta_i} + h_{VB} \qquad \textbf{Eq 14-7a}$$

The work of compression can also be expressed as:

$$GHP = \frac{W}{2544.4} \qquad \textbf{Eq 14-7b}$$

where 2544.4 Btu/hr = 1 hp.

(See Section 13 for a discussion on compressors.)

Condensation Step — The superheated refrigerant leaving the compressor at P_A and T_D (Point D in Fig. 14-2) is cooled at nearly constant pressure to the dew point temperature, T_A, and refrigerant vapors begin to condense at constant temperature.

During the desuperheating and condensation process, all heat and work added to the refrigerant during the evaporation and compression processes must be removed so that the cycle can be completed by reaching Point A (the starting point) on the P-H diagram, as shown in Fig. 14-2.

By adding the refrigeration duty to the heat of compression, we calculate the condensing duty, Q_{cd}, from:

$$Q_{cd} = m\,[(h_{VB} - h_{LA}) + (h_{VD} - h_{VB})]$$

$$= m\,(h_{VD} - h_{LA}) \qquad \textbf{Eq 14-8}$$

The condensing pressure of the refrigerant is a function of the cooling medium available — air, cooling water, or another refrigerant. The cooling medium is the heat sink for the refrigeration cycle.

Because the compressor discharge vapor is superheated, the refrigerant condensing curve is not a straight line. It is a combination of desuperheating and constant temperature condensing. This fact must be considered for proper design of the condenser.

System Pressure Drop — Some typical values for pressure drops that must be considered are:

Condenser pressure drop	3.0 to 7.0 psi
Line hydraulic losses	
Evaporator to Compressor*	0.1 to 1.5 psi
Compressor to Condenser	1.0 to 2.0 psi
Condenser to Receiver	0.5 to 1.0 psi

* This is an important consideration in refrigeration services with low suction pressure to compressor.

Refrigeration Stages

Refrigeration systems utilizing one, two, three, or four stages of compression have been successfully operated in various services. The number of levels of refrigeration generally depends upon the number of compression stages required, interstage heat loads, economics, and the type of compression.

One-Stage System — A typical one-stage refrigeration system is shown in Fig. 14-3 where the data are for pure propane refrigerant. Fig. 14-4 illustrates a process application of a single level chiller and the associated cooling curve.

FIG. 14-3

One-Stage Refrigeration System

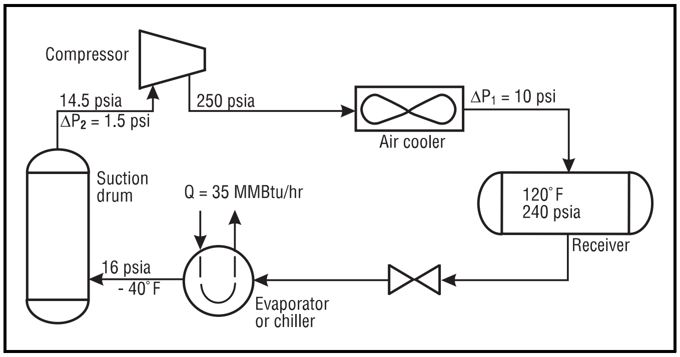

Two-Stage System—Savings in the 20% range can often be achieved with a two-stage refrigeration system and interstage flash economizer. Additional savings can be realized by removing process heat at the interstage level rather than at the low stage level. A typical two-stage system with an intermediate load is shown in Fig. 14-5 with data for pure propane.

Three-Stage System — Additional horsepower savings can be achieved by using a three-stage compression system. As with a two-stage system, flash economization and/or an intermediate heat load can be used. The savings, while not as dramatic as the two stage versus one-stage, can still be significant enough to justify the additional equipment. A typical three stage propane system is shown in Fig. 14-6.

FIG. 14-4

Single-Stage Cooling, Chilling and Heating Curves

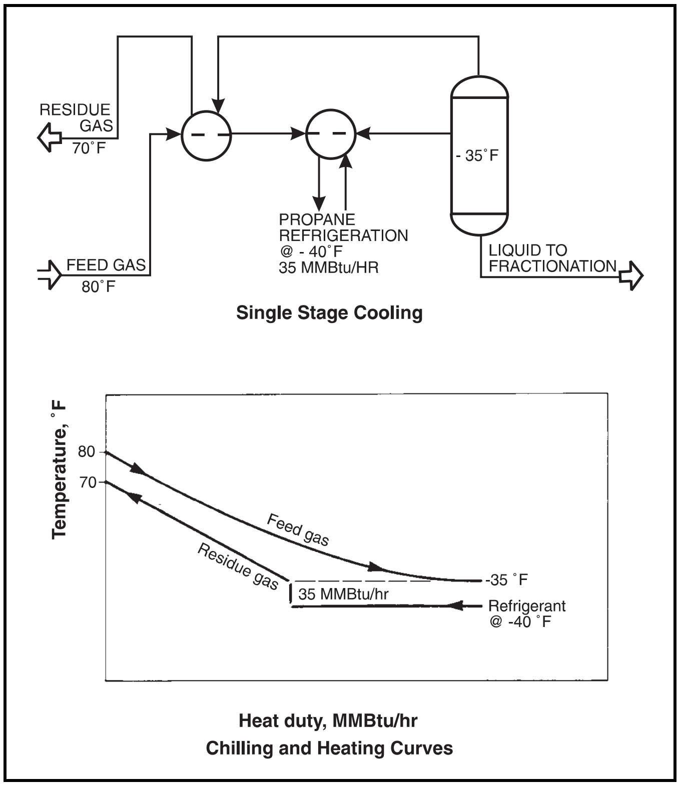

Single Stage Cooling

Chilling and Heating Curves

FIG. 14-5

Two-Stage Refrigeration System

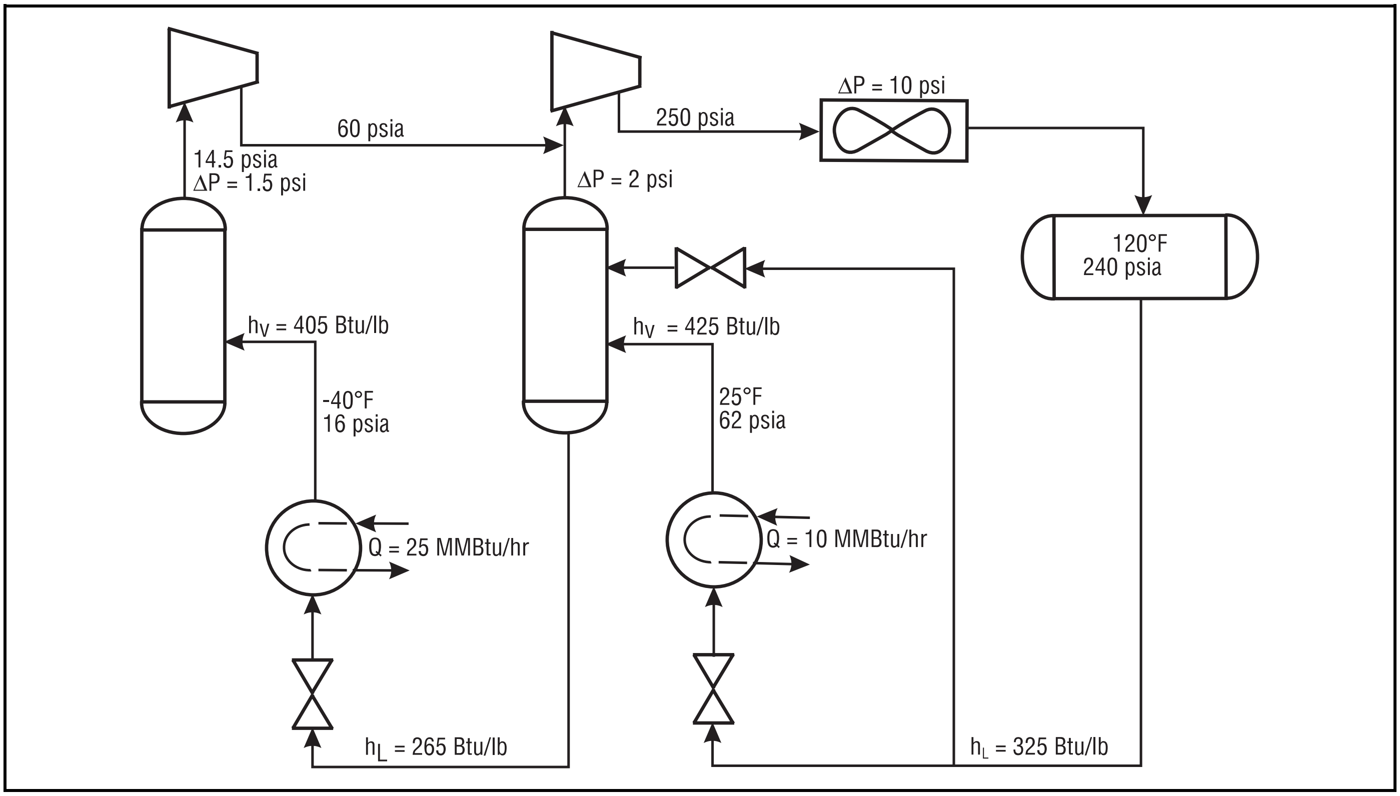

FIG. 14-6

Three-Stage Refrigeration System

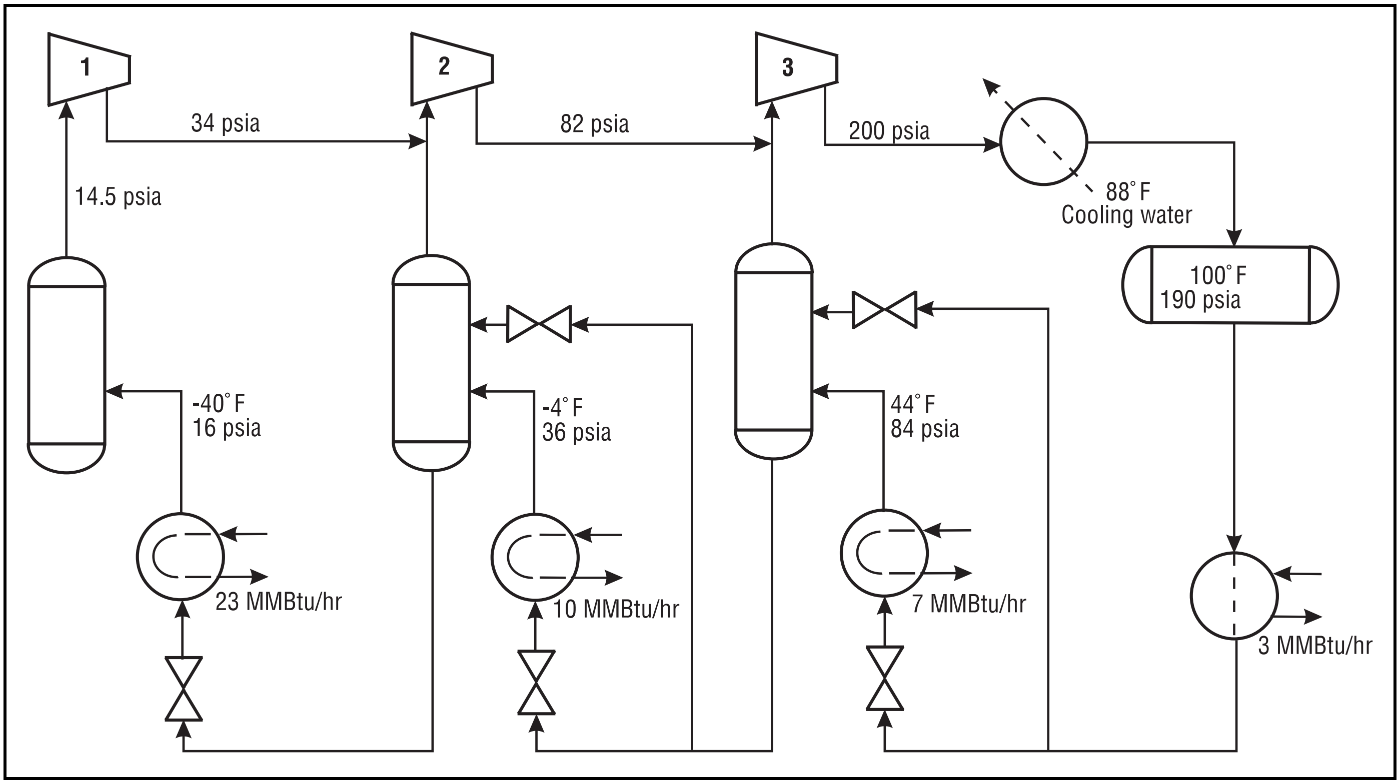

System Configuration — Energy consumption is frequently reduced as the number of stages is increased. For a propane refrigeration system, Fig. 14-7 illustrates the effect of interstages without using refrigeration at intermediate levels. However, the installation cost of such refrigeration systems increases as the number of stages increases. The optimum overall cost will be a function of the specific system and has to be determined for a set of economic criteria.

FIG. 14-7

Effect of Staging on a Propane Refrigeration System

	Stages, n		
	1	2	3
Refrigeration Duty, MMBtu/hr	1.0	1.0	1.0
Refrigeration Temperature, °F	–40	–40	–40
Refrigerant Condensing Temperature, °F	100	100	100
Compression Requirements, hp	292	236	224
Reduction in hp, %	Base	19.2	23.3
Condenser Duty, MMBtu/hr	1.743	1.600	1.575
Change in condenser duty, %	Base	–8.2	–9.6

The compression horsepower for refrigeration can be reduced further by shifting refrigerant load from cooler levels to warmer levels. Fig. 14-8 shows a refrigeration system using two levels of chilling. The gas is initially chilled to 30°F with 25°F propane and then to –35°F with –40°F propane. The selection of the 25°F level results from equal compression ratios for each stage. The interstage pressure and corresponding refrigerant temperature may be fixed by either equipment or process conditions. Equal compression ratios per stage are chosen whenever possible to minimize horsepower.

Example 14-1 — Calculate the horsepower and condenser duty required for the process shown in Fig. 14-8 using propane refrigeration. Design condensing temperature is 120°F. The pressure drop from the chillers to the compressor suction is 1.5 psi. The pressure drop from compressor discharge to the receiver is 10 psi.

Solution Steps:

In order to determine the interstage refrigeration level for a two-stage system, determine the ratio per stage:

$$r = \left(\frac{P_d}{P_s}\right)^{1/n} \qquad \textbf{Eq 14-9}$$

From the propane vapor pressure curve:

$$P_d = 240 \text{ psia} + 10 \text{ psi} = 250 \text{ psia}$$

$$P_s = 16 \text{ psia} - 1.5 \text{ psi} = 14.5 \text{ psia}$$

$$r = \left(\frac{250}{14.5}\right)^{1/2} = 4.15$$

Thus the second stage suction pressure is:

$$P_{s2} = (14.5)(4.15) = 60 \text{ psia}$$

The first stage discharge pressure is:

FIG. 14-8

Two-Level Chilling, Two-Stage Cooling System

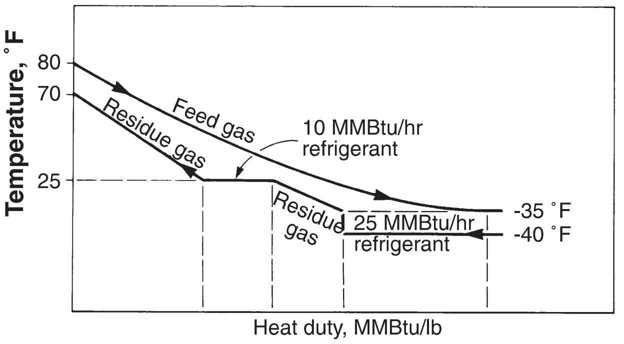

Two-Level Chilling System

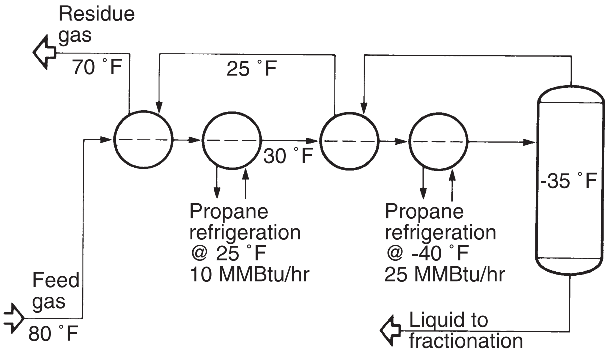

Two-Stage Cooling

$$P_{dl} = 60 + 2.0 = 62 \text{ psia}$$

From the vapor pressure curve for propane, the refrigeration temperature at 62 psia is 25°F. Substituting enthalpy values from Section 24, Fig. 24-27 into Eq 14-5, we find the refrigerant flowrate through each chiller:

$$m_1 = \frac{(25)(10^6)}{(405 - 265)} = 178{,}570 \text{ lb / hr}$$

$$m_2 = \frac{(10)(10^6)}{(425 - 325)} = 100{,}000 \text{ lb / hr}$$

where m_1 is the flowrate through the first stage chiller, and m_2 is the flowrate through the second stage chiller.

Liquid flow to the first-stage chiller (178,570 lb/hr) is provided by flashing the liquid refrigerant from the refrigerant receiver at 120°F and bypassing the second-stage chiller.

In order to determine the flow of liquid refrigerant from the receiver, consider the heat and material balances shown in Fig. 14-9. Here, let m_b (lb/hr) denote the refrigerant bypassing the second-stage chiller. The chiller produces 100,000 lb/hr of refrigerant vapor at 25°F. These vapors flow through the second stage suction drum, and leave overhead. The liquid required from the second stage flash drum for the first stage chiller comes from the quantity m_b.

FIG. 14-9

Data for Heat and Material Balances

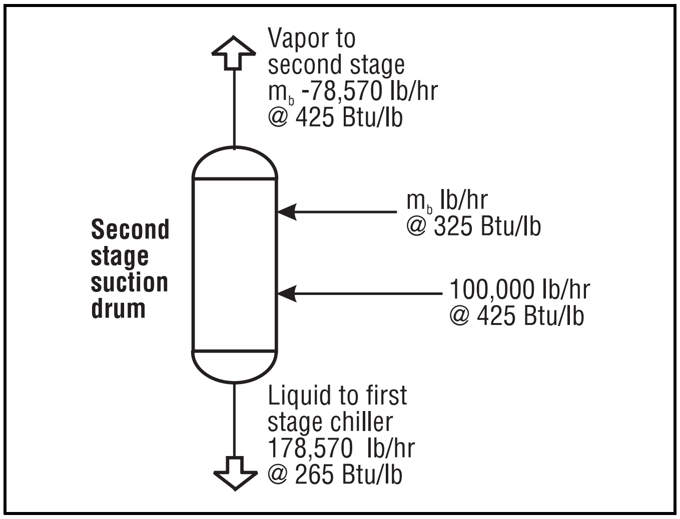

By material balance, we find the vapors leaving the second stage suction drum as m_b + 100,000 – 178,570 or m_b – 78,570 lb/hr. By heat balance around the suction drum, we can determine the amount of refrigerant, m_b:

$$(m_b - 78{,}570)\,(425) + (178{,}570)\,(265) = m_b\,(325) +$$

$$(100{,}000)\,(425)$$

$$m_b = 285{,}712 \text{ lb/hr}$$

In order to calculate isentropic work for the first stage, it is necessary to determine the isentropic enthalpy at 60 psia. Fig. 24-27, the first stage inlet entropy equals 0.93 Btu/(lb•°R), and the corresponding isentropic enthalpy at 60 psia is 440 Btu/lb.

$$\text{The ideal change in enthalpy} = 440 - 410 = 30 \text{ Btu/lb}$$

For propane refrigerant k = 1.13, compression ratio, r, of 4.15 and the isentropic efficiency, η_i of 0.75, the required compression power for the first stage is obtained from Eq 14-7b:

$$GHP_1 = \frac{(30)\,(178{,}570)}{(0.75)\,(2{,}544.4)} = 2807 \text{ hp}$$

Using Eq 14-7a we determine the first stage discharge enthalpy is:

$$h_{v1d} = \frac{30}{0.75} + 410 = 450 \text{ Btu/lb}$$

A material balance around the second compression stage yields the total refrigerant flow:

$$m_T = m_1 + (m_b - 78{,}570) = 178{,}570 + (285{,}712 - 78{,}570)$$

$$= 385{,}712 \text{ lb/hr}$$

A heat balance at the second compression stage entrance yields the second stage inlet enthalpy:

$$h_{v2s} = \frac{(450)\,(178{,}570) + (425)\,(285{,}712 - 78{,}570)}{(385{,}712)}$$

$$= 437 \text{ Btu/lb}$$

From Section 24, the inlet entropy at 60 psia and 437 Btu/lb is 0.93 Btu/(lb • °R), and the isentropic enthalpy at 250 psia is 465 Btu/lb.

Substituting into Eq 14-6, the ideal enthalpy change across the second stage as:

$$\Delta h = 465 - 437 = 28 \text{ Btu/lb}$$

The required compression power for the second stage is determined from Eq 14-7b:

$$GHP_2 = \frac{(28)\,(385{,}712)}{(0.75)\,(2{,}544.4)} = 5659 \text{ hp}$$

Hence, the compression required for the two-stage propane refrigeration system becomes:

$$GHP_T = 2807 + 5659 = 8466 \text{ hp}$$

Using Eq 14-7a, the second stage discharge enthalpy is:

$$H_{V2d} = \frac{28}{0.75} + 437 = 474 \text{ Btu/lb}$$

Substituting into Eq 14-8 yields the condenser duty for the two-stage propane refrigeration system:

$$Q_{cd} = (474 - 325)\,(385{,}712) = 57.5 \text{ MMBtu/hr}$$

From Fig. 24-27 the second stage discharge temperature at 250 psia and enthalpy of 474 Btu/lb is 176°F.

Condensing Temperature

Condensing temperature has a significant effect on the compression horsepower and condensing duty requirements. Mehra[3] illustrated the effect of the condensing temperature on refrigeration requirements for one, two, and three stage systems. Results for a one-stage propylene refrigeration system are summarized in Fig. 14-10.

Fig. 14-10 illustrates that the colder the condensing temperature, the lower the horsepower requirements for a given refrigeration duty. Traditionally, the heat sinks for most refrigeration systems have been either cooling water or ambient air. If cooling water or evaporative condensing is utilized, an 80 to 100°F temperature can be achieved. For most U.S. Gulf Coast locations, a condensing temperature of 115 to 125°F is common when using ambient air for cooling. Section 11 provides wet and dry bulb temperature data for other parts of the United States. Fig. 14-10 also indicates, to a certain extent, the effect on operations between summer and winter conditions as well as between day and night operations.

FIG. 14-10

Effect of Condensing Temperature

Condensing Temperature, °F	60	80	100	120	140
Refrigeration Duty, MMBtu/hr	1.0	1.0	1.0	1.0	1.0
Refrigeration Temperature, °F	–50	–50	–50	–50	–50
Compression Requirement, hp	211	267	333	429	554
Change in hp, %	–36.6	–19.8	Base	28.8	66.4
Condenser Duty, MMBtu/hr	1.54	1.68	1.84	2.09	2.42
Change in Condenser Duty, %	–16.3	–8.7	Base	13.6	31.5

Refrigerant Subcooling

Subcooling liquid refrigerants is common in refrigeration systems. Subcooling the refrigerant reduces the energy requirements. It is carried out when an auxiliary source of cooling is readily available, and the source stream needs to be heated. Subcooling can be accomplished by simply installing a heat exchanger on the appropriate refrigerant and process streams.

Example 14-2 — Consider installing a 3 MMBtu/hr subcooler on the liquid propane refrigerant from the receiver at 120°F in Example 14-1 for the two-stage propane refrigeration system. The second stage of this system is shown in Fig. 14-11.

Solution Steps:

By performing the heat balance around the subcooler and the second stage suction drum, the liquid refrigerant flowrate to the subcooler is determined to be 315,712 lb/hr. When comparing this to the earlier flowrate of 385,712 lb/hr, the refrigerant flow is reduced by 70,000 lb/hr.

By heat balance around the subcooler, we determine the enthalpy of liquid propane refrigerant leaving the subcooler is 315 Btu/lb which corresponds to a temperature of 110°F.

The flowrate of refrigerant through the second stage chiller becomes

$$m_2 = \frac{(10)\,(10^6)}{(425 - 315)} = 90{,}909 \text{ lb/hr}$$

As a result of subcooling, the flow of refrigerant through the second stage chiller has been reduced from 100,000 lb/hr to 90,909 lb/hr. The lower flowrates result in reduced compression horsepower, condenser duty, and reduced size of piping and equipment. These benefits must be balanced against the installed cost of the subcooler exchanger.

FIG. 14-11

Refrigerant Subcooling

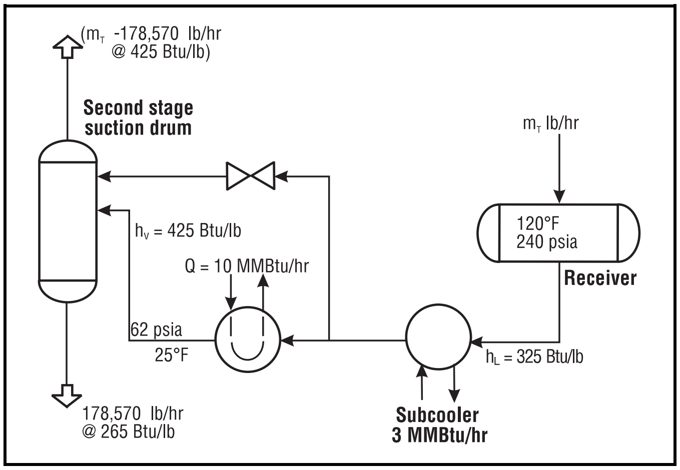

Refrigerant For Reboiling

Refrigerants have been successfully used for reboiling services wherever applicable conditions exist. Reboiling is similar in concept to subcooling — heat is taken out of the refrigeration cycle.

In reboiling service, the heat removed from the refrigerant condenses the refrigerant vapor at essentially constant temperature and pressure. The liquid refrigerant produced in a reboiler service is flashed to the next lower pressure stage to produce useful refrigeration. The refrigerant condensing pressure is a function of the reboiling temperature.

Refrigerant Cascading

In the cascading of refrigerants, warmer refrigerants condense cooler ones. Based on the low temperature requirements of a process, a refrigerant that is capable of providing the desired cold temperature is selected. For example, the lowest attainable temperature from ethane refrigerant is –120°F (for a positive compressor suction pressure), whereas the lowest temperature level for propane is –40°F (for a similar positive pressure).

In a refrigeration cycle, energy is transferred from lower to higher temperature levels economically by using water or ambient air as the ultimate heat sink. If ethane is used as a refrigerant, the warmest temperature level to condense ethane is its critical temperature of about 90°F. This temperature requires unusually high compression ratios — making an ethane compressor for such service complicated and uneconomical. Also in order to condense ethane at 90°F, a heat sink at 85°F or lower is necessary. This condensing temperature is a difficult cooling water requirement in many locations. Thus a refrigerant such as propane is cascaded with ethane to transfer the energy from the ethane system to cooling water or air.

An example of a cascaded system is shown in Fig. 14-12, where an ethane system cascades into a propane system. The condenser duty for the ethane system is 30.71 MMBtu/hr. This duty becomes a refrigeration load for the propane system along with its 23 MMBtu/hr refrigeration at –40°F. Therefore, the propane refrigeration system has to be designed to provide a total of 53.71 MMBtu/hr at –40°F in addition to 10 MMBtu/hr at —-4°F and 7 MMBtu/hr at 44°F.

Refrigerant Properties

Physical properties of pure component refrigerants in common use are given in Fig. 14-13. The vapor pressure curves for ethane, ethylene, propane, propylene, and Refrigerant 22 (R-22) are available in Sections 23 and 24 or references 2, 5, 9, and 10. Vapor pressure data for other refrigerants can be obtained from refrigerant manufacturers.

Enthalpy data are necessary in designing any refrigeration system. Pressure-enthalpy diagrams for pure ethane, ethylene, propane, propylene, and R-22 are available in Section 24 of this data book or references 2, 5, 9, and 10. Enthalpy data for other refrigerants can be obtained from refrigerant manufacturers.

Horsepower and Condenser Duty Estimation

Since many gas processing plants require mechanical refrigeration, generalized charts[5] were developed to aid in a modular approach for designing refrigeration systems.

Because of the complexity of generalizing refrigeration systems, the charts have been developed for four of the most common refrigerants: ethylene, propylene, propane, and Refrigerant 22.

In order to apply these curves to most of the commercially available compressors, a polytropic efficiency of 0.77 was assumed. The polytropic efficiency was converted into an isentropic efficiency[1] to include the effects of compression ratio and specific heat ratio ($k = C_p/C_v$) for a given refrigerant. For well

FIG. 14-12

Cascade Refrigeration System

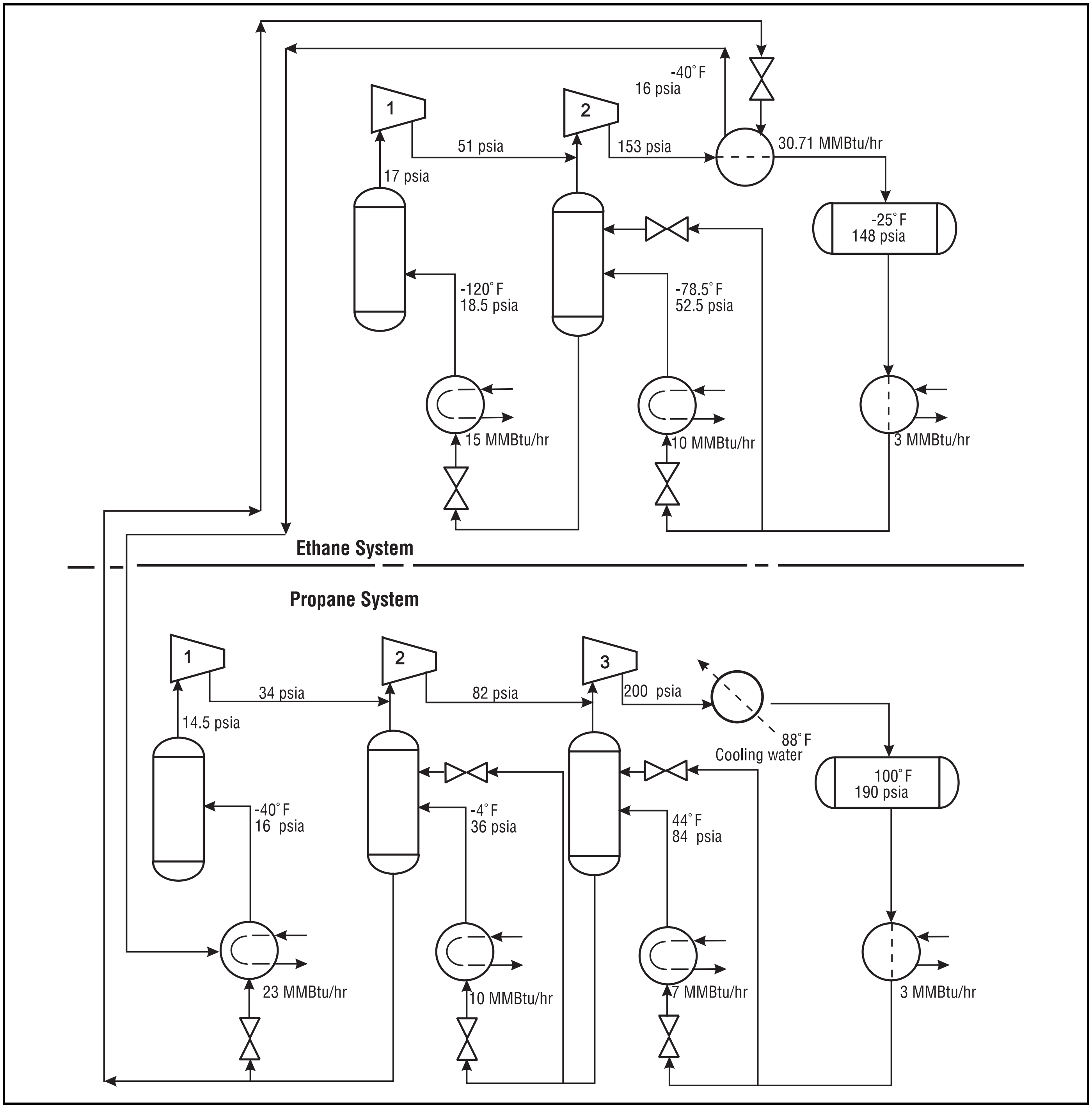

balanced and efficient operation of the compressor, an equal compression ratio between stages was employed.

The refrigeration level is defined as the temperature of the dew point vapor leaving the evaporator. The pressures at the compressor suction and side load inlet nozzles were adjusted by 1.5 psi to allow for pressure drop. These charts also include a 5 psi pressure drop across the refrigerant condenser for ethylene, and a 10 psi drop for propane, propylene, and Refrigerant 22.

Before developing any system, one must define refrigerant temperature and condensing temperature of the refrigerant based on the medium used for condensing.

To achieve maximum energy conservation and minimum energy cost, it is necessary to match the process conditions and refrigeration compressor design to obtain the best efficiency.

After defining the lowest refrigerant level and the condensing temperature, the pressure at the evaporator and con-

FIG. 14-13

Physical Properties of Common Refrigerants [1, 4, 9, 10, 11]

ASHRAE Refrigerant Number	Chemical Name	Chemical Formula	Molecular Weight	Normal Boiling Point °F @ 14.696 psia	Critical Temperature °F	Critical Pressure psia	Freezing Point °F @ 14.696 psia	Liquid Viscosity Centipoise	Liquid Thermal Conductivity Btu / (hr . sq ft . °F)/ft	Specific Heat Ratio k = C_p/C_v	Toxicity UL Group Classification
11	Trichloro-fluoromethane	$CC1_3F$	137.4	74.8	388.4	640.0	–168	0.421 @ NBT 0.395 @ 86°F	0.0506 @ NBT 0.0498 @ 86°F	1.13	5
114	Dichlorotetra-fluroethane	$CC1F_2OC1F_2$	170.0	38.4	294.3	474.0	–137	0.44 @ NBT 0.32 @ 86°F	0.0405 @ NBT 0.0366 @ 86°F	1.09	6
12	Dichlorodifluoro methane	$CC1_2F_2$	120.9	–21.6	233.6	597.0	–252	0.358 @ NBT 0.206 @ 86°F	0.0518 @ NBT 0.0392 @ 86°F	1.14	6
22	Chlorodifluoro methane	$CHC1F_2$	86.5	–41.4	204.8	716.0	–256	0.33 @ NBT 0.192 @ 86°F	0.0695 @ NBT 0.0495 @ 86°F	1.18	5a
600	N-Butane	C_4H_{10}	58.1	31.1	305.6	550.7	–217	0.213 @ NBT 0.159 @ 86°F	0.0663 @ NBT 0.061 @ 86°F	1.09	5b
290	Propane	C_3H_8	44.1	–43.7	206.0	616.3	–305	0.21@ NBT 0.101 @ 86°F	0.076 @ NBT 0.056 @ 86°F	1.14	5b
1270	Propylene	C_3H_6	42.1	–53.9	197.1	667.2	–301	0.15 @ NBT 0.089 @ 86°F	0.082 @ NBT 0.057 @ 86°F	1.15	5b
170	Ethane	C_2H_6	30.1	–127.4	9.01	707.8	–297	0.168 @ NBT 0.039 @ 86°F	0.082 @ NBT 0.048 @ 86°F	1.19	5b
1150	Ethylene	C_2H_4	28.1	–154.8	48.6	731.1	–272	0.17 @ NBT 0.07 @ 86°F	0.111 @ NBT 0.031 @ 86°F	1.24	5b
50	Methane	CH_4	16.0	–258.7	–116.7	667.8	–296	0.118 @ NBT	0.110 @ NBT	1.305	5b
717	Ammonia	NH_3	17.0	–28.0	270.4	1636.0	–108	0.25 @ 5°F 0.207 @ 86°F	0.29 @ 32°F 0.29 @ 86°F	1.29	2

denser can be established from the vapor-pressure curve for a specific refrigerant. All examples and data in this section are based upon pure component properties. In actual practice, pure hydrocarbon refrigerants are not always available. Impurities may cause significant deviations in design and performance.

One-Stage Systems — Figs. 14-14 through 14-17 provide data for estimating gas horsepower and condenser duty requirements for one-stage refrigeration systems using ethylene, propane, propylene, and R-22 refrigerants.

Two-Stage Systems — The data for estimating gas horsepower and refrigerant condenser duty requirements for two-stage refrigeration systems utilizing ethylene, propane, propylene, and R-22 are shown in Figs. 14-19 through 14-21.

Three-Stage Systems — The data for estimating gas horsepower and condenser duty requirements for three-stage refrigeration systems utilizing ethylene, propane, propylene, and R-22 are presented in Figs. 14-23 through 14-26.

Example 14-3 — Estimate the horsepower and condenser duty requirements for a single stage propylene refrigeration system that will provide 25 MMBtu/hr of process chilling at a refrigerant level of –20°F.

Solution Steps

The unit GHP for this example from Fig. 14-17 is 222 hp per MMBtu/hr of refrigeration duty at an evaporator temperature of –20°F and a condenser temperature of 100°F. And, from Fig. 14-17, the condenser duty factor equals 1.565 MMBtu/hr per MMBtu/hr of refrigeration duty for the same evaporator and condenser temperatures. Hence, the total power and condenser duty are:

$$\text{GHP} = (25)\,(222) = 5{,}550 \text{ hp}$$

$$Q_{cd} = (25)\,(1.565) = 39.13 \text{ MMBtu / hr}$$

Heat Exchanger Economizing — An alternative to flash economizing of the refrigeration cycle is to use a heat ex-

FIG. 14-14

Condenser Duty and Gas Horsepower for One Stage R-22 Refrigerant

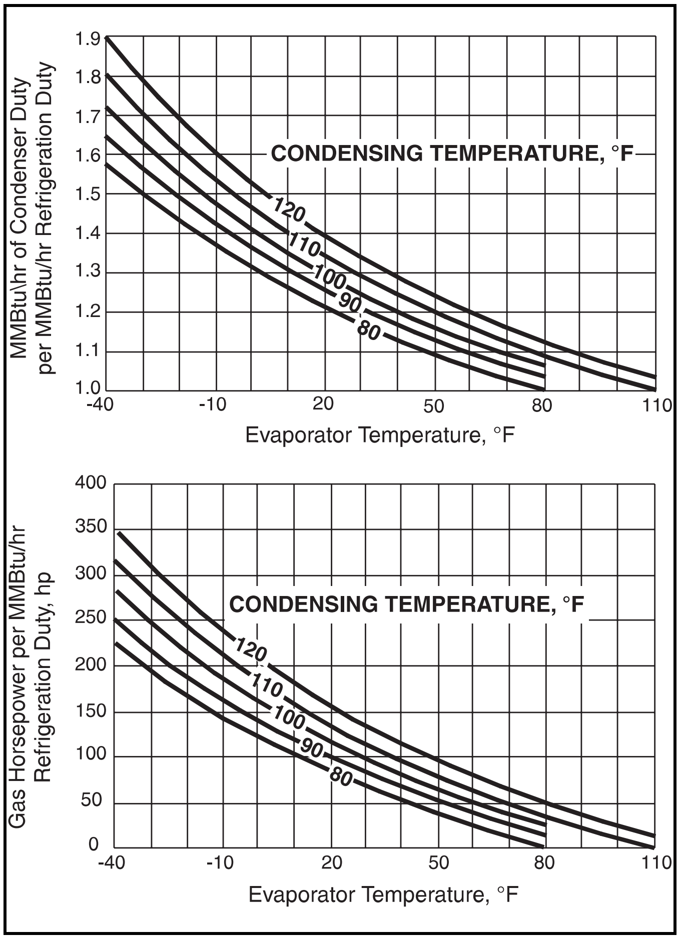

FIG. 14-15

Single-Stage Ethylene Refrigeration System

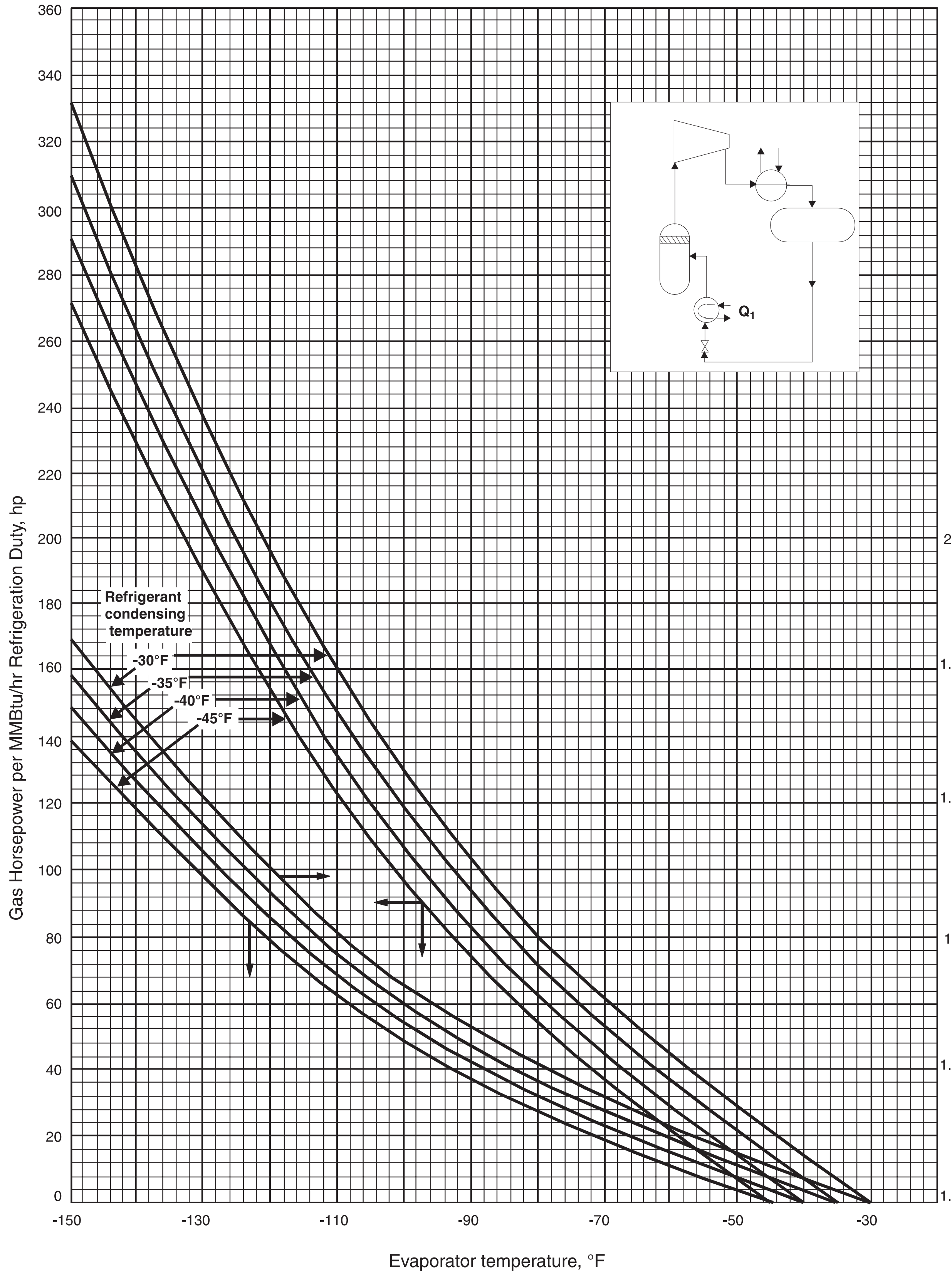

FIG. 14-16

Single-Stage Propane Refrigeration System

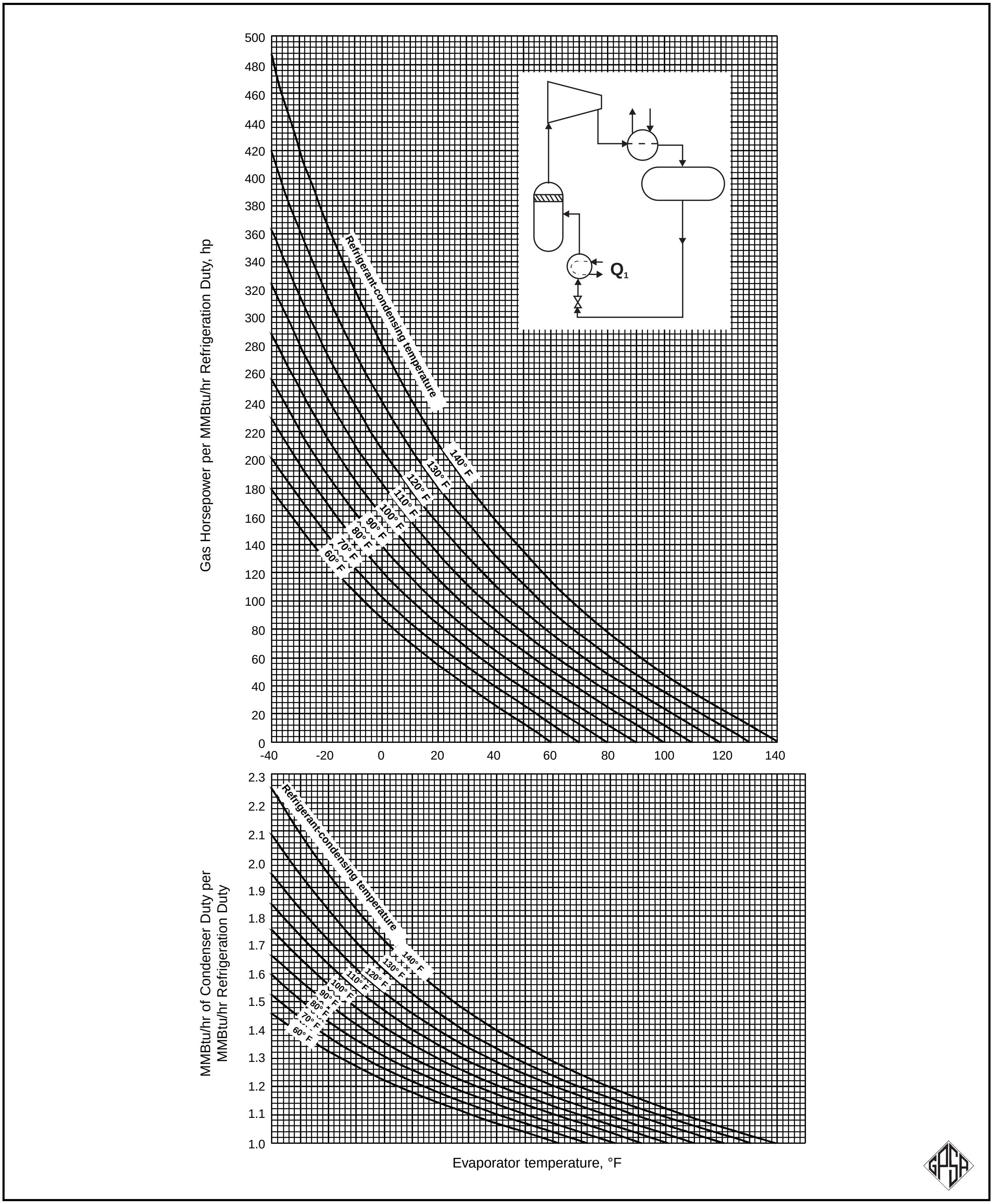

FIG. 14-17
Single-Stage Propylene Refrigeration System

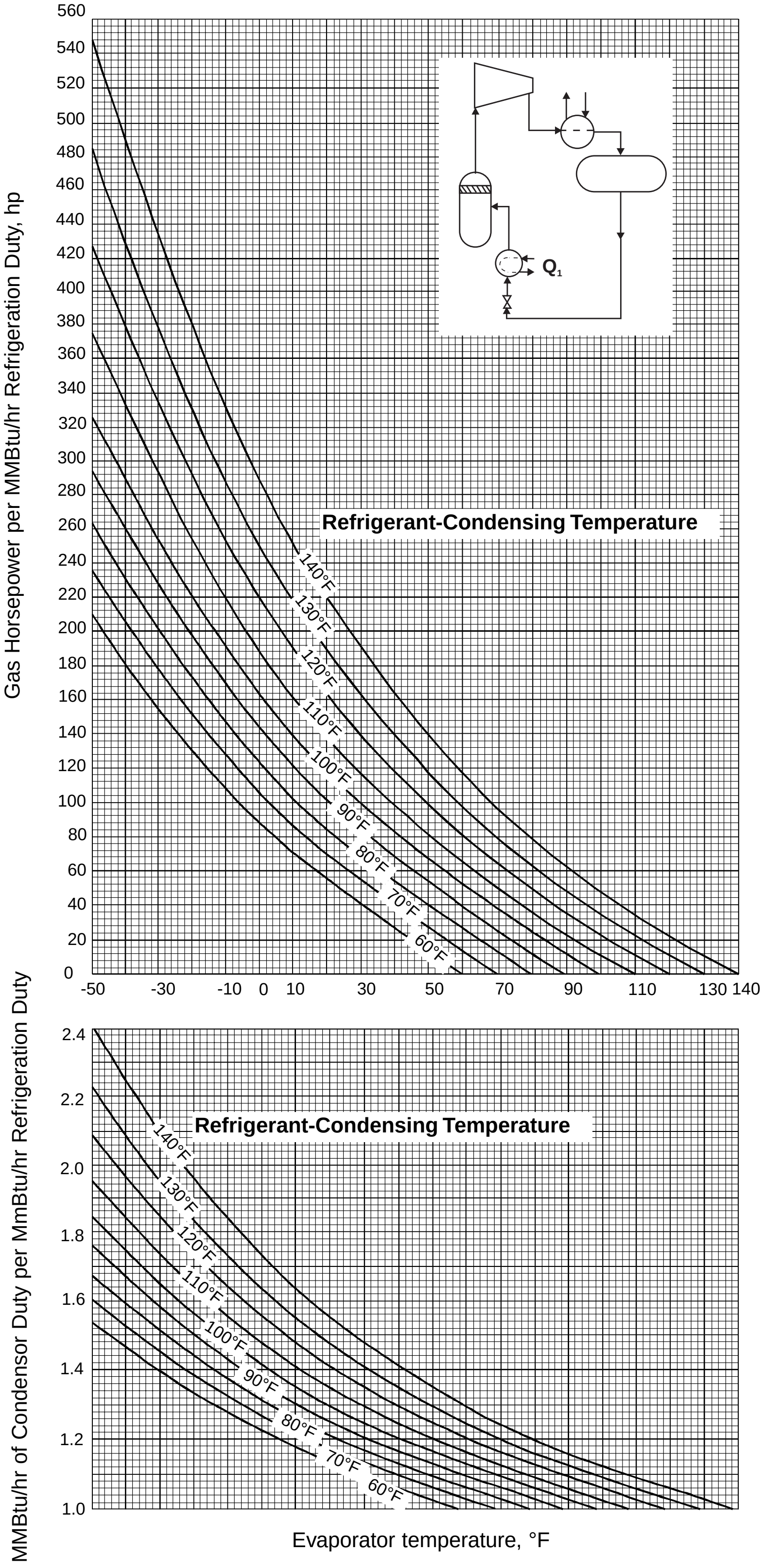

changer to accomplish an economizing step. Fig. 14-18 shows an example economizer using a heat exchanger. The heat exchanger is a chiller which uses some of the condensed refrigerant to subcool the balance of the condensed refrigerant stream. The refrigerant used for the chilling is then fed to the interstage (or second stage) of the refrigeration compressor. The subcooled refrigerant is then used for process chillers. The subcooled refrigerant produces less unusable vapor when flashed to suction drum conditions than a refrigerant stream that is not subcooled. Thus the use of the heat exchanger effectively shifts vapor from the low stage of compression to the high stage, thus saving power. The resultant process impact is very similar to the flash economization previously discussed.

Design and Operating Considerations

The following are some of the important parameters that should be considered while designing any refrigeration system to provide a safe, reliable, and economical operation.

Oil Removal — Oil removal requirements from evaporators are related to the type of the refrigerant, lubricant, evaporator, and compressor used in the refrigeration cycle. Fig. 14-26 illustrates the application of an oil reclaimer in a propane refrigerant cycle. In order to remove oil from the refrigerant, a slip stream of refrigerant from the bottom of the chiller is drained into the reclaimer where hot propane refrigerant from the compressor discharge is used to evaporate the refrigerant into the compressor suction. The oil is removed from the bottom of the reclaimer. Similar arrangements can be utilized for other hydrocarbon and ammonia refrigerants. Operation may be designed for either manual or automatic.

Where halocarbon refrigerants and/or synthetic lubricants are employed, it is imperative that the oil reclaimer system be approved by the compressor manufacturer.

Liquid Surge and Storage — All refrigeration systems should have a liquid surge and storage vessel, commonly called a receiver. A surge vessel is required on all systems where the operating charge in the evaporator(s) and the condenser(s) varies due to variable load conditions. In addition to accommodating a varying refrigerant charge, the receiver drains the condenser(s) of liquid so that the effective condensing surface is not reduced by liquid backing up. The refrigerant charge in a receiver may vary over a wide range, from a minimum at full load to a maximum at no load.

Systems with inadequate surge vessels often cause problems as they lose the liquid seal due to load variations that always occur. Surge vessels or receivers are relatively inexpensive and when sizing them, consideration should be given to: (1) a volume equal to 100% of the system inventory at 80% full level, and (2) the availability and quantity of refrigerant makeup.

Vacuum Systems — Refrigeration systems can operate with a suction pressure below atmospheric pressure. These vacuum systems require special considerations:

- Where hydrocarbons are used with reciprocating compressors (which employ rod "packing"), air can enter the compressor and possibly form a hazardous mixture. Extreme care should be taken where such systems are used. These systems must have a manual or automatic purge system. Double acting packing should be employed.
- Where halocarbons such as R-11, R-114, R-113, and other low pressure, high volume refrigerants are employed with centrifugal compressors, the deep vacuums may "draw" air and moisture through flanges, seals, etc. This water-oxygen combination in the presence of halocarbons forms acid and causes "crevice corrosion" of the tubes along with some other problems. A positive purge system must be employed and frequent monitoring of the moisture content in the refrigerant is suggested.
- High pressure halocarbons R-12, R-22, and others are employed in vacuum systems with reciprocating, centrifugal, and screw compressors. These systems will suffer from the same corrosion problems as defined above, but to a lesser extent. However, since they are generally

FIG. 14-18

Heat Exchanger Economizing

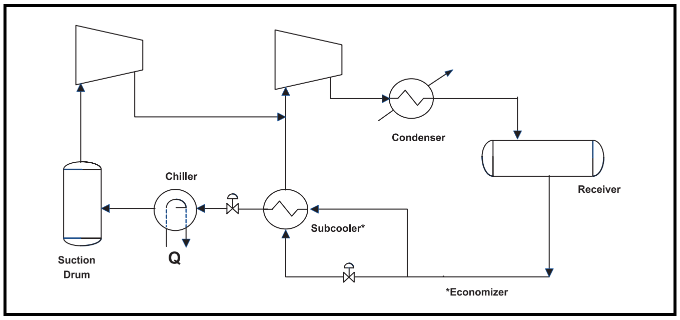

FIG. 14-19

Gas Horsepower and Condenser Duty for Two Stage R-22 Refrigeration

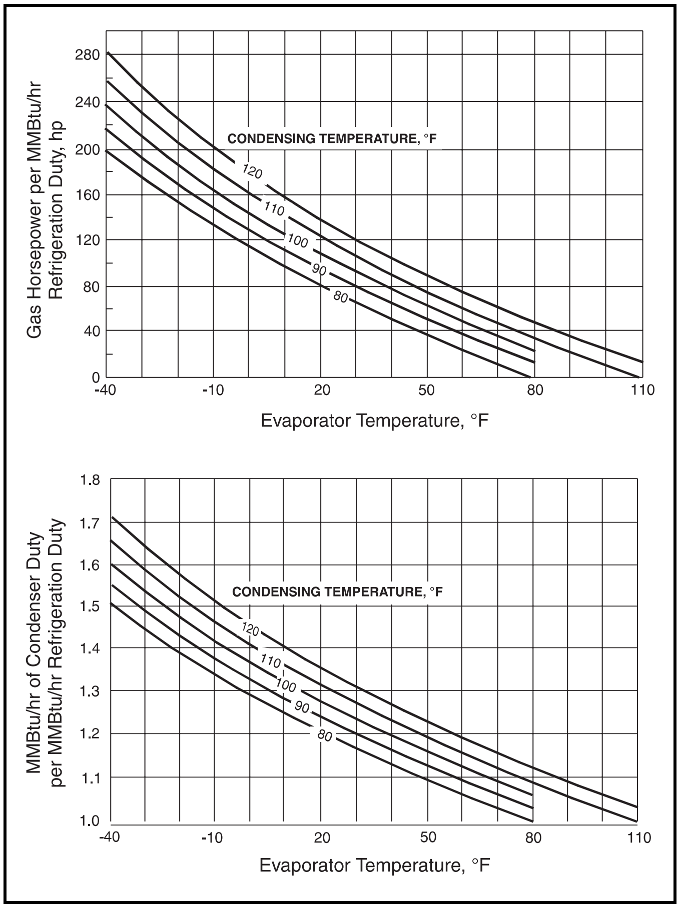

FIG. 14-20
Two-Stage Ethylene Refrigeration System

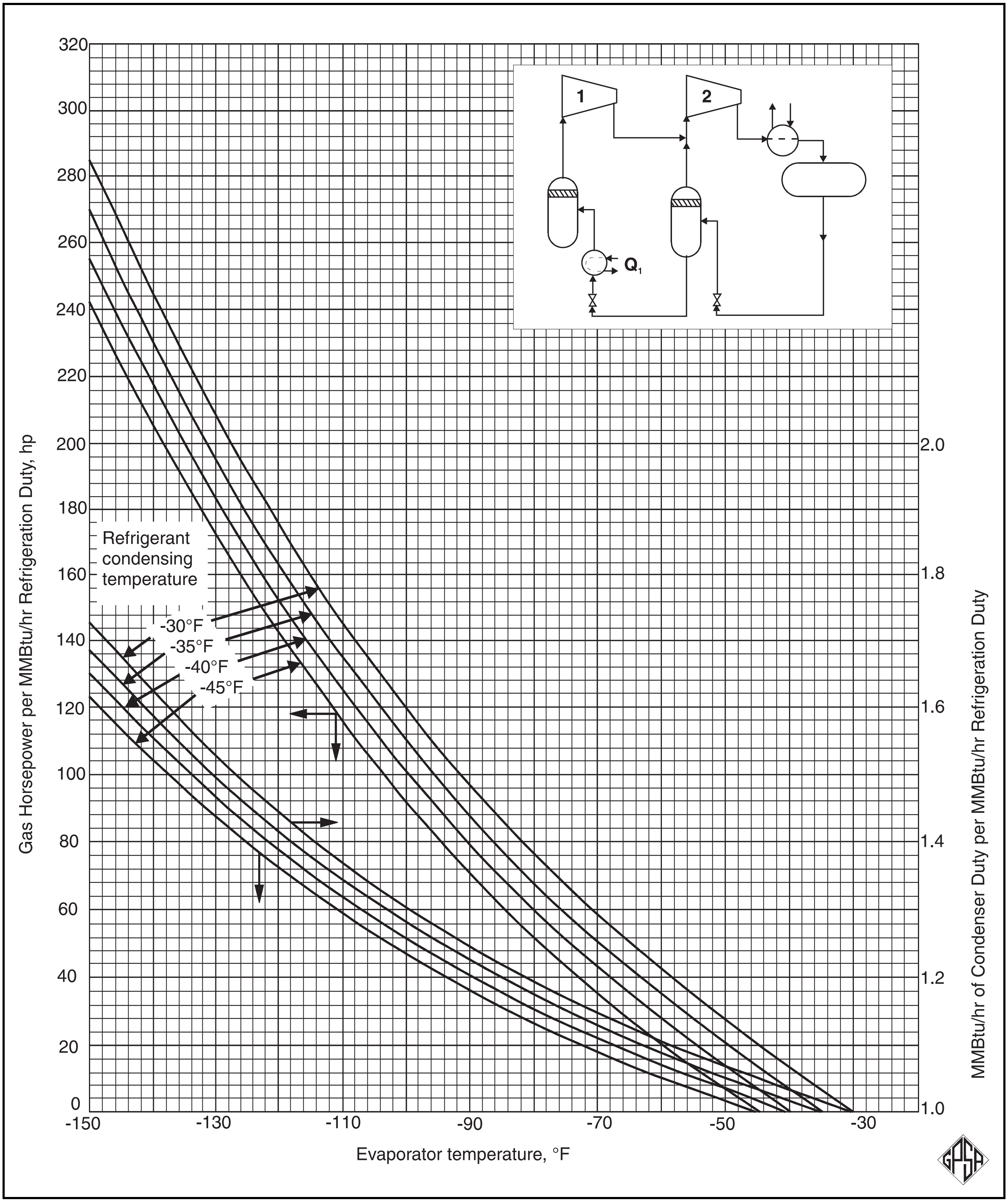

FIG. 14-21
Two-Stage Propane Refrigeration System

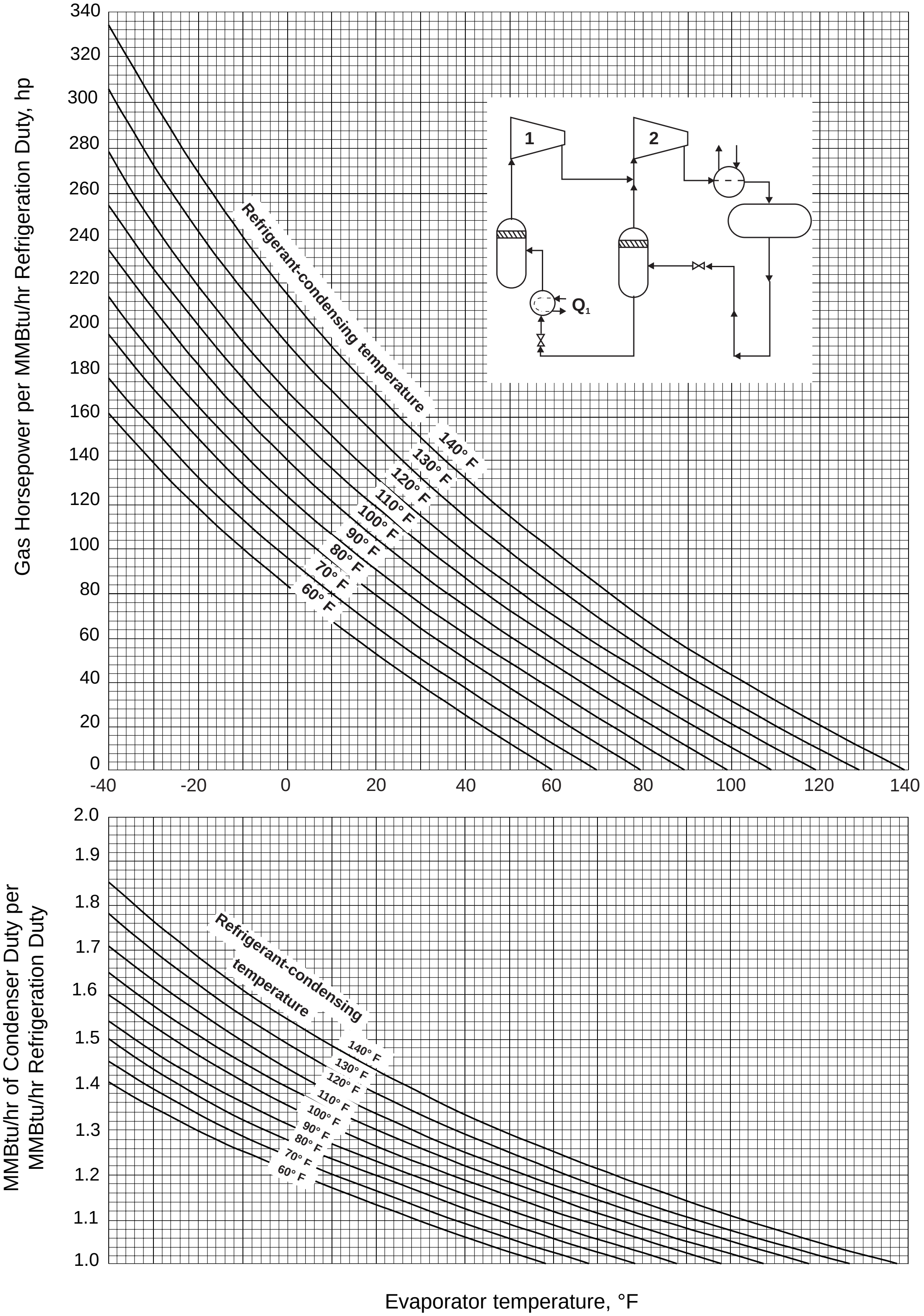

FIG. 14-22
Two-Stage Propylene Refrigeration System

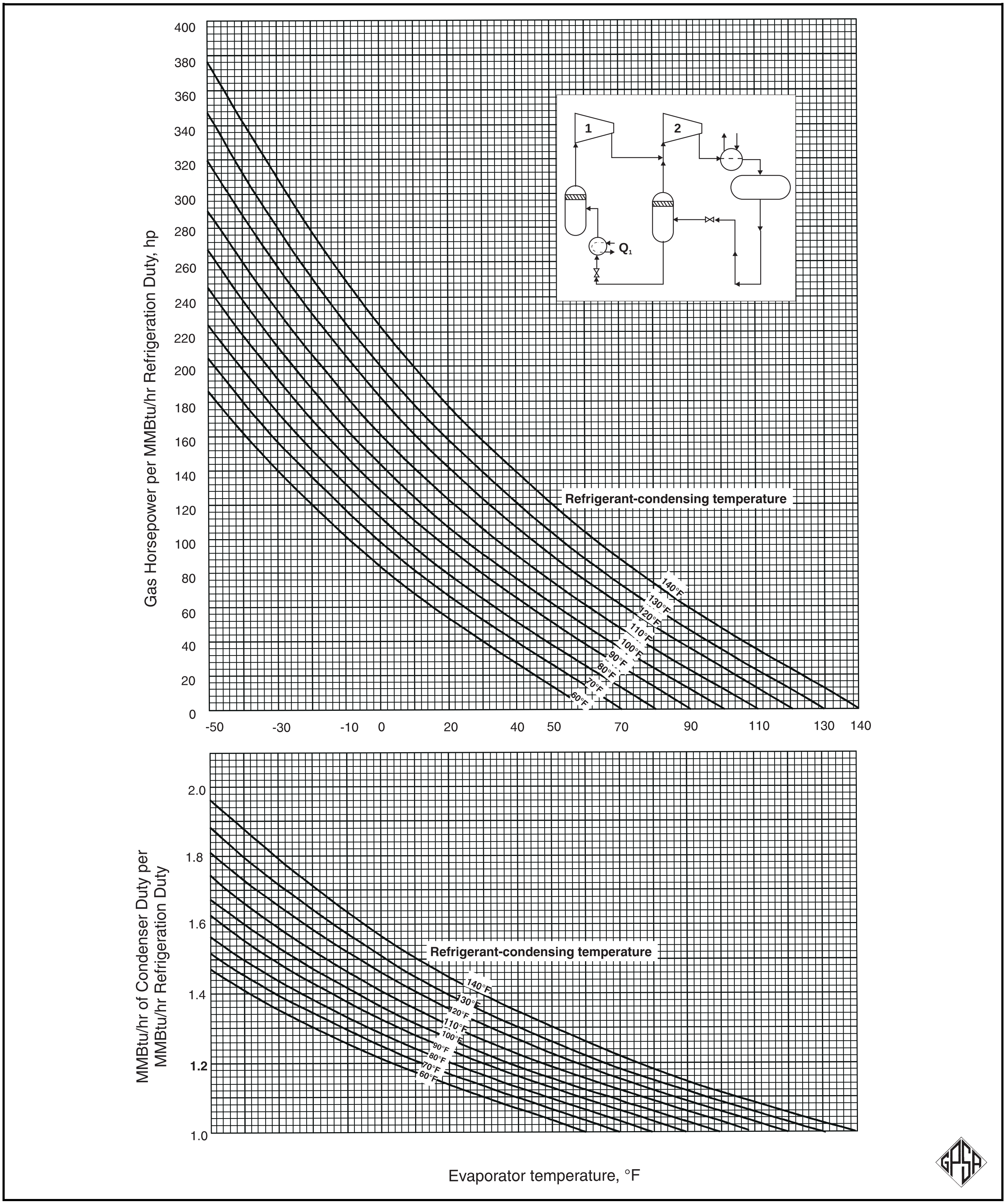

FIG. 14-23

Condenser Duty and Gas Horsepower for Three Stage R-22 Refrigerant

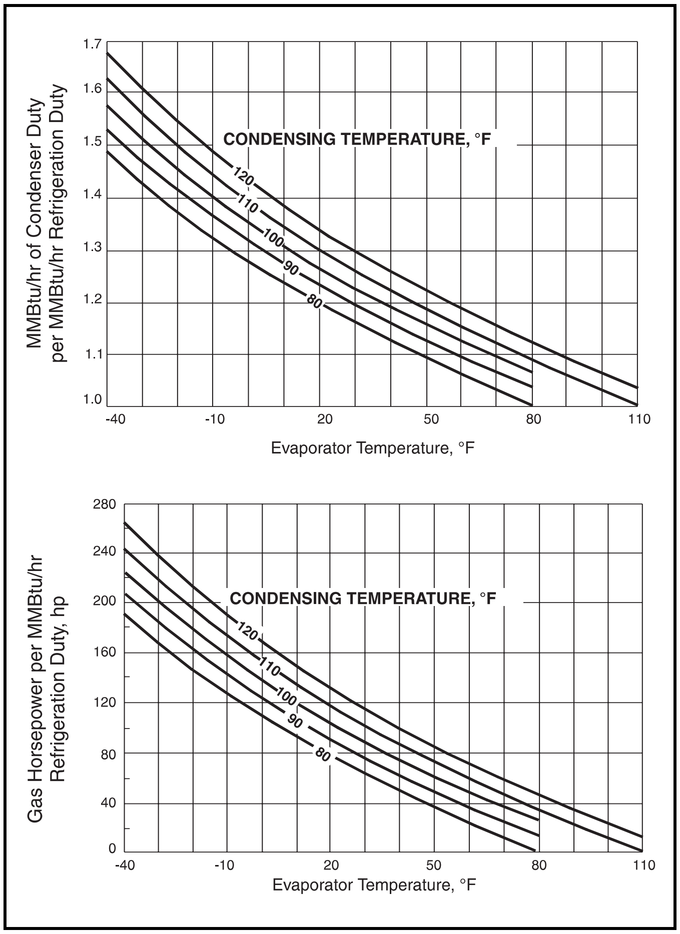

used at lower temperatures, water in the system can freeze the control valve and in the evaporator. Refrigerant dryers are required in these systems. A good purge system is also required.

- Ammonia has been employed with reciprocating, centrifugal, and screw compressors in vacuum service for many years. Since water will not freeze in the presence of ammonia and the aqua-ammonia formed is only slightly corrosive, this type system has few problems during operation. A good purge system is recommended.

Considerations for Vacuum Refrigeration Systems:

1. Eliminate all flanges where possible.
2. Weld all piping.
3. Use weld in-line valves.
4. Use steel “refrigeration type” stop valves with “back seating” feature and seal caps in lieu of hand wheels. All suction line valves should be angle valves to reduce pressure drop.
5. Install and maintain a good dryer on halocarbon and hydrocarbon systems.
6. Install a purge unit to keep the system free of air and noncondensables.
7. All control valves should have bellows-type seals in lieu of packing if the internal pressure is below atmospheric.
8. An oxygen analyzer is required to detect the presence of air.

Materials of Construction — Materials of construction for refrigeration systems relate specifically to the type of refrigerant used. Some of the basic guidelines are:

- No copper or copper-based alloys can be used with ammonia refrigeration systems. Where SO_2, H_2S, or similar corrosive chemicals are in the process side or are present in the atmosphere, copper or copper-based alloys are unsuitable.
- Generally, copper and copper alloys can be employed with hydrocarbon and halocarbon refrigerants; however, for most systems steel piping and components are recommended.
- Due to the ambient temperature vapor pressure of most refrigerants, the refrigeration system is normally designed for 250 psig or greater. The low temperature components of the system will operate at temperatures and coincident pressures far below the design pressures. Generally speaking, carbon steel can be used to –20°F. The ASME pressure vessel code section 8 addresses the issue of material selection and impact testing for systems operating below –20°F. Certain provisions in that code may allow carbon steel use for components which operate at pressures less than 25% of design pressure. In many applications, Charpy impact testing will be required.
- The ANSI B31.3 pipe code is generally used for most refrigeration systems in gas processing plants. This code has some provisions for use of materials to –50°F which are normally limited to –20°F and should be consulted for application in this area. There also exists an ANSI B31.5 “Refrigeration Piping Code” which has been used in some applications.
- Various alloys and aluminum are normally used for low temperature operations and may be economically advantageous at temperatures above –20°F.

Refrigerant Purity — Refrigerant contaminants can consist of several components:

- Lubricating oil tends to accumulate in the chiller. Lube oil contamination is reduced by controlling the amount of compressor cylinder lubrication, using synthetic lubricants, providing a good compressor discharge vapor separator to eliminate free oil, and providing a good reclaimer to remove oil accumulation. Fig. 14-27 illustrates one method for eliminating lube oil from the refrigeration system.
- Lighter constituents in the refrigerant charge, such as ethane for a propane system, tend to accumulate in the refrigerant receiver, causing higher condensing pressure. Light component contamination is controlled by the type of refrigerant which is purchased. It can be further reduced by purging the receiver vapors. If the process plant inlet pressure is sufficiently low, the accumulator can be purged into the plant inlet for re-recovery of the hydrocarbons.
- Butane and heavier constituents in a propane refrigeration system tend to accumulate in the chiller. Heavy component contamination is normally not a severe problem, and it is best controlled by draining from the bottom of the lowest temperature chiller.

FIG. 14-24

Three-Stage Ethylene Refrigeration System

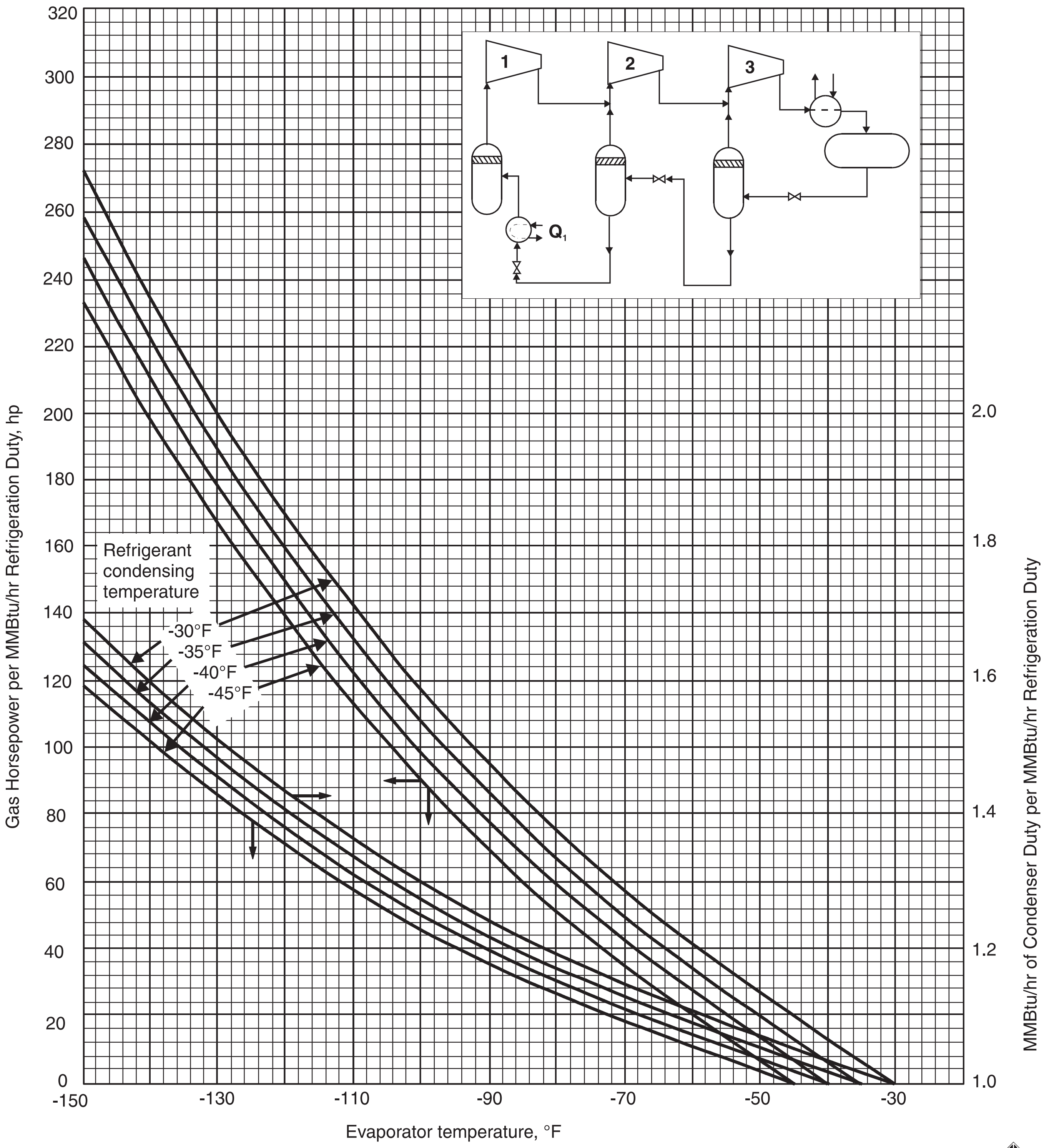

FIG. 14-25

Three-Stage Propane Refrigeration System

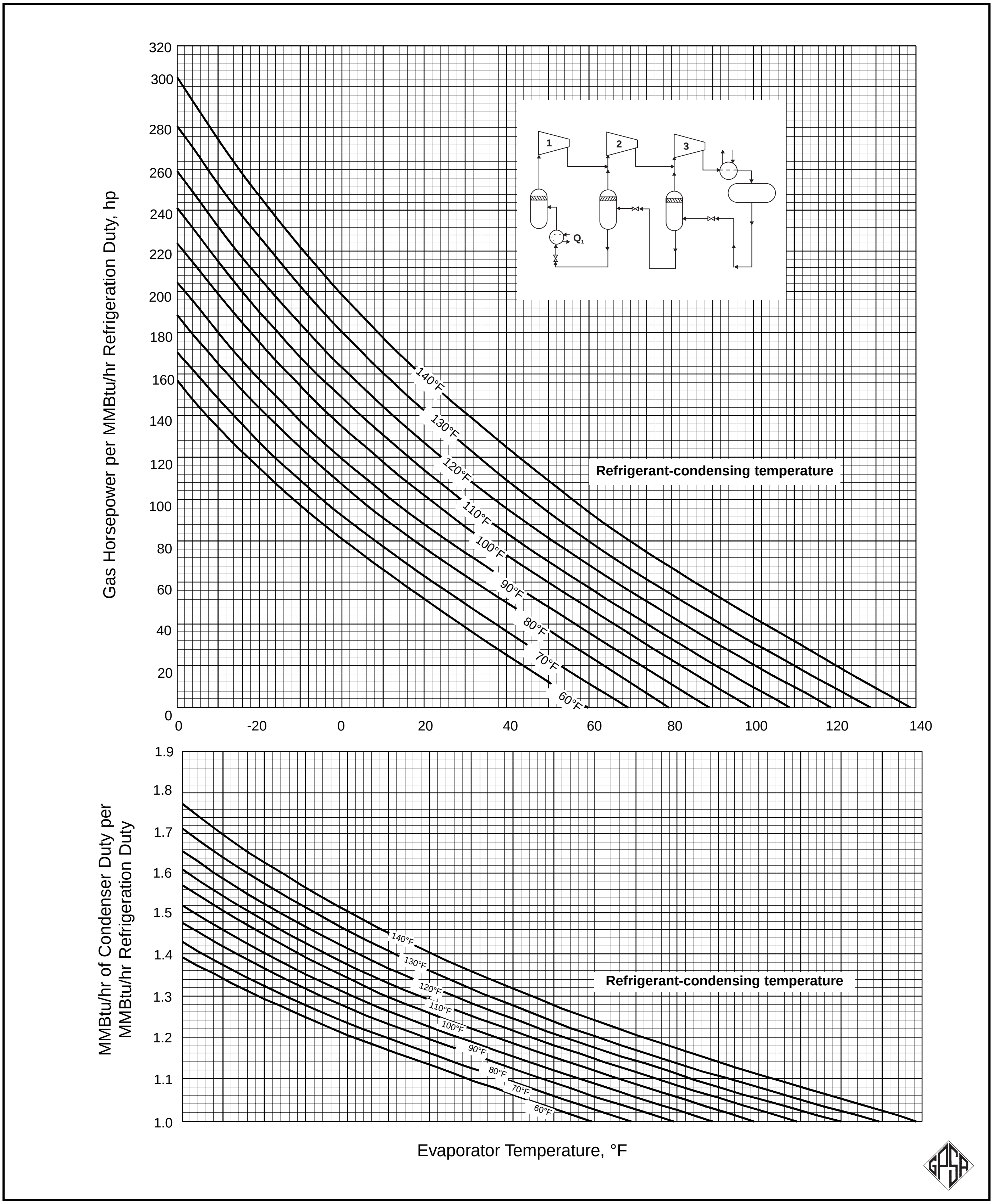

FIG. 14-26

Three-Stage Propylene Refrigeration System

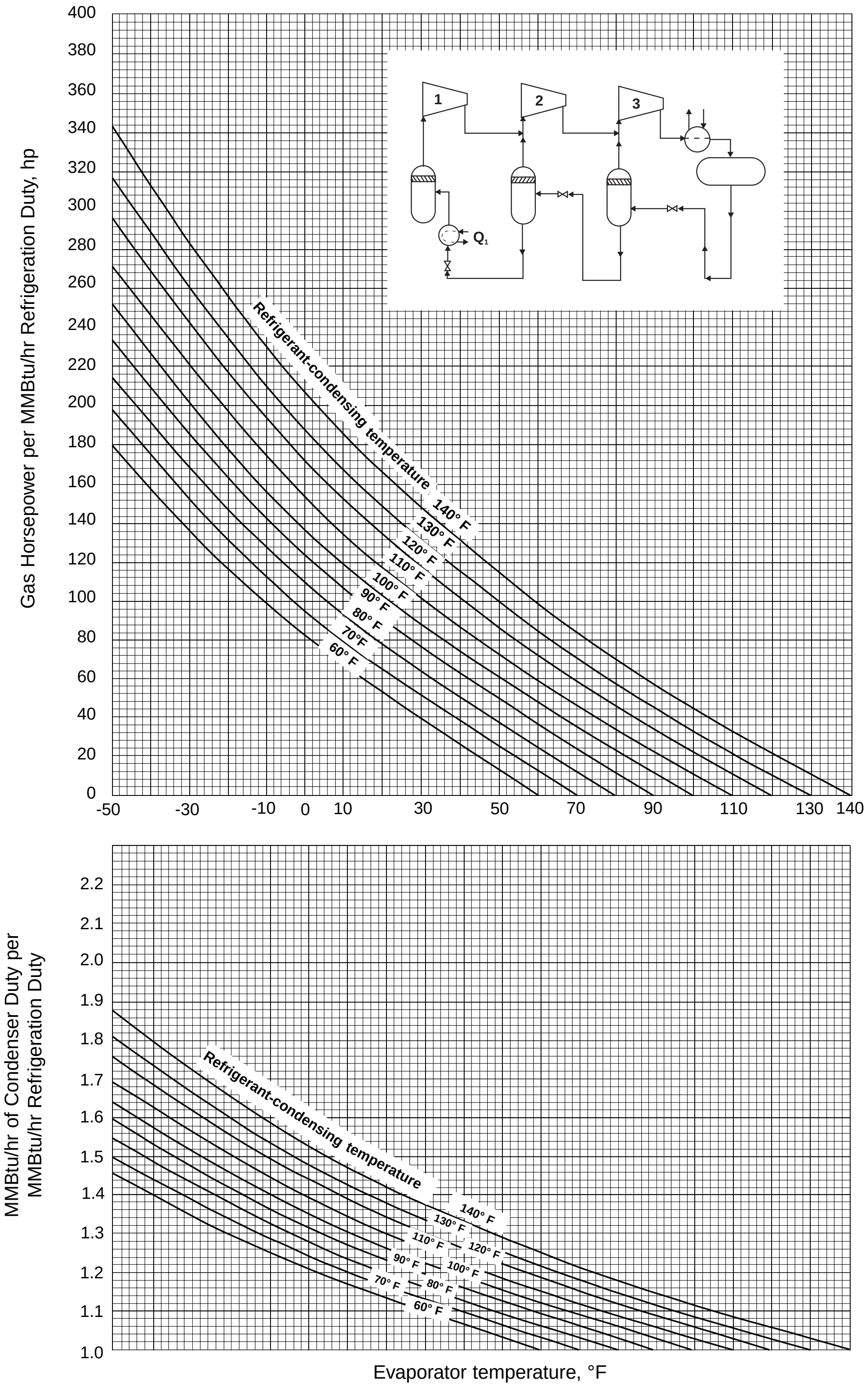

FIG. 14-27

Oil Reclaimer

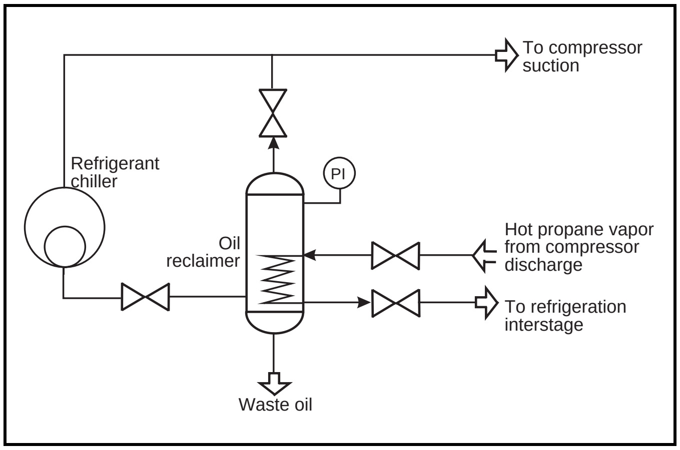

- Process fluid constituents may leak into the refrigerant in the chiller.
- Air can be introduced through the compressor packing if cylinder pressures are below atmospheric.
- Moisture, if present, will form ice and plug up the system either at the control valves or in the chiller. Moisture normally enters the system with the purchased refrigerant charge; it can be the source of considerable operating problems until it is removed. Some refrigeration systems employ a continuous dryer, some only a moisture indicator. The problem can usually be eliminated by injecting methanol in the system and draining it from the chiller. Moisture must also be removed prior to the start-up of a new system, normally by evacuating the system, purging the system with nitrogen or dry gas, injecting methanol, or a combination of these.

Seal Gas and Lube Oil System — Centrifugal compressors are sealed at the shaft by labyrinth seals. To protect against possible entry of oil into the refrigerant, an outward leakage of gas is permitted out of each labyrinth seal. However, to prevent a loss of valuable refrigerant, there is a provision at the middle of the compressor end labyrinth seal to inject a stream of less valuable gas (referred to as seal gas). The seal gas is supplied at a pressure higher than the pressure behind the compressor wheel at a rate slightly higher than that leaking out through the seals. It is the seal gas that leaks out, thus retaining the more valuable refrigerant. The seal gas leaks by the seals and combines with the lube oil leaving the unit and enters the lube oil surge tank.

A seal gas filter is usually provided at the inlet to the refrigerant compressor. The filter element should be changed out at regular intervals. The seal gas flow for a given pressure on the seal gas is set by factory clearances designed into each labyrinth seal.

Types of Compressors

There is a variety of compressors to choose from for refrigeration services. The most common are centrifugal, reciprocating, and screw compressors.

The type of refrigerant used also influences the compressor choice. Small, up to 200 hp, halocarbon-type refrigeration systems normally use reciprocating compressors which have the crankcase vented to the compressor suction. This type compressor can also be used for propane, but the problem of propane solubility in the oil at higher temperatures requires special lubricating oil and a crankcase heater.

Refrigeration load also influences the compressor selection. Centrifugal compressors are not normally economical below about 500 hp with motor drivers, or about 800 hp with turbine drives. Above 1,000 hp, and particularly where the load is close to an even multiple of this number, the use of centrifugal compressors becomes more economical. For lower horsepowers, reciprocating, screw, and rotary compressors are commonly used.

Centrifugal Compressors — At the normal process temperatures encountered in gas processing, a three or four wheel centrifugal compressor is normally required for refrigeration service. This offers the opportunity of utilizing multiple interstage flash economizers and permits multiple chiller temperature levels for further reductions in horsepower.

Centrifugal compressor capacity is controlled by speed variation or suction or discharge pressure throttling. Discharge throttling can cause surge. It is also possible to recirculate refrigerant discharge vapors to the compressor suction during operation at lower loading in order to avoid surge problems. Such recirculation results in wasted horsepower and is one of the primary drawbacks to utilizing centrifugal units.

For more details on Centrifugal Compressors, refer to Section 13.

Reciprocating Compressors — Process temperatures generally dictate two stage compression in a reciprocating machine. This affords the opportunity for one interstage economizer, and also one additional level of chilling. In a conventional refrigeration system, the first stage cylinder is normally quite large as a result of the low suction pressure. The economizer also reduces first stage volume, cylinder diameter, and consequently rod load. Capacity adjustment is accomplished by speed variation, variable clearance on the cylinders, valve lifters, and recirculation of refrigerant vapor to the suction. As with centrifugal compressors, recirculation does result in wasted horsepower. It is also possible to throttle the refrigerant suction pressure between the chiller and compressor in order to reduce cylinder capacity. However, suction pressure control can result in wasted horsepower and the possibility of below atmospheric suction pressure, which should be avoided.

For more details on Reciprocating Compressors, refer to Section 13.

Screw Compressors — Screw compressors have been used in refrigeration systems for many years. They can be employed with all refrigerants. The limitation for suction pressure is about 3 psia with standard discharge pressures at 350 psig. Discharge pressures of over 750 psig are also available.

Screw compressors are gaining popularity in the gas processing industry. Screws can operate over a wide range of suction and discharge pressures without system modifications. There are essentially no compression ratio limitations with ratios up to 10 being used. They operate more efficiently in the 2 to 7 ratio and are comparable in efficiency to reciprocating compressors within this range. Automatic capacity control can provide capacity adjustments from 100% down to 10% with comparable reduction in power requirements.

Screw compressors normally operate at 3600 rpm direct coupled to motor drives. However, they can operate over a range of speeds from 1500 to 4500 rpm. Engine drives, gas turbines, and expanders can also be used as drivers.

Rotary Compressors — There is a limited application for large rotary compressors. This is the low-temperature field in which the rotary serves the purpose of a high volume low-stage or booster compressor. These booster compressors are applied at saturated suction conditions ranging from –125°F to –5°F with R-12, R-22, ammonia, and propane refrigerants. Available units range in horsepower from 10 to 600 hp and in displacement from 60 to 3600 cfm in a single unit.

Mixed Refrigerants

Cryogenic processes which remove heat below ambient temperature generally use pure compounds as refrigerants in a closed mechanical refrigeration system. However, when it is not necessary to remove the heat at a practically constant temperature, it may be advantageous to use a mixture of refrigerants. In a proper composition, a mixed refrigerant can minimize temperature differences between the process stream and the refrigerant during heat exchange. This match provides an efficient chilling system.

The most common conventional refrigerants, R-22 and propane, exhibit atmospheric boiling temperatures of –41°F and –44°F, respectively. Lower temperatures can be obtained utilizing propylene, ethane, and ethylene, which have atmospheric boiling temperatures of –54°F, –128°F, and –155°F, respectively. However, these refrigerants require the use of a cascade system because condensation at ambient temperatures is not feasible. One alternative is the use of a mixed refrigerant; for example, ethane-propane. The ethane lowers the evaporation temperature while still permitting condensation at ambient temperatures, albeit at considerably higher pressures.

Fig. 14-28 compares the shape of process chilling curves for an ethylene refrigerant cycle with a mixed refrigerant cycle.[6] The shape of the refrigerant vaporization curve is a function of the composition of the mixed refrigerant. In Fig. 14-28 the composition of the mixed refrigerant is methane 8 mol %, ethylene 37 mol %, and propane 55 mol %.

Some of the design parameters[7] to be considered while evaluating the application of a mixed refrigerant cycle include:

- Compressor suction pressure.
- Shape of vaporization curve.
- Compressor discharge pressure and compression ratio.
- Type of controls.
- Type of compressor.

Mixed refrigerants present the problem of component segregation with the lighter components concentrating in the receiver, and the heavier components concentrating in the chiller unless the refrigerant is totally vaporized. Because of the high condensing pressure, mixed refrigerants significantly increase the horsepower per ton of refrigeration.

Chillers

Kettle Type Chiller — The most common type of chiller employed in the gas processing industry is the kettle type. The refrigerant is expanded into the shell of the kettle where a level is maintained to completely submerge the process tube bundle. A level control maintains the proper amount of refrigerant in the kettle.

When using a kettle type chiller, care should be taken to provide adequate vapor disengaging space above the operating level of liquid refrigerant. This type chiller improperly designed and operated is probably the largest single cause of compressor failure due to liquid carryover. The following equation allows approximation of allowable refrigerant load:

FIG. 14-28

Process Chilling Curves

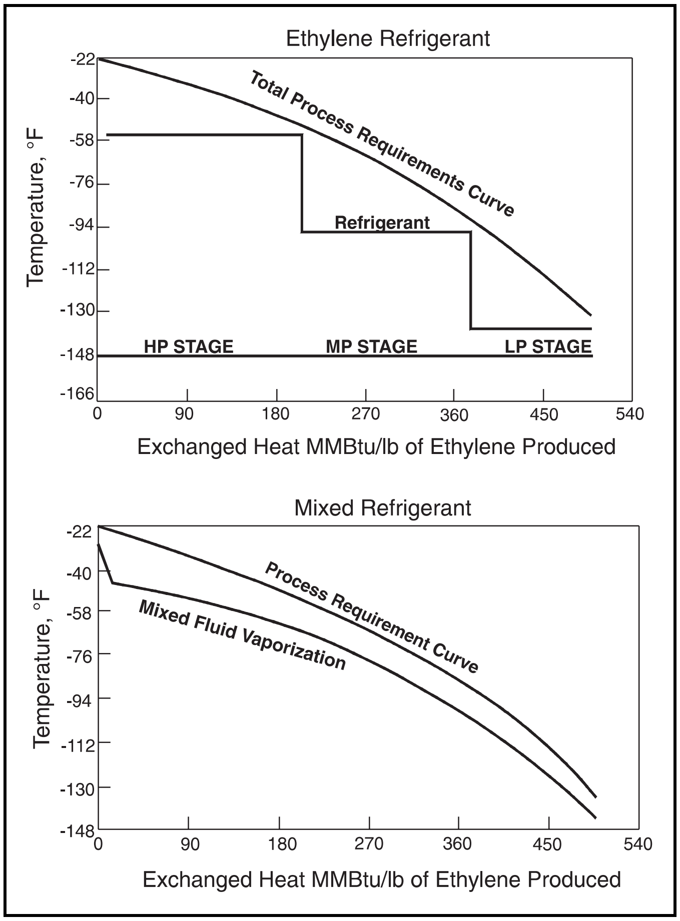

Allowable refrigerant load in lb/hr per cu ft vapor space

$$= \frac{(\text{S.F.})\,(\rho_V)\,(3980)}{(0.869)} \sqrt{\frac{\sigma}{\rho_L - \rho_V}} \qquad \textbf{Eq 14-10}$$

where S.F. = Safety Factor = ½

HTRI has a detailed method for determining the chiller sizing taking into account the vapor space requirement.

Plate-Fin Chillers — Modern cryogenic plants frequently employ plate-fin exchangers for gas cooling and chilling. When the design calls for a hot gas-gas exchanger, a gas chiller, and a cold gas-gas exchanger in sequence, then it may be convenient to put these services in single plate-fin exchanger. Also, plate-fin exchangers offer significant savings for low temperature application where stainless steel is needed for shell and tube units. Significant pressure drop savings can be realized by using single or multiple units for chilling services.

For other types of heat exchangers, refer to Sections 9 and 10.

System Controls

Level Controls — External cage (displacer-type) level controls are the most commonly used in refrigeration services and are probably the most reliable and easy to maintain instruments. However, because the float chamber is external to the refrigeration system, it is imperative that the float chamber and connecting lines to the chiller be adequately sized and well insulated. Vaporization of refrigerant (due to heat leak) in the float chamber can result in difficulty in maintaining proper level. Internal float level controls eliminate this problem, but present some problems in instrument maintenance.

A differential pressure device is also frequently used for chiller level control; it affords good control when properly installed. The high pressure side connection from the liquid phase should be large, well insulated, and installed in such a way that lubricating oil cannot accumulate and cause erroneous readings. The low pressure side connection to the vapor phase should be uninsulated and possibly even liquid sealed or heated to prevent liquid accumulation.

The same problem exists in level indication. External gauge glasses should have large connecting lines to the chillers and good insulation. Bull's-eye sight glasses are much better for direct indication of chiller level and normally do not present any maintenance problem other than cleaning the glass. Frost plugs are sometimes used and give an approximate level indication while requiring no maintenance.

Pressure Controls — Refrigerant compressor high suction pressure control may be desirable when there are multiple refrigerant compressors in the system. Without high suction pressure control, loss of one refrigerant compressor can result in overloading of the other compressors and loss of all units in an unattended operation. However, suction pressure control can also result in horsepower waste if the compressor suction is throttled unnecessarily.

The refrigerant compressor hot gas bypass is used to prevent compressor suction pressure from getting too low. If the process load decreases, the hot gas bypass will open to maintain a satisfactory compressor suction pressure in an unattended plant. If hot gas bypass remains open, the compressor capacity should be adjusted to reduce bypassing in order to conserve energy. Screw compressors need no such arrangements as they can be automatically unloaded to satisfy the suction pressure settings.

Evaporator Temperature — The evaporator (or chiller) temperature is normally controlled by controlling the refrigerant pressure on the chiller. This may be accomplished by using back pressure valves, refrigerant compressor speed, or hot gas bypass around the compressor.

Low Ambient Controls — All refrigeration systems should have low ambient controls where ambient temperature is below 40°F. These controls, which maintain a preset pressure differential between the condenser and the evaporator pressures, are necessary for continuous operation and for start-up at low ambients. There are several approaches to these controls:

1. For air coolers used as condensers, louvers, air recirculation systems, and fan cycling are employed.
2. For both shell and tube condensers and air coolers, condensing pressure can be controlled by installing a pressure regulating valve actuated by condensing pressure set at a minimum predetermined pressure in the line between the condenser and the liquid receiver. In addition, a small pressure regulator set at a predetermined pressure is installed in a line between the discharge line and the liquid receiver. This regulator will direct enough hot gas to the receiver to keep the pressure high enough to operate the evaporator liquid control valve.
3. Where a shell and tube condenser is used, a water flow control valve operated by condenser pressure can be utilized. This type control may cause sediment and scaling in the condenser.
4. Where evaporative condensers are used, several methods can be employed to control condensing pressure depending upon the ambient temperature and type of installation.
    - The condenser can be selected to operate as an air cooler at temperatures below 32°F (water system shut down and drained) while employing a fan cycling controller.
    - A system as described above in item 2 can be employed.
    - Where the system is indoors with the condenser outdoors, an indoor water sump can be employed with a fan cycling controller.

Refrigerant System Troubleshooting

Figure 14-30 contains a check list for troubleshooting refrigeration systems. This is not an exhaustive list but rather a handy guide to prompt inspection of the system depending on the operating problems experienced.

Freon (CFC) Refrigerant Phase Out

Clorinated fluorocarbons (commonly called Freon) have been used for many years as effective refrigerants in many applications. However, the stability of these compounds, coupled with their chlorine content, has linked them to the depletion of the earth's protective ozone layer. As a result, these compounds have been phased out of production and usage globally. Hydrofluorocarbons (HFC) have been developed as an alternative.

One compound, HFC-134a has been developed to replace dichlorodifluoromethane (CFC-12 or R-12). This compound is reasonably close to R-12 in performance but differences in equipment design and operation must be taken into account in the replacement. Figure 14-29 shows a comparison of HFC-134a and R-12 for an example application. One of the important differences is the higher compression ratio necessary for this refrigerant. Properties for HFC-134a are given in Figures 14-31 through 14-33.

ABSORPTION REFRIGERATION

Even though absorption refrigeration has seen little use in the gas processing industry, it does have application. In areas where there is low cost natural gas, where a low level heat source is available, or where electrical rates have risen dramatically, absorption refrigeration may be an economical way to attain modest temperature level refrigeration. In circumstances where unused boiler capacity is available in summer months, absorption units can be utilized to produce refrigeration.

Lithium Bromide-Water Systems

The lithium bromide absorption refrigeration cycle[8] operates on the simple principle that, under low absolute pressure, water will boil at a low temperature. Fig. 14-34 shows a schematic arrangement of lithium bromide-water system. The system uses heat to efficiently produce refrigeration. The

FIG. 14-29

Theoretical Cycle Comparison of R-12 and HFC-134a*

	R-12	HFC-134a
Capacity (as % of R-12)	100	99.7
Compressor		
Exit temperature F	188.2	181.5
Exit Pressure, psia	195.6	213.7
Compression Ratio	4.1	4.7

*Conditions: Condenser, 130F; Evaporator, 35F; Comp. Suction, 80F; Expansion Device,125F

lower shell is divided into absorber and evaporator sections while the upper shell consists of the generator and condenser sections. The evaporator section contains the refrigerant, water. A coil, through which the cooling system water circulates, is inserted into the evaporator to establish a heat exchange.

The refrigerant gains heat from the cooling system water, and because of low pressure maintained in the evaporator, quickly reaches saturation temperature and vaporizes, cooling the system water. The remainder of the cycle deals with reclaiming this refrigerant.

The affinity of lithium bromide for water causes the refrigerant vapor to be absorbed by the strong solution in the absorber section. The diluted (weak) solution is pumped into the generator, where steam or hot water is used to drive the water out of the solution as a vapor. The vapor passes into the condenser and changes back to liquid which returns to the evaporator to be reused. Meanwhile, the strong solution left in the generator flows back to the absorber to complete the cycle.

The lowest chilled water temperature achieved by this system is 42°F and typically the unit operates between 42°F and 50°F with varying refrigeration capacity loads.

Aqueous Ammonia System

Refrigeration can be provided by using waste heat with the water-ammonia absorption cycle. This cycle was originally employed in the 1800's and has been refined over the years. It lost its economic value in the 1930's as the more efficient centrifugal and reciprocating compressor systems became inexpensive. Due to its basic inefficiency, the ammonia absorption system cannot be justified unless low level waste heat is available, such as low pressure steam or hot process streams.

Ammonia absorption capacities have been designed in sizes from a minimum of 2.4 MMBtu/hr at –50°F and 3.6 MMBtu/hr at 20°F to a maximum of 30 MMBtu/hr at –50°F and 60 MMBtu/hr at 20°F. Most systems would employ shell and tube condensers and absorbers; however, evaporative cooled absorbers have been used. Air cooled condensers and absorbers could also be used. Various schemes can be used for supplying the water requirements of the condensers and absorbers other than series flow. Parallel flow can be used to reduce absorber size and the heat input to the system.

The heat source will govern the generator design. The generator may be finned-surface heat exchangers with aqueous solution pumped through the tubes for vapor heating mediums or double-pipe heat exchangers for liquid heating mediums. Fig. 14-35 shows a flow sheet of an ammonia absorption system.

Reliability — Ammonia absorption systems are normally installed with spare aqua pumps and spare reflux pumps offering a comparison to centrifugal, reciprocating, and screw compressor systems that have a spare compressor-motor train. Downtime from failure of mechanical items is negligible due to the 100% spare pumps.

FIG. 14-30

Refrigeration System Checklist

Indication	Causes
High Compressor Discharge Pressure	Check accumulator temperature. If the accumulator temperature is high, check: 1. Condenser operation for fouling. 2. High air or water temperature. 3. Low fan speed or pitch. 4. Low water circulation. If condensing temperature is normal, check for: 1. Non-condensables in refrigerant. 2. Restriction in system which is creating pressure drop.
High Process Temperature	Check refrigerant temperature from chiller. If refrigerant temperature is high and approach temperature on chiller is normal, check: 1. Chiller pressure. 2. Refrigerant composition for heavy ends contamination. 3. Refrigerant circulation or kettle level (possible inadequate flow resulting in superheating of refrigerant). 4. Process overload of refrigerant system. If refrigerant temperature is normal, and approach to process temperature is high, check: 1. Fouling on refrigerant side (lube oil or moisture). 2. Fouling on process side (wax or hydrates). 3. Process overload of chiller capacity.
Inadequate Compressor Capacity	Check: 1. Process overload of refrigerant system. 2. Premature opening of hot gas bypass. 3. Compressor valve failure. 4. Compressor suction pressure restriction. 5. Low compressor speed.
Inadequate Refrigerant Flow to Economizer or Chiller	Check: 1. Low accumulator level. 2. Expansion valve capacity. 3. Chiller or economizer level control malfunction. 4. Restriction in refrigerant flow (hydrates or ice).

FIG. 14-31
Pressure vs. Temperature of HFC-134a[12]

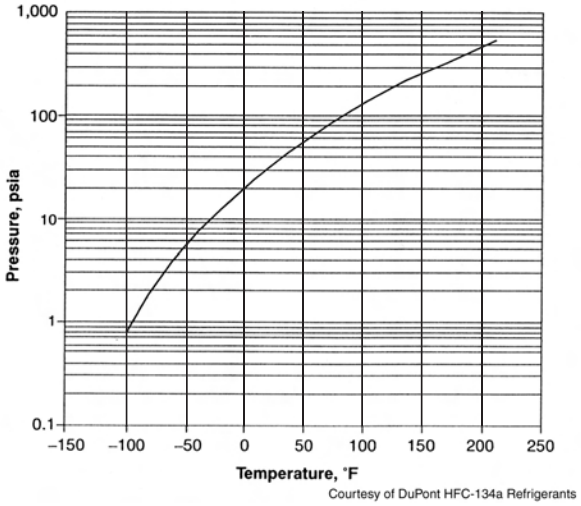

Courtesy of DuPont HFC-134a Refrigerants

FIG. 14-32
Vapor Thermal Conductivity of HFC-134a at Atmospheric Pressure[12]

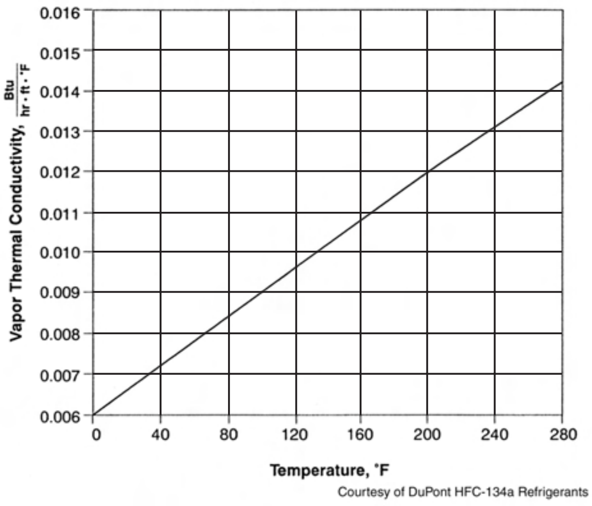

Courtesy of DuPont HFC-134a Refrigerants

FIG. 14-33
Pressure-Enthalpy Diagram for HFC-134a[12]

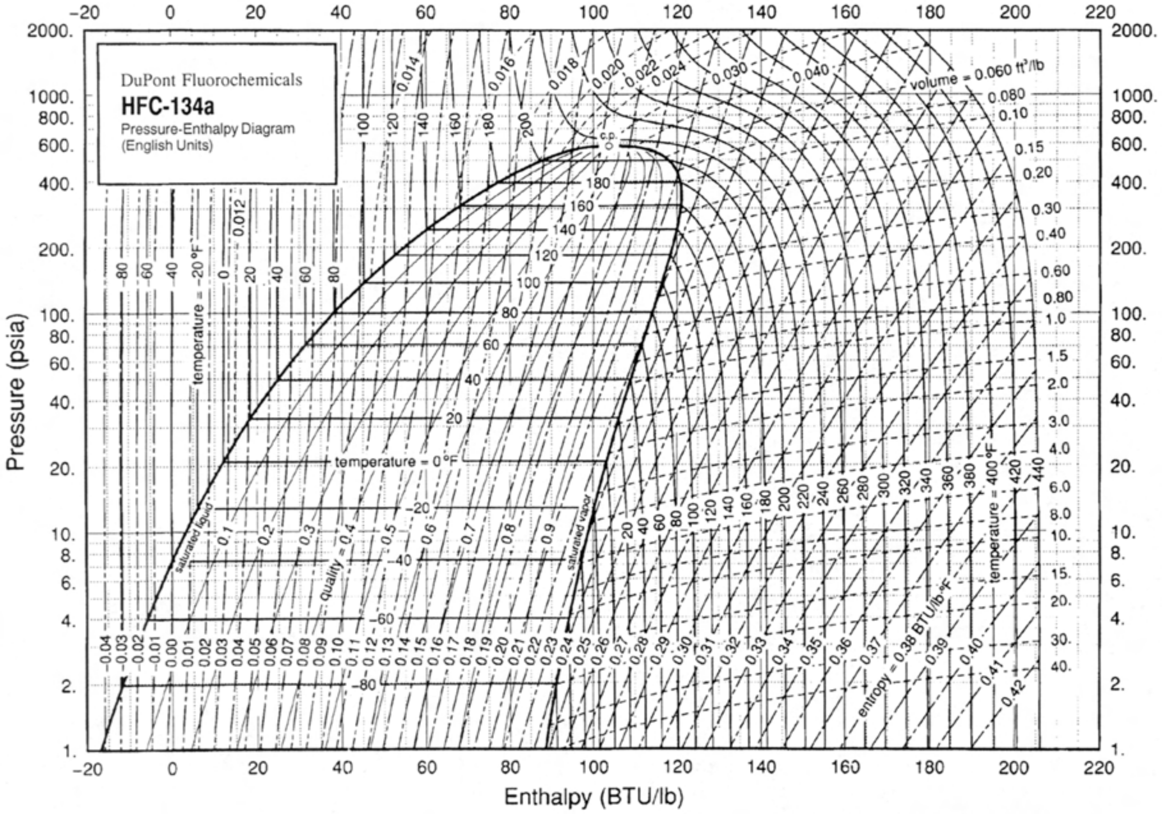

Courtesy of DuPont HFC-134a Refrigerants

FIG. 14-34

Lithium Bromide-Water Refrigeration System

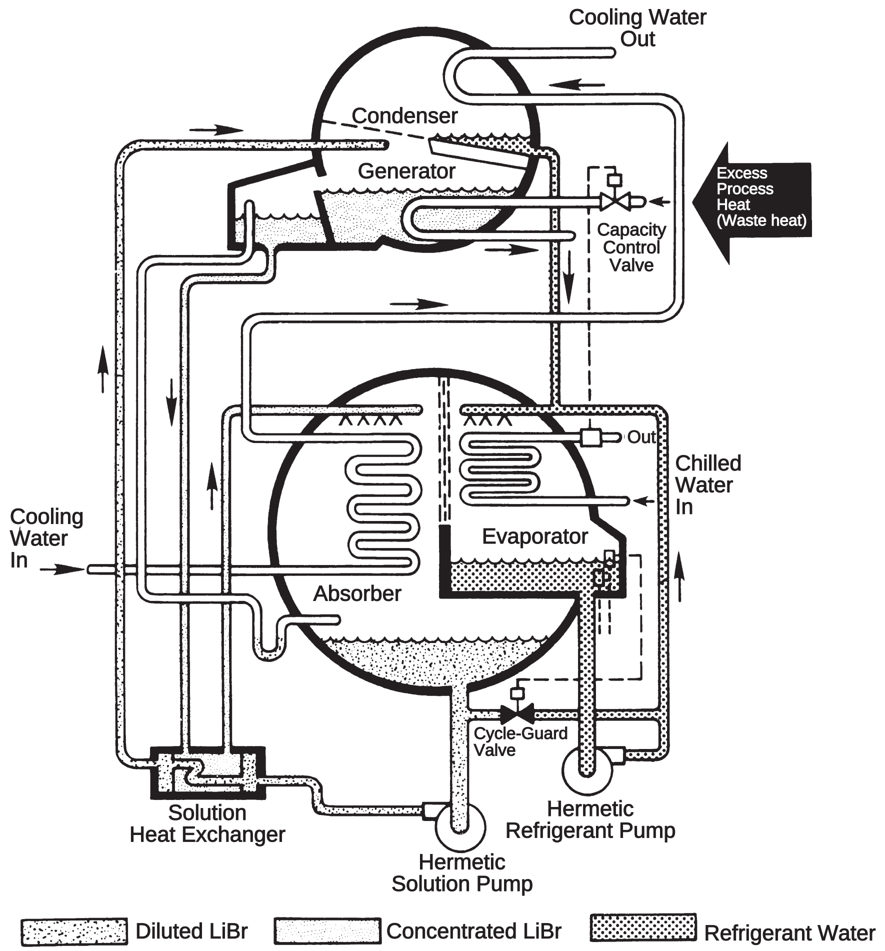

FIG. 14-35

Flow Sheet of an Ammonia Absorption System

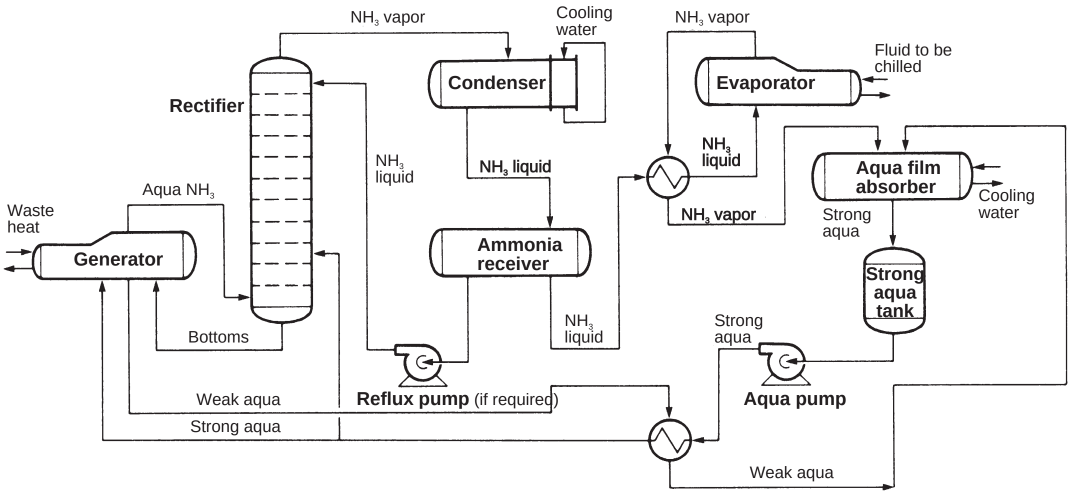

Design Flexibility — Ammonia absorption systems are usually custom designed for each specific application. Evaporator temperatures down to –60°F are possible. Systems can be designed one stage or two stage for several different evaporator temperatures. Systems can be increased in size and evaporator temperatures raised or lowered by the addition of heat exchange surface. Evaporator temperatures are related to heat input temperature. Raising the temperature of the heat source lowers the possible evaporator temperature. The evaporators remain 100% efficient at all times as the refrigeration is oil-free. There is no need to add oil fouling factors to the evaporator design, thus saving 5 to 10% in the evaporator cost. The choice of evaporator design has no limitations.

Applications — The ammonia absorption system has many applications. It can produce refrigeration from waste heat for almost any kind of application in the chemical and petroleum industry. Waste steam has been used as the heat source in many installations in the chemical and petroleum industry providing temperatures from 50°F to –50°F. Process vapor streams and hot oil have also been used as heat sources. Exhaust gases from gas turbines would be an excellent source of heat and this heat would normally be capable of providing low temperature refrigeration due to its high temperatures. Supplemental firing can also be added for peak loads. Stack gases of many kinds could also be used as a heat source.

REFERENCES

1. Elliott Multistage Compressors, Bulletin P-25A, Elliott Co., Jeanette, PA, 1975.
2. Starling, K. E., “Fluid Thermodynamic Properties for Light Petroleum Systems,” Gulf Publishing, Houston, TX, 1973.
3. Mehra, Y. R., “Refrigeration Systems for Low-Temperature Processes,” Chem. Eng., July 12, 1982, p. 94.
4. Sibley, H. W., “Selecting Refrigerants for Process Systems,” Chem. Eng., May 16, 1983, p. 71.
5. Mehra, Y. R., “Refrigerant Properties of Ethylene, Propylene, Ethane and Propane,” Chem. Eng., Dec. 18, 1978, p. 97; Jan. 15, 1979, p. 131; Feb. 12, 1979, p. 95; Mar. 26, 1979, p. 165.
6. Kaiser, V., Becdelievre, C. and Gilbourne, D. M., “Mixed Refrigerant for Ethylene,” Hydro. Processing, Oct. 1976, p. 129.
7. Kaiser, V., Salhi, O. and Pocini, C., “Analyze Mixed Refrigerant Cycles,” Hydro. Processing, July 1978, p. 163.
8. Carrier Hermetic Absorption Liquid Chillers, Form 16JB-3P, Carrier Corporation, Syracuse, NJ, 1975.
9. E. I. DuPont de Nemours & Co., Bulletins G-1, C-30, S-16, T-11, T-12, T-22, and T-114D, Wilmington, DE 19898.
10. ASHRAE “Thermodynamic Properties of Refrigerants,” 1791 Tullie Circle N.E., Atlanta, GA 30329.
11. Underwriters’ Laboratories Reports MH-2375, MH-3134, MH-2630, and MH-3072.
12. E.I. Dupont de Nemours & Co., "Dupont™ HFC-134a Properties, Uses, Storage and Handling."

NOTES:

SECTION 15

Prime Movers For Mechanical Drives

"Prime movers for mechanical drives" are used as a common name for machines made for transferring mechanical energy to pumps and compressors, including:

- Steam turbines
- Gas turbines
- Electrical motors
- Internal combustion engines

Special considerations for the use of prime movers as drives for generators are not included in this chapter.

Mechanical Drive Steam Turbines

TURBINE TYPES

Mechanical drive steam turbines are major prime movers for compressor, blower, and pump applications. Steam turbines are available for a wide range of steam conditions, horsepower, and speeds. Typical ranges for each design parameter are:

Inlet Pressure, psig	30 – 2000
Inlet Temperature, °F	saturated – 1000
Exhaust Pressure, psig	saturated – 700
Horsepower	5 – 100,000
Speed, rpm	1800 – 14,000

Steam turbines used as process drivers are usually required to operate over a range of speeds in contrast to a turbine used to drive an electric generator which runs at nearly constant speed. Significant hardware differences exist between these two applications. Only variable speed process drivers will be covered here.

Mechanical drive steam turbines are categorized as:

- Single-stage or multi-stage
- Condensing or non-condensing exhausts
- Extraction or admission
- Impulse or reaction

Single Stage/Multi-Stage

In a single-stage turbine, steam is accelerated through one cascade of stationary nozzles and guided into the rotating blades or buckets on the turbine wheel to produce power. A Rateau design has one row of buckets per stage (Fig. 15-2). A Curtis design has two rows of buckets per stage and requires a set of turning vanes between the first and second row of buckets to redirect the steam flow (Fig. 15-3). A multi-stage turbine utilizes either a Curtis or Rateau first stage followed by one or more Rateau stages.

Single-stage turbines are usually limited to about 2500 horsepower although special designs are available for larger units. Below 2500 horsepower the choice between a single and a multi-stage turbine is usually an economic one. For a given shaft horsepower, a single-stage turbine will have a lower capital cost but will require more steam than a multi-stage turbine because of the lower efficiency of the single-stage turbine.

Condensing/Non-Condensing

The energy available in each pound of steam which flows through the turbine is a function of the overall turbine pressure ratio (inlet pressure/exhaust pressure) and inlet temperature. Condensing turbines are those whose exhaust pressure is below atmospheric. They offer the highest overall turbine pressure ratio for a given set of inlet conditions and therefore require the lowest steam flow to produce a given horsepower. A cooling medium is required to totally condense the steam.

Non-condensing or back-pressure turbines exhaust steam at pressures above atmospheric and are usually applied when the exhaust steam can be utilized elsewhere.

Extraction/Admission

Some mechanical drive steam turbines are either extraction or admission machines. Steam is extracted from, or admitted to, the turbine at some point between the inlet and exhaust

FIG. 15-1

Nomenclature

A = area, sq in.
ASR = actual steam rate, lb/(hp • hr)
BMEP = brake mean effective pressure, psi
D = diameter, in.
F = steam low, lb/hr
f = frequency, Hz
h = specific enthalpy of superheated steam, Btu/lb
h_f = specific enthalpy of saturated water, Btu/lb
h_g = specific enthalpy of saturated steam, Btu/lb
N = number of power strokes per min
P = number of magnetic poles in motor
s = specific entropy of superheated steam, Btu/(lb • °F)
s_f = specific entropy of saturated water, Btu/(lb • °F)
s_g = specific entropy of saturated steam, Btu/(lb • °F)
S = piston stroke, ft
TSR = theoretical steam rate, lb/(hp • hr)
v = velocity, ft/sec
ρ = density, lb/cu ft

FIG. 15-2

Rateau Design

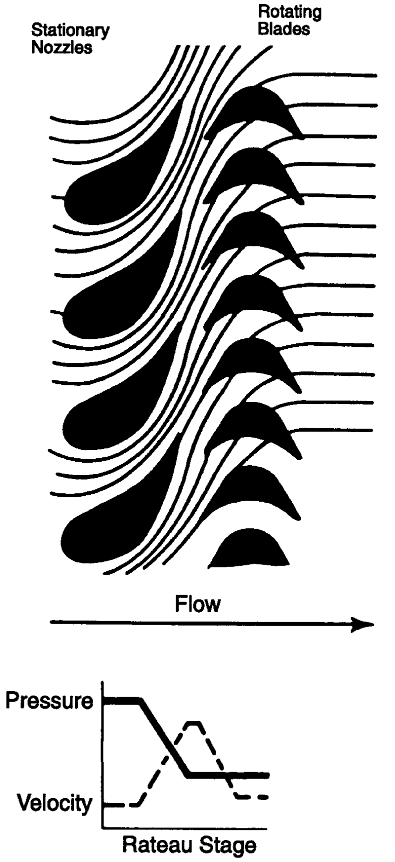

Courtesy of General Electric

FIG. 15-3

Curtis Design

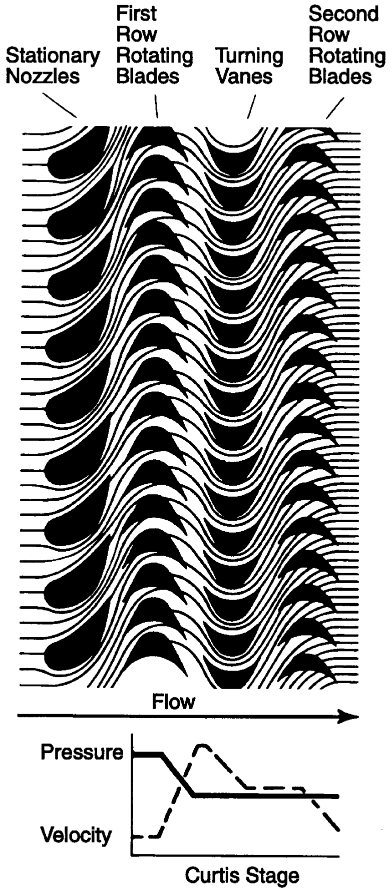

Courtesy of General Electric

FIG. 15-4

Extraction / Admission Flow Turbines

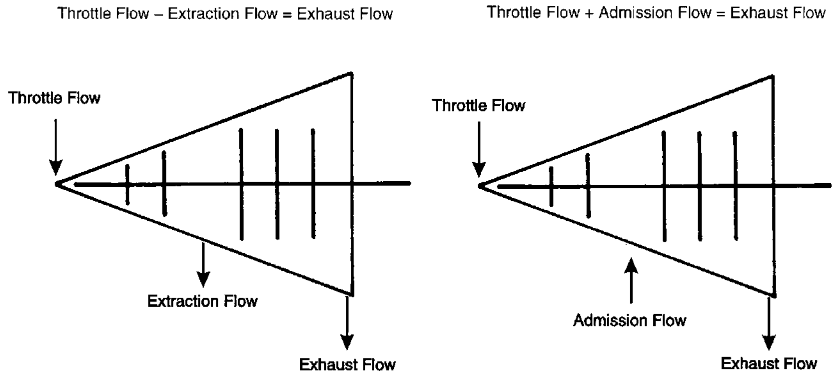

Courtesy of General Electric

(Fig. 15-4). Admission or extraction units may be either controlled or uncontrolled. An uncontrolled turbine accepts or provides steam based only on the characteristics of the steam system to which the extraction or admission line is connected. A controlled turbine will control the flow of extraction or admission steam based on some process measurement such as pressure or flow. In general, if the horsepower associated with the extraction or admission flow is greater than 15% of the total turbine horsepower, a controlled extraction (or admission) turbine is used.

Impulse/Reaction

Turbines are further categorized by the philosophy employed in the steam path design and are divided into two major design concepts: impulse and reaction. In an impulse turbine the pressure drop for the entire stage takes place across the stationary nozzle. In reaction designs, the pressure drop per stage is divided equally between the stationary nozzles and the rotating blades (Fig. 15-5). For given horsepower, speed and steam conditions, a reaction turbine will, in general, employ approximately three times more stages than an impulse turbine in the same turbine span. Most U.S. mechanical drive steam turbines are of the impulse type.

TURBINE COMPONENTS

Trip and Throttle Valve/Stop (Block) Valve

A trip-and-throttle valve or stop valve, or both, may be positioned between the steam supply and the turbine inlet control valve(s) (Fig. 15-6). During normal operation this valve remains fully open and its primary function is to shut off the steam supply in response to a trip (shutdown) signal. In addition a trip-and-throttle valve can be used to modulate the steam flow during start-up and can be either manually or hydraulically positioned from zero lift to 100% lift. The stop valve can only be positioned either in the closed or fully open positions. In order to minimize the pressure drop through the trip-and-throttle valve, maximum inlet velocities are usually limited to 150 ft/sec. Velocities above this level will usually result in high pressure drops which will reduce turbine efficiency.

Inlet Control Valves

The primary function of the inlet control valve(s) is regulation of the steam flow to provide the appropriate horsepower and speed. These valves may also close in response to a shutdown signal. Throttling which occurs across the control valve(s) reduces the thermal performance of the turbine. This efficiency loss is a function of the control valve design and overall turbine pressure ratio. For a given amount of throttling, turbines with large pressure ratios suffer smaller efficiency losses than turbines with smaller pressure ratios (Fig. 15-7).

Multi-stage turbines may have a single inlet control valve or several control valves to regulate the inlet steam. Typical multi-valve steam turbines will have from three to eight control valves (Fig. 15-8). Multi-valve turbines have higher efficiencies at reduced loads because only the flow through one of the control valves is incurring a throttling loss (Fig. 15-9).

FIG. 15-5

Turbine Types

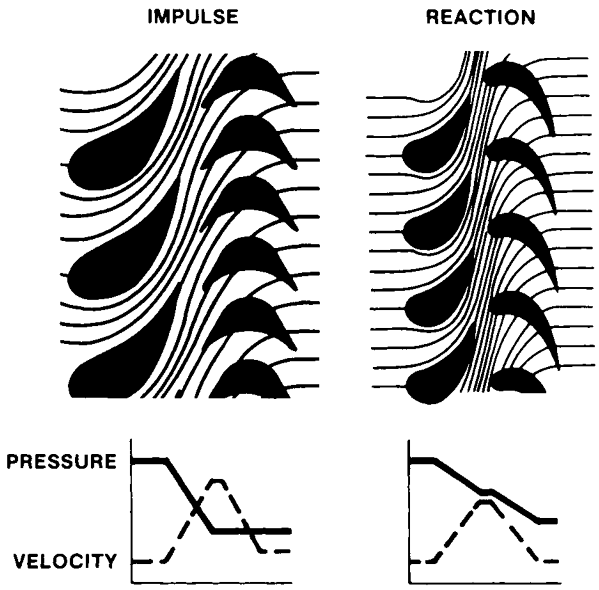

Courtesy of General Electric

FIG. 15-6

Single Valve with Hand Valves

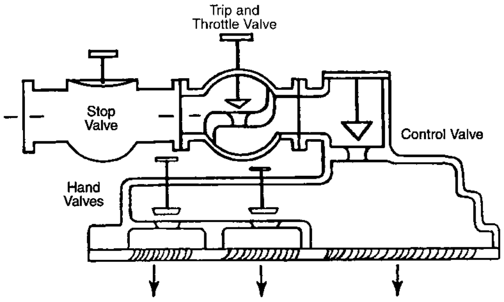

Courtesy of General Electric

FIG. 15-7

Loss in Available Energy of Steam Due to 10% Throttling

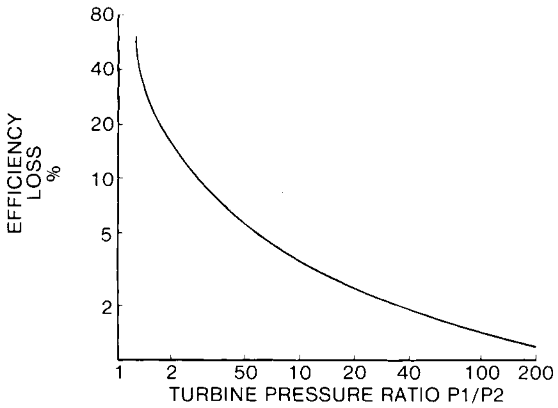

Turbines with a single control valve will often employ hand valves to improve efficiency at reduced loads. For the turbine shown in Fig. 15-6 both hand valves would be open at or near full load. As the load on the unit is reduced one or both of these hand valves can be closed to reduce throttling loss. Fig. 15-10 shows the efficiency advantage at reduced loads.

Nozzles/Blades (Buckets)

On constant speed turbines a design objective is to avoid all bucket resonances at the operating speed. On variable speed turbines, although the design objectives remain the same, it is seldom possible to avoid all blade resonance because of the wide operating speed range. In these cases it is important to identify all blade resonance and to verify that all stresses are well below the material strength.

Exhaust Casings

Turbine exhaust casings are categorized by pressure service (condensing or non-condensing) and number of rows of the last stage buckets (single flow, double flow, triple flow). Non-condensing exhausts are usually cast steel with most of the applications between 50 and 700 psig exhaust pressure. Most condensing exhausts are steel fabrications although some utilize cast iron construction. Maximum exhaust flange velocities are typically 450 ft/sec. Velocities above this level will usually result in substantial increases in exhaust hood losses and will decrease turbine efficiency.

Moisture Protection

As steam expands through the turbine both the pressure and temperature are reduced. On most condensing and some non-condensing exhaust applications, the steam crosses the saturation line thereby introducing moisture into the steam path. The water droplets which are formed strike the buckets and can cause erosion of the blades. In addition, as the water

FIG. 15-8

Multi-Valve Inlet

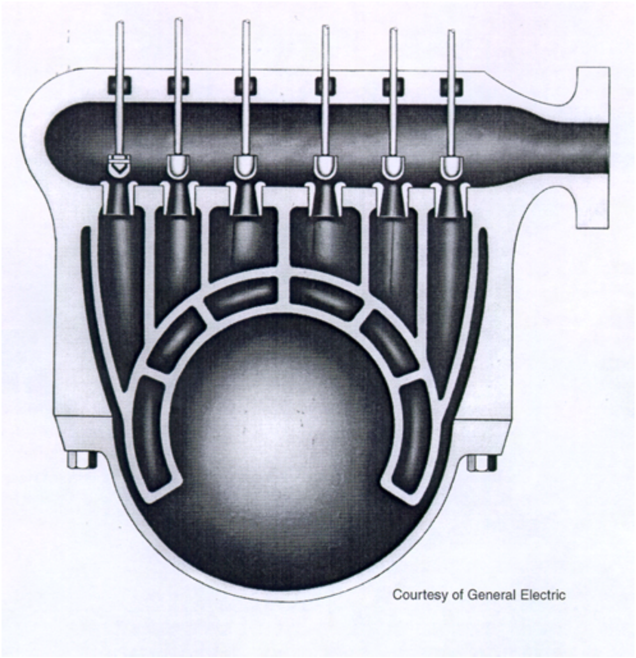
Courtesy of General Electric

FIG. 15-9

Multi-Valve vs Single-Valve Performance Characteristic (Typical Non-Condensing Turbine) Turbine Pressure Ratio = 8.0

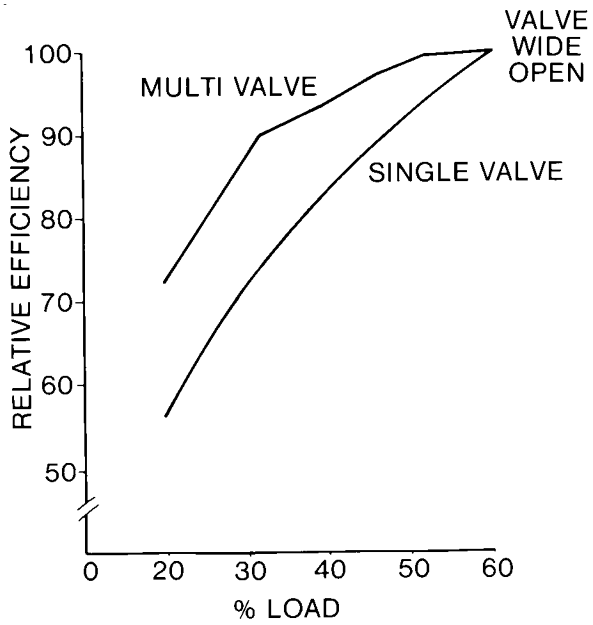

FIG. 15-10

Single Valve with Hand Valves Performance Characteristic (Typical Non-Condensing Turbine) Turbine Pressure Ratio = 8.0

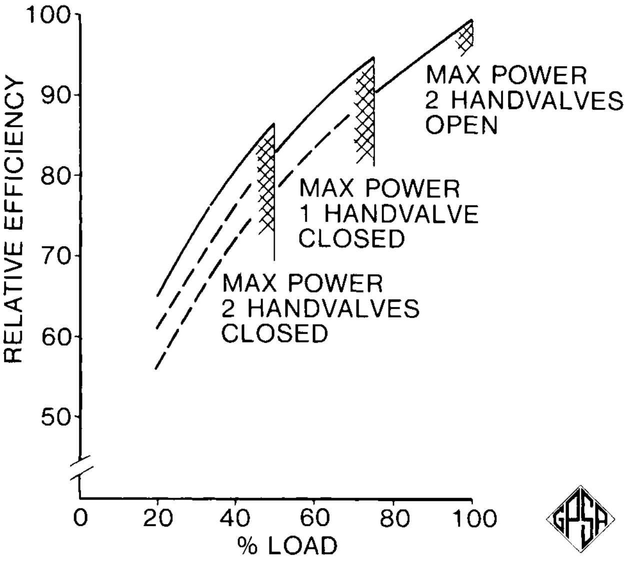

is centrifuged from the blades, the water droplets strike the stationary components, also causing erosion. Where the moisture content is greater than 4%, moisture separators, which are internal to the turbine, can be used to remove a large percentage of the moisture, improving the turbine efficiency and reducing the impact erosion on the buckets. Stainless steel moisture shields can also be used to minimize the impact erosion of the stationary components.

Control Systems

Mechanical governors were the first generation control systems employed on mechanical drive turbines. Shaft speed is sensed by a fly-ball governor with hydraulic relays providing the input to the control valve. A second generation control system was developed and utilized analog control circuitry with the fly-ball governor replaced by speed pick-ups and the hydraulic relays with electronic circuit boards. A third generation control system was developed and replaced the electronic circuitry with digital logic. A microprocessor is used and the control logic is programmed into the governor. The major advantage of this system is the ability to utilize two governors simultaneously, each capable of governing the turbine alone. If the primary governor incurs a fault, the back-up governor assumes control of the turbine and provides diagnostic information to the operator.

EFFICIENCY

Factors Affecting Efficiency

The objective of the steam turbine is to maximize the use of the available steam energy where the available steam energy is defined as the difference between the inlet and exhaust energies (enthalpies) for a 100% efficient constant entropy (i.e., isentropic) process. There are numerous loss mechanisms which reduce the efficiency from the isentropic such as throttling losses, steam leakage, friction between the steam and the nozzles/buckets, bearing losses, etc. Efficiency can range from a low of 40% for a low horsepower single-stage turbine to a high approaching 90% for a large multistage, multi-valve turbine.

Techniques to Improve Efficiency

Various techniques are employed to maximize turbine efficiency, each designed to attack a specific loss mechanism. For example, the number of stages utilized can range from the fewest possible to develop the load reliably to the thermodynamically optimum selection. Spill bands can be utilized to minimize throttling losses. High efficiency nozzle/bucket profiles are available to reduce friction losses. Exhaust flow guides are available to reduce the pressure within the exhaust casing.

The specific features employed on a given application are usually based on the trade-off between capital investment and the cost to produce steam over the life of the turbine.

Operation at Part Load

Most equipment driven by steam turbines are centrifugal machines where horsepower varies as the cube of speed. Part load efficiency varies as a function of speed, flow, and the number of stages. By assuming horsepower to vary as the cube of speed the turbine part load efficiency can be approximated as a percentage of the design efficiency (Fig. 15-11).

EXAMPLES

Figs. 15-11 through 15-19 and 24-37 and 24-38 allow estimates to be made of steam rate, turbine efficiency, number of stages, and the inlet and exhaust nozzle diameters. The following examples illustrate the use of these figures:

FIG. 15-11

Part Load Efficiency Correction Factor vs Percent Power Multi-Valve Steam Turbines

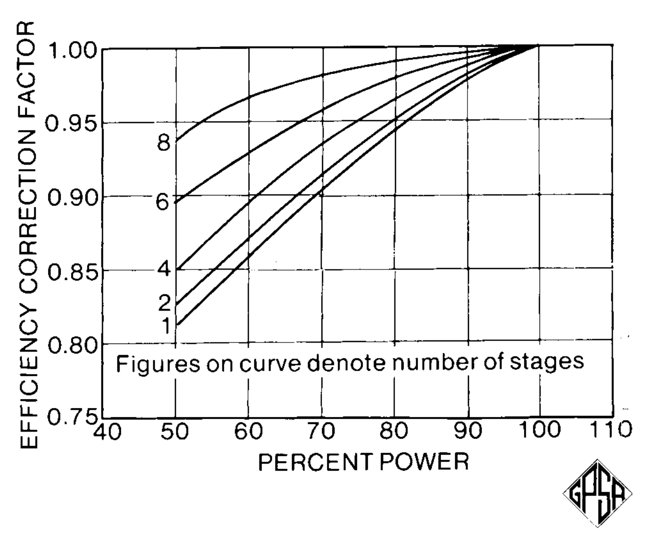

FIG. 15-12

Basic Efficiency of Multi-Valve, Multi-Stage Condensing Turbines

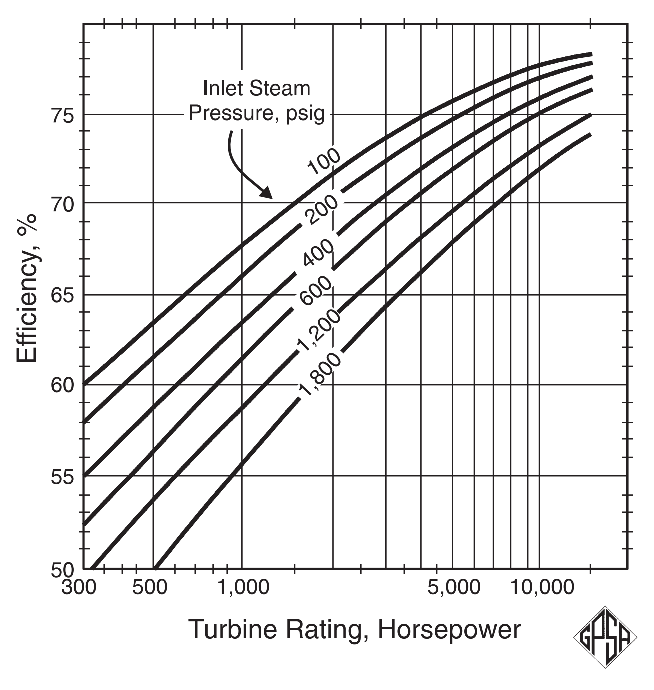

Example 15-1 — Given a steam turbine application with the following characteristics:

Inlet Pressure	600 psia
Inlet Temperature	750°F
Exhaust Pressure	2 psia
Required Horsepower	6000
Speed	7000 rpm

Determine

The actual steam rate (ASR)

The inlet and exhaust nozzle diameters

The approximate number of stages

The steam rate at a partial load of 4000 hp and 6100 rpm

Solution Steps

Using Figs. 24-37 and 38, the theoretical steam rate (TSR) may be determined from the difference in the inlet enthalpy and the theoretical exhaust enthalpy (i.e. isentropic exhaust enthalpy), but first the inlet and exhaust states should be confirmed. Fig. 24-38 for superheated steam indicates that the inlet is superheated (i.e., 750°F is above the saturation temperature of 486.2°F), and gives an inlet entropy of 1.6109 Btu/(lb • °F). From Fig. 24-37, for saturated steam at the turbine exhaust pressure of 2 psia absolute, the liquid and vapor entropies are 0.1750 and 1.9200 Btu/(lb • °F). Since the inlet entropy is within this range, the theoretical exhaust must be two-phase. Had the exhaust-vapor entropy been equal to the inlet entropy, the exhaust would be single-phase vapor (i.e. at its dewpoint). Had the exhaust-vapor entropy been below the inlet entropy, the assumed two-phase exhaust would have been incorrect and Fig. 24-38 instead of 24-37 would be applicable.

FIG. 15-13

Basic Efficiency of Multi-Valve, Multi-Stage Non-Condensing Turbines

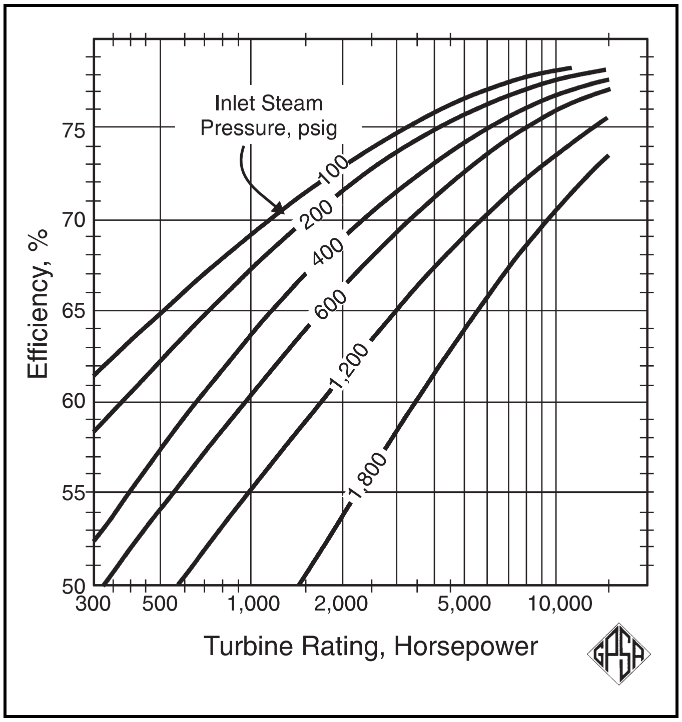

Inlet conditions at 600 psia and 750°F (the average of the values at 700°F and 800°F on Fig. 24-38):

$$s = 1.6109 \text{ Btu/(lb} \bullet \text{°F)}$$

$$h = 1379.4 \text{ Btu/lb}$$

Exhaust conditions at 2.0 psia:

$$s_f = 0.1750 \text{ Btu/(lb} \bullet \text{°F)}$$

$$s_g = 1.9200 \text{ Btu/lb} \bullet \text{°F)}$$

$$h_f = 94.03 \text{ Btu/lb}$$

$$h_g = 1116.2 \text{ Btu/lb}$$

FIG. 15-14

Superheat Efficiency Correction Factor for Condensing Turbines

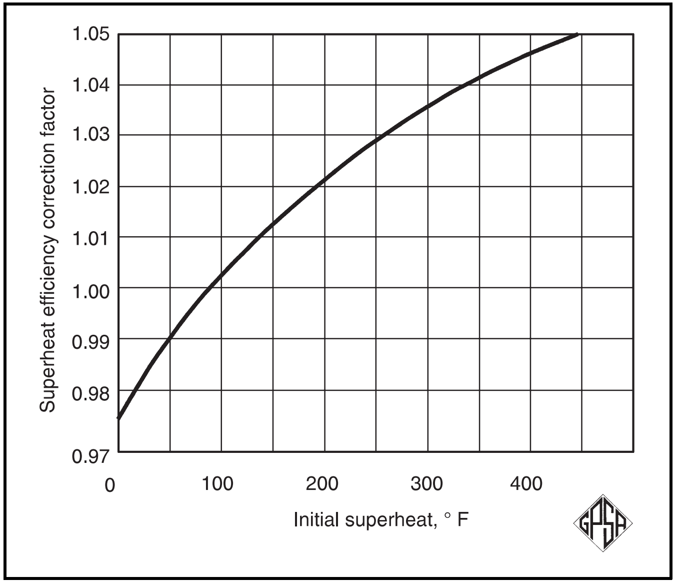

FIG. 15-15

Superheat Efficiency Correction Factor for Non-Condensing Turbines

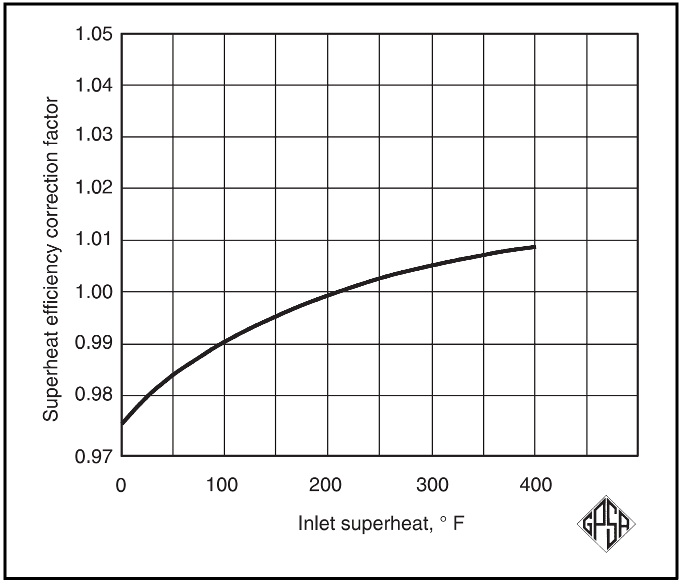

Letting x equal the liquid fraction in the exhaust, and equating the inlet and exhaust entropies:

$$1.6109 = x(0.1750) + (1 - x)(1.9200)$$

$$x = 0.1771$$

$$1 - x = 0.8229 \text{ (vapor fraction in the exhaust)}$$

$$\text{Exhaust enthalpy} = (0.1771)(94.03) + (0.8229)(1116.2)$$

$$= 935.2 \text{ Btu/lb}$$

$$\text{Enthalpy change} = 935.2 - 1379.4$$

$$= -444.2 \text{ Btu/lb}$$

Substituting Btu = (hp • hr) /2544:

Enthalpy change = (-444.2/2544) = (-1/5.727)(hp • hr)/lb

TSR = the absolute value of the inverse of the enthalpy change

= 5.727 lb/(hp • hr)

Basic efficiency = 0.729 (Fig. 15-12)

Inlet saturation temperature = 486.2°F (first column Fig. 24-38)

Inlet superheat = 750 - 486 = 264°F

Superheat efficiency-correction factor = 1.03 (Fig. 15-14)

Speed efficiency-correction factor = 0.957 (Fig. 15-16)

Corrected efficiency = (0.729)(1.03)(0.957) = 0.719

ASR = 5.727/0.719 = 7.97 lb/(hp • hr)

F = (6000 hp) 7.97 lb/(hp • hr)

= 47,800 lb/hr

The inlet and exhaust diameters may be estimated from the equation:

$$D = \sqrt{\frac{(0.051)(F)}{(\rho v)}} \qquad \textbf{Eq 15-1}$$

A reasonable rule of thumb for maximum velocity of the inlet steam is 150 (ft/sec).

$$\rho = 0.88 \text{ lb/ft}^3 \text{ @ } 600 \text{ psia and } 750°\text{F}$$

$$D = \sqrt{\frac{(0.051)(47{,}800)}{(0.88)(150)}}$$

$$D = 4.3 \text{ in.}$$

A 4 in. NPS (minimum) inlet nozzle would be selected.

For exhaust sizing a maximum steam velocity of 450 ft/sec is a reasonable rule of thumb.

$$\rho = 0.0057 \text{ lb/ft}^3 \text{ @ } 2 \text{ psia}$$

$$D = \sqrt{\frac{(0.051)(47{,}800)}{(0.0057)(450)}}$$

$$D = 30.8 \text{ in.}$$

A 30 in. exhaust nozzle would be selected.

The number of stages may be estimated using Fig. 15-18. Drawing a horizontal line from the 7000 RPM indicates that between 1.5 and 2 stages per 100 Btu/lb of available energy would be acceptable.

Available Energy (theoretical)(i.e., the isentropic enthalpy change calculated above)

= 444.2 Btu/lb

FIG. 15-16

Speed Efficiency Correction Factor for Condensing and Non-Condensing Turbines

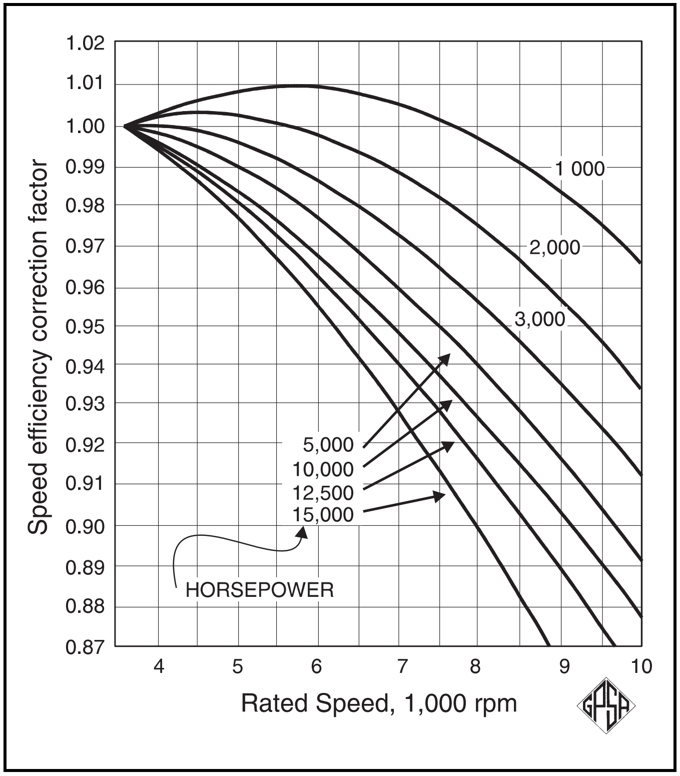

FIG. 15-17

Pressure Ratio Efficiency Correction Factor, Non-Condensing Turbines

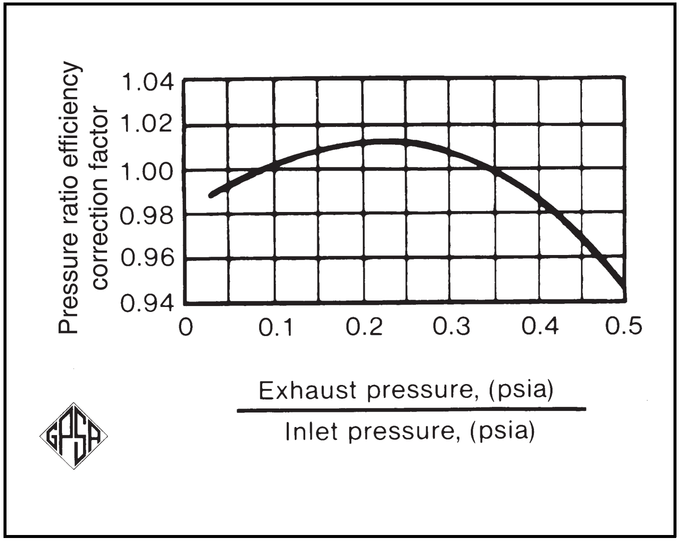

Number of Stages

$$= \frac{(1.5)\,(444)}{(100)} = 7 \text{ (approximately)}$$

or, Number of Stages

$$= \frac{(2)\,(444)}{(100)} = 9 \text{ (approximately)}$$

Nine stages would provide increased efficiency but at additional cost.

At partial load of 4000 hp and 6,100 RPM and assuming seven stages from Fig. 15-11, a part load efficiency factor of approximately 0.96 is obtained. From Fig. 15-12, the basic efficiency at 4000 hp and 6,100 RPM is estimated to be 0.71.

$$\text{Efficiency} = (0.96)\,(0.71) = 0.68$$

$$\text{Actual Steam Rate} = 5.73/0.68 = 8.43 \text{ lb/(hp} \bullet \text{hr)}$$

$$F = (4000)\,(8.43) = 33{,}700 \text{ lb/hr}$$

Example 15-2 — Determine the ASR and total steam requirements for a multi-stage turbine and a single-stage turbine at the following conditions:

Inlet Pressure	250 psig
Outlet Pressure	100 psig
Inlet Temperature	500°F
Horsepower	900 hp
Speed	5000 rpm

Solution Steps

For a multi-stage turbine:

Examining Figs. 24-37 and 38 in the same way as in Example 15-1, the turbine inlet is superheated, and the exhaust is two-phase.

FIG. 15-18

Stages Required per 100 Btu/lb of Available Energy as a Factor of Normal Turbine Speed

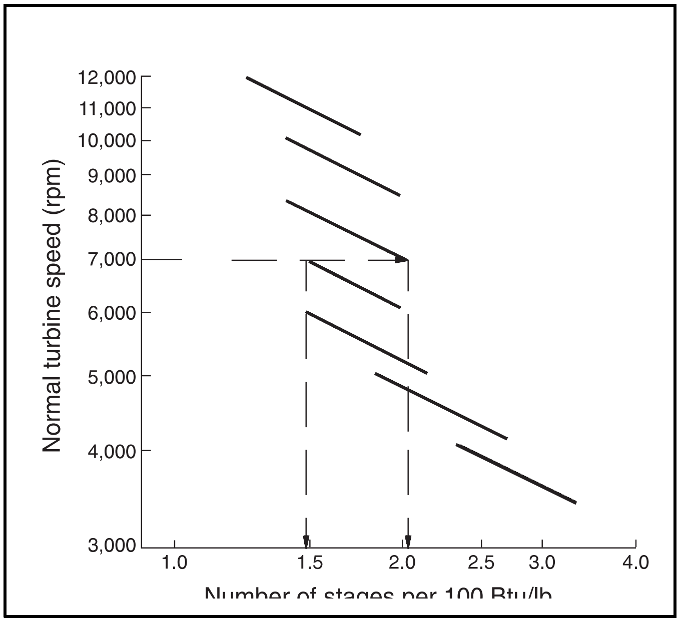

Inlet conditions at 250 psig (264.7 psia) and 500°F (interpolating linearly between 240 and 260 psia on Fig. 24-38):

$$s = 1.5873 \text{ Btu/(lb} \bullet \text{°F)}$$

$$h = 1261.8 \text{ Btu/lb}$$

Exhaust conditions at 100 psig (i.e. 114.7 psia). From Fig. 24-37 interpolating linearly between 89.64 psia at 320°F and 117.99 psia at 340°F, get the following for 114.7 psia:

$$s_f = 0.4872 \text{ Btu/(lb} \bullet \text{°F)}$$

$$s_g = 1.5918 \text{ Btu/(lb} \bullet \text{°F)}$$

$$h_f = 308.9 \text{ Btu/lb}$$

$$h_g = 1189.5 \text{ Btu/lb}$$

Letting x equal the liquid fraction in the exhaust, and equating the inlet and exhaust entropies:

$$1.5873 = x(0.4872) + (1\text{–}x)(1.5918)$$

$$x = 0.0041$$

$$1\text{–}x = 0.9959 \text{ (fraction vapor in exhaust)}$$

$$\text{Exhaust enthalpy} = (0.0041)(308.9) + (0.9959)(1189.5) = 1185.9$$

$$\text{Enthalpy change} = 1185.9 - 1261.8 = -75.9 \text{ Btu/lb}$$

Substituting 1 Btu = (hp • hr) /2544:

$$\text{Enthalpy change} = (-75.9/2544) = (-1/33.5)(\text{hp} \bullet \text{hr})\,/\text{lb})$$

FIG. 15-19

Single-Stage Application

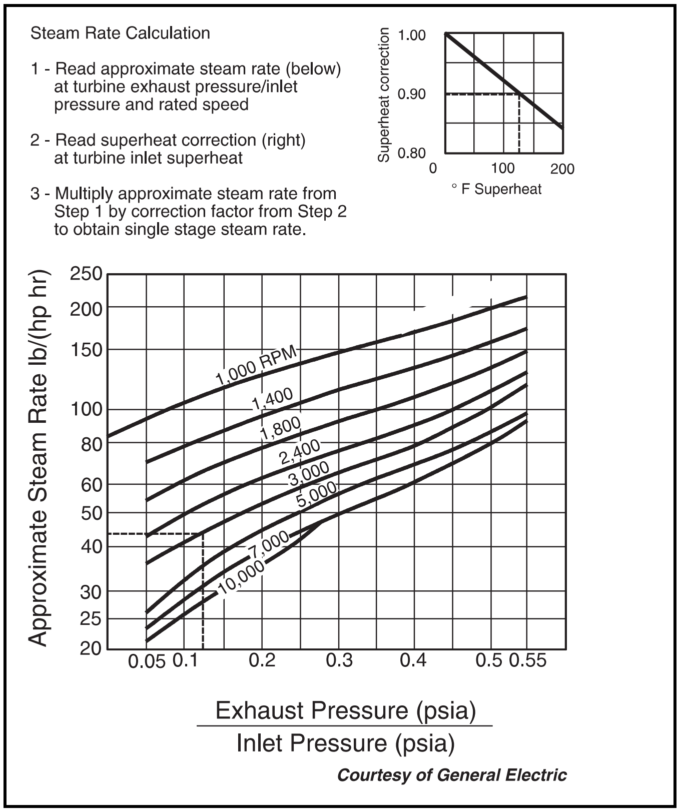
Steam Rate Calculation

1 - Read approximate steam rate (below) at turbine exhaust pressure/inlet pressure and rated speed

2 - Read superheat correction (right) at turbine inlet superheat

3 - Multiply approximate steam rate from Step 1 by correction factor from Step 2 to obtain single stage steam rate.

Courtesy of General Electric

TSR = the absolute value of the inverse of the enthalpy change

= 33.5 lb/(hp • hr)

Basic efficiency = 66% (Fig. 15-13)

Inlet saturation temperature = 406.0 °F (interpolating between 260 and 280 psia on Fig. 24-38)

Inlet superheat = 500 - 406 (Fig. 24-38) = 94°F

Efficiency-correction factor for superheat = 0.99 (Fig. 15-15)

Efficiency-correction factor for speed = 1.01 (Fig. 15-16)

Pressure ratio = (114.7 psia)/(264.7 psia) = 0.433

Efficiency-correction factor for pressure ratio = 0.97 (Fig. 15-17)

ASR = [33.5 lb/(hp • hr)]/[(0.66) (0.99) (1.01) (0.97)]

= 52.3 lb/(hp • hr)

F = [52.3 lb/(hp • hr)] (900 hp)

= 47,100 lb/hr

For a single-stage turbine

ASR = [75 lb/(hp • hr)] (0.93) (Fig. 15-19)

= 70 lb/(hp • hr)

F = [70 lb/(hp • hr)] (900 hp)

= 63,000 lb/hr

Mechanical Drive Gas Turbines

GENERAL

Gas turbines are extensively used in all phases of the gas industry as a source of shaft power. They are used to drive compressors, generators, and other equipment required to produce, process, and transport natural gas. The main advantages of gas turbines are:

- Compact, light weight design
- Minimal maintenance
- Short installation time

Compact, Lightweight Design

The compact, lightweight design of gas turbines makes them ideally suited for offshore platform installations, portable generating sets, remote sites, or any application where size and weight are important considerations.

Maintenance

Once installed, the gas turbine requires a minimum of routine maintenance. It is important to monitor the operating parameters of the turbine (pressures, temperatures, speed, vibration levels, etc.). This can often be done by an operator at a location remote from the actual turbine installation.

FIG. 15-20

Typical Gas Turbine Skid Layout

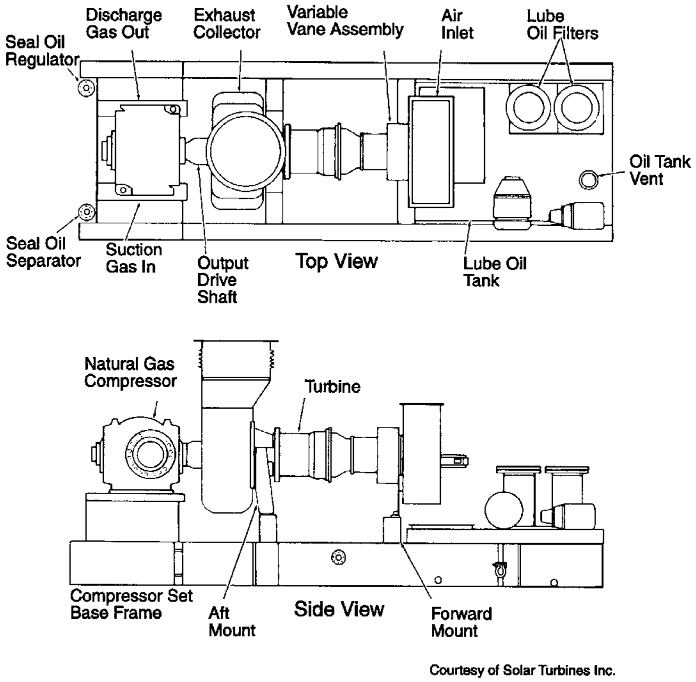

Courtesy of Solar Turbines Inc.

Installation

The relatively light weight, compact size, and simple design of gas turbines make them an attractive choice where power must be quickly installed in the field. The gas turbine is often delivered on an integral one-piece baseplate with all auxiliary equipment installed and tested by the manufacturer. Thus, construction and start-up time are minimized.

GAS TURBINE TYPES

The gas turbine was first widely used as an aircraft power plant. However, as they became more efficient and durable, they were adapted to the industrial marketplace. Over the years the gas turbine has evolved into two basic types for high-power stationary applications: the industrial or heavy-duty design and the aircraft derivative design.

Heavy Duty

The industrial type gas turbine is designed exclusively for stationary use. Where high power output is required, 35,000 hp and above, the heavy duty industrial gas turbine is normally specified. The industrial gas turbine has certain advantages which should be considered when determining application requirements. Some of these are:

- Less frequent maintenance.
- Can burn a wider variety of fuels.
- Available in larger horsepower sizes.

Aircraft Derivative

An aircraft derivative gas turbine is based on an aircraft engine design which has been adapted for industrial use. The engine was originally designed to produce shaft power and later as a pure jet. The adaptation to stationary use was relatively simple.

Some of the advantages of the aircraft derivative gas turbines are:

- Higher efficiency than industrial units.
- Quick overhaul capability.
- Lighter and more compact, an asset where weight limitations are important such as offshore installations.

Single Shaft/Split Shaft

Gas turbine designs are also differentiated by shaft configuration. In a single shaft design, all rotating components of the gas turbine are mounted on one shaft. In a split shaft design, the air compressor rotating components are mounted on one shaft, and the power turbine rotating components are mounted on another shaft. The driven equipment is connected to the power turbine shaft. The single shaft design is simpler, requiring fewer bearings, and is generally used where the speed range of the driven equipment is narrow or fixed (as in generator sets). It requires a powerful starting system since all the rotating components (including the driven equipment) must be accelerated to idle speed during the start cycle.

FIG. 15-21

Gas Turbine Internals

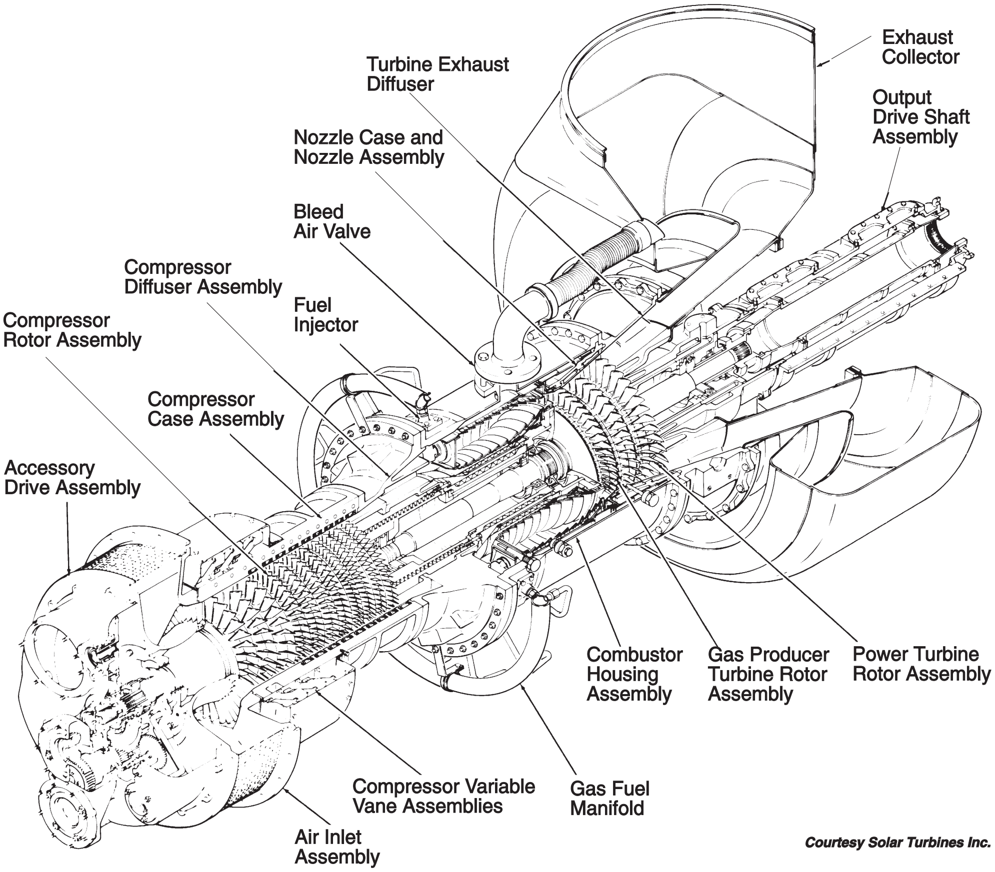

Courtesy Solar Turbines Inc.

A split shaft design is advantageous where the driven equipment has a wide speed range or a high starting torque. The air compressor is able to run at its most efficient speed while the power turbine speed varies with the driven equipment. The split shaft design allows a much smaller starting system since only the air compressor shaft is accelerated during the start cycle.

GAS TURBINE CYCLES

The basic gas turbine cycle is termed the Brayton cycle. The ideal Brayton cycle is a closed cycle consisting of an isentropic compression process; a constant pressure external heating process; an isentropic expansion process; and finally a constant pressure external cooling process which returns the working substance to the inlet state of the compression process. A schematic and TS diagram of the ideal Brayton cycle are shown in Fig. 15-22. The turbomachinery used in the process includes an axial flow or centrifugal compressor and an axial or radial flow turbine.

Simple Open Cycle

The simple open cycle gas turbine takes atmospheric air into the compressor as the working substance. Following compression, the air enters the combustion chamber where the temperature is raised by the combustion of fuel. The gaseous combustion products are then expanded back to the atmosphere through a turbine. A diagram of this cycle is shown in Fig. 15-23. The turbine in this system derives enough power from the high temperature gas to drive both the compressor and load.

Regenerative Ideal Brayton Cycle

The use of a regenerator in an ideal Brayton cycle acts to reduce the amount of available energy lost by external heat exchange. The system schematic is illustrated in Fig. 15-24. This available energy loss is due to irreversible heat input and is illustrated in Fig. 15-25. A heat exchanger or regenerator is placed in the system to transfer heat internally from the hot exhaust gas to the cooler air leaving the compressor. This preheating of the combustion air thus reduces the amount of external heat input needed to produce the same work output.

Combined Cycle

Instead of using the hot exhaust gas for regeneration, this approach uses exhaust gas to generate steam. This steam can be used either as a supplement to the plant steam system or to generate additional horsepower in a Rankine cycle. In the basic Rankine cycle, the hot exhaust gas passes successively through the superheater, evaporator, and economizer of the steam generator before being exhausted to the atmosphere. The steam leaving the boiler is expanded through a steam turbine to generate additional power. The cycle is closed by the addition of a condenser and feed water pump completing a basic Rankine cycle. Since the steam cycle does not require any additional fuel to generate power, the overall thermal efficiency is increased. Fig. 15-26 shows schematically a typical installation and its TS diagrams.

FIG. 15-22

Ideal Brayton Cycle

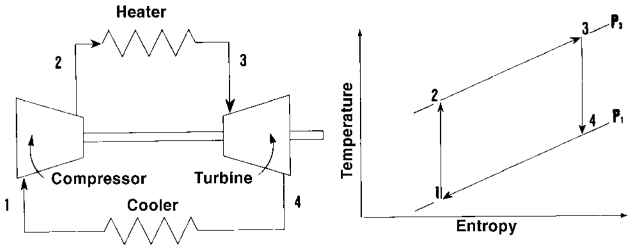

FIG. 15-23

Simple Open Cycle

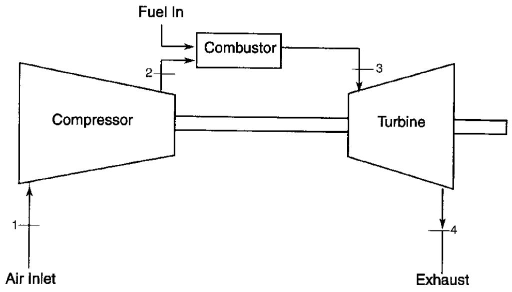

FIG. 15-24

Regenerative Ideal Brayton Cycle

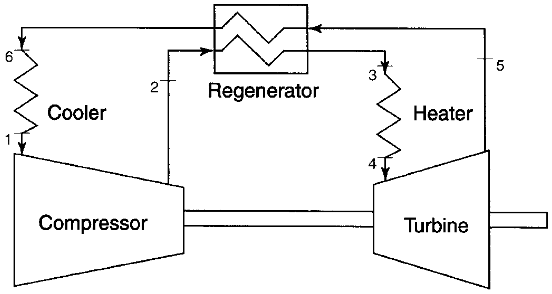

FIG. 15-25

Ideal Brayton Cycle Available Energy

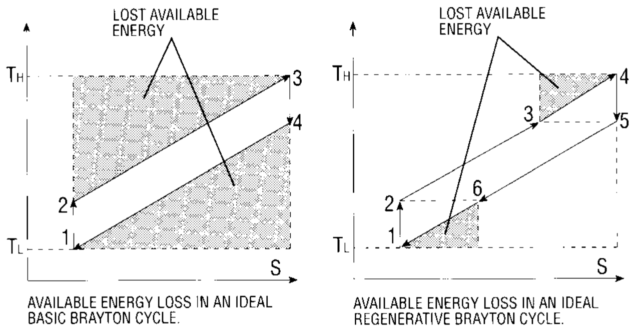

AUXILIARY SYSTEMS

Lube Systems

Two types of oils are used in lubricating gas turbine equipment. They are mineral and fire-resistant synthetic based oils. The oil type used depends on the bearing construction of the particular turbine.

Babbitt type sleeve and thrust bearings, typical of heavy duty turbines, use a mineral based oil. Driven equipment such as compressors, gear, and generators also use this type oil, thus a common, combined lube system can be provided for the train.

Aircraft derivative gas generators all incorporate anti-friction type ball and/or roller bearings. A synthetic oil is used in this service and is provided in a separate system from the mineral oil system used to lubricate the driven equipment. An oil scavenging system is also typical of these gas generators. Engine mounted pumps are used to scavenge oil from the main bearing pumps and return it to the reservoir.

Air Filtration

The primary reason for inlet air filtration is to prevent unwanted dirt from entering the gas turbine. By reducing the contaminants which contribute to corrosion, erosion, and fouling, the gas turbine life is extended. For a more complete discussion of filtration see Section 7.

There are various types of filters. The main types are as follows:

Inertial — This type removes the larger particulates from the inlet air.

Prefilters — These are medium filters usually made of cotton fabrics or spun-glass fibers, used to extend the life of a high efficiency filter further downstream.

Coalescers — These filters are used to remove moisture from the inlet air system.

High Efficiency Media — These filters remove smaller dirt particles from the inlet air.

Marine or Demister — These filters are used in marine environments to remove both moisture and salt.

Self-Cleaning — These filters are composed of a number of high efficiency media filter "banks." Air is drawn through the media at a low velocity and, at a predetermined pressure drop across the system, a reverse blast of air removes built-up dirt on the filter and lowers the pressure drop. This filter can be used in any environment. It is particularly useful in colder

FIG. 15-26

Combined Cycle

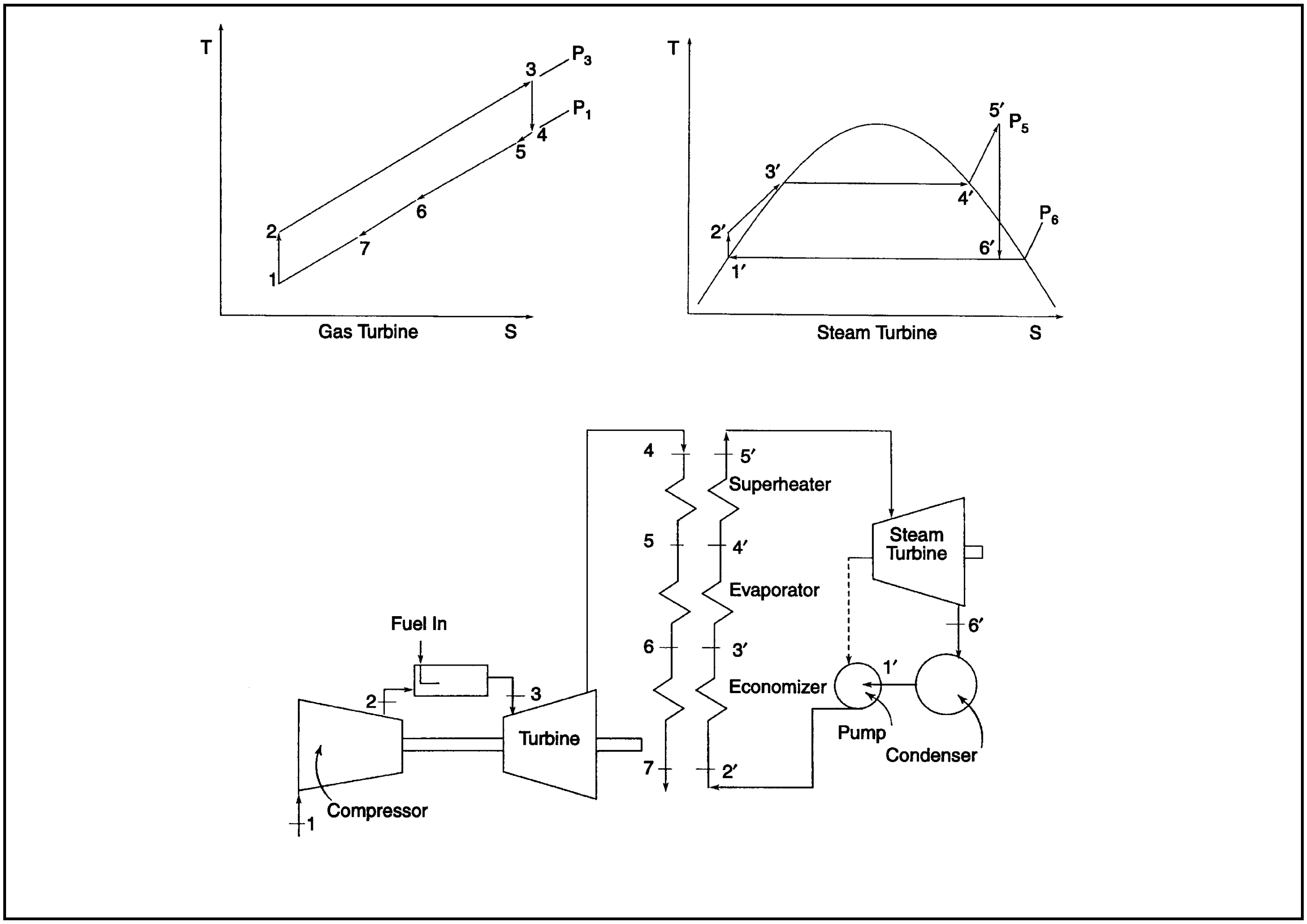

FIG. 15-27

Gas Turbine Air Filtration

Type of Environment	Suggested Filtration
Rural Country	High Efficiency Media
Urban/Industrial	Inertial & High Efficiency Media
Desert	Inertial and Media or Self-Cleaning
Tropical	Inertial & Media
Arctic	High Efficiency Media with Anti-Icing or Self-Cleaning
Offshore	Demisters

climates where ice build-up is a problem. The reverse blast of air also removes any ice that has built up on the filter.

Another method of eliminating icing problems is to install an anti-icing system. In this system, heated air from the gas generator discharge is introduced through distribution manifolds immediately downstream of the inlet air silencer.

The selection of a filtration system is largely dependent on the site location and operating conditions. Fig. 15-27 suggests filtration for various types of environments.

Since filters do protect the gas turbine and help extend its useful life, some type of filtration is always recommended.

Acoustics

The noise created by a gas turbine engine is considerable and must be reduced to protect plant personnel and minimize environmental impact. The main sources of noise in a gas turbine installation are the intake, the exhaust, and casing radiated noise.

The noise associated with the intake is characterized as high frequency noise. This type of noise is the loudest and most disturbing to the ear since it is in a range where hearing is most sensitive. The second most objectionable noise is produced by the gas generator and power turbine and is radiated from the casing. Although the exhaust noise contains more energy, the casing noise is more objectionable since it contains more noise in a frequency range where the ear is most sensitive. The exhaust noise is a low frequency noise which is only slightly audible. It does, however, possess a considerable amount of energy which results in a detectable pressure change.

A variety of methods can be used to attenuate noise. The most common are the use of silencers and enclosures. The inlet noise is the first area considered since this is where the largest amount of sound power is produced. Inlet noise is the loudest directly in front of the inlet opening. Consequently, the least expensive method for obtaining some of the required noise reduction is to place an elbow at the inlet. Additional silencing is usually necessary and can be attained by the use of acoustic baffles before the elbow.

Casing radiated noise can be reduced by using an acoustical enclosure over the turbine. If an enclosure is used, it is necessary to provide gas and fire detection and fire extinguishing equipment inside the enclosure.

The last major source of noise to be silenced is the gas turbine exhaust noise. Since most turbines exhaust vertically, there is generally no need for an elbow. However, a silencer with acoustic baffles is needed and the exhaust ducting should be sound insulated.

Gas Turbine Performance

The performance of a gas turbine is usually expressed in terms of power and heat rate. Power is the net power available at the output shaft of the turbine after all losses and power take-offs have been subtracted.

Heat rate is a measure of thermal efficiency or the amount of heat energy (in the form of fuel) which must be input to the gas turbine to produce the output power. Heat rate is usually expressed in terms of Btu/(hp • hr) or Btu/(kW • hr) based on the lower heating value of the fuel. Heat rate and thermal efficiency are related as follows:

$$\text{Thermal efficiency} = \frac{2544}{\text{Heat Rate, } \frac{\text{Btu (LHV)}}{\text{hp} \bullet \text{hr}}}$$

$$= \frac{3414}{\text{Heat Rate, } \frac{\text{Btu (LHV)}}{\text{kW} \bullet \text{hr}}}$$

Power and heat rate both vary depending on environmental conditions such as ambient air temperature, altitude, barometric pressure, and humidity. Therefore, when performance is stated for a gas turbine, the ambient conditions must be defined. In order to compare different gas turbines, a set of standard conditions known as ISO (International Standards Organization) conditions have been defined as follows:

ISO Conditions: Ambient Temperature = 59°F = 15°C
Altitude = 0 ft (sea level)
Ambient Pressure = 29.92 in. Hg
Relative Humidity = 60%

All gas turbine performance is stated in ISO conditions. To arrive at site rated horsepowers, the ISO conditions must be corrected for the following:

Altitude (Fig. 15-28)
Inlet Losses (Fig. 15-29)
Exhaust Losses (Fig. 15-30)
Temperature (Fig. 15-31)
Humidity (below)

For changing relative humidity, the power output does not change, and the heat rate changes only slightly. For example, for an increase in relative humidity from 60 to 100 percent, a typical correction factor for the heat rate is 1.0016. For a decrease to zero percent, a typical correction factor is 0.9979.

Performance is also affected by other installation variables including power take-offs and type of fuel used. Inlet loss is the pressure drop which occurs as the outside air passes through the inlet filters and plenum. Similarly, exhaust loss is the pressure drop through the exhaust stack, silencers, and heat recovery equipment (if any) which creates a back pressure on the turbine. Power take-offs include any devices such as oil pumps, generators, etc. which are directly driven from the gas turbine output shaft and thus reduce the available output power. Sometimes it is necessary to correct power and/or heat rate for the type of fuel used in the gas turbine. The turbine manufacturer's performance brochure should be consulted for necessary corrections.

The following example shows the method of calculating performance for a gas turbine at site conditions using data typically supplied in the manufacturer's performance brochure.

Example 15-3 — Calculate maximum available site power and heat rate for the example gas turbine at the following conditions:

Turbine ISO Horsepower = 27,500

FIG. 15-28

Altitude Correction Factor

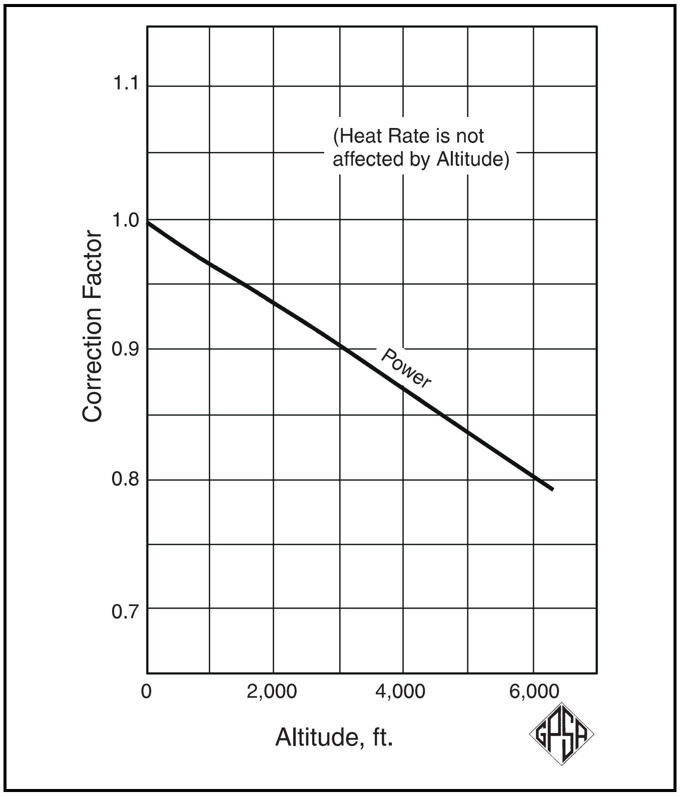

FIG. 15-30

Exhaust Loss Correction Factor

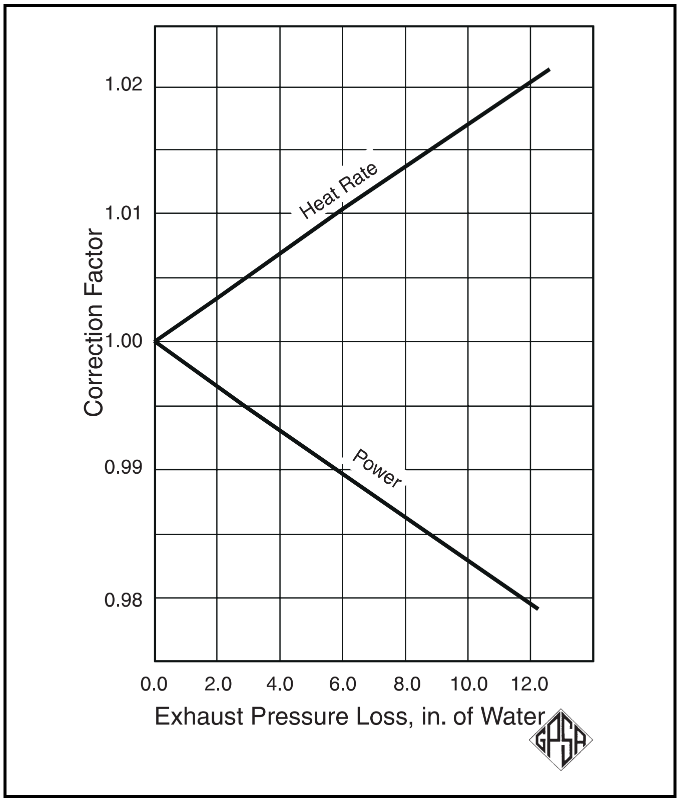

FIG. 15-29

Inlet Loss Correction Factor

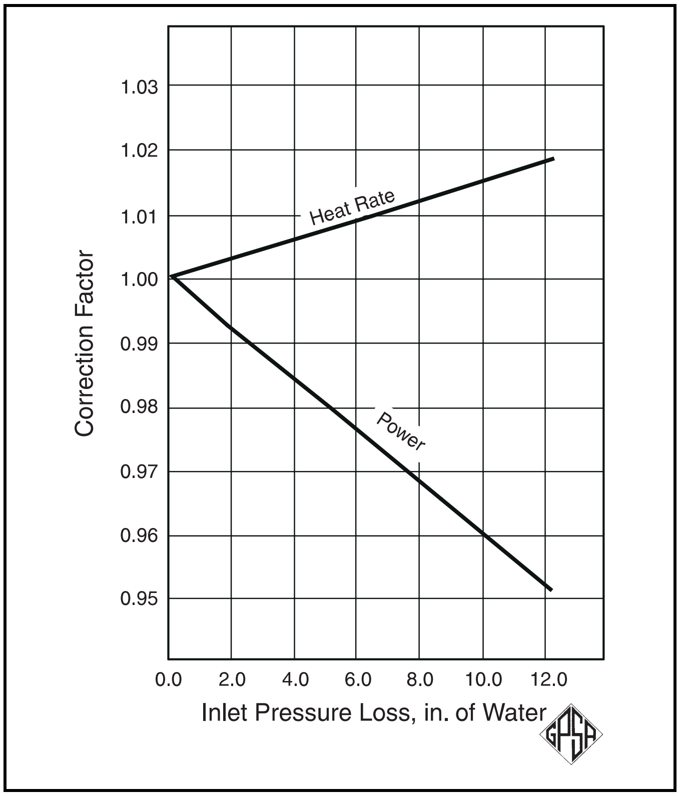

FIG. 15-31

Ambient Temperature Correction Factor

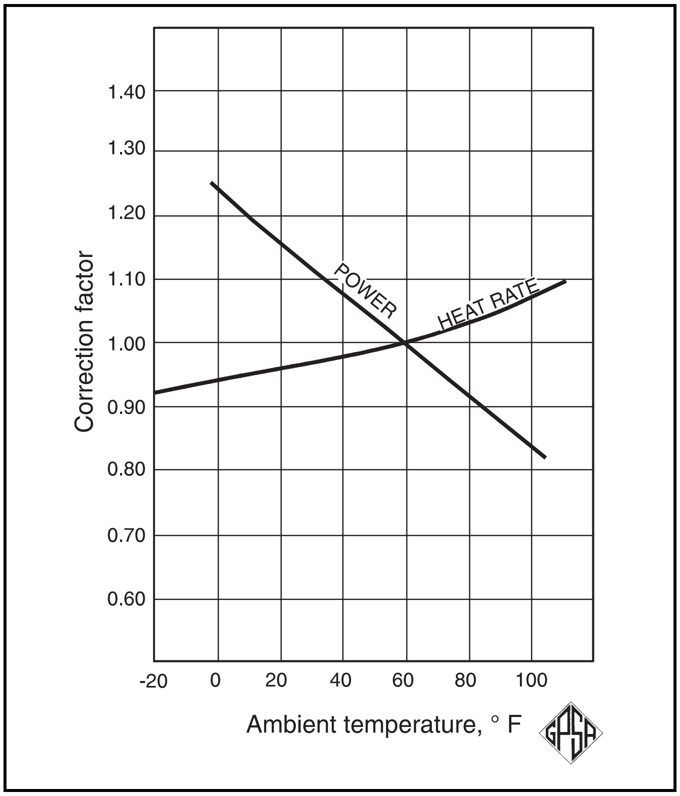

Turbine ISO Heat Rate = 7,090 Btu/(hp • hr)
Ambient Temperature = 80°F
Altitude = 1000 ft (above sea level)
Inlet Pressure Drop = 4 in. H_2O
Exhaust Pressure Drop = 2 in. H_2O
Relative Humidity = 60%
Fuel = Natural Gas

Solution Steps

Find the power altitude correction factor from Fig. 15-28. For 1000 ft altitude, the correction factor is 0.965.

Find power inlet loss correction factor from Fig. 15-29. For 4 inches of water, the correction factor is 0.984.

Find power exhaust loss correction factor from Fig. 15-30. For 2 inches of water, the correction factor is 0.9965.

Find the power ambient temperature correction factor from Fig. 15-31. For 80°F the correction factor is 0.915.

Since relative humidity is 60% and fuel is natural gas, no corrections are required.

Calculate the maximum available site power by multiplying maximum-no-loss power by each of the correction factors.

Power (site) = power (0.965) (0.984) (0.9965) (0.915)
Power (site) = 27,500 (0.965) (0.984) (0.9965) (0.915)
Power (site) = 23,800 hp

For the heat rate find the inlet loss correction factor, exhaust loss correction factor, and ambient temperature correction factor from Figs. 15-29, 15-30, and 15-31, respectively. (Note: Heat rate is not affected by altitude.)

Inlet loss factor = 1.0065
Exhaust loss factor = 1.003
Temperature factor = 1.03

Calculate site heat rate by multiplying no-loss heat rate by the correction factors.

Heat rate (site) = (Heat rate) (1.0065) (1.003) (1.03)
Heat rate (site) = [7090 Btu/(hp • hr)](1.0065)(1.003)(1.03)
Heat rate (site) = 7370 Btu/(hp • hr)

The above calculation procedures may vary slightly with different manufacturers but will follow the same principles.

Basic specifications for some of the commonly used gas turbine engines are shown in Fig. 15-32.

Gas Turbine Emissions

The gas turbine, in general, is a low emitter of exhaust gas pollutants relative to other heat engines in similar service. This is because the fuel is burned with ample excess air to ensure complete combustion at all but minimum load conditions. It is unique in its ability to burn a wide variety of fuels making each application unique in terms of exhaust emissions. However, gas turbine engine emissions recently have become a major factor in the design, selection, and operation of the unit. Various federal, state, and local authorities have issued standards and codes to control pollution of the atmosphere.

Carbon monoxide (CO) emissions occur because of incomplete combustion of fuel carbon. CO emissions for distillate and other liquid fuels are generally higher than for natural gas.

Unburned hydrocarbons (UHC) are formed by the incomplete combustion of fuel. Like CO emissions, they are directly related to combustion efficiency. However, because most gas turbine units on the market today have good combustor designs, the CO and UHC emissions are of secondary importance to NO_x emissions.

Sulfur oxides (SO_x) exhausted from gas turbines are a direct function of sulfur content in the fuel.

The high temperature and oxygen content during combustion tends to favor the formation of SO_3 and SO_2 at equilibrium. Sulfur oxide emissions from pipeline natural gas are virtually zero while wellhead gases, process gases, coal gases, and other fuels may contain significant quantities of sulfur in the form of H_2S.

Gas turbine particulate emissions are influenced by the fuel properties and combustion conditions. Particulates generally refer to visible smoke, ash, ambient non-combustibles, and products of erosion and corrosion in the hot gas path. Particulate and smoke emissions are usually small when burning natural gas, but are a significant consideration when operating on liquid fuels.

Of the exhaust components the most significant are the oxides of nitrogen (NO_x). The amount of NO_x produced is a function of the fuel burned, firing temperature, compressor discharge temperature, and residence time in the combustion zone. Since the trend towards high turbine efficiencies leads to higher pressure ratios and firing temperatures, the emission rates of NO_x are higher for these units.

Nitrogen oxides are categorized into two areas according to the mechanism of formation. NO_x formed by oxidation of free nitrogen in the combustion air or fuel is called "thermal NO_x," while that due to oxidation of organically bound nitrogen in the fuel is referred to as "organic NO_x." As implied by the name, thermal NO_x are mainly a function of the stoichiometric flame temperature. The formation of thermal NO_x is on the order of parts per million (by volume) or ppmv; however, the conversion of organic NO_x is virtually 100%. Efforts to reduce thermal NO_x by reducing flame temperatures have little effect on, and actually may increase, organic NO_x.

UHC emissions can be reduced by proper combustor design for maximum efficiency. Sulfur oxides can be eliminated by removing sulfur compounds from the fuel. Similarly, particulates can be minimized by appropriate fuel treatment. However, reduction of NO_x formation also produces increased inefficiency.

Two general approaches are used for NO_x reduction:

- The use of an inert heat sink such as water or steam injection
- Modifications of fuel-air ratios and combustor design

In addition to these two methods, catalytic combustion is being researched.

Water or Steam Injection — Water or steam injection is an effective way to reduce NO_x exhaust emissions. Two areas of caution in the design of this system must be considered. The first is the dynamic effect that water injection has on the combustion zone in terms of flame stability and dynamic pressures. Inadequate design could adversely affect hardware life. Also the rate of CO emissions increases with the rate of water injection. It is not effective in reducing organic NO_x emissions and may actually contribute to them.

FIG. 15-32

2003 Basic Specifications – Gas Turbine Engines

Model	Power Rating (ISO Rating) hp	Heat Rate (LVH) Btu/hp-hr	Pressure Ratio	Power Shaft RPM	At ISO RATING CONDITIONS		
					Turbine Inlet Temp. °F	Exhaust Flow lb/s	Exhaust Temp °F
Alstom Power							
TYPHOON	6626	7950	13.0	13000	2016	39.6	1013
TORNADO	10288	7593	12.6	10450	1897	64.9	912
CYCLONE	17986	7027	16.8	9500	2300	86.8	1031
GT35C	22885	7925	12.3	6300	1562	204.8	711
GT35C	23287	7760	12.0	3450	1562	202.8	709
GT10B	34102	7250	14.0	7700	–	177.2	1009
GT10C	40392	6820	17.6	6500	–	200.6	964
Dresser-Rand							
DR60	19109	7020	20.1	7900	–	104.5	916
DR61	30982	6785	18.8	5500	–	150.1	986
DR61G	31235	6772	18.8	3600	–	152.1	975
DR61GP	42067	6442	22.2	3600	–	192.2	959
DR61P	42067	6276	22.3	6200	–	186.1	955
DR63G	59335	5941	28.5	3600	–	282.2	824
GE Aero-Energy Products							
LM1600 (PA)	19110	7016	20.2	7900	–	104.3	916
LM2000 (PE)	24300	7117	16.0	3600	–	1056.0	894
LM2500 (PE)	30400	7017	18.1	3000	–	1177.3	993
LM2500 (PK)	40044	6702	22.6	3000	–	1144.2	966
LM6000 (PC)	60000	5938	29.1	3600	–	1056.0	894
GE Power Systems, GE Oil & Gas							
PGT5	7295	9500	8.6	10290	–	56.9	991
PGT10	14295	7950	13.8	7900	–	93.3	910
GE10	15675	7810	15.2	7900	–	103.4	903
PGT16	19120	7020	20.1	7900	–	104.5	919
PGT25	31200	6750	17.9	6500	–	151.9	977
PGT25+	42060	6180	21.5	6100	–	185.8	932
LM6000	60000	5980	28.5	3600	–	280.0	853
MS3002R	14520	7300	7.3	6500	–	117.1	698
MS3002	15140	9500	7.1	6500	–	117.1	1008
MS5002R	35600	6990	8.7	4670	–	276.7	693
MS5002C	38005	8700	8.8	4670	–	274.0	963
MS5002D	44680	8410	10.8	4670	–	311.7	950
MS6001B	58380	7650	11.9	5111	–	319.7	1011
MS7001EA	115330	7700	12.5	3600	–	661.4	1000
GE Power Systems							
M3142R(J)	14520	7386	7.3	6500	–	116.8	698
M3142(J)	15140	9500	7.1	6500	–	116.8	1008
M5261(RA)	26400	9380	7.5	4860	–	202.8	988
M5322R(B)	32000	7068	8.2	4670	–	251.3	666
M5352(B)	35000	8828	8.6	4670	–	271.2	916
M5352R(C)	35600	6990	8.7	4670	–	266.8	693
M5382(C)	38000	8701	8.9	4670	–	277.8	959
M6581(B)	58380	7650	12.0	5111	–	308.6	1011
M7121(EA)	115630	7722	11.9	3600	–	659.2	999
Kawasaki Heavy Industries, Ltd.							
S2A-01	915	12189	8.5	1500/1800	–	11.2	885
M1A-13	2081	9976	9.4	1500/1800	–	17.6	968
M1A-13D	2083	10078	9.5	1500/1800	–	17.4	986
M1T-13	4097	10137	9.4	1500/1800	–	35.5	968

Data reproduced by permission from Diesel & Gas Turbine Worldwide Catalog, courtesy of Diesel & Gas Turbine Publications.

FIG. 15-32 (Cont'd.)

2003 Basic Specifications – Gas Turbine Engines

Model	Power Rating (ISO Rating) hp	Heat Rate (LVH) Btu/hp-hr	Pressure Ratio	Power Shaft RPM	At ISO RATING CONDITIONS		
					Turbine Inlet Temp. °F	Exhaust Flow lb/s	Exhaust Temp °F
M1T-13D	4104	10229	9.5	1500/1800	–	35.1	986
M7A-01	7607	8342	12.7	1500/1800	–	48.0	1013
M7A-01D	7245	8450	12.7	1500/1800	–	48.0	1008
M7A-01ST	8956	7481	12.7	1500/1800	–	48.9	981
M7A-02	9531	8120	15.9	1500/1800	–	59.5	972
M7A-02D	9276	8162	15.9	1500/1800	–	59.5	955
L20A	24138	7260	18.0	1500/1800	–	127.4	1013
MAN Turbomaschinen AG GHH Borsig							
THM1203A	8046	10871	7.8	7800	1724	77.6	959
THM1203AR	7711	7951	7.8	7800	1724	77.6	–
THM1304-9	12069	8835	9.6	8600	1760	99.0	925
THM1304-10	13008	8715	10.0	8600	1787	99.9	932
THM1304-10R	12606	7012	10.0	8600	1787	99.9	–
THM1304-11	15019	8206	11.3	8600	1823	108.2	941
FT8	34690	6615	19.5	5500	–	188.5	856
FT8 Plus	37940	6580	20.2	5500	–	193.3	898
Pratt & Whitney							
ST6L-721	681	10885	6.8	33000	–	6.6	957
ST6L-795	909	10320	7.4	33000	–	7.1	1092
ST6L-813	1137	10108	8.5	30000	–	8.6	1051
ST18A	2630	8411	14.0	20000	–	17.6	990
ST30	4479	7987	15.0	14875	–	28.7	955
ST40	5416	7689	15.0	14875	–	30.8	1011
FT8	34690	6615	19.5	5500	–	188.5	856
FT8 Plus	37940	6580	20.2	5500	–	193.3	898
Rolls-Royce							
501-KC5	5500	8495	9.4	13600	–	34.2	1060
501-KC7	7400	7902	13.5	13600	–	46.1	968
AVON 2648	20360	8660	8.8	5500	–	169.8	828
AVON 2656	21000	8405	8.8	4950	–	169.8	819
RB211-6556	34900	7100	20.1	4950	–	202.8	910
RB211-6562	39600	6705	20.8	4800	–	208.3	916
RB211-6762	40750	6565	21.5	4800	–	210.5	918
RB211-6761	44500	6290	21.5	4850	–	207.2	937
TRENT 50	70470	5910	35.0	3000/3600	–	341.7	931
TRENT 60	79050	6140	35.0	3000/3600	–	359.6	802
Solar Turbines Incorporated							
Saturn 20	1589	10366	6.2	22300	–	14.3	968
Centaur 40	4694	9104	10.2	15500	–	41.9	842
Centaur 50	6155	8482	10.6	16500	–	41.7	959
Centaur 50L	6303	8206	10.5	14300	–	41.0	950
Taurus 60	7697	7948	12.0	14300	–	47.8	950
Taurus 70	10353	7287	16.8	12000	–	58.9	923
Mars 90	13222	7651	16.5	9500	–	88.6	869
Mars 100	15006	7489	17.6	9500	–	92.2	905
Tital 130	19498	7121	16.4	8850	–	108.0	914
Vericor Power Systems							
ASE 8	704	11764	10.5	1800/1500	1666	7.9	909
ASE 40(VPS3)	4407	9001	8.8	15400	2028	28.2	1108
ASE 50(VPS4)	5064	8313	10.2	16000	1911	31.1	1044

Data reproduced by permission from Diesel & Gas Turbine Worldwide Catalog, courtesy of Diesel & Gas Turbine Publications.

Modification of Fuel-Air Ratio and Combustor Design — An increased number of gas turbines are available with low NO_x design based on modifications to fuel-air ratio and combustor design. NO_x content in flue gas as low as 10–25 ppm can be achieved by this method.

Different vendors have different approaches to effectively control the fuel-air ratio to reduce NO_x content. However, low NO_x, turbines are available, both for single-fuel and dual-fuel systems from most vendors.

Low NO_x designs make the gas turbines more complex, especially for dual-fuel systems. It is therefore recommended to carefully review the need for dual-fuel low NO_x machines.

In summary, the characteristics of gas turbine emissions must be considered for each application, since each is unique to the turbine, installation, fuel, and operation. All these factors are important in matching the gas turbine to the job.

Electric Motors

INTRODUCTION

Electric motor drives offer efficient operation and add flexibility to the design of petroleum refineries, petrochemical plants, and gas processing plants. Electric motors can be built with characteristics to match almost any type of load. They can be designed to operate reliably in outdoor locations where exposed to weather and atmospheric contaminants.

Proper motor application is essential if reliable performance is to be achieved. Critical items to consider are load characteristics for both starting and running conditions, load control requirements, power system voltage and capacity, and any conditions at the plant site that could affect the type of motor enclosure.

A-C MOTOR TYPE AND SELECTION

One of the first considerations in motor selection is to choose between a squirrel cage induction and a synchronous motor. The induction motor has the advantage of simplicity. It is a rugged machine and has an outstanding record for dependability. In general it can accelerate higher load inertias than synchronous motors and usually will do so in less time. Induction motor control is simple and no excitation equipment is required. Its principal disadvantages are that it operates at lagging power factor and has higher inrush (starting) current. Up to about 5000 horsepower, induction motors are normally preferred. Above this, induction and synchronous motor costs converge, and synchronous motors are often chosen.

The constant-speed synchronous motor has inherent advantages that often make it the logical choice for industrial drive applications at lower power ratings. Load speed can be exact. Torque characteristics of the motor can be varied by design to match the requirements of the driven load and the available power supply. Starting, pull-in, and pull-out torques can be selected over a wide range. Power factor improvement is available with rated power factor of unity, leading, or even lagging.

ELECTRICAL SYSTEM

Induction Motors

In general, induction motors tend to draw more starting current at a lower power factor than synchronous motors of the same size and speed. This results in a greater voltage drop on the system when the motor is started. If the motor is driving a high inertia load, such as a fan or compressor, the lower terminal voltage will increase the temperature rise of the squirrel cage winding during acceleration. As a rule of thumb, voltage drops on starting greater than 20% may require special motor designs. These designs may reduce the full load efficiency of the motor during normal operation by one or two percent. It is best to furnish a power supply that will limit the voltage drop to 20% or less when starting the largest motor on a fully loaded bus.

Once started the induction motor is a stable machine. Most motors can easily ride through a 25 to 30% dip in system voltage caused by external faults or switching. Overall system stability and continuity may be achieved by using large induction motors. This is, however, accomplished at the expense of lower power factor and efficiency.

Synchronous Motors

The synchronous motor is usually easier to start than an induction machine. The system voltage drop on starting is less for a given horsepower motor. However, synchronous motors have less thermal capacity in their windings and may be more severely taxed when accelerating high inertia loads.

Once synchronized and running, synchronous motors present special system problems. They may tend to pull out of synchronism on voltage dips that induction motors can ride through. A gradually increasing load from zero to 125% of rated load will be easily accommodated. A suddenly applied load of 125% can easily cause the motor to pull out of synchronism with the electrical system.

When applying large synchronous machines to a system it is important to perform a transient load study. This will help ascertain if the electrical system is capable of supporting the motor demands under transient conditions.

Speed

3000 to 3600 rpm — Synchronous motors are seldom economical for this range because of the high cost of rotor construction. Although large (i.e., greater than 22,000 hp) two-pole 3600 rpm synchronous motors have been built, slower speed motors with step-up gears, or squirrel-cage induction motors are usually a more economic choice.

900 to 1800 rpm — Synchronous motors above 5000 hp are widely used for pumps and for centrifugal compressors with speed increasers. The need for power-factor correction, high efficiency, low inrush, or constant speed may favor synchronous motors below 5000 hp.

For applications above 2500 hp requiring speed increasers, 1200 rpm unity-power-factor synchronous motors should be evaluated against 1800 rpm motors since the lower-speed motors are slightly more energy efficient. For 1200 rpm loads, synchronous motors may be more economical at 1250 hp and above. For 900 rpm loads, synchronous motors should be considered at 1000 hp and above.

Motor requirements below 500 hp in the 900 to 1800 rpm speed range are normally handled by standard induction motors.

514 to 720 rpm — Synchronous motors are often selected above 1 hp per rpm, such as 800 hp at 720 rpm, 700 hp at 600 rpm, and 600 hp at 514 rpm.

Below 514 rpm — The synchronous motor should be considered for sizes down to 200 hp because of higher efficiency, improved power factor, and possible lower cost. At high voltages (4 kV and above), the synchronous motor becomes more economical at even lower horsepowers.

Motor Voltage

The proper selection of voltage for a given motor drive can vary from a routine procedure to a complex study requiring a complete electrical system analysis. In many instances the in-plant distribution system is well established at a particular voltage, say 2300 (2.3 kV). The new machine may be small compared to available system capacity on the 2.3 kV bus so no problem is involved in purchasing a standard motor of that voltage. In more complicated cases additional substation capacity may be necessary to accommodate the new machine. However, when very large units are to be added, many factors must be considered. A new distribution voltage level, a new transmission line, or a higher voltage transmission from the electric utility might be necessary.

MOTOR ENCLOSURES

Motor enclosure selection should be predicated upon the environmental conditions under which the motor must operate. Directly related to this is the amount of maintenance required to provide long-term reliability and motor life. In general, the more open the enclosure is to the atmosphere, the lower the first cost of the machine but the higher the maintenance costs that may be necessary. Enclosures frequently used in a-c motors are listed below.

Drip-Proof

These are generally used only indoors or in enclosed spaces not exposed to severe environmental conditions. Maintenance requirements will depend upon general cleanliness of the location and any chemical contaminants in the area.

Weather-Protected Type I

This is the least costly outdoor machine. It is essentially a drip-proof guarded motor with heaters and outdoor bearing seals and is very susceptible to weather and atmospheric contamination. Considerable maintenance may be required to ensure satisfactory winding and bearing life.

Weather-Protected Type II

This is the more commonly used outdoor enclosure. It is more expensive than the WP-I but minimizes the entrance of water and dirt. Maintenance is less than for WP-I types. Chemical contaminants in gaseous form may be carried into a WP-II machine with the ventilating air and attack parts that are vulnerable to them.

Totally Enclosed Forced Ventilated (TEFV)

TEFV enclosures can be used indoors or outdoors in dirty or hazardous environments. Since the motor cooling air is piped in from a separate source the influx of dirt and gaseous contaminants is minimized. Maintenance is minimal depending upon the cleanliness of the cooling air.

Totally Enclosed Water-to-Air Cooled (TEWAC)

The totally enclosed water-to-air cooled machine uses an air to water heat exchanger to remove heat generated by motor losses. It is the quietest enclosure available and will usually result in the lowest maintenance costs. It will breathe during shutdown but often a breather filter is used to remove particulate contaminants. It is more efficient than a TEFC motor because it does not have the external fan to drive. Its first cost

FIG. 15-33

Energy Evaluation Chart
NEMA Frame Size Motors, Induction

HP	Approx. Full Load RPM	Amperes Based on 460V		Efficiency in Percentage at Full Load	
		Standard Efficiency	High Efficiency	Standard Efficiency	High Efficiency
1	1,800	1.9	1.5	72.0	84.0
	1,200	2.0	2.0	68.0	78.5
1-1/2	1,800	2.5	2.2	75.5	84.0
	1,200	2.8	2.6	72.0	84.0
2	1,800	2.9	3.0	75.5	84.0
	1,200	3.5	3.2	75.5	84.0
3	1,800	4.7	3.9	75.5	87.5
	1,200	5.1	4.8	75.5	86.5
5	1,800	7.1	6.3	78.5	89.5
	1,200	7.6	7.4	78.5	87.5
7-1/2	1,800	9.7	9.4	84.0	90.2
	1,200	10.5	9.9	81.5	89.5
10	1,800	12.7	12.4	86.5	91.0
	1,200	13.4	13.9	84.0	89.5
15	1,800	18.8	18.6	86.5	91.0
	1,200	19.7	19.0	84.0	89.5
20	1,800	24.4	25.0	86.5	91.0
	1,200	25.0	24.9	86.5	90.2
25	1,800	31.2	29.5	88.5	91.7
	1,200	29.2	29.1	88.5	91.0
30	1,800	36.2	35.9	88.5	93.0
	1,200	34.8	34.5	88.5	91.0
40	1,800	48.9	47.8	88.5	93.0
	1,200	46.0	46.2	90.2	92.4
50	1,800	59.3	57.7	90.2	93.6
	1,200	58.1	58.0	90.2	91.7
60	1,800	71.6	68.8	90.2	93.6
	1,200	68.5	69.6	90.2	93.0
75	1,800	92.5	85.3	90.2	93.6
	1,200	86.0	86.5	90.2	93.0
100	1,800	112.0	109.0	91.7	94.5
	1,200	114.0	115.0	91.7	93.6
125	1,800	139.0	136.0	91.7	94.1
	1,200	142.0	144.0	91.7	93.6
150	1,800	167.0	164.0	91.7	95.0
	1,200	168.0	174.0	91.7	94.1
200	1,800	217.0	214.0	93.0	94.1
	1,200	222.0	214.0	93.0	95.0

is greater than WP-II but less than TEFC, excluding any additional capital cost for a cooling water system. Operating costs are higher because of the necessity to continuously supply it with cooling water.

Totally Enclosed Fan Cooled (TEFC)

This is the highest degree of enclosure for an air cooled machine. In large sizes, the TEFC motor has an air-to-air heat exchanger. Internal motor air is recirculated around the outside of the tubes while outside air is driven through the tubes by a shaft driven fan. These motors are quite expensive especially in large sizes because of the high volume of cooling air required relative to motor size. These motors are indicated for use in very dirty or hazardous locations.

The TEFC enclosure minimizes the maintenance required for these very dirty applications. However, the machines will breathe when shut down and vapor and gaseous contaminants can be drawn into them. TEFC motors are usually noisy because of the large external fan.

Explosion-Proof

An explosion-proof machine is a totally enclosed machine whose enclosure is designed and constructed to withstand an internal explosion. It is also designed to prevent the ignition of combustibles surrounding the machine by sparks, flashes, or explosions which may occur within the machine casing.

THE INDUCTION GENERATOR

The induction generator can be used as a convenient means of recovering industrial process energy that would otherwise be wasted. Excess steam or compressed gas can often drive such a generator to convert useless energy to valuable kilowatts.

An induction generator is simply an induction motor driven above its synchronous speed by a suitable prime mover. This results in production rather than consumption of electric energy. Normally the induction generator does not differ in any aspect of electrical or mechanical construction from an induction motor. Only the operating speed range separates one mode of behavior from the other.

Important differences exist between the induction generator and the more widely used synchronous generator. These are basically the same as the differences between induction and synchronous motors. Besides low cost and simplicity of control an important benefit is that the induction machine is instantly convertible from generator to motor operation or vice versa.

The synchronous generator needs precise prime-mover speed control to maintain its output at correct frequency. When connected to a public utility system such a machine cannot be allowed to deviate more than a fraction of a cycle from rated frequency without being tripped off the line. However, speed changes do not affect the voltage or power output of the generator — only the frequency.

For the induction machine, voltage and frequency remain constant, set by the connected power system, whatever the driven speed. The speed change does directly affect the power output of the generator and therefore the temperature of its windings. Unless other machines are coupled into the same drive to dampen speed swings, close control of rpm is almost as necessary to the induction generator as to the alternator.

Smaller generators (down to 300 kW) are finding many uses. Among them:

- Recovering energy of compression on the downhill side of a natural gas pipeline.
- Producing electric power from the expansion of geothermal steam.
- Generating power through expansion of compressed gases in cryogenic production.
- Recovering energy from single-stage waste steam turbines in the 5-175 psig inlet pressure range.

SPEED VARIATION

Because of the continuing increase in the cost of electric energy, variable speed drives offer an economical means of reducing energy requirements in many areas of operation.

Variable Frequency Electric Motors

For many years variable speed applications relied on either d-c motors or a constant speed a-c motor coupled to various mechanical systems to provide the range of speeds required. Solid-state electronics provide an effective means of speed control for a-c motors by changing the frequency of the electrical signal. They can be used with both induction and synchronous motors.

A standard a-c motor operating at 60 hertz will operate at a constant speed, depending upon the number of magnetic poles it has in accordance with the formula:

$$\text{rpm} = \frac{120\text{f}}{\text{P}} \qquad \textbf{Eq 15-2}$$

However, if the input frequency can be varied in accordance with the speed requirements, then a wide range of speeds can be obtained. For example, with a frequency range from 50 to 120 hertz, a 4-pole motor has a speed range from 1500 through 3600 rpm.

Fixed Speed Electric Motors With Fluid Couplings

The speed of an equipment item driven by a fixed-speed electric motor can be varied with a fluid coupling. This is essentially a pump discharging to a power-recovery turbine, both in the same casing. The pump is connected to the driver shaft and the turbine to the driven shaft. The turbine speed is varied by varying the amount of fluid in the casing. Increasing the fluid increases the circulation between the pump and turbine, thereby increasing the speed of the turbine. A fluid coupling costs less than electronic speed control but is less efficient. For example, the typical efficiency for electronic speed control is about 92–95% from minimum to normal speed, but for a fluid coupling is about 95% at normal speed, and can range from 50 to 70% at 50% speed, depending on the coupling make and type.

Internal Combustion Engines

Internal combustion engines are classified according to the type of fuel used and the method of fuel ignition. Many subclassifications are used to describe engines according to their speed, cycle arrangements, mechanical configuration, and other design characteristics.

ENGINE TYPES

Spark ignition and compression ignition are the two methods of initiating combustion used in reciprocating internal combustion engines. In practice the ignition method also defines the fuels or range of fuels used.

Spark Ignition

Natural gas, liquefied petroleum gas (LPG), or gasoline are the fuels used in spark ignition engines. They are often referred to as gas engines or gasoline engines and resemble in appearance (except perhaps for size) and operation the engines used in automobiles. High voltage electrical energy fires one or more spark plugs per cylinder to ignite the air/fuel mixture. Most spark ignition engines can be easily modified to burn any of the above fuels. Often the fuel delivery system is the only part of the engine requiring significant changes.

Compression Ignition (Diesel)

Engines that use heat of compression as the ignition source are almost always referred to as diesel engines. A broad range of liquid fuels can be burned in a diesel engine provided proper attention is paid to the handling and preparation of the fuel as well as to the design of the engine. The type and quality of the fuel can have a significant effect on the service life of the engine. Diesel fuels are classified under an ASTM designation D-975. This specification covers limits for three grades of fuel which can be purchased commercially (Fig. 15-34). Engine manufacturers may also publish limits for the fuels they recommend be used in specific engines.

Dual-Fuel

Dual-fuel engines may operate in one of two modes. One mode is as an ordinary diesel engine. It may also operate on a gaseous fuel with a pilot injection of liquid diesel fuel for ignition. The pilot fuel provides less than 10% of the total fuel energy at full load.

Four-Stroke-Cycle

Most spark ignition engines use a four-stroke-cycle which is completed in two crankshaft revolutions and consists of the following piston strokes:

1. An intake stroke to draw the fuel/air mixture into the engine cylinder.
2. A compression stroke which raises the pressure and temperature of the mixture.
3. The expansion or power stroke from the ignition and combustion of the fuel mixture.
4. An exhaust stroke to free the cylinder of combustion products.

The four cycle diesel engine operates in a similar fashion. During the intake stroke only air is introduced into the cylinder. Compression of air alone causes a higher temperature to be reached in the cylinder. The fuel is injected into the cylinder at the very beginning of the expansion stroke and spontaneously ignites.

Two-Stroke-Cycle

The four cycle engine requires two revolutions of the crankshaft for each power stroke. To get a higher output from the same size engine, the two-stroke-cycle was developed. This cycle is applicable both to compression ignition and spark ignition engines. The two-stroke-cycle is completed in one revolution of the crankshaft and consists of two piston strokes: the compression stroke and the expansion stroke. Combustion air intake occurs at the end of the expansion and the beginning of the compression stroke. Ignition and combustion occurs at the end of the compression and beginning of the expansion stroke.

Supercharged Engines

A supercharged engine has a compressor to increase the density of the combustion air before it is inducted into the cylinder. Supercharging increases the power output from a given cylinder size by increasing the engine mean effective pressure.

Two types of supercharging are common: mechanical compressors driven by an engine auxiliary output shaft or a separate prime mover and exhaust turbine driven compressor which obtains its power from expansion of the engine exhaust. This later type of supercharger is commonly called a turbocharger.

Speed

Most process plant engines are used to drive equipment with a limited range of speed requirements, and which can be selected to operate near the point of highest efficiency. Speed increasing or decreasing gears may be used to match an engine with a particular service. Internal combustion engines are classified according to speed in the following broad categories:

High speed — above 1500 rpm
Medium speed — 700 to 1500 rpm
Low speed — below 700 rpm

High speed engines can offer weight and space advantages but will usually require more maintenance than a medium or low speed engine. High speed engines are often selected for standby or intermittent applications. As a general rule the lower the speed the longer the service life. Although internal combustion engines are usually selected to run over a limited speed range, they will operate well over large ranges of speed just as an automobile engine does.

PERFORMANCE RATING

Several measurements of performance can be used to compare engines. Four commonly used measurements are:

1. Specific fuel consumption, (lb or Btu)/(bhp • hr)
2. BMEP, psi
3. Specific weight, lb/bhp
4. Output per unit of displacement, bhp/cu in.

The relationship between brake mean effective pressure (BMEP) and brake horsepower (bhp) is given below.

$$\text{BMEP} = \frac{(\text{bhp})\,(33{,}000)}{(\text{S})\,(\text{A})\,(\text{N})} \qquad \textbf{Eq 15-3}$$

The value of N is equivalent to RPM for two-stroke-cycle engines, and RPM divided by two for four-stroke cycle. BMEP indicates how much turbocharging increases the brake horsepower which is the power delivered to the driven equipment by the engine output shaft.

The intended use of the engine will determine the most important measure of performance. For an aircraft engine the first and third items may be the most important; while for a stationary engine in continuous service with no space or weight limitations, the first item would be of primary importance.

The power delivered is directly related to atmospheric conditions. Operation in areas of low atmospheric pressure (high altitudes) will reduce the power output. High inlet air temperature will also reduce the power output. Engines are rated for various altitudes above sea level (i.e. barometric pressures) and ambient temperatures (e.g. 1500/3000 feet and 90°F according to DEMA; 1500 feet and 85°F; and so forth). A rule of thumb for derating naturally aspirated engines is 3-1/2% reduction in power for each 1000 ft above the rating altitude, and 1% reduction for every 10°F above the rating temperature. For exact deration of naturally aspirated engines, or for turbocharged engines, the manufacturers must be consulted.

Following are gas-engine design parameters. The values vary considerably depending on the engine type, make and model, and on the site conditions, but ranges of typical values are given.

- Fuel-gas requirements (i.e. heat rate) [6500 to 8500 Btu/(bhp • hr), LHV].
- Heat rejection at the power-end exhaust manifold [1500 to 3000 Btu/(bhp • hr) with jacket water cooling, or 800 to 1500 without].
- Heat rejection at a turbo aftercooler if applicable [100 to 500 Btu/(bhp • hr)].
- Heat rejection at the lube-oil cooler [300 to 900 Btu/(bhp • hr)].

New technologies have reduced specific weights (i.e. lb/bhp), increased fuel efficiencies, lengthened the periods between overhauls, and reduced emissions. Precisely programmed electronically controlled fuel injection incorporates ambient and other important operating conditions to minimize fuel consumption and emissions over full operating ranges. Many engine designs include pre-combustion chambers that jet flames into the main combustion chambers effectively igniting leaner air/fuel mixtures (i.e. "lean burn") resulting in higher efficiencies and lower emissions. New thermal-barrier coatings (TBCs) insulate many engine components from thermal shock and reduce heat losses that would otherwise decrease thermal efficiencies.

FIG. 15-34

Grades of Diesel Fuel, ASTM D-975 (1995) Classification

	1-D	2-D	4-D
Flash point, °F Min	100	125	130
Carbon Residue, % Max	0.15	0.35	–
Water and Sediment, % by Vol Max	0.05	0.05	0.50
Ash, % by Wt Max	0.01	0.01	0.10
Distillation °F			
90% Pt Max	550	640	–
Min	–	540	–
Viscosity at 104°F			
Centistokes Min	1.3	1.9	5.5
Max	2.4	4.1	24.0
Sulfur, % by Wt	0.05	0.05	2.0
Cetane No. Min	40	40	30
Aromaticity, % by Vol Max	35	35	–

Engine Energy Balance

A gas engine converts the combustion energy in the fuel to mechanical power and heat. The combustion energy is usually distributed as follows:

	% Range
Mechanical power	30–40
Heat rejected to cylinder cooling	25–40
Heat rejected to oil cooler	3–5
Heat rejected to turbo aftercooler	4–9
Heat rejected to exhaust	25–30
Heat rejected to atmosphere (i.e. surface heat loss)	3–6

The mechanical power is the sum of the brake horsepower (bhp) (i.e. available shaft power), and the power to drive such engine auxiliaries as a lube-oil pump, cooling-water pump, radiator fan, and alternator (for a spark ignition engine).

Fig. 15-35 includes engine power ratings, specific fuel requirements (i.e., "heat rates"), heat rejections and exhaust conditions for a variety of gas engines. The values are based on full design operating power at the speeds noted for various altitudes above sea level and ambient temperatures.

An engine's power efficiency, typically called "thermal efficiency," is calculated from the following equation:

$$\%\ \text{Thermal Efficiency} = \frac{100 \times 2544}{\text{Heat Rate (Btu/(bhp}\bullet\text{hr), LHV)}}$$

The total heat rejected is calculated from the following equation:

$$\text{Heat Rejected} = (\text{Heat Rate} - 2544)\ \text{Btu/(bhp}\bullet\text{hr)}$$

The heat rejected to the engine exhaust gas is calculated from the following equation:

Exhaust Heat Btu/(bhp • hr) = Total heat rejected minus the sum of the heat rejected to cylinder cooling, oil cooling, turbo aftercooling, and engine-surface heat loss to the atmosphere

It is technically feasible to recover part of the heat. Low temperature heat at about 180°F, for such as space heating, can be recovered from the cooling circuits for cylinder jackets, lube oil and turbo charged air. Higher level heat at above 300°F can be recovered by heat exchange with engine exhaust. Below 300°F water vapor will condense with CO_2 absorption, acid formation, and resulting corrosion. A heat recovery arrangement is illustrated in Fig. 15-36. Technical feasibility depends upon the economic criteria and improves as the engine size increases. Heat recovery can increase the overall thermal efficiency to as high as 75%. For example, an engine's thermal efficiency can be increased from a typical regular value of 33% to 75% by recovering about 60% of the heat normally rejected to the coolant and exhaust.

FIG. 15-35

Engine Ratings and Operating Parameters

Note: Figures may be approximate due to variations in engine services and are representative of new engines only. Refer to manufacturer for exact information.

						Heat Rejection Btu / (bhp · hr)					
							Cylinder Cooling				
ENGINE	Full Power at Full Speed (bhp)	Full Speed (rpm)	Strokes Per Cycle	BMEP (psi)	Fuel Reqmt (Btu/(bhp·hr)) LHV	Jacket Water Cooler	Oil Cooler	Turbo Intercooler/ Aftercooler	Atmosphere i.e. Surface Heat Loss	Exhaust rate (lb/(bhp·hr)	Exhaust temp (F)
Caterpillar											
G3406TA	325	1800	4	Not Avail.	7103	2803	Note (1)	157	284	6.60	964
G3408TA	400	1800	4	Not Avail.	7485	3250	Note (1)	68	283	6.55	925
G3412TALE	637	1800	4	Not Avail.	7541	2705	Note (1)	354	302	9.34	838
G3508TALE	633	1400	4	Not Avail.	7619	2275	Note (1)	410	302	9.86	847
G3512TALE	945	1400	4	Not Avail.	7570	2159	Note (1)	412	270	10.02	860
G3516TALE	1265	1400	4	Not Avail.	7548	2217	Note (1)	391	252	9.71	869
G3606TALE	1775	1000	4	Not Avail.	6781	606	305	449	237	11.73	867
G3608TALE	2370	1000	4	Not Avail.	6761	606	304	445	237	11.69	865
G3612TALE	3550	1000	4	Not Avail.	6761	616	304	449	237	11.71	858
G3616TALE	4735	1000	4	Not Avail.	6736	608	303	433	236	11.65	864
Note: (1) The heat rejected to the oil cooler is included with that to the jacket-water cooler.											
Cummins											
G/GTA5.9	152	2200	4	Not Avail.	7382	2473	Not Avail.	319	279	Not Avail.	Not Avail.
G/GTA8.3	200	1800	4	Not Avail.	7964	2394	Not Avail.	256	299	Not Avail.	Not Avail.
G/GTA855	304	1800	4	Not Avail.	7910	2506	Not Avail.	317	283	Not Avail.	Not Avail.
KTA19GC	420	1800	4	Not Avail.	7376	2011	Not Avail.	340	Not Avail.	Not Avail.	Not Avail.

Dresser-Rand											
412KVSR	2600	330	4	139	7100	1850	325	800	Not Avail.	11.90	750
410KVR	3750	350	4	170	6450	850	350	550	Not Avail.	11.30	750
510TLAD	4000	300	2	122.4	6850	Not Avail.	Not Avail.	Not Avail.	Not Avail.	Not Avail.	Not Avail.
512KVR	4500	350	4	170	6450	850	350	550	Not Avail.	11.30	760
612TCV	5600	330	2	122.9-130.8	6700	Not Avail.	Not Avail.	Not Avail.	Not Avail.	Not Avail.	550
612TCVC	7150	330-345	2	133.4-133.9	6700	Not Avail.	Not Avail.	Not Avail.	Not Avail.	Not Avail.	550

FIG. 15-35 (Cont'd.)

Engine Ratings and Operating Parameters

Note: Figures may be approximate due to variations in engine services and are representative of new engines only. Refer to manufacturer for exact information.

						Heat Rejection Btu / (bhp · hr)					
							Cylinder Cooling				
ENGINE	Full Power at Full Speed (bhp)	Full Speed (rpm)	Strokes Per Cycle	BMEP (psi)	Fuel Reqmt (Btu/(bhp·hr)) LHV	Jacket Water Cooler	Oil Cooler	Turbo Intercooler/ Aftercooler	Atmosphere i.e. Surface Heat Loss	Exhaust rate (lb/(bhp·hr)	Exhaust temp (F)
Waukesha											
F18GL	400	1800	4	160	7524	1980	325	485	211	9.36	874
H24GL	530	1800	4	160	7800	2147	323	547	188	10.26	851
L36GL	800	1800	4	160	7129	1839	238	421	144	9.14	838
P48GL	1065	1800	4	160	7106	1892	233	422	134	9.12	836
F2895GL	607	1200	4	138	7282	1960	329	395	264	10.81	700
F3521GL	738	1200	4	138	7377	2003	306	373	253	10.90	703
F3524GSI	840	1200	4	158	7825	2435	337	149	410	6.64	1135
L5108GL	1072	1200	4	138	7295	1926	354	368	275	10.78	680
L5790GL	1215	1200	4	138	7284	1967	329	398	239	10.03	679
L5794GSI	1380	1200	4	158	7650	2275	355	110	473	6.41	1135
L7042GL	1478	1200	4	138	7274	1905	291	367	222	10.75	709
L7044GSI	1680	1200	4	158	7876	2318	337	107	432	6.73	1181
P9390GL	1963	1200	4	138	7221	1750	316	387	182	10.19	763
8LAT27GL	2090	1000	4	190	6556	1187	280	510	125	11.98	677
12VAT27GL	3130	1000	4	190	6568	1238	239	569	90	11.04	703
16VAT27GL	4500	1000	4	205	6583	719	290	539	204	12.21	776
Wartsila											
12V34SG-CD (1)	5,552	750	4	252	5,780	725 (2)	295	233 (3)	94	9.82	779

Example 15-4 —Calculate the thermal efficiency, total heat rejected, and total exhaust heat for a Waukesha L7042GL at 1200 RPM, 77°F and sea level, and its full power rating.

Solutions Steps

From Fig. 15-35

Full Power = 1478 bhp

Heat rate = 7274 Btu/(bhp • hr), LHV

Heat rejected to water cooling, oil cooling, turbo intercooling, and radiation = 1905 + 291 + 367 + 222 = 2785 Btu/(bhp • hr)

Therefore:

Thermal efficiency $= \frac{100 \text{ x } 2544}{7274} = 35.0\%$

Heat rejected per bhp = 7274 – 2544 = 4730[Btu/(bhp • hr)

Total heat rejected = 4730 [Btu/(bhp • hr)] 1478 bhp = 7.0 MMBtu/hr

Exhaust heat per bhp = 4730 – 2785 = 1945 Btu/(bhp • hr)

Total exhaust heat = 1945 [Btu/(bhp•hr)] 1478 bhp = 2.87 MMBtu/hr

Auxiliaries

BEARINGS

Hydrodynamic journal bearings are found in all types of industrial turbomachinery, which include pumps, electric motors, steam turbines, electric generators, and gas compressors. The hydrodynamic bearing types most commonly found in turbomachinery are:

- Plane cylindrical
- Pressure dam
- Tilting pad

For all bearing types, the fundamental geometric parameters are journal diameter, pad arc angle, length-to-diameter ratio, and running clearance. Some bearing types, such as tilting pad bearings, have additional geometric variations including number of pads, preload, pad pivot offset angle, and orientation of the bearing (on or between pads). The key operating conditions are oil viscosity, oil density, rotating speed, gravity load at the bearing, and applied external loads (such as gear mesh or pump volute loadings). A machinery expert should be consulted for further details concerning types of bearings and their applications and designs.

GEARS

There are many different types of open gears such as spur, helical, spiral bevel, and worm. This section will focus on enclosed high speed helical gear reducers or increasers commonly used in the natural gas, refinery, and petrochemical industries.

Speed Increasers and Reducers

Speed increasers are usually used on centrifugal compressors, axial compressors, blowers, and centrifugal pumps driven by motors, turbines, and industrial combustion engines. Speed reducers are used on reciprocating compressors, rotary positive displacement compressors, centrifugal pumps, generators, and fans driven by turbines and motors.

High Speed Gears

High-speed gears are generally defined as having either or both of the following:

1. Pinion speed of at least 2,900 rpm.
2. Pitch line velocities above 5,000 ft/min.

There are units operating with pitch line velocities in excess of 35,000 ft/min and transmitting 30,000 hp.

Gearing

High speed gears can be selected with either single helical gearing (used extensively in Europe) or opposed double helical (i.e., “herringbone”) gearing (predominant in the United States). Pros and cons of each type of gear design are numerous with double helical gearing being more efficient because there is only one thrust bearing required. The thrust bearing is usually on the low speed shaft.

Surface Finish

High speed gears are classified as precision quality gears. Fig. 15-37 shows a minimum surface finish and quality required for various pitch line velocities as recommended in Figure 1, page 14 of AGMA 2001-C95, Fundamental Rating Factors and Calculation Methods for Involute Spur and Helical Gear Teeth.

GEAR RATINGS

Various parameters affecting the durability, strength ratings, and scoring temperatures include:

Horsepower — The horsepower rating of high speed gears is determined from the durability rating and strength rating on the gear or pinion as specified in AGMA 6011-G92, Specifications for High Speed Helical Gear Units. In addition, the rating is limited by the scuffing temperature as determined in accordance with AGMA 217.01, Information Sheet, Gear Scoring Design Guide for Aerospace Spur and Helical Power Gears, and Annex A of AGMA 2001-C95.

Durability — The durability hp rating for a specific gear set is primarily dependent on the speed and allowable contact stress of the gear and does not vary significantly with tooth size. The allowable contact stress is dependent on the surface hardness of the gear or pinion tooth and varies with material composition and mechanical properties.

Strength — The strength hp rating for a specific gear set varies mainly with the speed, allowable fatigue stress of material, and with tooth thickness. The tooth form, pressure angle, filet radius, number of teeth, helix angle, and pitch line velocity also affect the strength horsepower rating.

Allowable fatigue stress is dependent on the tensile strength of the material and varies with heat treatment and chemical composition.

Scuffing Temperatures — The scuffing or flash temperature index is the calculated temperature of the oil in the gear mesh. This temperature is arrived at by calculating the temperature rise of the lubricant in the mesh and adding it to the inlet oil temperature. The temperature rise for a given set of gears increases with the tooth loading, speed, and surface finish (i.e. increasing roughness).

The temperature of the gears will increase as the pitch is decreased, pressure angle is decreased, or helix angle is increased.

Design Factors

The following design factors must be considered for high speed drives.

Housings — must be of rugged design for strength and rigidity to maintain precise alignment of gears and bearings.

Bearings — should be split-sleeve, babbitt lined, steel-backed precision journal bearings with thrust faces for axial loads. Fixed pad or tilting pad (Kingsbury type) should be used where required. Tilt pad radial bearings may also be required for high rpm, high load applications.

Shafts — precision machined from heat treated, high quality alloy (4140 is common) steel. Adequately sized to rigidly maintain gear alignment and protect from overload.

Pinions — normally cut integral with shaft from a high quality forging that is through hardened or surface hardened by carburizing or nitriding. Grinding is the most common finishing method but precision hobbing, shaving, or lapping are also used.

Gears — usually made from a high quality forging that is through hardened or surface hardened by carburizing or nitriding and is separate from the low speed shaft. Gear may be integral with the shaft when operating conditions require. Grinding is the most common finish method but precision hobbing, shaving, or lapping are also used.

Dynamic Balance — balance all rotating elements to assure smooth operation at high rpm.

Seals — shaft seal should be of the labyrinth type, with clearance between shaft and seal of 0.020 to 0.030 inch. To prevent oil leakage through the clearance, the labyrinth is made interlocking with grooves machined in the cap to create air back pressure during rotation to retain the lubricant.

High speed gears are usually used on critical process trains where down time is quite costly and catastrophic failure must be avoided at all costs. Therefore, gear drives are becoming more and more instrumented. Optional monitoring equipment often specified by users include:

- Vibration probes and proximitors (to measure shaft vibration)
- Keyphasors (provide timing and phase reference)
- Accelerometers (measure casing acceleration)
- Direct reading dial type thermometers in stainless thermowells (measure bearing temperature)
- Resistance temperature detectors (RTDs) and thermocouples (measure bearing temperature)

FIG. 15-36

Example Engine Heat Recovery Arrangement

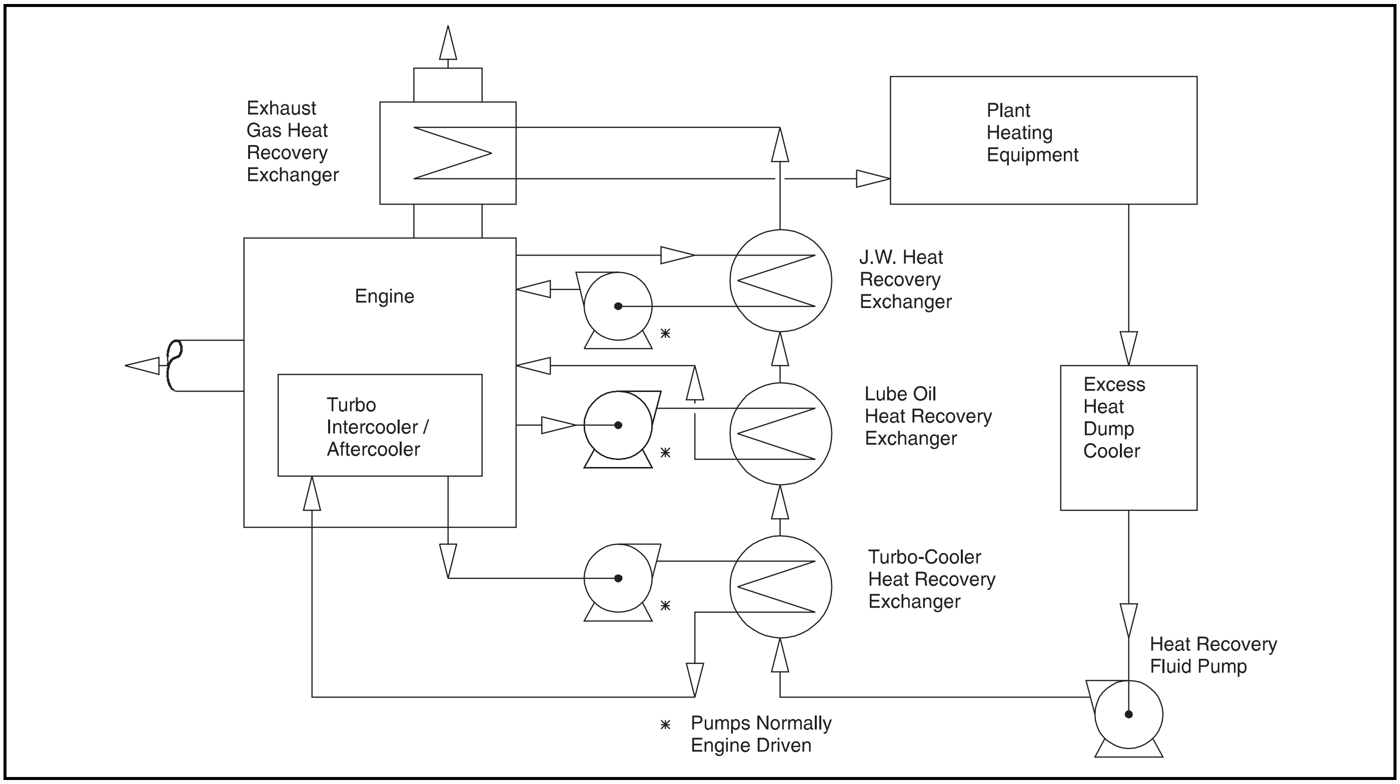

- Temperature and pressure switches (alarm and shutdown functions)

Lubrication

The majority of high horsepower, high speed gears are lubricated from a common sump which also lubricates the driving and the driven equipment. These systems are normally designed to operate with a high grade turbine oil with a minimum viscosity of 150 SSU at 100°F. A good operating pressure range for the oil is 25 to 50 psi, with 25 micron filtration.

COUPLINGS

A coupling is required to connect a prime mover to a piece of driven machinery. The purpose of a coupling is to transmit rotary motion and torque from one piece of machinery to another. A coupling may also serve a secondary purpose such as accommodating misalignment of the two pieces of equipment. There are two general categories of couplings: rigid and flexible.

Rigid Couplings

Rigid couplings are used when the two machines must be kept in exact alignment or when the rotor of one machine is used to support the rotor of another machine. Very precise alignment of machine bearings is necessary when using this type of coupling. Manufacturing tolerances are also extremely important. One common application for rigid couplings is in the pump industry where the prime mover, generally an electric motor, is positioned vertically above the pump.

Flexible Couplings

Flexible couplings, in addition to transmitting torque, accommodate unavoidable misalignment between shafts. Mechanically flexible couplings provide for misalignment by clearances in the design of the coupling. The most common type of mechanically flexible coupling is the gear-type. Material flexible couplings use the natural flexing of the coupling element to compensate for shaft misalignment. Metal, elastomer, or plastic having sufficient resistance to fatigue failure may be used for the flexing element of the coupling. Many types of flexible couplings are in common use and selection for a particular application depends on many factors including cost, horsepower, shaft speed, and reliability. A specialist should always be consulted for proper selection on any critical piece of equipment.

FIG. 15-37

Gear Quality

Pitch Line Velocity (ft/min)	Surface Quality (RMS) (micro inches)	Minimum Gear Quality Number
Under 8,000	45	10
8,001 - 10,000	32	11
10,001 - 20,000	32	12
20,001 - 30,000	20	12-13
Over 30,000	16	12-14

VIBRATION MONITORING

The oldest and most basic type of vibration measurement involved the use of the human senses to feel and listen to a machine. The basic approach has not changed, just the method. It was always difficult to justify enough time for one individual, or a group of individuals, to acquire periodic measurements on a large number of machines. Also, with the advent of high speed, high performance machines, failures can occur faster than personnel can react. In addition, very subtle changes can occur over a long period of time, making it difficult to realize by the human senses, but still affecting the machine's mechanical stability and safety. Vibration monitoring is simply the full-time electronic measurement and monitoring of vibration levels from a given machine. Typically, the monitoring responds to the overall signal input from the transducer regardless of the source of vibration (in-balance, bearing wear, coupling problems, misalignment, etc.).

A typical vibration monitor provides two levels of alarm: alert and danger, that can be adjusted to fit the characteristics of a given machine. These set points have associated relays which can be connected to external audible or visual annunciators on the control panel. If the alert or danger set point is exceeded, the monitor and annunciator will alert operations and maintenance personnel of this event. Ideally, the alert alarm will indicate that the machine condition has changed significantly, but allow some discrete time before the machine is in a dangerous condition. For most applications, if the machine does reach the danger level of vibration and continued operation would probably result in machine failure, automatic shutdown is mandatory regardless of the time lag that has occurred between alert and danger signal.

There are three types of vibration sensors: (1) accelerometers, (2) velocity transducers, and (3) proximity probes. For most large critical machinery, and certainly for machinery with fluid film-type bearings, the important measurement to be made is rotor motion relative to the machine bearing or bearing support. For this application, the proximity probe transducer has proven to be the most reliable indicator of machinery malfunctions.

The proximity probe is a noncontacting transducer, typically installed on the bearing or bearing housing, and observes the rotor radial dynamic motion and position with respect to the bearing clearance. This same type of proximity probe can be used to measure axial position and vibration as well.

For machines which exhibit significant amounts of casing motion, it may be necessary to add to this system a seismic transducer measuring machine casing vibration. Some unique applications dictate that measurements are necessary in the high frequency region, where accelerometers are typically employed.

The American Petroleum Institute (API) has published a specification describing vibration monitoring systems, API 670, "Vibration, Axial Position, and Bearing Temperature Monitoring Systems."

BIBLIOGRAPHY

1. Gartmann, Hans, Editor, "DeLaval Engineering Handbook," McGraw-Hill Book Company, 1970.
2. Karassik, I. J., Krutzsch, W. C., Fraser, W. H., Messina, J. P., Editors, "Pump Handbook," McGraw-Hill Book Company, 1976.

3. Obert, E. F., “Internal Combustion Engines,” International Textbook Co., 1968.
4. Sawyer, J. W., Editor, “Gas Turbine Handbook,” Gas Turbine Publications, Inc., 1966.
5. Kosow, I. L., “Control of Electric Machines,” Prentice-Hall, 1973.
6. Neerken, R. F., “Use Steam Turbines as Process Drivers,” Chemical Engineering, Vol. 87, No. 17, 1980.
7. Molich, K., “Consider Gas Turbines for Heavy Loads,” Chemical Engineering, Vol. 87, No. 17, 1980.
8. Brown, T., Cadick, J. L., “Electric Motors are the Basic CPI Prime Movers,” Chemical Engineering, Vol. 86, No. 6, 1979.
9. Salamone, D. J., “Journal Bearing Design Types and Their Applications to Turbomachinery,” Proceedings of the Thirteenth Turbomachinery Symposium, Turbomachinery Laboratories, Department of Mechanical Engineering, Texas A&M University, 1984.

SECTION 16

Hydrocarbon Recovery

Gas processing covers a broad range of operations to prepare natural gas for market. Processes for removal of contaminants such as H_2S, CO_2 and water are covered extensively in other sections of the Data Book. This chapter will cover the processes involved in recovering light hydrocarbon liquids for sale. The equipment components included in the processes described are covered in other sections of the Data Book. This section will bring those components together in process configurations used for liquid production.

INTRODUCTION

The recovery of light hydrocarbon liquids from natural gas streams can range from simple dew point control to deep ethane extraction. The desired degree of liquid recovery has a profound effect on process selection, complexity, and cost of the processing facility.

The term NGL (natural gas liquids) is a general term which applies to liquids recovered from natural gas and as such refers to ethane and heavier products. The term LPG (liquefied petroleum gas) describes hydrocarbon mixtures in which the main components are propane, iso and normal butane, propene and butenes. Typically in natural gas production olefins are not present in LPG.

Typically, modern gas processing facilities produce a single ethane plus product (normally called Y-grade) which is often sent offsite for further fractionation and processing. Whether accomplished on-site or at another facility, the mixed product will be further fractionated to make products such as purity ethane, ethane-propane (EP), commercial propane, isobutane, normal butane, mixed butanes, butane-gasoline (BG), and gasoline (or stabilized condensate). The degree of fractionation which occurs is market and geographically dependent.

Early efforts in the 20th century for liquid recovery involved compression and cooling of the gas stream and stabilization of a gasoline product. The lean oil absorption process was developed in the 1920s to increase recovery of gasoline and produce products with increasing quantities of butane. These gasoline products were, and still are, sold on a Reid vapor pressure (RVP) specification. Vapor pressures such as 10, 12, 14, 20 or 26 psia are common specifications for gasoline products. In order to further increase production of liquids, refrigerated lean oil absorption was developed in the 1950s. By cooling the oil and the gas with refrigeration, propane product can be recovered. With the production of propane from lean oil plants, a market developed for LPG as a portable liquid fuel.

In lieu of using lean oil, refrigeration of the gas can be used for propane and heavier component recovery. The use of straight refrigeration typically results in a much more economical processing facility. The refrigeration of the gas can be accomplished with mechanical refrigeration, absorption refrigeration, expansion through a J-T valve, or a combination. In order to achieve still lower processing temperatures, cascade refrigeration, mixed refrigerants, and turboexpander technologies have been developed and applied. With these technologies, recoveries of liquids can be significantly increased to achieve deep ethane recoveries. Early ethane recovery facilities targeted about 50 % ethane recovery. As processes developed, ethane recovery efficiencies have increased to well over 90%.

In some instances heavy hydrocarbons are removed to control the hydrocarbon dew point of the gas and prevent liquid from condensing in pipeline transmission and fuel systems. In this case the liquids are a byproduct of the processing and if no market exists for the liquids, they may be used as fuel. Alternatively, the liquids may be stabilized and marketed as condensate.

GAS COMPOSITION

The gas composition has a major impact on the economics of NGL recovery and the process selection. In general, gas with a greater quantity of liquefiable hydrocarbons produces a greater quantity of products and hence greater revenues for the gas processing facility. Richer gas also entails larger refrigeration duties, larger heat exchange surfaces and higher capital cost for a given recovery efficiency. Leaner gases generally require more severe processing conditions (lower temperatures) to achieve high recovery efficiencies.

Gases are typically characterized by the gallons per thousand cubic feet of recoverable hydrocarbons in the gas. This is commonly expressed as “GPM.” GPM was traditionally meant to apply to propane and heavier components but is often used to include ethane. The GPM of a gas can be calculated as shown in Example 16-1.

The other major consideration in the evaluation of NGL recovery options is the specification of the residue sales gas. Sales specifications are usually concerned with a minimum Higher Heating Value (HHV) of the gas, but in some instances the maximum HHV can also be a consideration. The calculation of HHV is covered in Section 23 and in more detail in GPA Standard 2172, “Calculation of Gross Heating Value, Relative Density, and Compressibility Factor for Natural Gas Mixtures from Compositional Analysis.”

Removal of liquids results in gas “shrinkage” and reduction of the HHV. This shrinkage represents a loss of revenue for the gas sales which must be considered in the economics of an NGL recovery plant. In general, sales gas specifications set the minimum HHV at 950-1000 BTU/scf. Thus, if any components such as nitrogen or CO_2 are present in the gas, sufficient ethane and heavier components must remain in the gas to meet the heating value specification. If little nitrogen or CO_2 is present in the gas, the recovery level of the ethane and heavier components is then limited by markets, cost of recovery, and gas value. The calculation of HHV and shrinkage cost is illustrated in Example 16-1.

Example 16-1 — Find the GPM of the gas mixture in Figure 16-1. Find the HHV of the feed gas and the HHV of the residue gas with the following NGL recovery efficiencies: C_2 – 90%, C_3 – 98%, iC_4 /nC_4 – 99%, C_5+ – 100%. What is the shrinkage cost at $2/MMBTU?

Solution Steps:

Solution is shown in Fig. 16-1.

From Fig. 23-2 obtain the gal/lb mole for each of the components. Multiply these values by the mole fraction of each component (mole% / 100) and divide by 379.49 scf/mol to get gallons per standard cubic foot of gas. Then multiply this value by 1000 to get the GPM of each component. The total GPM from Fig. 16-1 is 3.117.

For the recoveries specified the net gal/day and residue composition can be found as shown in Fig. 16-1. In order to compute the HHV of the two streams, the HHVs of each component are found in Fig. 23-2. Multiplying the individual HHVs by the mole % gives a total HHV of 1115.01 for the feed gas and 971.24 for the residue gas.

The shrinkage volume can be found by the difference of the volume of the feed gas times the HHV and the volume of residue gas times its HHV. This volume is then multiplied by \$2/MMBTU to get the shrinkage value of the NGLs.

$$\text{Shrinkage Value} = [(330 \bullet 1115.01) - (295.862 \bullet 971.24)]$$

$$\bullet \ \$2/\text{MMBTU} \ = \ \$161{,}201/\text{day}$$

The value of the NGLs in \$/gal versus the value of the components in the residue gas in \$/gal or the "spread" between these values is the primary economic criteria for NGL recovery project evaluations. Fig. 16-2 provides a way to quickly estimate potential revenues possible for liquid recovery projects.

DEW POINT CONTROL

Retrograde condensation has long been known to occur at reservoir conditions. Recognition that it also occurs in typical

FIG. 16-1

Solution to Example 16-1

GPM CALCULATION

Component	Feed Gas Mole %	Gal/Mole	Available GPM	Available Gal/Day	Estimated Recovery %	Net Gal/Day	Residue Gas Mole %
N_2	1.000						1.115
CO_2	3.000						3.346
C_1	85.000						94.808
C_2	5.800	10.126	1.548	510840	90	459756	0.647
C_3	3.000	10.433	0.825	272250	98	266805	0.067
IC_4	0.700	12.386	0.228	75240	99	74488	0.008
NC_4	0.800	11.937	0.252	83160	99	82328	0.009
IC_5	0.300	13.860	0.110	36300	100	36300	0.000
NC_5	0.200	13.713	0.072	23760	100	23760	0.000
C_6+	0.200	15.566	0.082	27060	100	27060	0.000
Total	100.000		3.117	1028610		970497	100.000
MMSCFD	330.000						295.862

SHRINKAGE CALCULATION

Component	Feed Gas Mole%	Residue Gas Mole %	HHV BTU/scf	Feed Gas BTU/scf	Residue Gas BTU/scf
N_2	1.000	1.115	0.0	0.00	0.00
CO_2	3.000	3.346	0.0	0.00	0.00
C_1	85.000	94.808	1010.0	858.50	957.56
C_2	5.800	0.647	1769.6	102.64	11.45
C_3	3.000	0.067	2516.1	75.48	1.68
IC_4	0.700	0.008	3251.9	22.76	0.25
NC_4	0.800	0.009	3262.3	26.10	0.29
IC_5	0.300	0.000	4000.9	12.00	0.00
NC_5	0.200	0.000	4008.9	8.02	0.00
C_6+	0.200	0.000	4755.9	9.51	0.00
Total	100.000	100.000		1115.01	971.24
MMSCFD	330.000	295.862			

processing conditions was an early result of computer calculations using equations of state to predict vapor-liquid behavior. The phenomenon is illustrated in Fig. 16-3 showing dew point calculations for a gas stream leaving a separator at 100°F and 1000 psia. These dew point curves show that as the pressure is reduced, liquid is formed. The heavier the hydrocarbon, the more the dew point temperature increases as the pressure is lowered. The cricondentherm of the dew point curve is primarily determined by the nature of the heaviest component in the gas rather than the total quantity of the heavy component in the feed gas.

When gas is transported in pipelines, consideration must be given to the control of the formation of hydrocarbon liquids in the pipeline system. Condensation of liquid is a problem in metering, pressure drop and safe operation. Condensation of liquid can also be a major problem with two-phase flow and liquid slugging.

To prevent the formation of liquids in the system, it is necessary to control the hydrocarbon dew point below the pipeline operating conditions. Since the pipeline operating conditions are usually fixed by design and environmental considerations, single-phase flow can only be assured by removal of the heavier hydrocarbons from the gas.

Low Temperature Separation

Several methods can be used to reduce the hydrocarbon dew point. If sufficient pressure is available, the removal can be accomplished by expansion refrigeration in an LTS (Low Tem-

FIG. 16-2

Shrinkage Value of NGL Components[1]

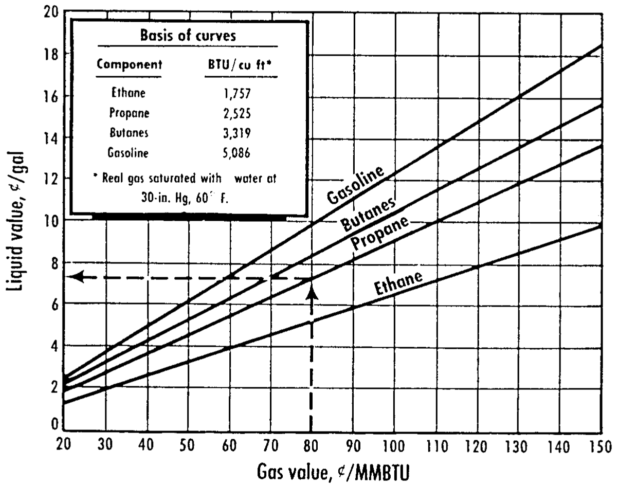

FIG. 16-3

Typical Low Pressure Retrograde Condensation Dew Point Curves[3]

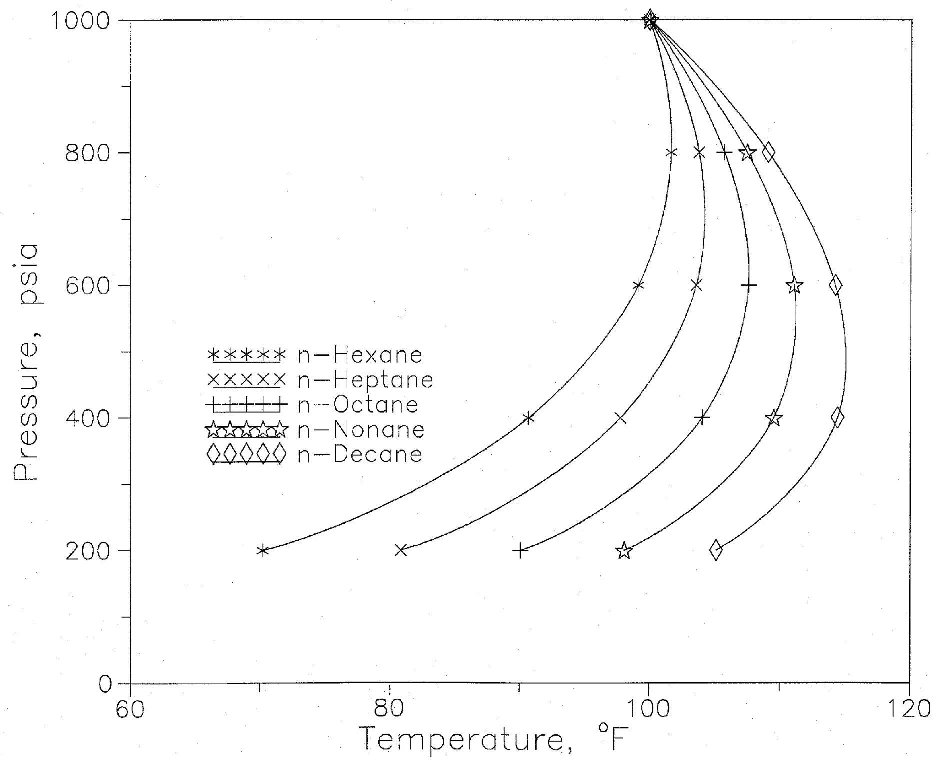

perature Separation) unit. The expansion refrigeration system uses the Joule-Thomson effect to reduce the gas temperature upon expansion. This temperature reduction results in not only hydrocarbon liquid condensation but also water condensation. The water is generally removed as hydrates in this process, melted and removed. Thus, the process can actually accomplish dew point control of both water and hydrocarbon in a single unit.

Fig. 16-4 shows one example of an LTS system. The high pressure gas may first go through a heater. This heater is often not needed, depending on the gas conditions. The gas then enters the heat exchanger coil in the bottom of the separator where the gas is cooled by exchange with the condensed liquid and hydrates. Any water or condensate produced at this point is removed in the high pressure separator (HPKO). The gas from the separator is then heat exchanged with the outlet product gas for further cooling. The temperature must be controlled at this point to prevent hydrate formation in the exchanger. The gas from this point passes through the pressure reducing valve where the Joule-Thomson expansion occurs. The hydrocarbon liquid and hydrates produced from this expansion fall to the bottom of the low temperature separator. The hydrates are melted and both the water and condensate are removed by level control. The gas leaving the separator has a hydrocarbon dew point equal to the temperature and pressure of the separator.

The hydrocarbon and water dew points achievable with this process are limited by the pressure differential available as well as the composition of the feed gas. The LTS system can only be used where sufficient pressure is available to perform the desired processing and separation. It is an attractive process step if sufficient liquid removal can be achieved at the available operating conditions. A further modification to this process is to add glycol injection to the high pressure gas to allow the achievement of lower water dew points when available pressure is limited. Fig. 16-5 shows an LTS system with glycol injection. The use of the glycol eliminates the need to heat the LTS liquid phase and helps to ensure that no hydrate formation will block the process equipment upstream of the LTS separator.

Refrigeration

Often excess pressure is not available to operate an LTS system. An alternative to the expansion refrigeration system is to utilize a mechanical refrigeration system to remove heavy hydrocarbon components and reduce the gas dew point. The schematic for a refrigeration dew point control unit is shown in Fig. 16-6. This process flow is essentially the same as that used for straight refrigeration NGL recovery. The gas pressure is generally maintained through the process allowing for equipment pressure drops. The gas is heat exchanged and then cooled by the refrigeration chiller to a specified temperature. Liquid is separated in the cold separator. The temperature of the separator is set to provide the desired dew point margin

FIG. 16-4

Low-Temperature Separation Unit[4]

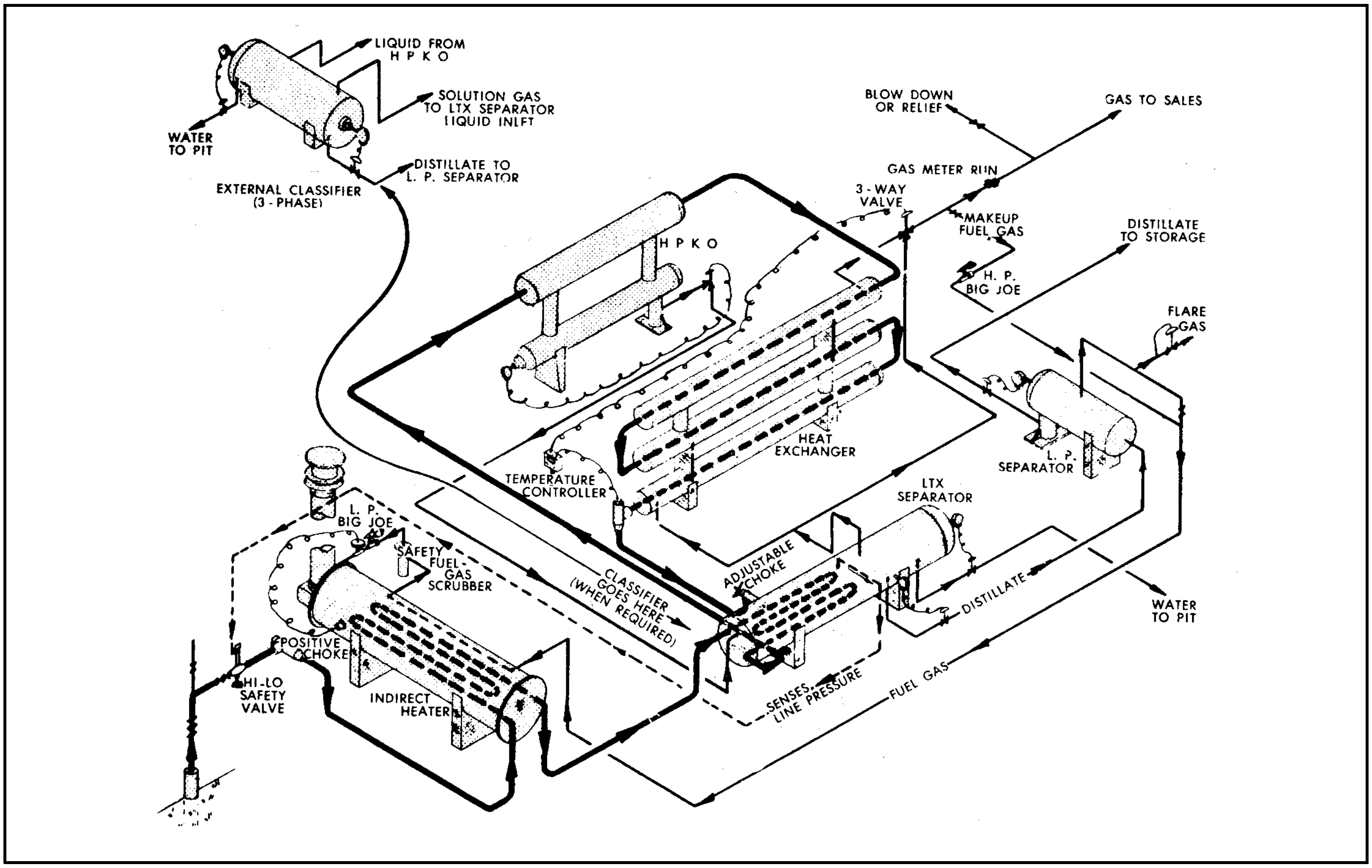

FIG. 16-5

Low-Temperature Separation System with Glycol Injection and Condensate Stabilization[4]

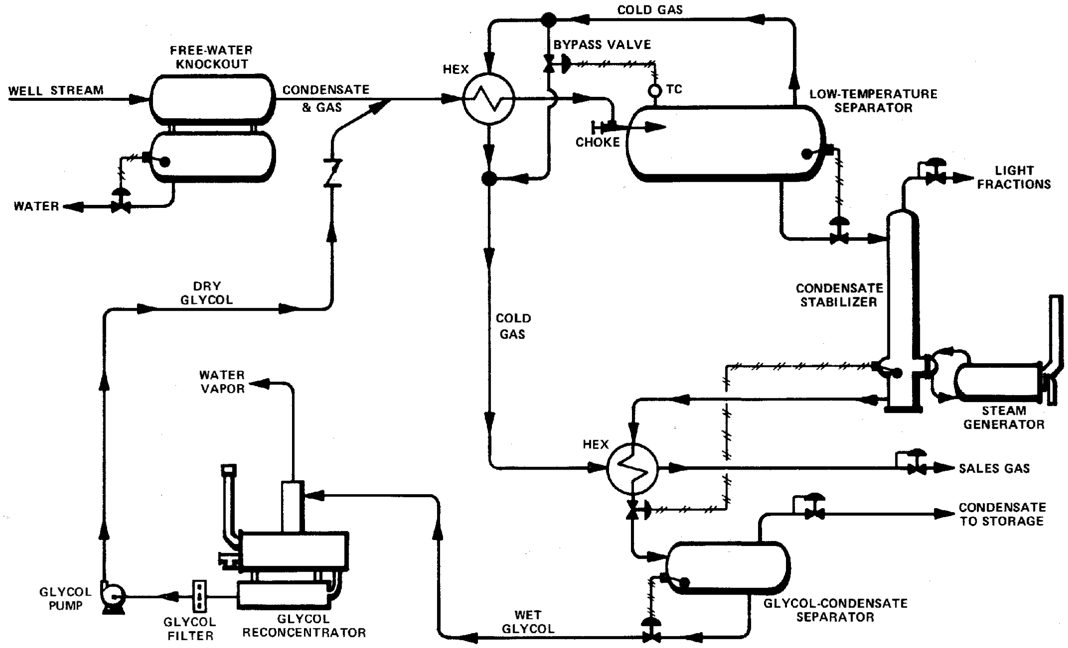

FIG. 16-6

Straight Refrigeration Process

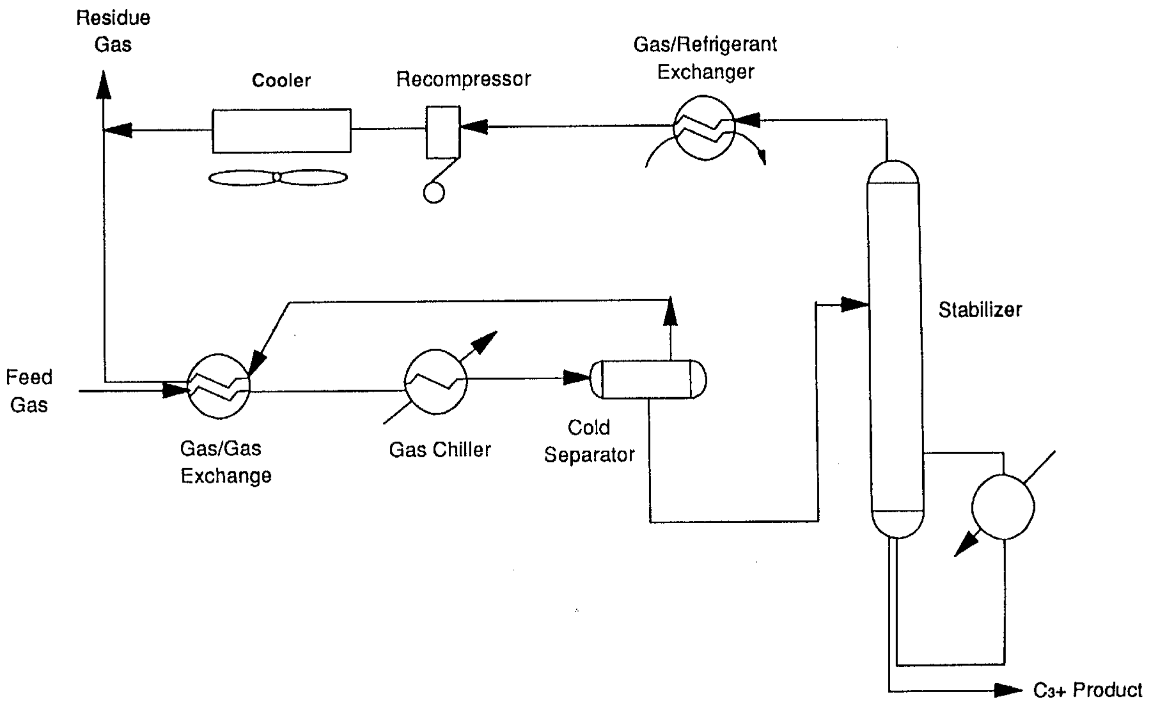

for sales gas operations. This temperature specification must take into account the gas which is recombined from the liquid stabilization step as well as potential variations in the feed gas pressure.

Provision must be made in this process for hydrate prevention. This can be accomplished by either dehydration upstream of the unit or by integrating the dehydration with the refrigeration unit. Use of glycol injection is usually the most cost effective means of controlling water dew points. The only drawback is that the refrigeration must be in operation to accomplish the dehydration. If it is desired to operate the dehydration at times independent of the refrigeration, then separate units are used.

Stabilization

One of the problems in using dew point control units of both expansion LTS and mechanical refrigeration systems is the disposition of the liquids removed. The liquids must be stabilized by flashing to lower pressure or by the use of a stabilization column. When the condensate is flashed to a lower pressure, light hydrocarbons are liberated which may be disposed of in a fuel gas system.

The stabilization column can produce a higher quality and better controlled product. The condensate stabilizer is usually a top feed column which runs at a reduced pressure from the cold separator and has a reboiler to produce a specified vapor pressure product. The overhead vapor is either sent to fuel as shown in Fig. 16-5 or recompressed and combined with the sales gas as shown in Fig. 16-6. The column contains either trays or packing to provide necessary mass transfer for stabilization of the liquid feed. After stabilization, the product is cooled and sent to storage.

Emerging Technologies

New process configurations are being brought to market to take advantage of gas expansion for liquid separation. Each of these processes use static equipment to achieve the desired separation and are focused on replacing Joule-Thomson expansion valves and/or turbo-expanders.

One of these processes is the Twister technology. This process (Figure 16-7) uses a supersonic nozzle in which the pressure is reduced and liquid is formed. The supersonic stream is then passed across vanes which swirl the stream. This centrifugal motion forces the liquid to the wall where it is drained from the apparatus. The vapor is then expanded in a diffuser nozzle and recovers 70-80% of the initial pressure. Tests have shown that this process has about 90% isentropic efficiency. This technology is focused on hydrocarbon dewpoint control and dehydration applications in both onshore and offshore locations.

Another process uses a vortex tube device to affect the separation. The vortex tube is based on the Ranque-Hilsch tubes developed in the 1940s. These tubes have been used as laboratory devices and small scale coolers. The working principle of these devices is the same. (Figure 16-8) A gas is injected tangentially through a nozzle into the center of the tube where it expands to a low pressure. The gas flows cyclonic to the far end of the tube. During this flow, two temperature zones are formed, a warm zone near the wall and a cooler zone near the center. At the end of the tube the center gas is deflected and returns along the tube through an orifice near the inlet nozzle. The tube is therefore capable of producing two gas streams at different temperatures. The cold gas is at a temperature below that achievable with an isenthalpic expansion. If the two outlet streams were to be mixed, the combined temperature would be equal to the temperature achieved by the isenthalpic expansion. Thus the vortex tube performs the same function as

FIG. 16-7

Concept of the Twister Process

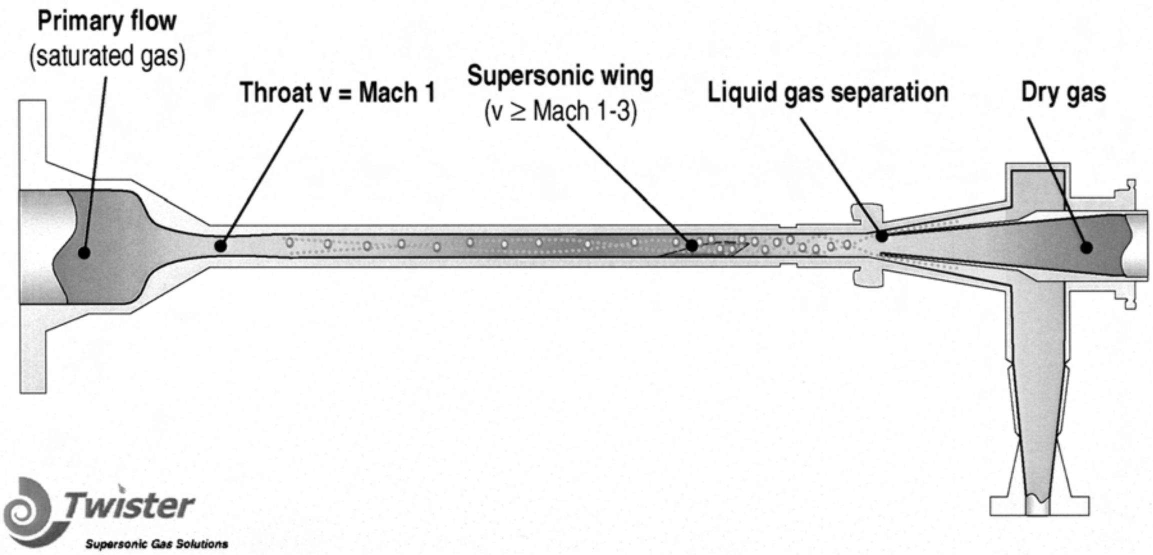

FIG. 16-8

Basic Design of a Vortex-Tube Device

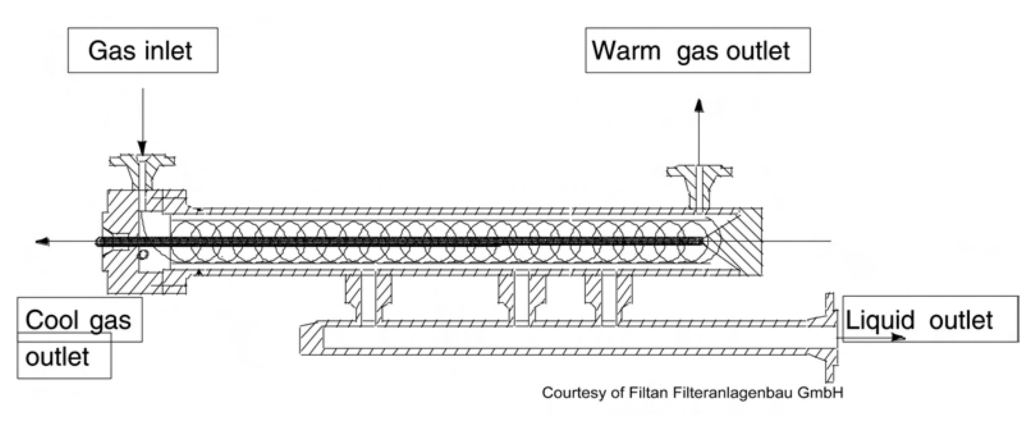

Courtesy of Filtan Filteranlagenbau GmbH

Joule-Thomson valve but produces a lower outlet gas temperature for a portion of the stream. This apparatus could have application where gas pressure drop is available, dewpoint control is needed, and the warm and cool gas are recombined after liquid removal.

STRAIGHT REFRIGERATION

The straight refrigeration process is quite flexible in its application to NGL recovery. As outlined in the previous section, the process can simply be used for dew point control when modest liquid recovery is needed or desired. Alternatively, the process can be used for high propane recovery and, in the case of rich gases, for reasonable quantities of ethane recovery. The recovery level is a strong function of the feed gas pressure, gas composition and temperature level in the refrigeration chiller. Fig. 16-9 shows curves for estimating the recovery achievable as a function of temperature and gas richness for a given processing pressure. (GPM in this figure is propane plus.) Generally speaking, higher recovery efficiencies can be achieved with richer feed gas. The straight refrigeration process is typically used with a glycol injection system. This configuration is limited in the temperature of operation by the viscosity of the glycol at the lower temperatures. Also, refrigeration is typically provided by propane refrigeration which is limited to –44°F refrigerant at atmospheric pressure and thus a processing temperature of about –40°F. In order to go lower in processing temperature, upstream dehydration and alternative refrigeration systems must be considered.

Fig. 16-10 illustrates the ethane recovery efficiency which can be expected. As with propane recovery, for a given temperature level, higher extraction efficiency can be achieved with richer gas. However, ethane recovery of over 30% can be achieved from a gas as lean as 3 GPM (C_3+). Fig. 16-11 illustrates the effect of gas pressure on plant performance in propane plus recovery operation.

Refrigeration Process Alternatives

There are many variations in the straight refrigeration process. Fig. 16-12 illustrates four of the most common variations. In the first scheme the gas is cooled against the residue gas and the cold separator liquid before being chilled with refrigeration. This scheme uses a top-feed fractionator with the overhead being recompressed and recycled to the inlet. The use of the liquid /feed gas exchanger helps reduce the chiller load. In this case, the residue gas from the cold separator has a dew point of the cold separator operating conditions.

The second scheme also uses a top-feed fractionator, but the cold separator liquid is fed directly to the fractionator. This fractionator operates with a lower overhead temperature which justifies exchange with the refrigeration system. The overhead after being warmed is recompressed and blended with the residue gas from the cold separator. In this configuration the fractionator overhead usually raises the residue gas dew point somewhat. The cold separator temperature must be

FIG. 16-9

Recovery Efficiency, Propane Plus[5]

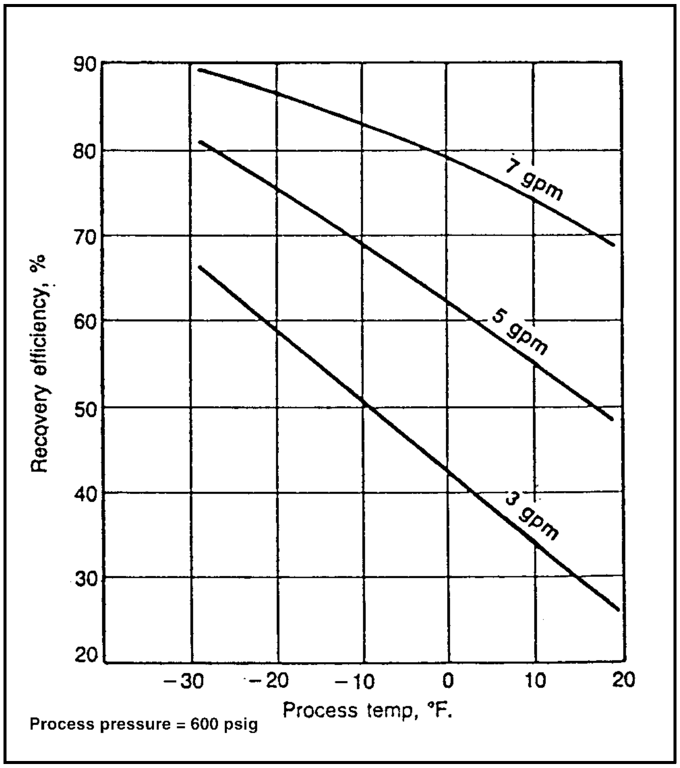

set to ensure that the desired dew point specification of the combined stream is achieved.

The third process uses a refluxed fractionator. This type design usually has the highest liquid recovery efficiency, but has a higher cost due to the overhead system added. The fourth variation can be used where the cold separator liquid can be pumped and the stabilizer run at an elevated pressure. This eliminates the need for a recompressor.

Any one or a combination of the following conditions:

- Higher separator pressure
- Richer gas
- Recovery limited to propane-plus

will lead to higher recycle/recompressor rates. This results in more refrigeration horsepower, more recompressor horsepower, more fractionator heat, and larger equipment. These conditions favor the second and third schemes of Fig. 16-12.

Any one or a combination of the following conditions:

- Lower separator pressure (around 600 psig)
- Leaner gas (below 3 GPM C3+)
- Recovery includes ethane

will lead to lower recycle/recompressor rates. These conditions favor the first scheme in Fig. 16-12, or the fourth scheme if the separator pressure is not higher than 400-450 psig. Separator pressure below 400 psig, expecially with lean gas, will result in poor product recovery.

Regardless of the exact configuration employed, the capacity of the specific refrigeration system varies directly with refrigerant condensing temperature and evaporating temperature. Condensing temperature is set by the condensing medium available at the plant site, and the process chiller temperature is set by the refrigerant evaporating temperature. Refrigerant horsepower requirements vary with condensing and evaporating temperatures. Lower condenser temperature and higher evaporating temperature require lower horsepower per unit of refrigeration required. For a given refrigeration load, horsepower and condenser duties can be found in Section 14 for a variety of refrigerants.

LEAN OIL ABSORPTION

Absorption is the physical process where a vapor molecule of a lighter hydrocarbon component will go into solution with a heavier hydrocarbon liquid (nonane, decane and heavier) and be separated from the gas stream. The process can be operated at ambient temperatures if only the heavier NGL products are desired. A refrigerated system enhances the recovery of lighter hydrocarbon products such as ethane and propane. The absorbing fluid (lean oil) is usually a mixture of paraffinic compounds having a molecular weight between 100 and 200.

Lean oil absorption processes have the advantage that the absorber can operate at essentially feed gas pressure with minimal loss of pressure in the gas stream which exits the process. Plants, whether ambient or refrigerated, are constructed of carbon steel. This type process was used from the early part of the 20th century and plants are still in use today. However, most lean oil plants have been shut down or replaced with more modern straight refrigeration or turboexpander process plants. The lean oil process requires large processing

FIG. 16-10

Recovery Efficiency, Ethane Plus[5]

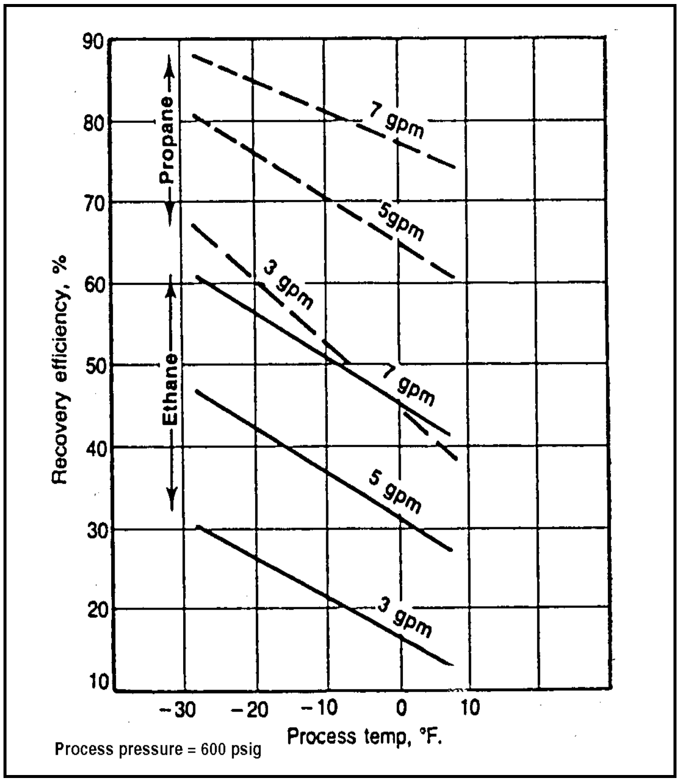

Process pressure = 600 psig

FIG. 16-11

Effect of Gas Conditions on Propane Recovery[5]

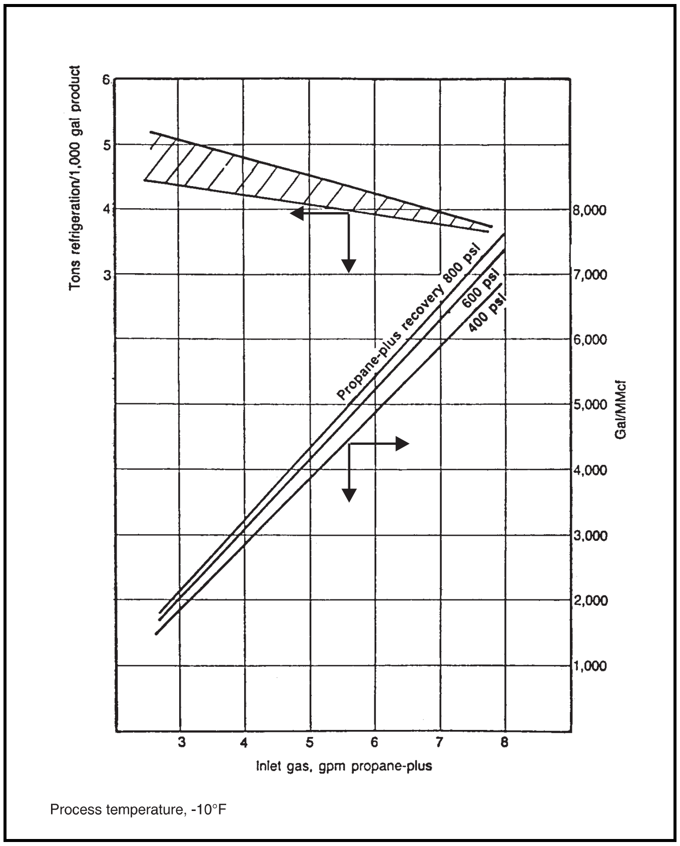

Process temperature, -10°F

FIG. 16-12

Refrigeration Process Alternatives[6]

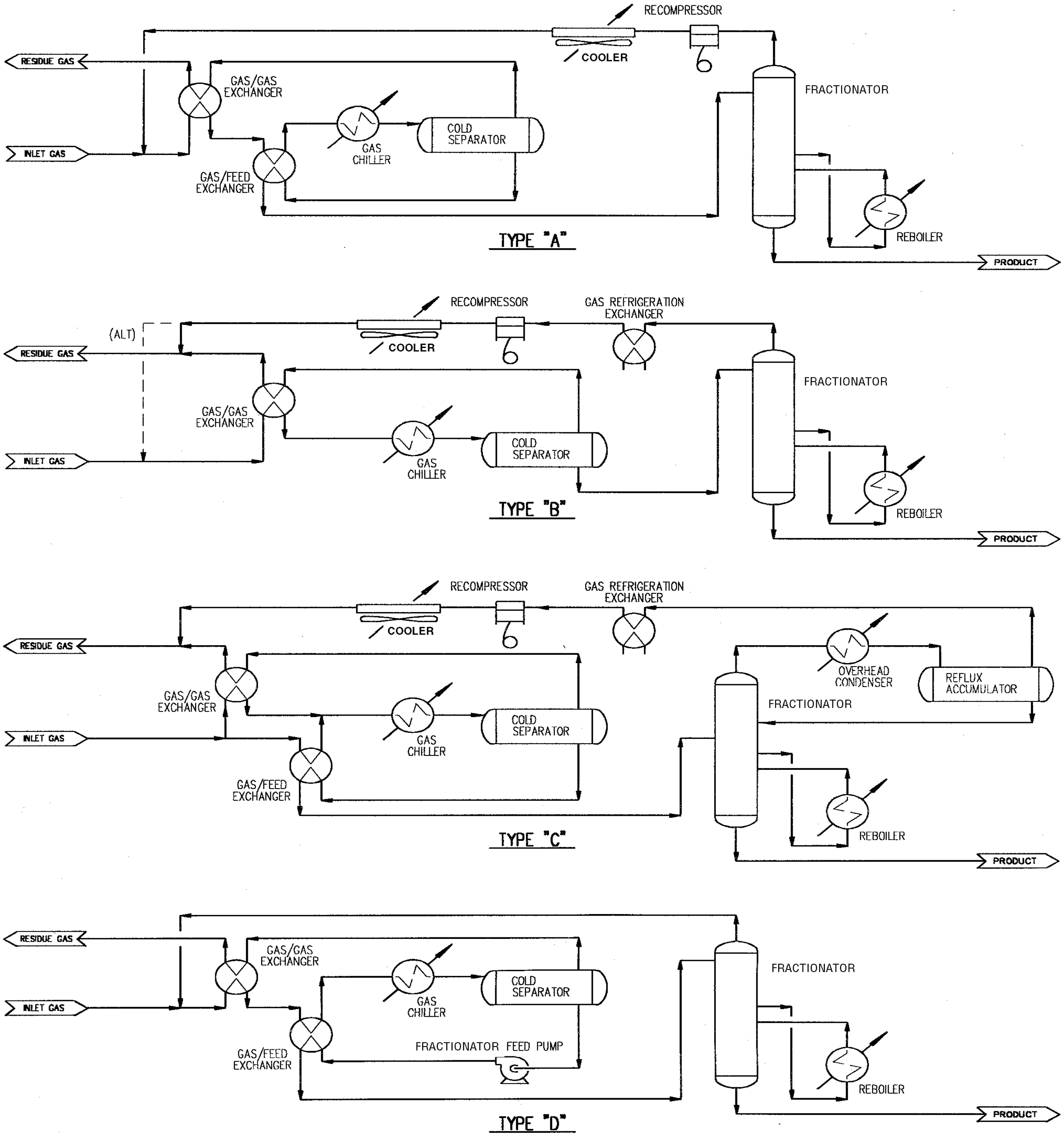

equipment with excessive energy requirements. Lean oil absorption units are still used in many refinery operations.

Process Considerations

The desired composition of the lean oil is determined by the absorber pressure and temperature. The optimum molecular weight lean oil is the lowest weight oil which can be retained in the absorber with acceptable equilibrium losses to the residue gas. Lean oil absorption plants operating without refrigeration will require a higher molecular weight oil, usually in the 150-200 molecular weight range. Refrigerated lean oil absorption systems can operate with an absorbing medium as low as 100 molecular weight with proper design.

Since the absorption is on a molar basis, it is desired to contact the gas stream with the maximum number of moles of lean oil to maximize the recovery of products from the gas. However, the circulation rate is units of volume, e.g. cubic meters per hour. Therefore, a plant designed to circulate a heavier molecular weight oil can circulate more moles of oil with the same equipment if the molecular weight is lowered.

Many absorption oil recovery plants designed to originally operate at ambient temperatures have been modified to include a refrigeration system that allows both the lean oil and the gas to be chilled before entering the absorber. The reduced temperature increases the absorption and allows circulation of less oil of lower molecular weight because the vaporization rate into the residue gas is reduced. Oil is also lost with the NGL product. Oil losses with the product can be minimized by improving fractionation in the lean oil still. Many refrigerated lean oil absorption plants can recover enough heavy ends from the gas stream to offset oil losses from the absorber, thereby making its own absorption oil.

If the gas stream contains compounds that cause the absorption oil molecular weight to exceed design, a lean oil stripper can be used on a side stream of circulating lean oil to remove the heavy components. It is important to maintain the molecular weight of the absorption oil at the design value because the circulating equipment, heat exchangers, and distillation process are designed to utilize a particular molecular weight fluid.

Refrigerated Lean Oil

Fig. 16-13 shows a typical refrigerated lean oil absorption process. The actual equipment configuration changes with different gas feeds and product recoveries.

Raw gas enters the plant inlet separator upstream of the main process where inlet liquids are separated. The gas then enters a series of heat exchangers where cold process gas and the refrigerant reduce the feed gas temperature. This reduction in temperature results in condensation of the heavier hydrocarbons in the inlet gas.

FIG. 16-13

Refrigerated Lean Oil Absorption[7]

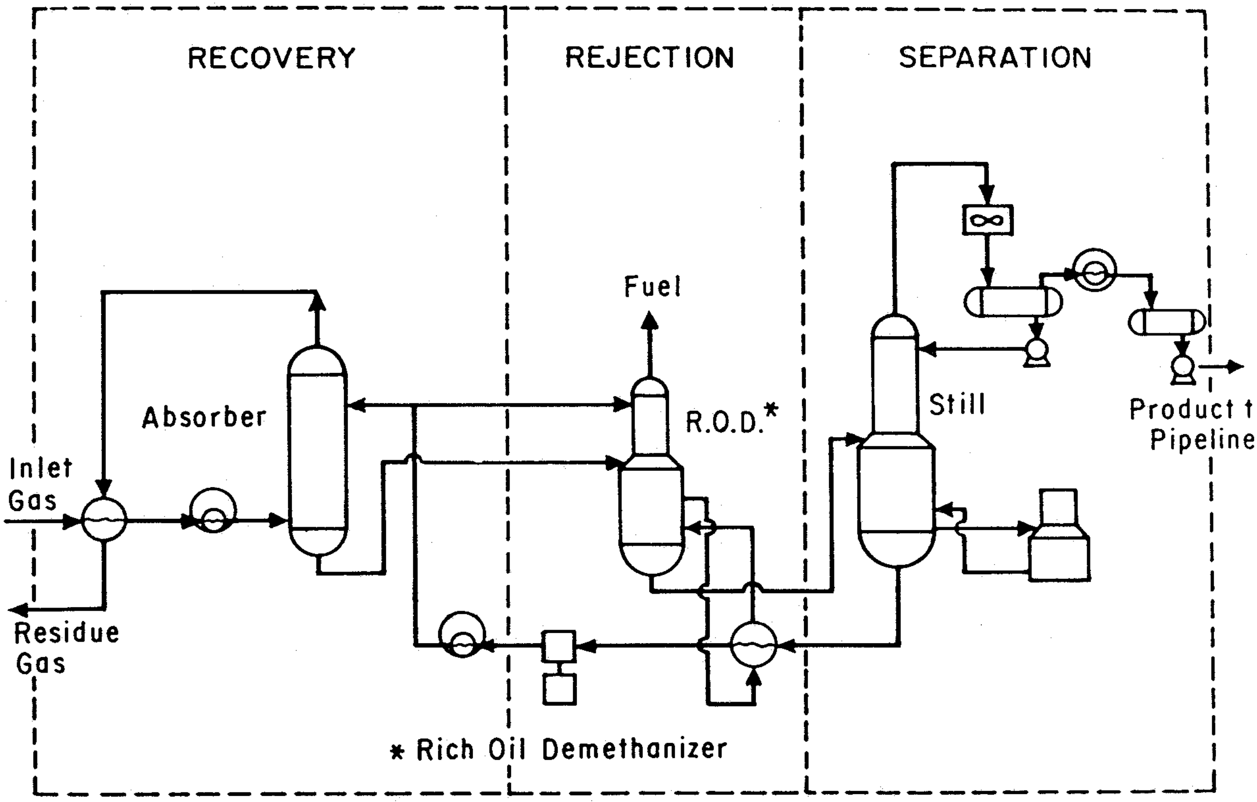

The gas is then fed to the bottom of the absorber where it flows upward countercurrent to the lean oil which is introduced at the top of the column. The lean oil has also been chilled to aid in NGL absorption. This column has trays or packing which increase the contact of the gas and lean oil. The lean oil physically absorbs the heavier hydrocarbons from the gas. The lighter components stay in the gas and leave the top of the absorber. The oil and absorbed hydrocarbons leave the bottom of the absorber as "rich oil."

The rich oil flows to the Rich Oil Demethanizer (ROD) where heat is applied to the rich oil stream to drive out the lighter hydrocarbons which were absorbed. Some of the cold lean oil is also fed to the top of the ROD to prevent loss of desirable NGLs from the rich oil.

The rich oil from the ROD is then fed to a fractionation tower or "still." The still is operated at a low pressure and the NGLs are released from the rich oil by the combination of pressure reduction and heat addition in the still. The operation of the still is critical to the overall plant operation as this is not only the point where the desired product is produced, but the lean oil quality from the bottom of the column is important in the absorption of NGLs in the absorber. The refrigeration required for the oil and gas chilling and the heat inputs to the ROD and still are the key parameters which must be controlled to operate a lean oil plant efficiently.

ETHANE RECOVERY

Dew Point control and mechanical refrigeration systems are intended for applications where moderate to high propane recoveries are desired. In order to achieve higher propane recoveries and ethane recovery, cryogenic temperatures are required. Generally, the natural gas processing industry considers cryogenic processing to be processes which operate below –50°F. Fig. 16-14 shows an estimate of the temperatures required to achieve 60 percent ethane recovery at various operating pressures; for an example feed gas. In order to achieve these temperatures, a combination of pressure expansion and chilling is used. There are three general methods which can be used to achieve the conditions necessary to attain high ethane recovery levels.

1. J-T Expansion
2. Turboexpander
3. Mechanical refrigeration

Each of these processes has been used successfully, with the turboexpander being the predominant process of choice for ethane recovery facilities.

One of the key parameters in the recovery of ethane and heavier products is the effect of the extraction on the BTU content of the residue gas. Fig. 16-15 is a generalized correlation of the ethane recovery limit to attain a 1000 BTU/cu ft HHV for various feed gas compositions. As can be seen from this chart, the quantity of inerts in the feed gas has an impact on the ethane recovery level which can be targeted in a plant design. Fig. 16-16 shows expected propane and butane recoveries which can be expected with increasing ethane recovery level. The propane recovery can vary quite a bit depending on the exact choice of the process configuration.

FIG. 16-14

Example of Pressure and Temperature to Recover 60 Percent Ethane[7]

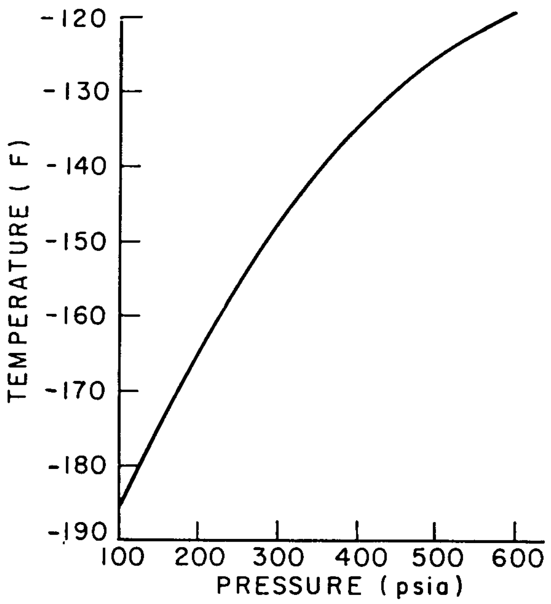

FIG. 16-15

Maximum Ethane Recovery[1]

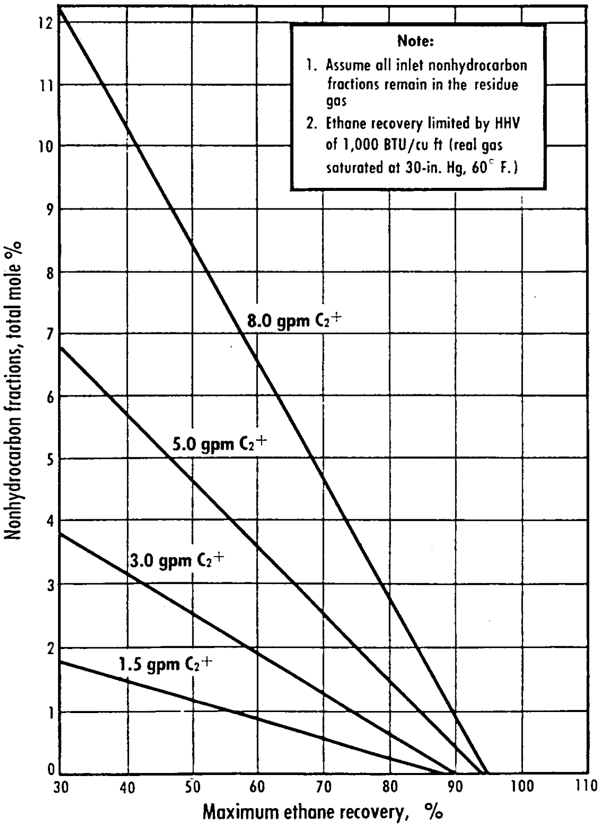

FIG. 16-16

Relative Recovery Curves[1]

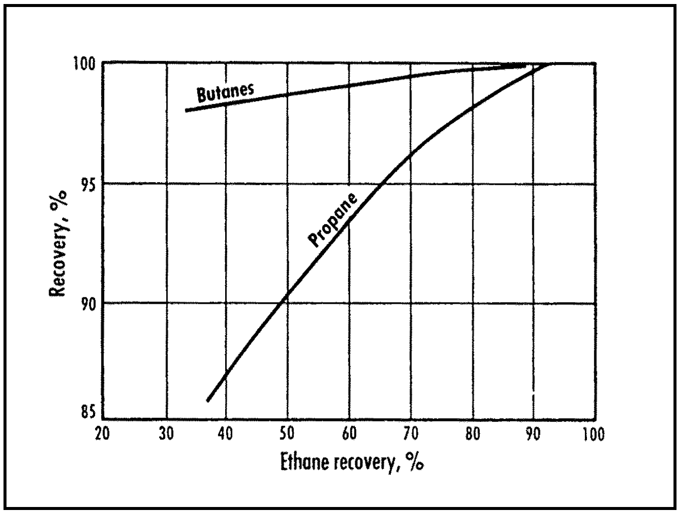

J-T EXPANSION

The use of the Joule-Thomson (J-T) effect to recover liquids is an attractive alternative in many applications. The general concept is to chill the gas by expanding the gas across a J-T valve. With appropriate heat exchange and large pressure differential across the J-T valve, cryogenic temperatures can be achieved resulting in high extraction efficiencies. The main difference between the J-T design and turboexpanders is that the gas expansion is adiabatic across the valve. In a turboexpander the expansion follows a more nearly isentropic path. Thus the J-T design tends to be less efficient per unit of energy expended than the turboexpander.

The J-T process does offer some advantages over the turboexpander and refrigeration processes in the following situations:

1. Low gas rates and modest ethane recovery.
2. The process can be designed with no rotating equipment.
3. Broad range of flows.
4. Simplicity of design and operation.

Process Flow

Fig. 16-17 illustrates the process arrangement for a J-T expansion process. In order to effectively use the J-T process, the gas must be at a high inlet pressure. Pressures over 1000 psia are typical in these facilities. If the gas pressure is too low, inlet compression is necessary or insufficient expansion chilling will be attained. The gas must first be dried to ensure that no water enters the cold portion of the process. Typically, molecular sieves or alumina are used for the drying. Methanol injection has been used in a few plants successfully but can be an operating problem.

After drying, the gas is cooled by heat exchange with the cold residue gas and also by heat exchange with the demethanizer

FIG. 16-17

J-T Expansion Process[8]

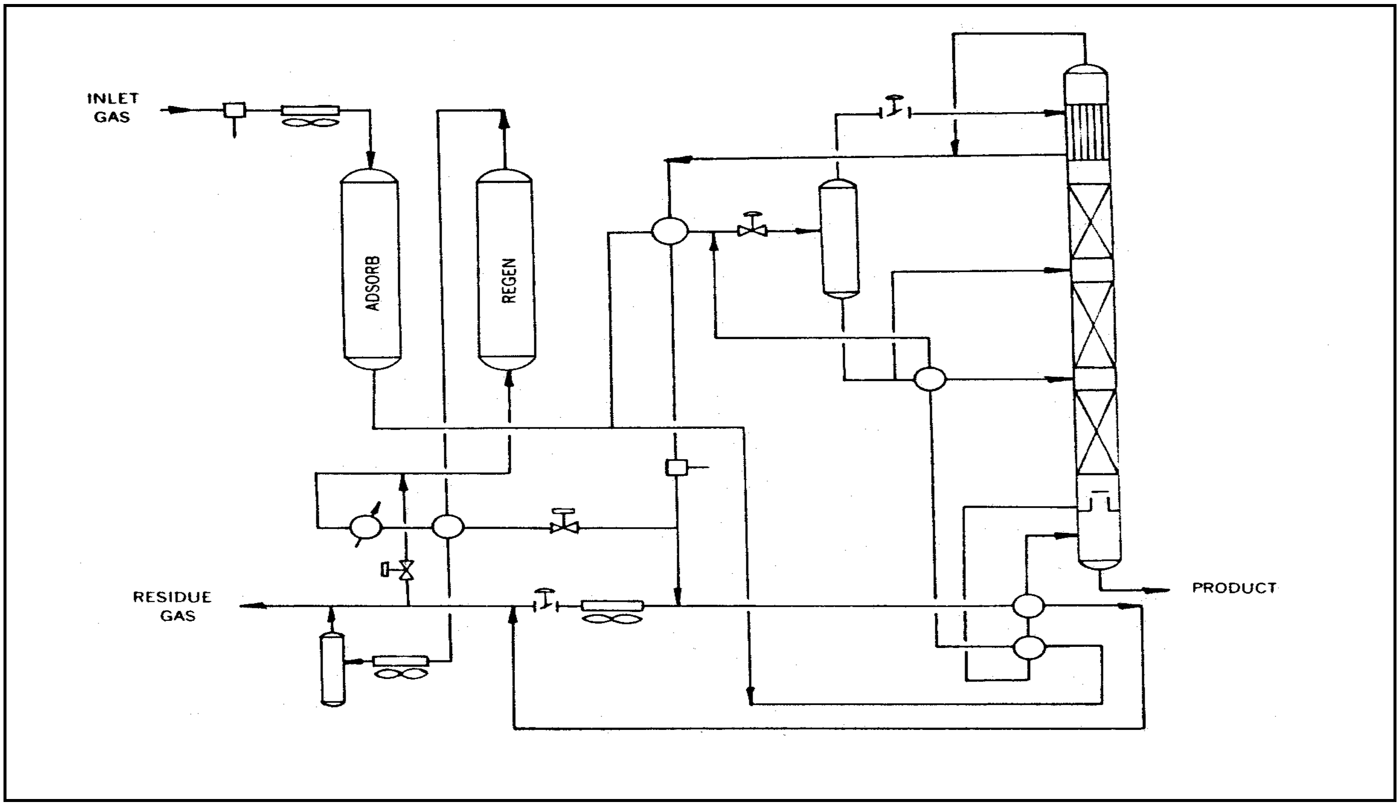

exchangers and in some cases the liquid product from the cold separator. After chilling, the gas is expanded across the J-T valve and sent to the cold separator. The liquid from this separator is the feed to the demethanizer. Usually this tower is a cold, top feed design. However, in some designs such as shown in Fig. 16-17, a reflux arrangement is included for the ethane rejection operation. The cold liquid is demethanized to the proper specification in this tower. The cold overhead product from the demethanizer is exchanged with the feed and recompressed as necessary for residue sales.

The key to this process is the pressure driving force across the J-T valve and the quantity of heat exchange surface included in the plant heat exchangers. The process can operate over a wide range of feed gas conditions and produce specification product. The process is thus very simple to operate and is often operated as an unattended or partially attended facility.

Refrigerated J-T

In some cases the feed gas is not at high enough pressure or the gas is rich in liquefiable hydrocarbons. Then mechanical refrigeration can be added to the J-T process to enhance recovery efficiencies. Fig. 16-18 shows the J-T process with refrigeration added to aid in chilling the feed gas. Another process variation is shown in this figure. The gas in this design is expanded downstream of the cold separator. The location of the J-T valve is dependent on the gas pressure and composition involved. The advantage of refrigeration is that lower feed pressure can be used or, alternatively, the demethanizer can be operated at a higher pressure thus reducing residue compression.

The J-T process, whether refrigerated or non-refrigerated, offers a simple, flexible process for moderate ethane recovery. It is usually applied to smaller gas flows where some inefficiency can be tolerated for reduction in capital and operating costs.

TURBOEXPANDER PROCESSING

The process which dominates ethane recovery facility design is the turboexpander process. This process uses the feed gas pressure to produce needed refrigeration by expansion across a turbine (turboexpander). The turboexpander recovers useful work from this gas expansion. Typically the expander is linked to a centrifugal compressor to recompress the residue gas from the process. Because the expansion is near isentropic, the turboexpander lowers the gas temperature significantly more than expansion across a J-T valve. Details of the turboexpander equipment are in Section 13.

The process as originally conceived utilized a top feed, nonrefluxed demethanizer. As higher and higher recovery levels have been desired, alternative designs have been developed. The focus of these designs is to produce reflux for the demethanizer to attain lower overhead temperatures and higher ethane recovery.

The turboexpander process has been applied to a wide range of process conditions and, in addition to ethane recovery projects, is often used as a process for high propane recovery. The process can be designed to switch from ethane recovery to ethane rejection operation with minimal operating changes.

FIG. 16-18

Refrigerated J-T Process

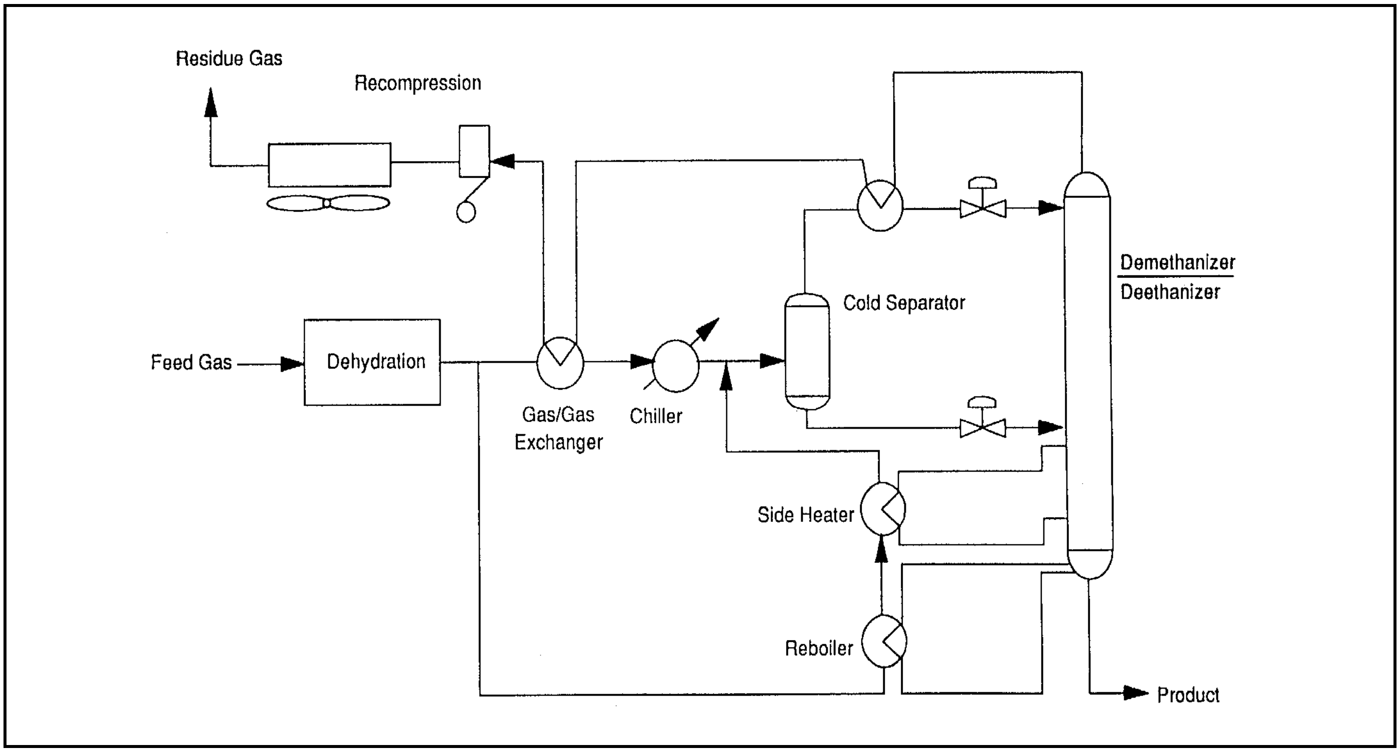

Conventional Process

The original turboexpander process is shown in Fig. 16-19. Dry feed gas is first cooled against the residue gas and used for side heating of the demethanizer. Additionally, with richer gas feeds, mechanical refrigeration is often needed to supplement the gas chilling. The chilled gas is sent to the cold separator where the condensed liquid is separated, flashed and fed to the middle part of the demethanizer. The vapor flows through the turboexpander and feeds the top of the column. A J-T valve is installed in parallel with the expander. This valve can be used to handle excess gas flow beyond the design of the expander or can be used for the full flow if the expander is out of service.

In this configuration the ethane recovery is limited to about 80% or less. Also, the cold separator is operated at a low temperature to maximize recovery. Often the high pressure and low temperature conditions are near the critical point of the gas making the operation unstable. Another problem with this design is the presence of CO_2, which can solidify at operating temperatures found in this process. The critical design points are the expander outlet and the top few stages of the demethanizer. Chapter 13 discusses the CO_2 freezing problem and the methods of solid CO_2 formation prediction.

One alternative to the conventional design is the use of two expanders where the expansion occurs in two steps. While this design can help with approach to critical in the cold separator, it does little for solid formation conditions in the demethanizer column. This design has been used in a few plants but other modifications have been developed which relieve both the critical conditions and CO_2 freezing problems.

Residue Recycle

To increase the ethane recovery beyond the 80% achievable with the conventional design, a source of reflux must be developed for the demethanizer. One of the methods is to recycle a portion of the residue gas, after recompression, back to the top of the column. As shown in Fig. 16-20, the process flow is similar to the conventional design except that a portion of the residue is brought back through the inlet heat exchange. At this point the stream is totally condensed and is at the residue gas pipeline pressure. The stream is then flashed to the top of the demethanizer to provide reflux. The expander outlet stream is sent a few trays down in the tower rather than to the top of the column. The reflux provides more refrigeration to the system and allows very high ethane recovery to be realized. The recovery level is a function of the quantity of recycle in the design.

The residue recycle (RR) system has been used successfully in numerous facilities. It is CO_2 tolerant and the recovery can be adjusted by the quantity of recycle used. The RR process can be used for very high ethane recoveries limited only by the quantity of horsepower provided.

GSP Design

The Gas Subcooled Process (GSP) was developed to overcome the problems encountered with the conventional expander process. This process, shown in Fig. 16-21, alters the conventional process in several ways. A portion of the gas from the cold separator is sent to a heat exchanger where it is totally condensed with the overhead stream. This stream is then flashed to top of the demethanizer providing reflux to the demethanizer.

FIG. 16-19

Conventional Expander

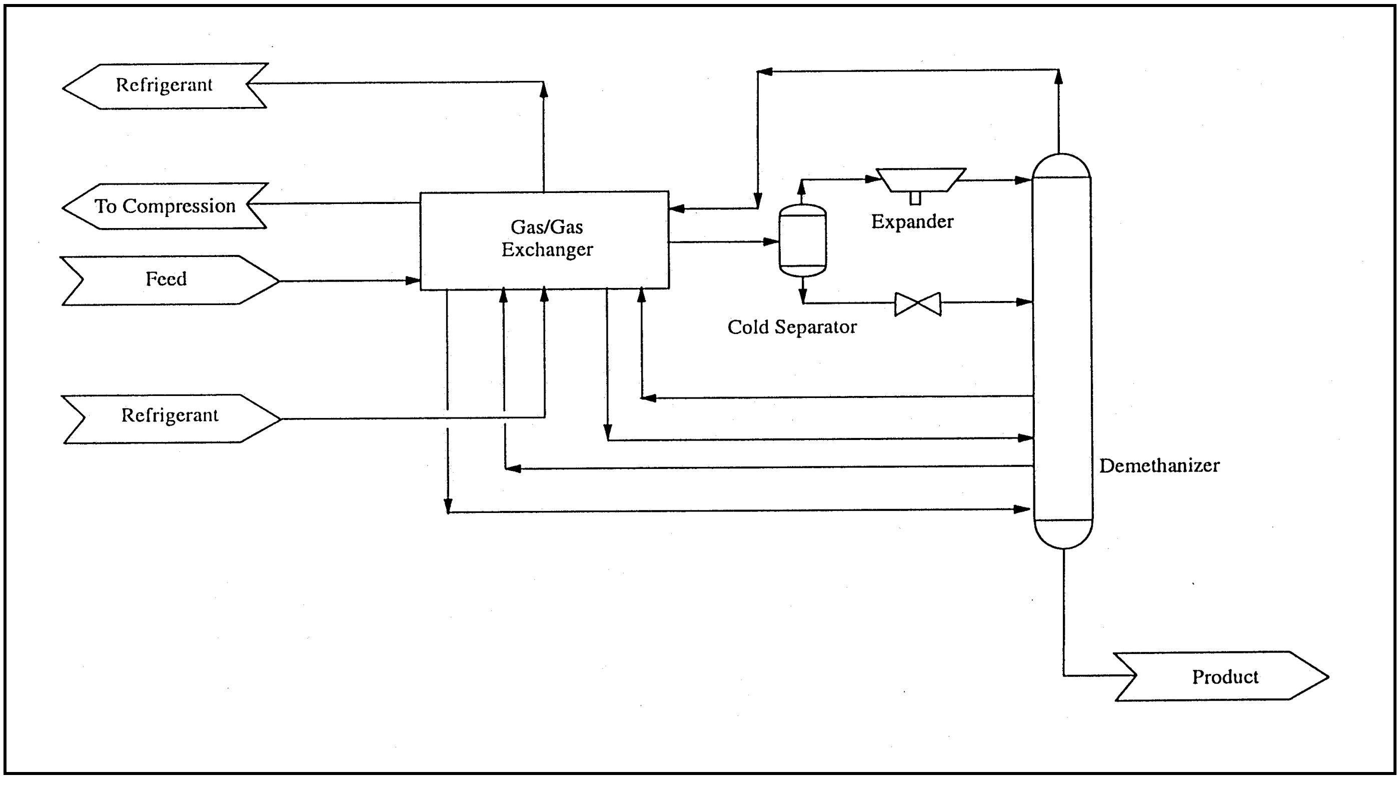

FIG. 16-20

Residue Recycle

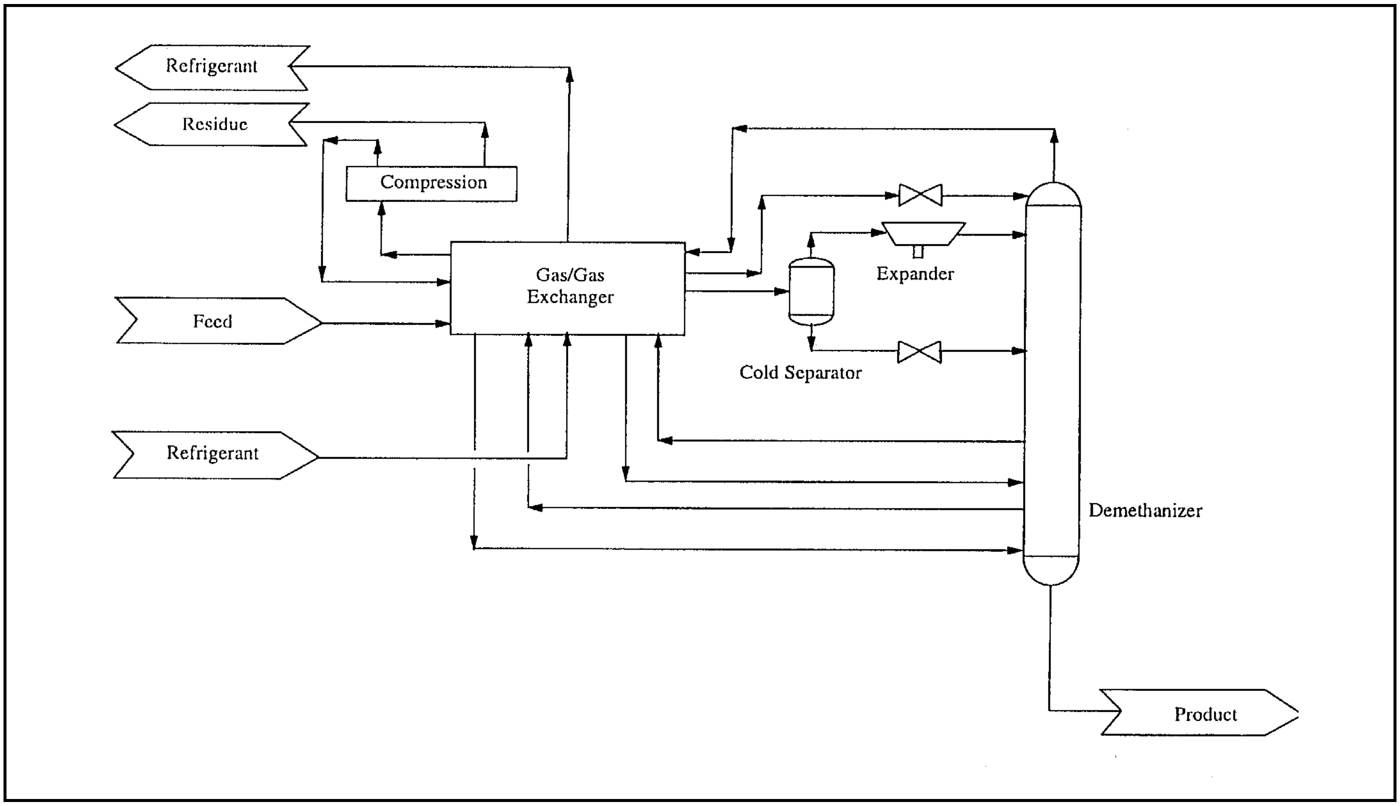

FIG. 16-21

Gas Subcooled Process

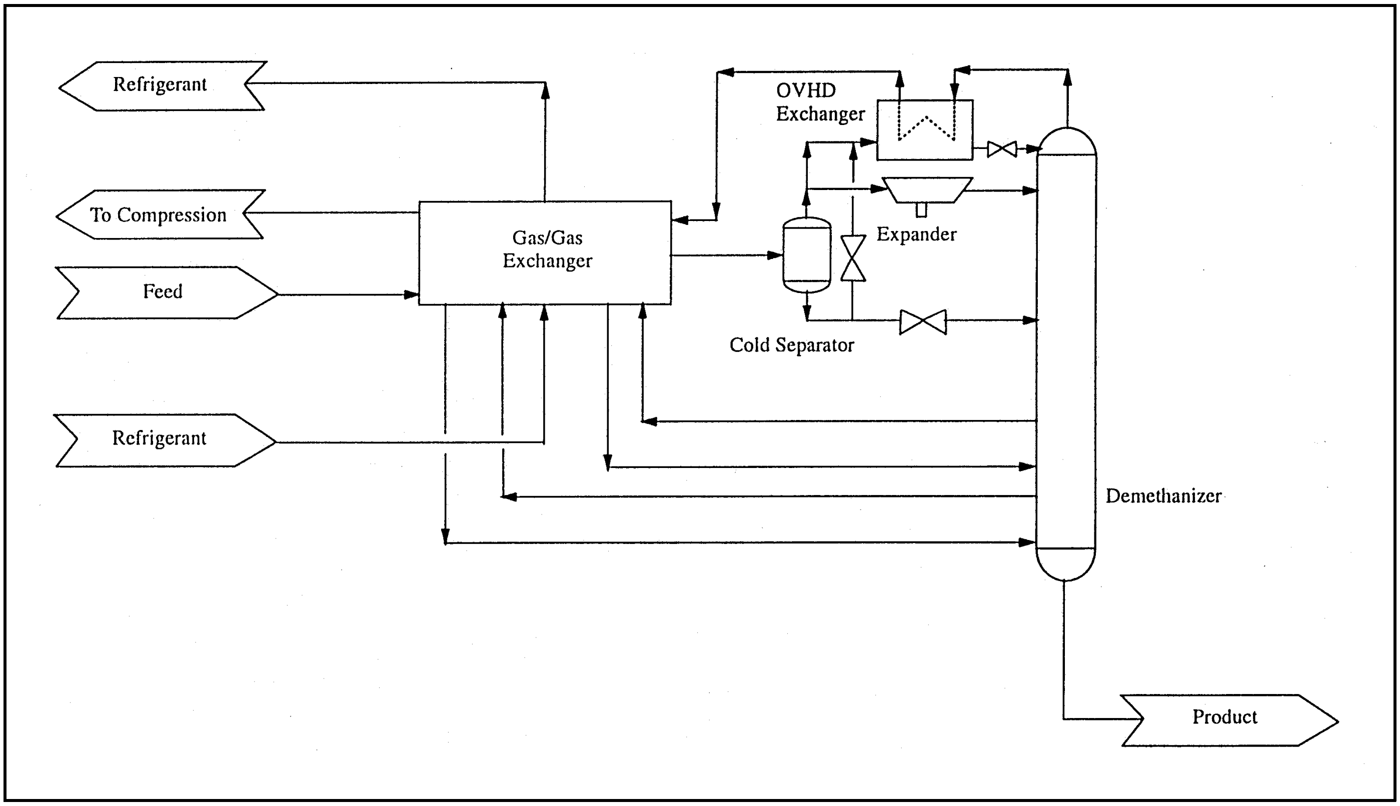

As with the RR process, the expander feed is sent to the tower several stages below the top of the column. Because of this modification, the cold separator operates at much warmer conditions well away from the system critical. Additionally, the residue recompression is less than with the conventional expander process. The horsepower is typically lower than the RR process at recovery levels below 92%.

The GSP design has several modifications. One is to take a portion of the liquid from the cold separator along with the gas to the overhead exchanger. Generally, this can help to further reduce the horsepower required for recompression. Also, the process can be designed to just use a portion of the cold separator liquid for reflux. This modification is typically used for gases richer than 3 GPM. The GSP design is very CO_2 tolerant; many designs require no up front CO_2 removal to achieve high recovery. CO_2 levels are very composition and operating pressure dependent, but levels up to 2% can usually be tolerated with the GSP design.

A new process scheme has been developed to combine the GSP and RR processes into an integrated process scheme. This concept is based on applying the best features of each process to the integrated design. This combination can result in higher ethane recovery efficiency than can be achieved with GSP.

CRR Process

The Cold Residue Recycle (CRR) process is a modification of the GSP process to achieve higher ethane recovery levels. The process flow in Fig. 16-22 is similar to the GSP except that a compressor and condenser have been added to the overhead system to take a portion of the residue gas and provide additional reflux for the demethanizer. This process is attractive for extremely high ethane recovery. Recovery levels above 98% are achievable with this process. This process is also excellent for extremely high propane recovery while rejecting essentially all the ethane.

A comparison of the RR, GSP and CRR processes for one particular case is shown in Fig. 16-23. This comparison is typical for these processes. The RR design is the least efficient up to about 91%. Above this point the RR design can achieve higher ethane recovery than the GSP design. As can be seen, the RR process is quite sensitive to available power. The GSP design has a rather flat recovery curve and is a good choice for recoveries around 90+%. The CRR process has the highest recovery for the available residue recompressor power, but consideration must be given to the cost of the additional overhead system equipment and recycle compressor.

Enhanced NGL Recovery Process

Another improvement of the turboexpander-based NGL process is the IPSI Enhanced NGL Recovery Process. (Figure 19-24) This process utilizes a slip stream from or near the bottom of the distillation column (demethanizer) as a mixed refrigerant. The mixed refrigerant is totally or partially vaporized, providing refrigeration for inlet gas cooling otherwise normally accomplished using an external refrigeration system. The vapor generated from this "self-refrigeration" cycle is specifically tailored to enhance separation efficiency, then is recompressed and recycled back to the bottom of the tower where it serves as a stripping gas. The innovation not only reduces or eliminates the need for inlet gas cooling via external refrigeration, but also provides the following enhancements to the demethanizer operation:

FIG. 16-22

Cold Residue Recycle Process

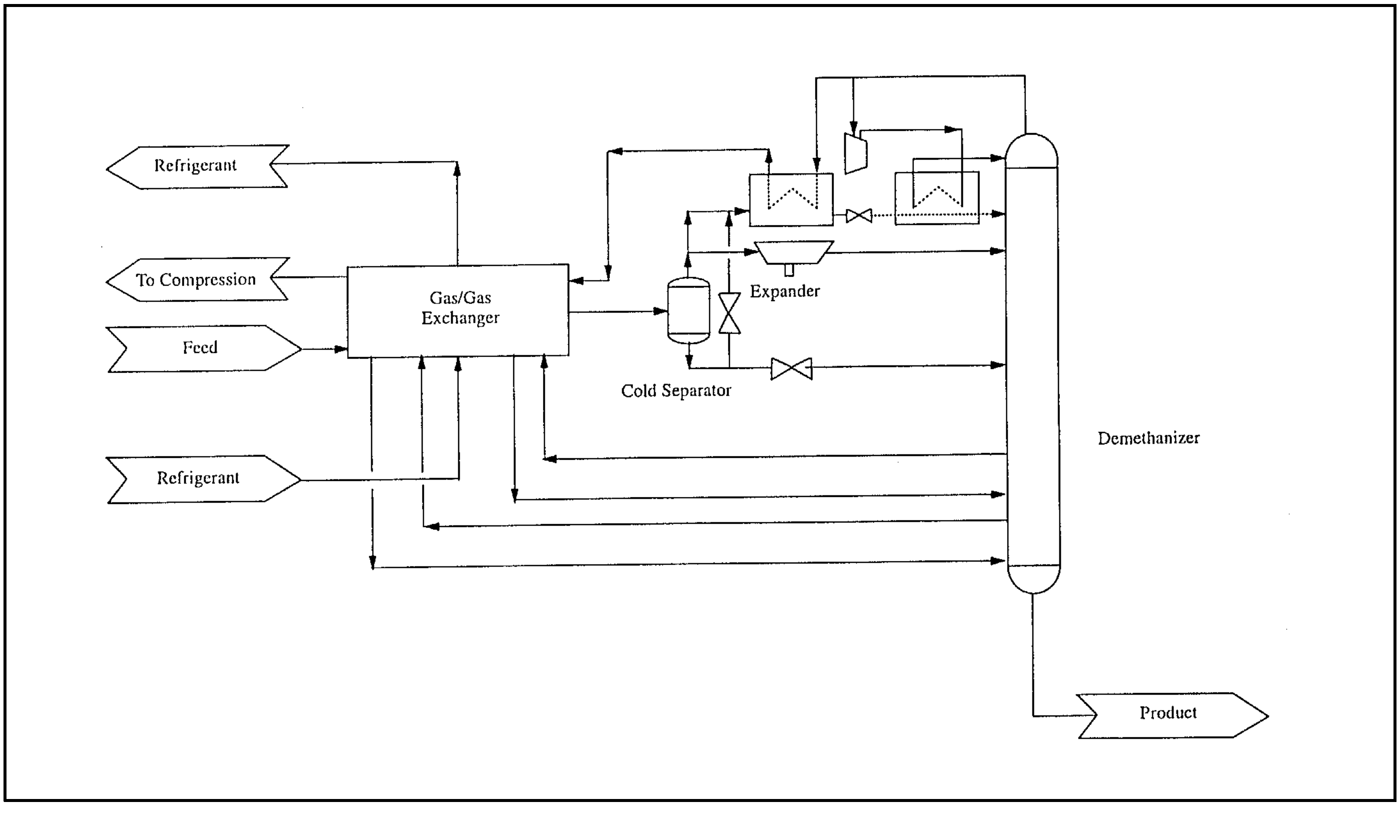

FIG. 16-23

Example % Ethane Recovery vs. Residue Compression Power

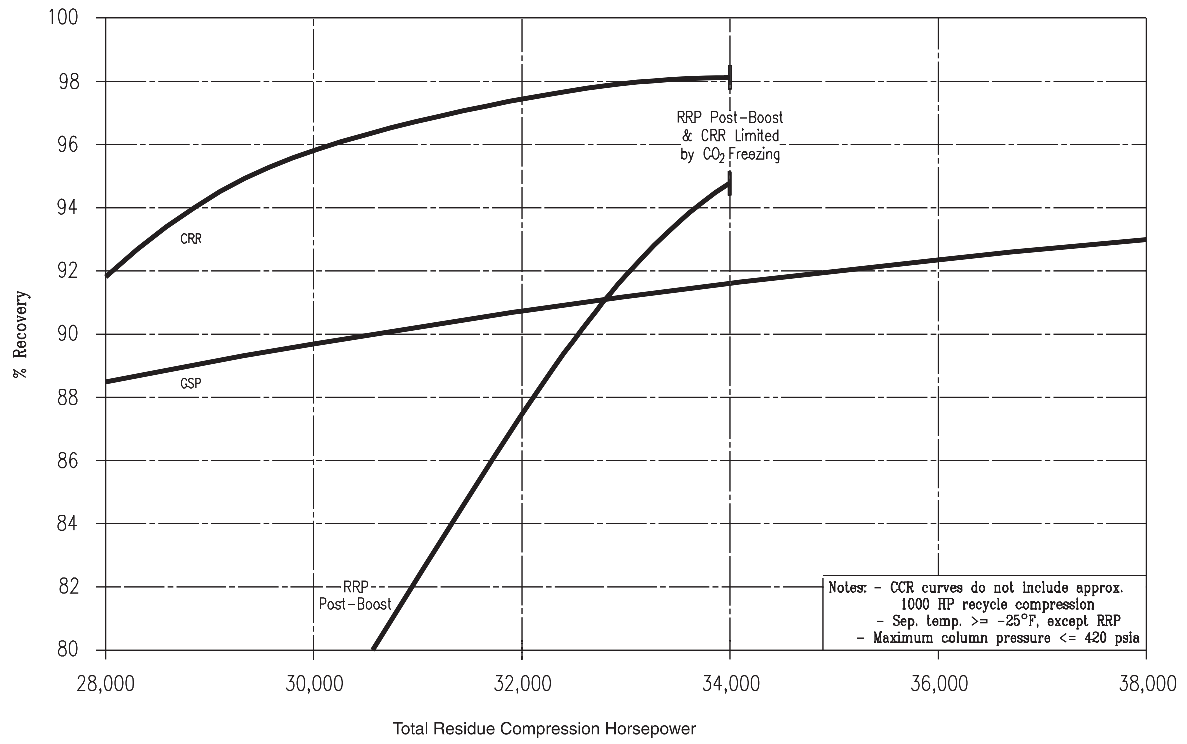

FIG. 16-24

IPSI Enhanced NGL Recovery Process

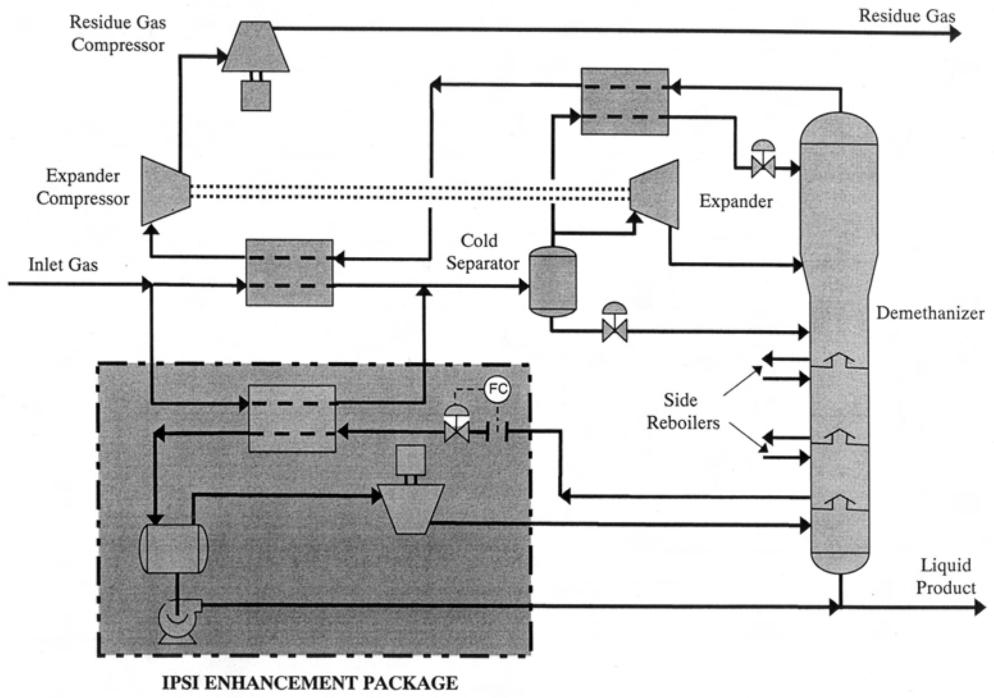

- Lowers the temperature profile in the tower, thereby permitting better energy integration for inlet gas cooling via reboilers, resulting in reduced heating and refrigeration requirements.
- Reduces and/or eliminates the need for external reboiler heat, thereby saving fuel plus refrigeration.
- Enhances the relative volatility of the key components in the tower when operated at a typical pressure, thereby improving separation efficiency and NGL recovery; or alternatively allows increased tower pressure at a typical recovery efficiency, thereby reducing the residue gas compression requirements.

High Propane Recovery Processes

The processes shown in Figure 16-20, 21, and 22 are processes which can recover ethane in the presence of CO2. They can also be configured to reject ethane and recover a reasonable level of propane. The processes are equilibrium limited in the overhead reflux stream to achieve high propane recovery. Other process configurations have been developed which focus on high propane recovery. These are especially attractive in locations where ethane recovery is not contemplated.

One such process is the OverHead Recycle process (OHR) shown in Figure 16-25. This process configuration uses an absorber column and deethanizer column to achieve the desired separation. The overhead from the deethanizer is condensed and used to absorb propane from the expander outlet stream. This configuration provides more efficient recovery of propane but is not suitable for ethane recovery. This process can be reconfigured to the GSP if ethane recovery is desired.

The OHR process has been improved to make better use of the refrigeration available in the feed streams. The Improved Overhead Reflux (IOR) process shown in Figure 16-26 makes a few strategic changes from the OHR process. In this process the reflux for the deethanizer is produced in the absorber overhead system which produces reflux for both towers. The absorber bottoms is heated against the feed before being sent to the deethanizer. The use of the two columns results in a propane recovery of over 99% while the ethane recovery is set to produce the desired purity propane in the deethanizer bottoms. This basic IOR setup has been modified by combining the absorber and deethanizer into a single column with a side draw to produce reflux. If this process, dubbed the SCORE process, can be accommodated in the plant from a structural standpoint, there is potential for saving equipment from the IOR process.

MIXED REFRIGERANT PROCESS

The use of a mixed refrigerant process is an interesting alternative to the turboexpander process. Such processes have been used widely in LNG processing and to a lesser extent in NGL recovery. One of the characteristics of the process is that low temperatures can be achieved with significantly reduced inlet gas pressure. The chilling can be achieved totally with mechanical refrigeration or with a mixture of refrigeration and expansion. If inlet compression is contemplated for a turboexpander plant, then mixed refrigerant processing can be an economic alternative.

Fig. 16-27 shows one type of mixed refrigerant process. In this case the feed gas is chilled to cold separator temperature where the liquid is sent to the demethanizer as in an expander process. The overhead vapor is split and the majority sent through an expander to the upper part of the demethanizer. A portion of the gas is cooled further in the main heat exchanger and sent to the top of the demethanizer as reflux. Alternatively, the turboexpander can be eliminated and the total stream cooled in the main exchanger and fed to the demethanizer. The residue gas would be exchanged with the feed in the main heat exchanger. The refrigeration is provided by a single mixed refrigerant system designed to provide the necessary low temperature conditions. The refrigerant would typically be a methane, ethane, propane mixture with some heavier components as dictated by the design conditions. A critical aspect of the design is to maintain the desired refrigerant composition during plant operation.

FIG 16-25

OHR Process

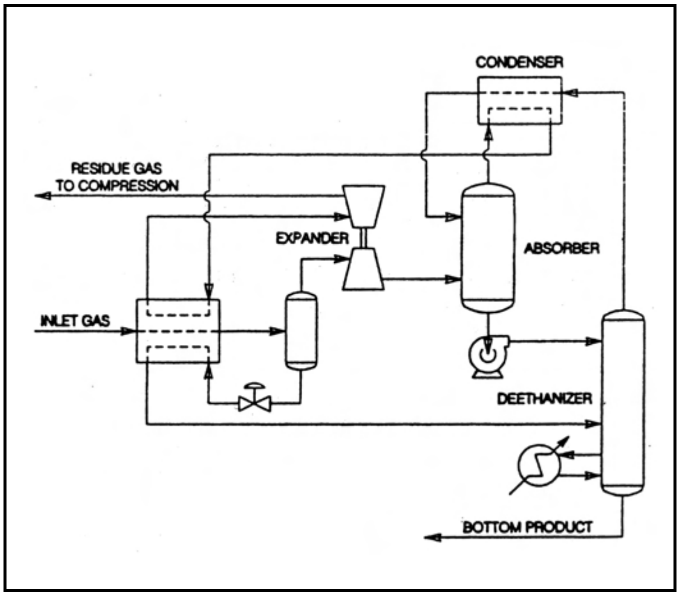

FIG. 16-26

IOR Process

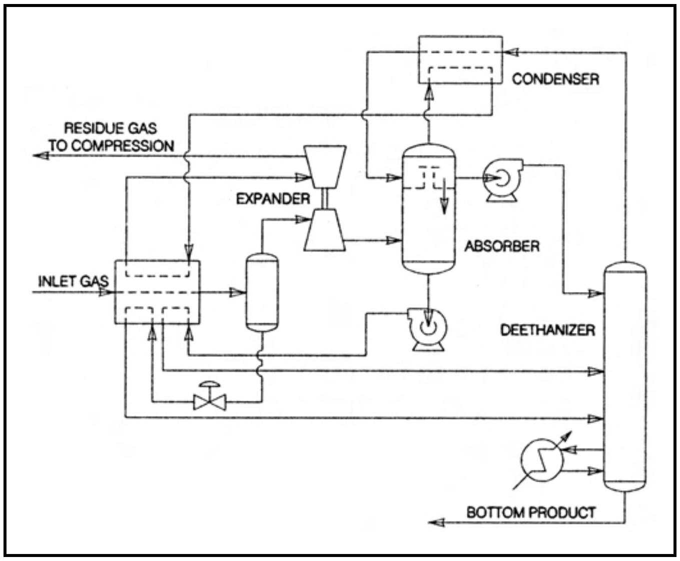

FIG. 16-27

Mixed Refrigerant NGL Recovery Process

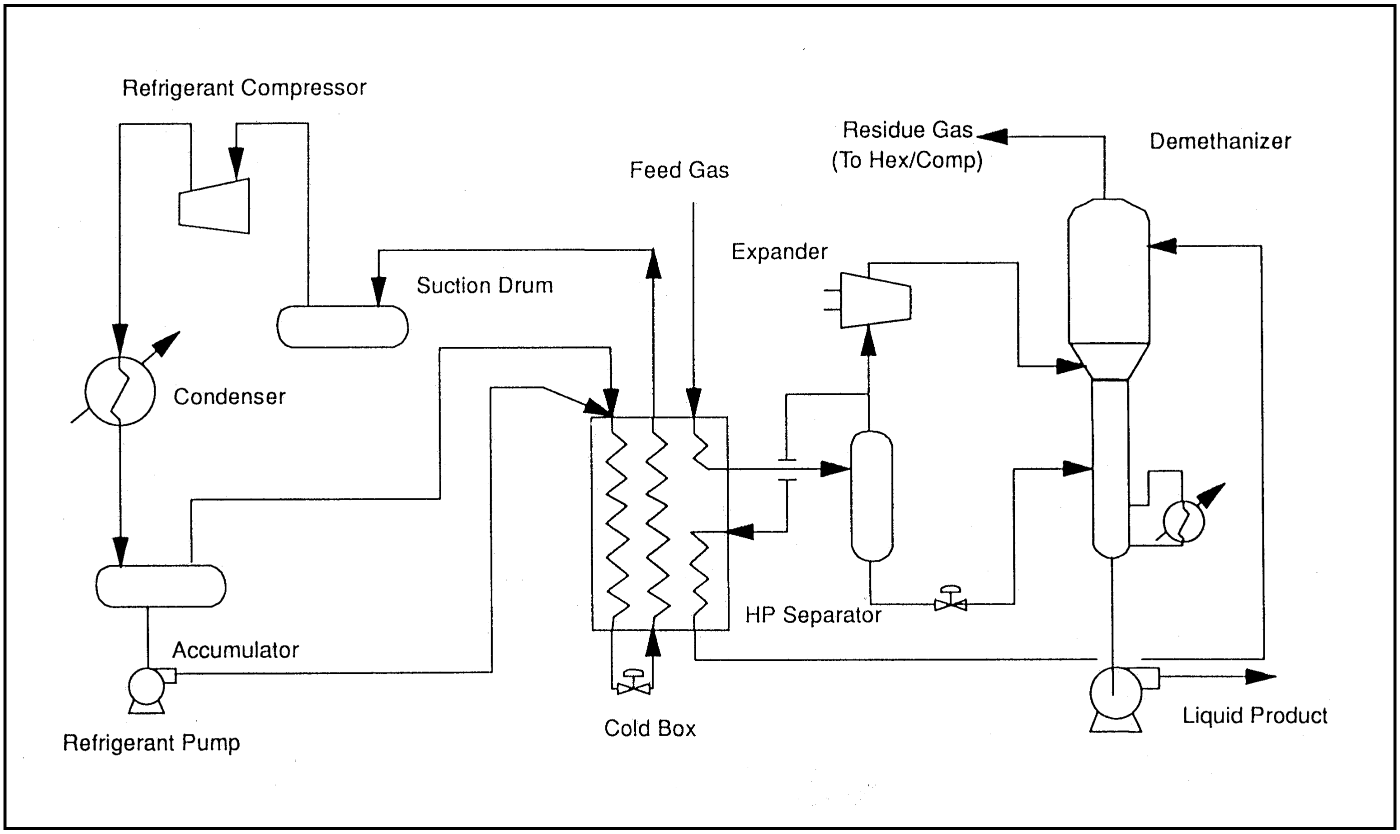

FRACTIONATION CONSIDERATIONS

In all NGL recovery processes, one of the final steps in the plant is the production of the desired liquid product by use of a fractionation column. This column produces the specification product as a bottom product with the overhead stream being recycled to the process or sent out of the plant as residue gas product. This mixed product then needs to be separated into usable products in a series of one or more fractionation columns. The number and arrangement of these columns is dependent on the desired product slate.

If the NGL stream is an ethane plus stream the first step is to separate the ethane from the propane and heavier components in a deethanizer. The propane is then separated from the butane and heavier components in a depropanizer. If further processing is desired the butane may be separated in a debutanizer and the butanes further separated in a butane splitter column. The butane splitter is only used when a differential value can be realized for the isobutane versus the mixed butane stream. A schematic of a four column fractionator is shown in Fig. 16-28. Section 19 in the Data Book covers the specifics of fractionation systems for NGL streams.

MERCURY REMOVAL

It is not unusual for gas streams to contain 1 to 10 micrograms/Nm3 (approx. 0.1 to 10 ppbv) of mercury. Some gas streams have been reported to have over 100 micrograms/m3 (approx. 10 ppbv). The mercury can attack aluminum in the plate fin heat exchangers used in most modern cryogenic plants. In order for the attack to occur, the mercury must be present as a free liquid. This situation cannot occur above –40F. Technically, mercury containing feedstocks can be handled without aluminum corrosion. Mercury containing equipment which is kept at low temperature can be decontaminated by carrying out a cold, then warm purge with bone dry gas. However, this is not a practical method to be assured that mercury attack does not occur.

The mercury in the feed gas can be removed with a mercury removal bed. The bed uses a sulfur based trapping material which reacts with the mercury to form cinnabar (HgS) on the bed. The trapping material is carried on activated carbon, zeolite or alumina. The trapping bed is usually located downstream of the dehydration. In this location, the gas is free of entrained liquids and water. Locating the bed in other locations is very dependent on the material used as recommended by the vendor. Figure 16-29 shows an example mercury removal bed. The mercury beds are designed to remove the mercury to 0.001 micrograms/Nm3.

Each vendor has criteria for sizing beds for their material but some rules of thumb are that the bed should be sized for a superficial flow velocity of about 50 ft/min and a residence time of 10 seconds. With the rather small mass of mercury which is typically removed, the beds can last many years between change outs.

FIG. 16-28

Four-column Fractionation System

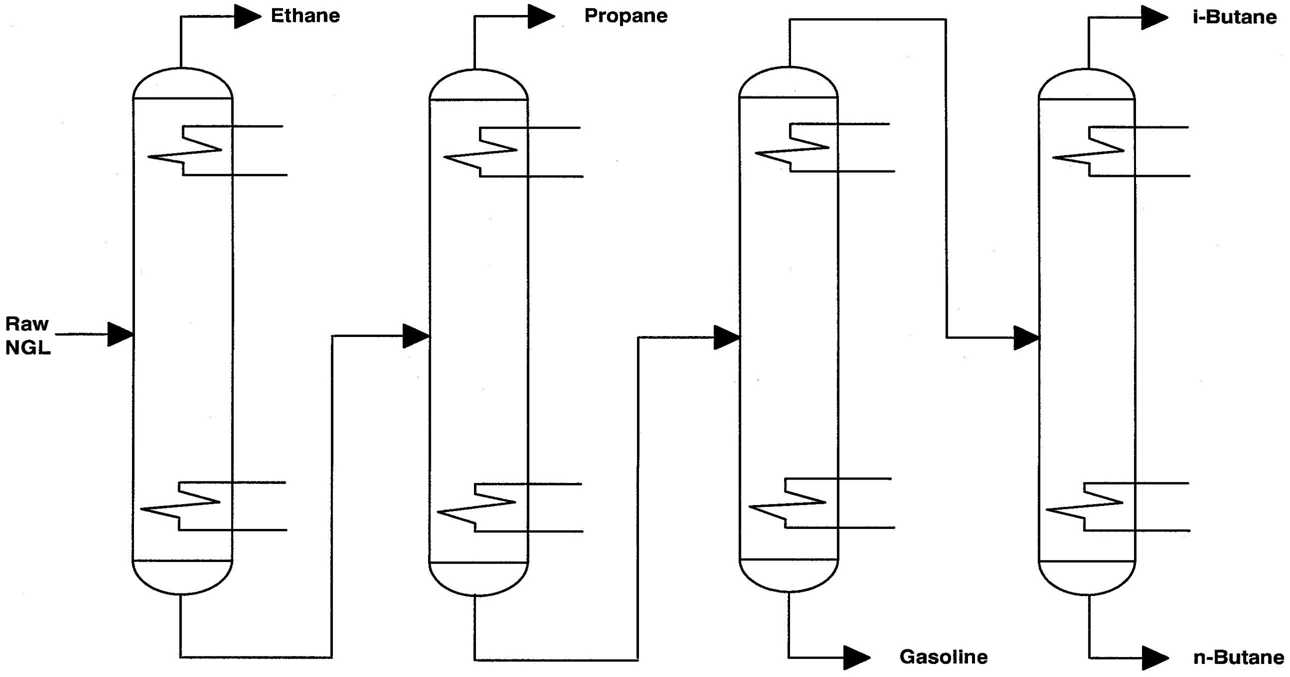

LIQUEFIED NATURAL GAS PRODUCTION

The principal reason for liquefying natural gas is the 600-fold reduction in the volume which occurs with the vapor-to-liquid phase change. This volume reduction is important in the transportation and storage of the gas. In the liquid state, the gas can be transported in discrete quantities, can be economically stored in tanks for use as required, and can be transported long distances not feasible with gas pipelines.

Because methane is the primary component of natural gas, the production of Liquefied Natural Gas (LNG) involves the chilling of the entire natural gas feed stream to cryogenic temperatures sufficient to totally condense the gas stream. Common to all LNG liquefaction processes is the need to pretreat the gas to remove components, such as CO2 and water, which will solidify in the liquefaction step. The liquefaction unit also has to remove hydrocarbon components, such as benzene and cyclohexane, which can solidify.

Two types of LNG facilities have been developed: 1) large base load units for continuous LNG production to export markets, and 2) small peak shaving plants for gas distribution systems. The large scale based load units are typically designed with emphasis on process efficiency. In addition to the process units involved in the liquefaction step, base load LNG plants tend to be large complex facilities which involve product storage, loading and complete stand-alone utility systems.

Peak shaving facilities differ from base load units in several aspects. Peak shaving plants are much smaller, operate only a portion of the year, and are often located near the point of use for the gas. The design emphasis is thus on capital cost minimization rather than thermodynamic efficiency.

In order to produce the low temperature necessary for liquefaction, mechanical refrigeration systems are utilized. Three types of liquefaction processes can be used to accomplish this refrigeration:

1. Cascade Refrigeration Process
2. Mixed Refrigerant Process
3. Precooled Mixed Refrigerant Process

FIG. 16-29

Mercury Removal Bed

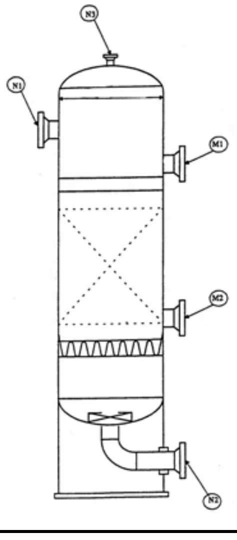

Each of these processes has been used for liquefaction facilities with the PreCooled process being the predominant technology in base load units. The Cascade and Mixed Refrigerant processes have both been used in a wide range of process sizes in both base load and peak shaving units with the Mixed Refrigerant process being the dominant technology in peak shaving units.

Cascade Refrigeration

The first LNG liquefaction units utilized the cascade refrigeration process. These facilities use the classical cascade cycle where three refrigeration systems are employed: propane, ethylene and methane. Two or three levels of evaporating pressures are used for each of the refrigerants with multistage compressors. Thus the refrigerants are supplied at eight or nine discrete temperature levels.Using these refrigeration levels, heat is removed from the gas at successively lower temperatures. The low level heat removed by the methane cycle is transferred to the ethylene cycle, and the heat removed in the ethylene cycle is transferred to the propane cycle. Final rejection of the heat from the propane system is accomplished with either water or air cooling.

Early facilities used a closed methane refrigeration loop. More modern designs use an open methane loop such as shown in Fig. 16-30 where the methane used for refrigerant is combined with the feed gas and forms part of the LNG product. The efficiency and cost of the process is dependent on the number of refrigeration levels provided in each refrigeration system.

The refrigeration heat exchange units traditionally were based on shell and tube exchangers or aluminum plate fin exchangers. Newer designs incorporate plate fin exchangers in a vessel known as “core-in-kettle” designs. A critical design element in these systems is the temperature approach which can be reached in the heat exchangers.

Mixed Refrigerant Processes

After initial developments of cascade LNG plants, the mixed refrigerant cycle was developed to simplify the refrigeration system. This system uses a single mixed refrigerant composed of nitrogen, methane, ethane, propane, butane and pentane. The refrigerant is designed so that the refrigerant boiling curve nearly matches the cooling curve of the gas being liquefied. The closeness of the match of these two curves is a direct measure of the efficiency of the process.

The process (Fig. 16-31) has two major components: the refrigeration system and the main exchanger cold box. The cold box is a series of aluminum plate fin exchangers which provide very close temperature approaches between the respective process streams. The low pressure refrigerant is compressed and condensed against air or water in a closed system. The refrigerant is not totally condensed before being sent to the cold box. The high pressure vapor and liquid refrigerant streams are combined and condensed in the main exchanger. The condensed stream is flashed across a J-T valve and this low pressure refrigerant provides the refrigeration for both the feed gas and the high pressure refrigerant.

Removal of pentane and heavier hydrocarbons from the feed gas is accomplished by bringing the partially condensed gas out of the cold box and separating the liquid at an intermediate temperature. The liquid removed is then further processed to produce a specification C_5+ product. Light products from this separation are returned to the liquefaction system.

FIG. 16-30

Nine-stage Cascade Liquefaction Process[10]

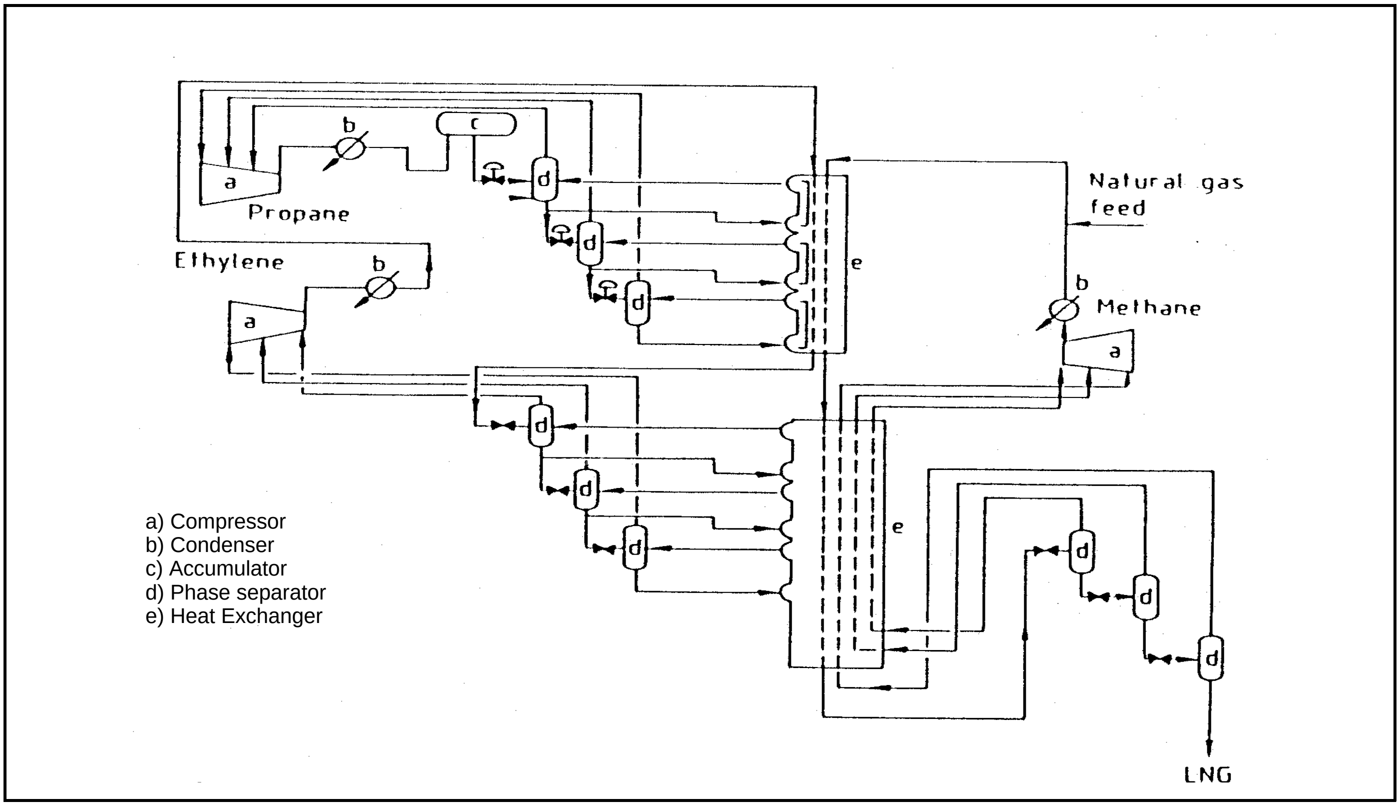

FIG. 16-31

Mixed Refrigerant Liquefaction Process[12]

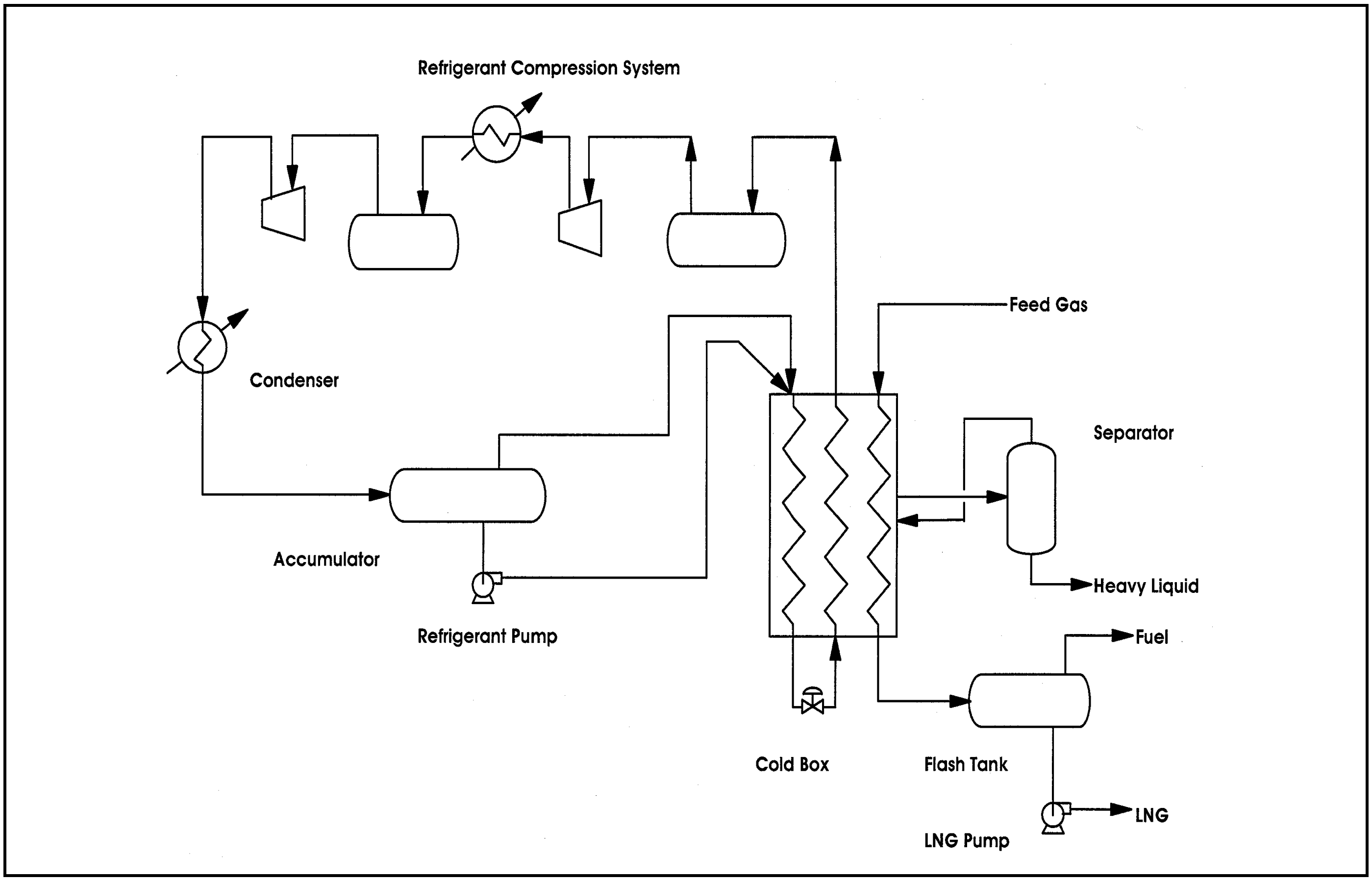

Precooled Mixed Refrigerant Process

The propane precooled mixed refrigerant process (Fig. 16-32) was developed from a combination of the cascade and mixed refrigerant processes. In this process, the initial cooling of the feed gas is accomplished by using a multistage propane refrigeration system.The gas is cooled with this system to around –40°F at which point the gas is processed in a scrub column to remove the heavy hydrocarbons. The gas is then condensed in a two step mixed refrigerant process. The chilling of the gas is accomplished in a single, large, spiral-wound heat exchanger. This exchanger allows extremely close temperature approaches between the refrigerant and the gas to be achieved.

The mixed refrigerant in this process is a lighter mixture composed of nitrogen, methane, ethane and propane with a molecular weight around 25. The mixed refrigerant after recompression is partially cooled with air or water and then further cooled in the propane refrigeration system. The partially condensed refrigerant from the propane chilling is separated and the high pressure vapor and liquid streams sent separately to the main exchanger. The liquid is flashed and provides the initial chilling of the gas. The high pressure vapor is condensed in the main exchanger and provides the low level, final liquefaction of the gas. As in the other processes, the LNG leaves the exchanger subcooled and is flashed for fuel recovery and pumped to storage.

SOLIDS FORMATION

In addition to the obvious need for water removal from the gas stream to protect from blockage in the cryogenic sections of a plant, consideration must be given to the possible formation of other solids or semi-solids in the gas stream. Amines, glycols, and compressor lube oils in the gas stream can form blockages in the system. Generally these contaminants will form a blockage upstream of an expander, in the lower temperature exchange circuit, or on the screen ahead of an expander.

Carbon dioxide can form as a solid in lower temperature systems. Fig. 16-33 will provide a quick estimate for the possibility of formation of solid CO_2. If operating conditions are in the methane liquid region as shown by the insert graph, the dashed solid-liquid phase equilibrium line is used. For other conditions the solid isobars define the approximate CO_2 vapor concentration limits.

For example, consider a pressure of 300 psia. At –170°F, the insert graph (Fig. 16-33) shows the operating conditions to be in the liquid phase region. The dashed solid-liquid phase equilibrium line indicates that 2.1 mol percent CO_2 in the liquid phase would be likely to form solids. However, at the same pressure and –150°F, conditions are in the vapor phase, and 1.28 mole percent CO_2 in the vapor could lead to solids formation. This chart represents an approximation of CO_2 solid formation. Detailed calculations should be carried out if Fig. 16-33 indicates operation in a marginal range.

FIG. 16-32

Propane Precooled Mixed Refrigerant Process[13]

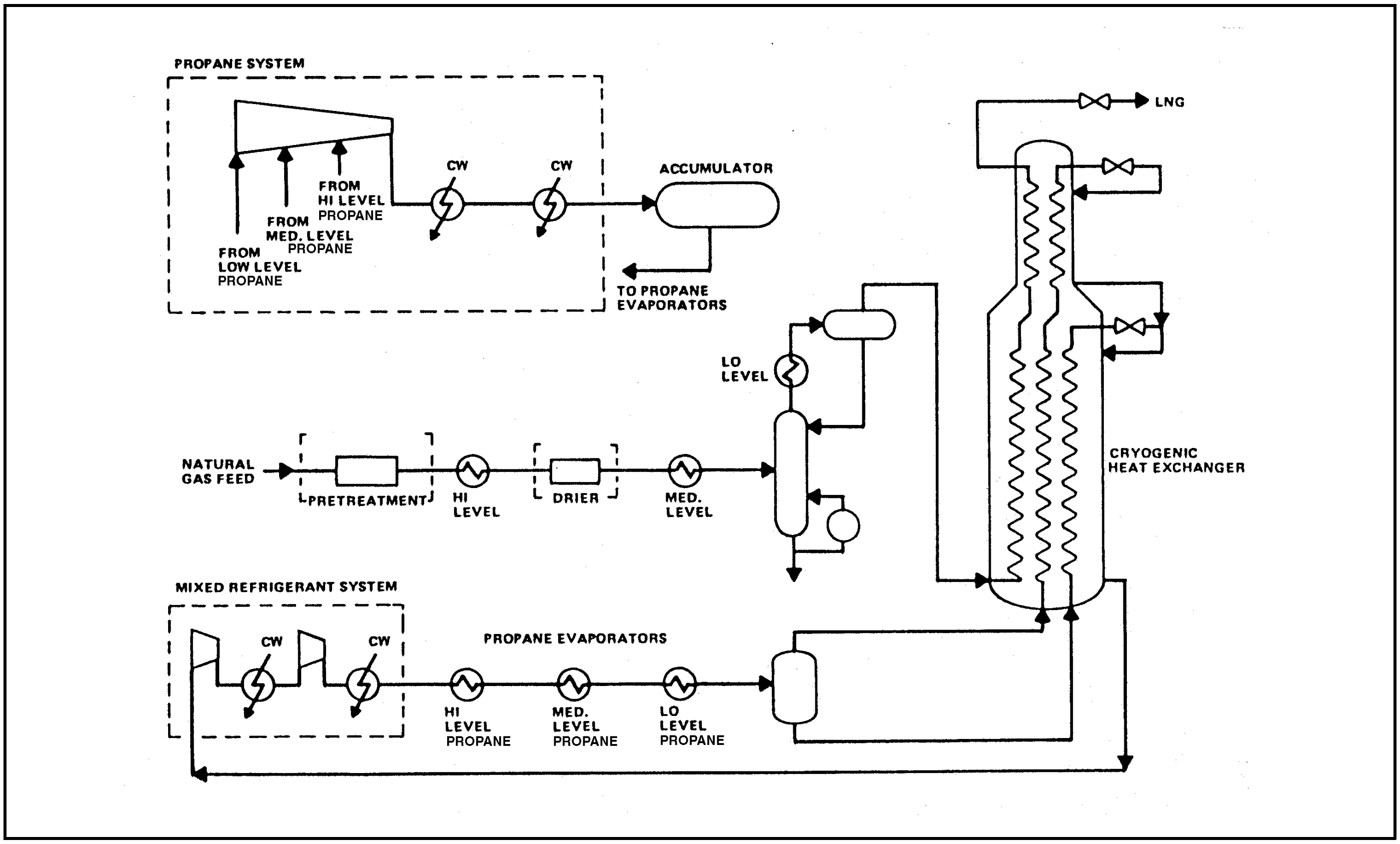

If the expander liquid is fed to the top tray of a demethanizer, the CO_2 will concentrate in the top equilibrium stages. This means that the most probable condition for solid CO_2 formation may be several trays below the top of the tower rather than at expander outlet conditions. Again, if Fig. 16-33 indicates marginal safety from solids formation, detailed calculations must be carried out.

In addition to CO2 and water which can solidify and cause blockage and damage in cryogenic equipment, hydrocarbons can also solidify at temperatures found in LNG plants. Figure 16-34 shows some freezing point temperatures for pure compounds which can be troublesome in LNG facilities.

Of the compounds listed, all can solidify at LNG temperatures but the solubility of these compounds in LNG are such that only at certain concentrations will there be solid formation. Cyclohexane and benzene are the compounds with the highest freezing points in this list. Cyclohexane is normally not present in significant quantity in produced gas. However, benzene is present in most gases and can be found in level in the 1000 ppm range, well above the solubility at LNG temperatures. Typically benzene and hexane are the compounds which are the most concern due to the combination of concentration in the gas and freezing point.

The solubility of these compounds in LNG streams is composition dependent. Figure 16-35 shows the solubility of benzene in ethane, Figure 16-36 shows the solubility of benzene in ethane. Comparison of these two figures shows that at say –260F, the solubility in methane is about 2 ppm while the solubility in ethane is 75 ppm. Heavier hydrocarbons such as propane and butane have even higher solubility numbers. Thus the composition of the LNG is an important factor in the solid formation concentration of this compound and other components in Figure 16-34. Typically, reduction of the benzene concentration to 10 ppm is sufficient to prevent solid formation. The GPA performed research in this area (See section 1) and has produced a predictive computer program to calculate freezing points for both hydrocarbons and CO2 in LNG streams.

NITROGEN REJECTION

Virtually all natural gas contains some amount of nitrogen which lowers the BTU value of the gas but is no particular problem. However, in some reservoirs gas has been discovered to contain larger amounts of nitrogen than can be tolerated due to contractual considerations on BTU content. In these cases, the operator has three options: 1) blend the gas with richer gas to maintain overall BTU value; 2) accept a reduced price or less secure market; or 3) remove the nitrogen to meet sales specifications. Options 1 and 2 are reasonable approaches to the problem but are very location specific.

When a nitrogen rejection unit (NRU) is selected as a process option for a gas stream, it is often combined with NGL recovery in an integrated plant design. A block flow diagram of a combined NGL/NRU facility is shown in Fig. 16-37. The overall objective of this facility is to produce a nitrogen vent stream, specification sales gas stream, and a specification NGL product. One of the primary contributors to facility cost is the required compression for the inlet gas and the sales gas.

FIG. 16-33

Approximate Solid CO₂ Formation Conditions

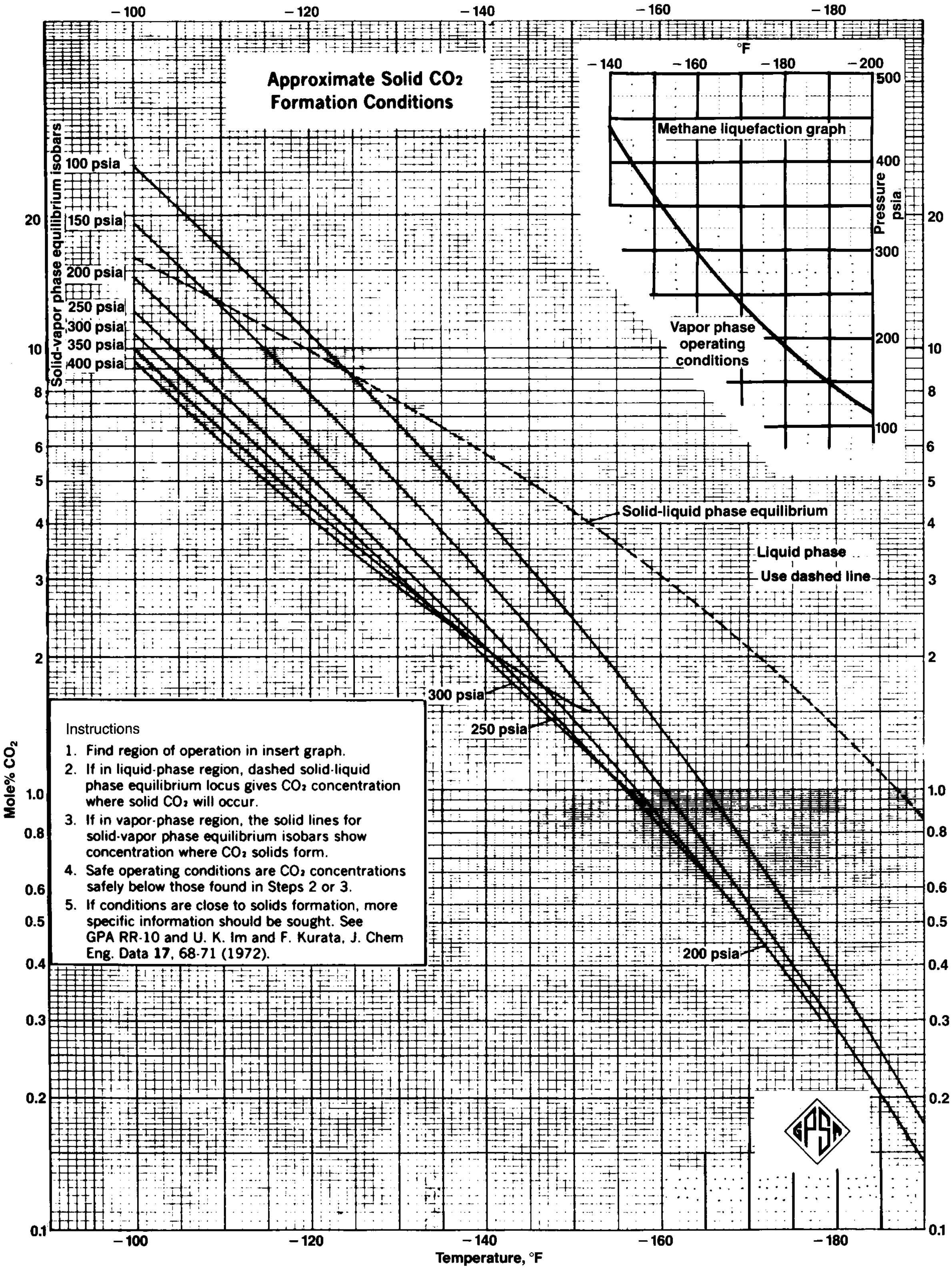

Instructions

1. Find region of operation in insert graph.
2. If in liquid-phase region, dashed solid-liquid phase equilibrium locus gives CO₂ concentration where solid CO₂ will occur.
3. If in vapor-phase region, the solid lines for solid-vapor phase equilibrium isobars show concentration where CO₂ solids form.
4. Safe operating conditions are CO₂ concentrations safely below those found in Steps 2 or 3.
5. If conditions are close to solids formation, more specific information should be sought. See GPA RR-10 and U. K. Im and F. Kurata, J. Chem Eng. Data **17**, 68-71 (1972).

FIG. 16-34

Problem Compounds in LNG

	Freezing Temp, F
Cyclohexane	43.79
Benzene	41.96
n-Decane	–21.33
n-Nonane	–64.26
n-Octane	–70.17
n-Heptane	–130.99
Toluene	–138.96
n-Hexane	–139.56

Regardless of the technology, recompression of the sales gas is usually required unless the residue gas can be marketed at 300 psig or less. Also, inlet compression is necessary if the gas is available at less than 650 psig.

Cryogenic Technology

Nitrogen rejection is typically carried out using cryogenic distillation technology. Due to the low temperature operation, the gas, after being compressed to required inlet pressure, is fed to a pretreatment unit for CO_2 and water removal. The CO_2 will freeze at –70°F and therefore must be removed to 50-200 ppmv levels. Typically, this removal is accomplished with amine treating which can easily remove CO_2 to acceptable levels. The dehydration step is carried out with molecular sieve dehydration. Another impurity which must be addressed is mercury content of the feed gas. Mercury can attack the aluminum heat exchangers in the low temperature section. Typically removal is accomplished with an adsorbent bed downstream of the dehydration.

The exact design of this nitrogen rejection unit is a strong function of the nitrogen content. For nitrogen contents below 20%, a heat pump cycle such as shown in Fig. 16-38 has been used. The drawback to this process is the heat pump compressor required. A more modern design utilizes a two-column design with a prefractionator. At higher nitrogen contents, a two column system such as in Fig. 16-39 is the choice. This design is quite flexible and can be used at nitrogen contents above 50%. Also, a recycle compressor can be added to handle nitrogen contents below 20%. New proprietary two- and three-column designs have been developed recently which have decreased the cost of NRU distillation cold box designs by about 25%. Variable nitrogen contents require preplanning and careful design to ensure efficient operation over a range of compositions

The NGL recovery may be designed for ethane and heavier recovery or propane and heavier recovery. Since NGL recovery is also a low temperature process, it is easily integrated with the nitrogen rejection into an integrated design. The NGL recovery is a traditional turboexpander setup except that the front-end heat exchange is integrated with the nitrogen and sales gas streams from the NRU section. The incremental cost for NGL recovery may be quite small because many of the required process steps such as dehydration and compression are already present.

The sales gas product from an NRU is produced at low pressure. Recompression to pipeline pressures can represent a large portion of the capital and operating costs. Newer NRU designs have optimized the product pressure by producing two methane streams at different pressures. Approximately two thirds of the sales gas can be produced at 300 psig and the other third at 100 psig. This is in sharp contrast to early designs where all the methane was produced at 100 psig or less. This modification significantly reduces the horsepower requirements.

Recovery Efficiencies

In the separation of nitrogen from natural gas, high purity products are readily achievable. Sales gas purity of 2% nitrogen is common. Higher purities come at a fairly sharp increase in cost. Lesser purities result in some savings but do not usually swing the economics. The hydrocarbon losses in the nitrogen vent stream are typically specified in terms of percent hydrocarbon recovery with 98% hydrocarbon recovery being achievable. Lower recoveries impact the cost of the project, but recoveries below 95% usually result in significant hydrocarbon loss and could be an environmental problem with the nitrogen vent stream. NGL recovery efficiencies associated with an integrated NGL/NRU can be quite high. Ethane recovery of 80 % with virtually complete C_3+ recovery is typical. If ethane recovery is not desired, the process can be designed for high C_3+ recovery and incidental ethane recovery.

New Technology

In addition to improvements in the cryogenic technology, other technologies have been developed for NRUs. The first is the use of a solvent to separate the nitrogen from the hydrocarbon components. This process has the advantage of not requiring CO_2 removal or deep dehydration. The main drawback is that the hydrocarbon components are actually absorbed and regenerated at low pressure. Thus, the recompression costs would be much higher than with the cold box technology. Also, large circulation rates and the corresponding pumping can be required. This technology has not replaced the cryogenic approach but is in the early stages of development.

Another alternative technology utilizes molecular sieves to separate the nitrogen. This technology also tolerates CO_2 and water. Because the molecular sieve bed sizes are proportional to the gas volume being treated, this process has been used for smaller volume applications. The adsorption/desorption cycle is quite similar to molecular sieve dehydration. Such a process could be instrumented quite easily for unattended operation. The major drawback to this process is that the methane product is produced at low pressure requiring more recompression than cold box technology. Also, the waste nitrogen stream may have enough hydrocarbon to preclude venting of the nitrogen. If a fuel requirement is available which would utilize the waste nitrogen stream, hydrocarbon loss could be a minor consideration.

ENHANCED OIL RECOVERY

In order to increase oil production in many reservoirs, the injection of gas for enhanced oil recovery (EOR) has been carried out in numerous projects. The gas injection plan can lead to three different types of processing facilities. First, high methane or high nitrogen gas can be injected for pressure maintenance of the reservoir. In this case the gas is in a separate phase from the oil phase, and any gas produced is simply recycled to the reservoir. Processing of the gas in traditional gas processing facilities is often carried out.

FIG. 16-35

Solubility of Benzene in Methane

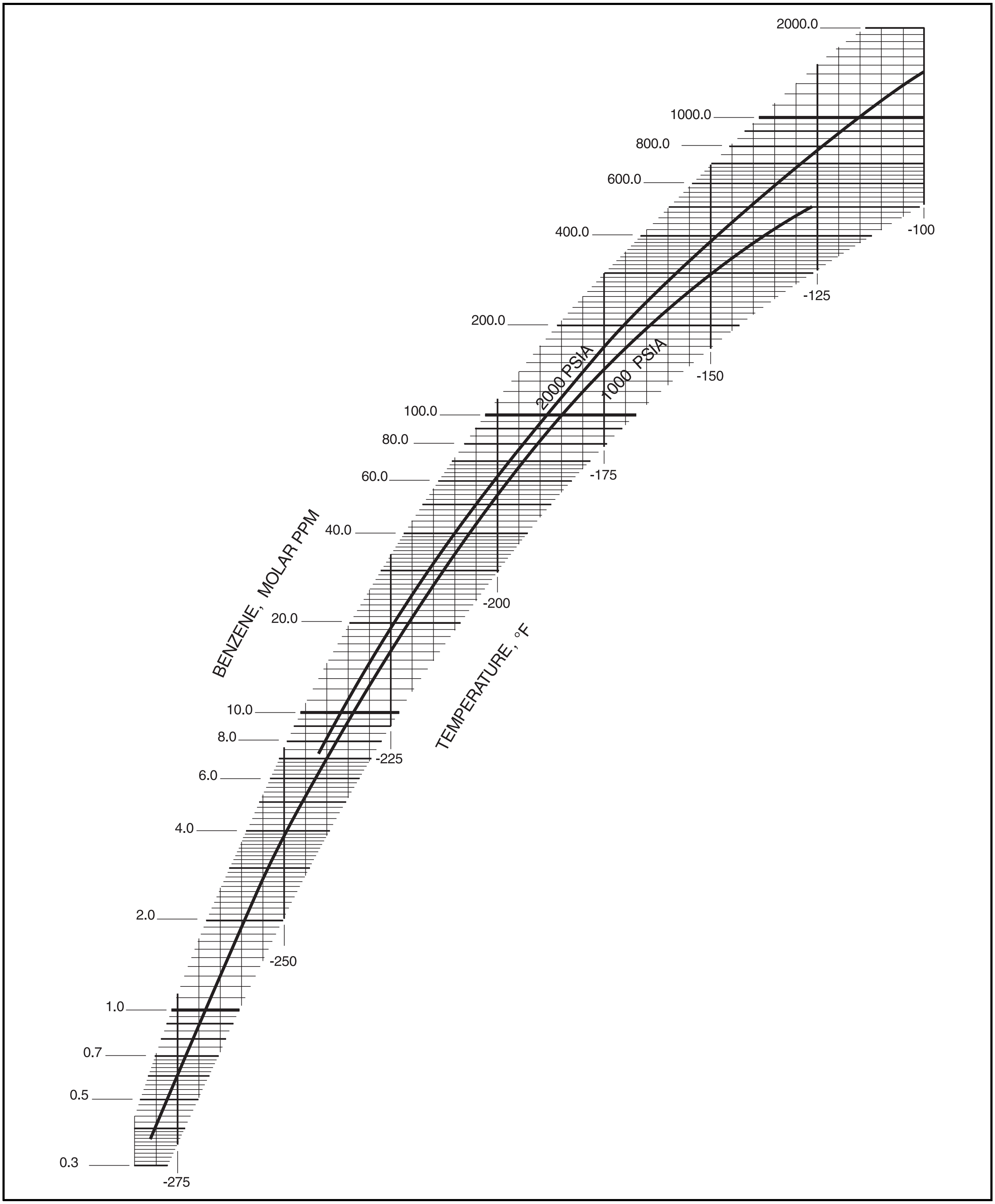

FIG. 16-36

Solubility of Benzene in Ethane

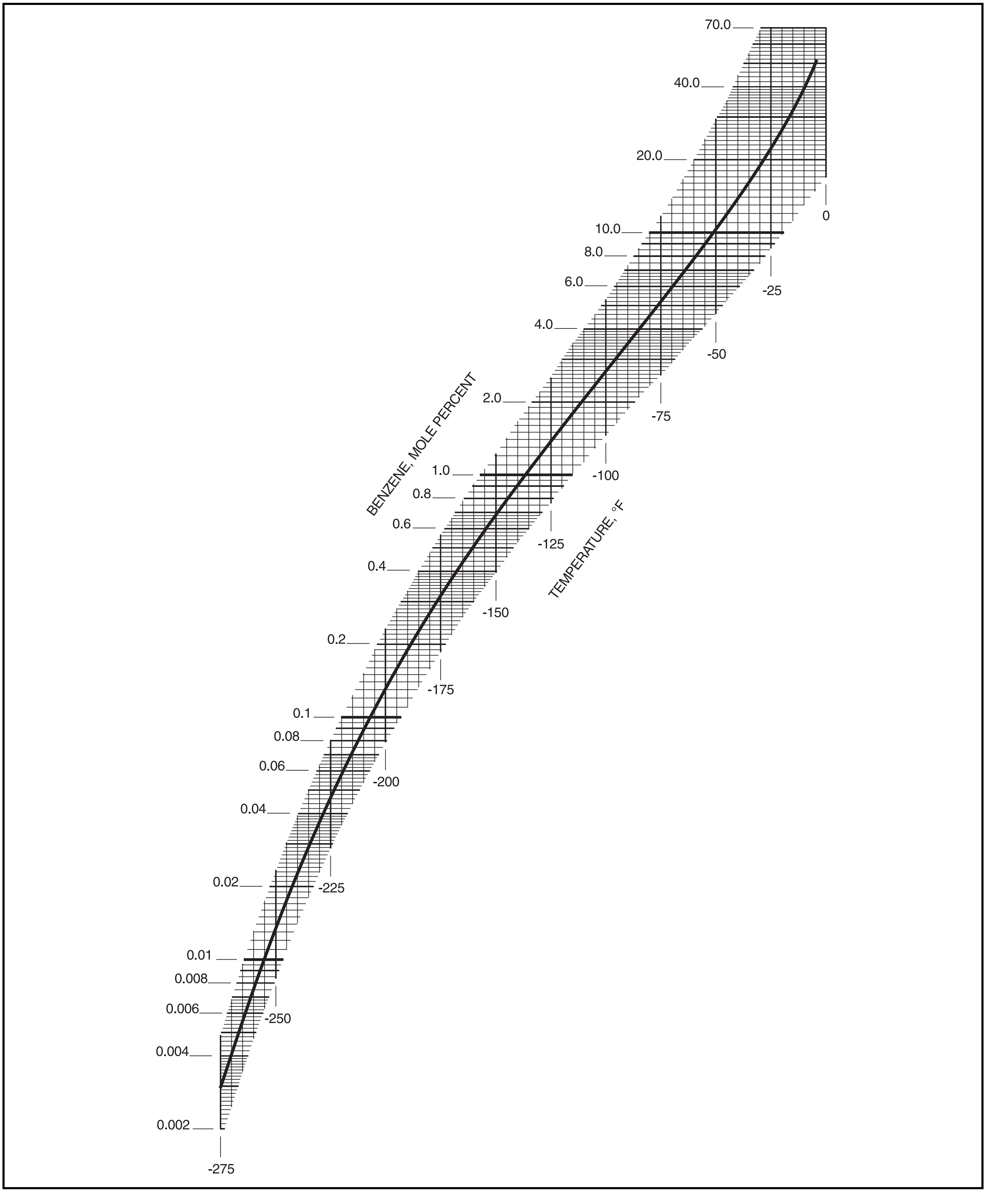

FIG. 16-37

Nitrogen Rejection Flow Diagram[14]

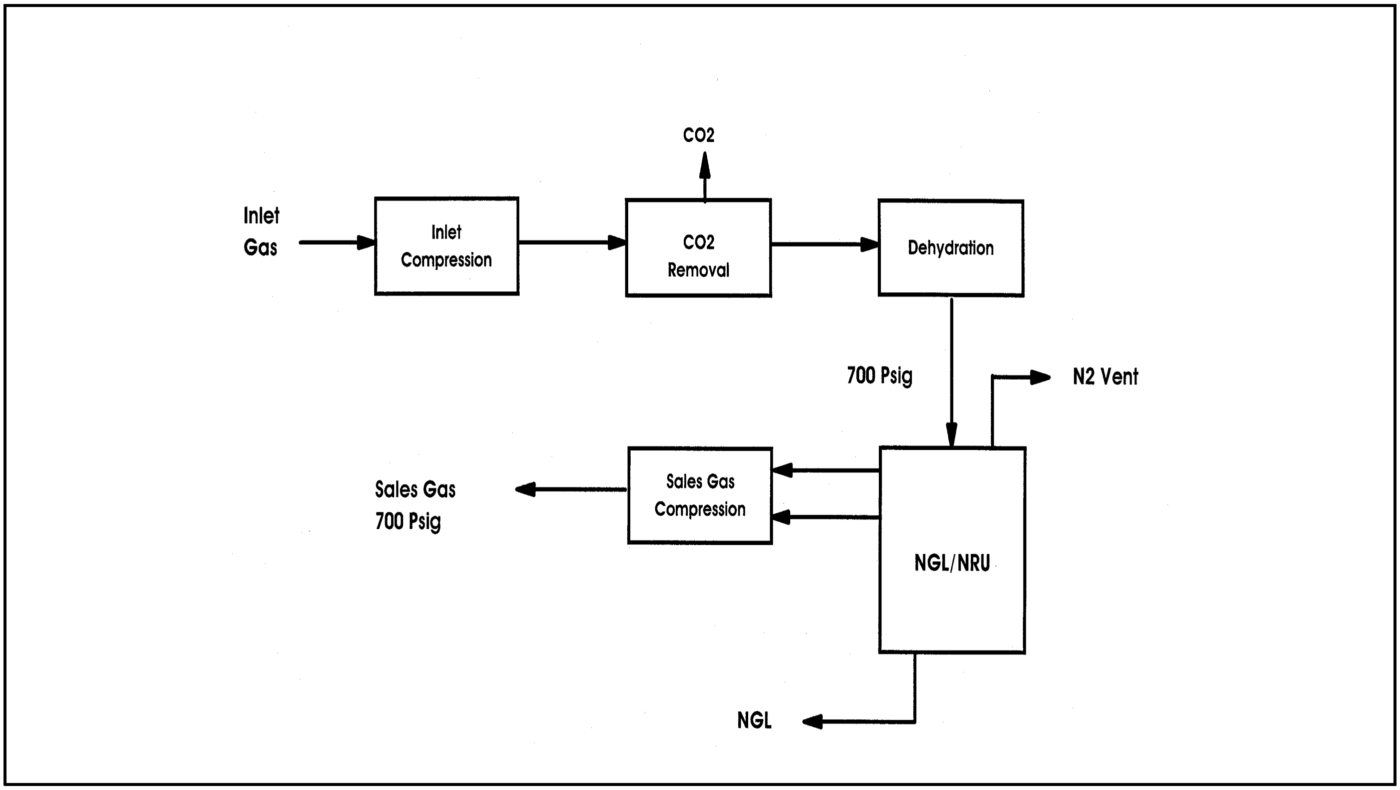

FIG. 16-38

Single-Column NRU[14]

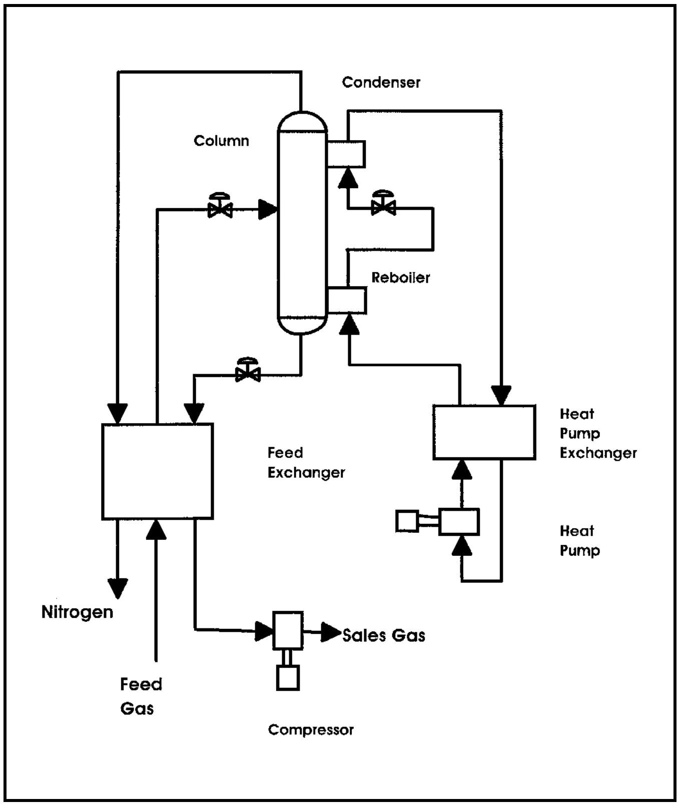

FIG. 16-39

Two-Column NRU[14]

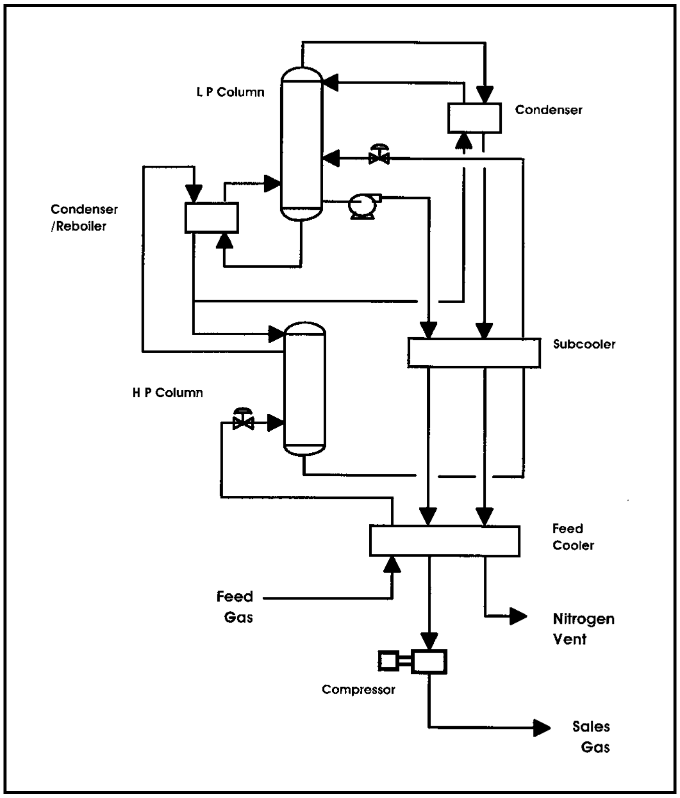

Second, the gas injected may be nitrogen with little or no hydrocarbons. In this case the injection conditions are chosen such that the nitrogen becomes miscible with the oil phase. As the oil is produced, the nitrogen and associated gas are produced as a mixed gas phase. This produced gas can be reinjected or processed for fuel, sales gas and NGL production. The processes used for this processing are as described in the previous paragraphs. The exact process considerations are somewhat different since the nitrogen is now desired at high pressure for reinjection, but the overall process is as described for naturally occurring high nitrogen gas.

The third type of EOR process involves the injection of CO_2. Large volumes of CO_2 are injected into the reservoir and become miscible with the oil phase. This CO_2 essentially scrubs the oil from the reservoir and can greatly increase oil production. As with the miscible nitrogen injection projects, the CO_2 is produced with the oil and gas and must be handled in the gas processing facilities. The CO_2 that is injected into the reservoir is typically purchased from third party suppliers and is the single greatest operating cost in the EOR project. Therefore, the CO_2 produced with the associated gas is valuable and must be recovered and recycled to the reservoir.

CO_2 Processing for EOR

The CO_2 produced in an EOR project can be separated from the hydrocarbon components using solvent or membrane processes as described in Section 21 of this Data Book. However, solvent processes such as amines, potassium carbonate, and physical solvents, as well as membrane systems, were not designed to handle the large volumes of CO_2 which are present in the EOR gas. The capital and operating costs of these systems increase in proportion to the acid gas content. Additionally, the CO_2 is produced at low pressure and typically saturated with water. The EOR project needs high pressure, dry CO_2 for reinjection.

An EOR gas processing plant is designed for three primary separations. First, the methane in the gas is needed for fuel and possibly for gas sale for additional revenue. Second, the produced gas often contains hydrogen sulfide (H_2S) which is removed from the CO_2 stream for safety considerations. Third, EOR gas is typically rich in recoverable NGLs. Fig. 16-40 is an example EOR production profile. This example shows the effect of the EOR operations on the gas to be handled. The CO_2 may start out at a few percent but eventually builds to over 90% as the gas volume increases. The NGL curve in Fig. 16-41 (on a CO_2 free basis) shows that the hydrocarbon portion of the gas gets continually richer. In fact, in most projects, the in-situ oil is actually stripped of the midrange hydrocarbons such that over 10% of the crude production is in the gas phase with the CO_2.

All of the required separations could be performed in a fractionation process which would produce dry CO_2 at elevated pressure as one of the products. Each step of the separation of C_1, CO_2, H_2S, and C_2+ components has technology issues which must be addressed with non-traditional concepts to achieve the necessary separations by fractionation.

FIG. 16-40

Example EOR Production Forecast[15]

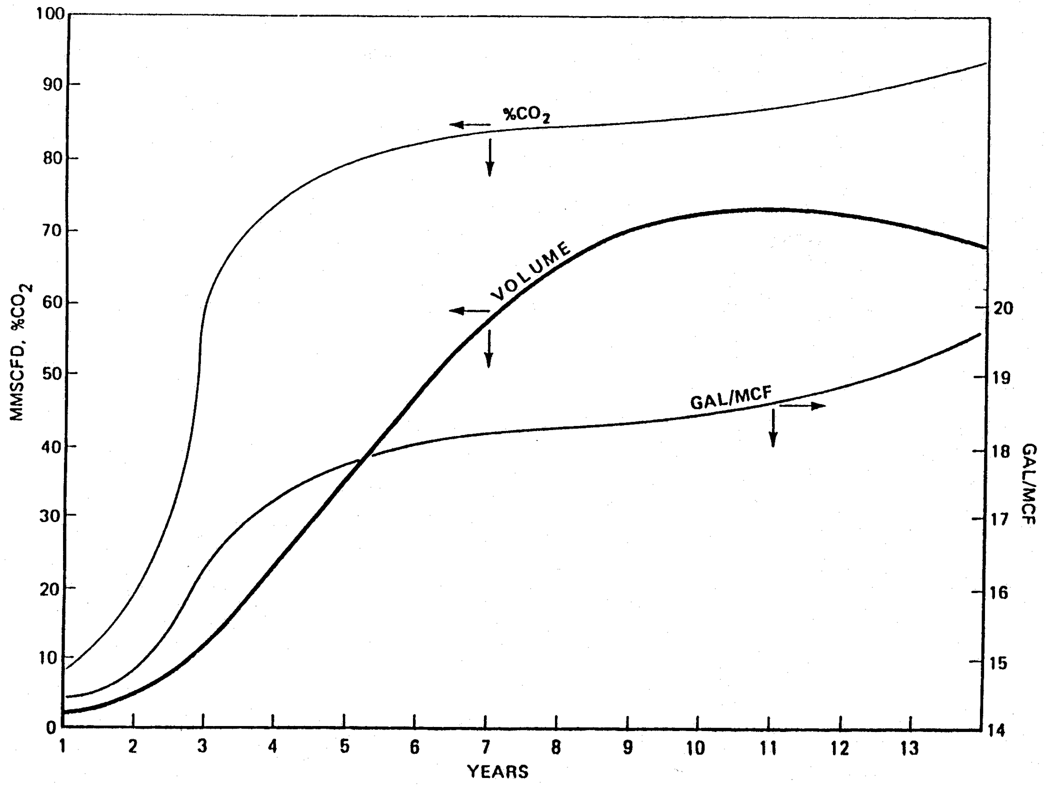

Separation of CO_2 and Methane

The relative volatility of CO_2 and methane at typical operating pressures is quite high, usually about 5 to 1. From this standpoint, distillative separation should be quite easy. However, at processing conditions, the CO_2 will form a solid phase if the distillation is carried out to the point of producing high purity methane. The phase equilibria considerations in this separation are discussed in detail in Section 25 of this Data Book. Fig. 16-41 illustrates the theoretical limits of methane purity which can be obtain in a binary CO_2 /methane system. In practice the purity limits of the methane product are around 10–15% CO_2.

One approach to solving this methane-CO_2 distillation problem is to use an extractive distillation approach developed by Ryan/Holmes. This concept involves adding a heavier hydrocarbon stream to the condenser in a fractionation column. The addition of this stream, which can contain ethane and heavier hydrocarbons, significantly alters the solubility characteristics of the system such that virtually any purity of methane can be produced.

Fig. 16-42 illustrates the effect of adding a third component (in this case n-butane) to a CO_2-methane distillation column producing 2% CO_2 overhead. By adding n-butane, a column operation profile without CO_2 solid formation can be achieved. Adding greater amounts of the additive increases the safety margin away from the CO_2 solid formation region. Other characteristics of this additive addition concept include:

- Raising the operating temperature of the overhead
- Increasing CO_2/methane relative volatility
- Permitting higher pressure operation by raising the mixture critical pressure

In fact, additive flow can be increased to the point that propane refrigeration can be used for the overhead condenser rather than cascade refrigeration.

CO_2-Ethane Separation

The separation of CO_2 and ethane by distillation is limited by the azeotrope formation between these components. An azeotropic composition of approximately 67% CO_2, 33% ethane is formed at virtually any pressure.

Fig. 16-43 shows the CO_2-ethane system at two different pressures. The binary is a minimum boiling azeotrope at both pressures with a composition of about two thirds CO_2 and one third ethane. Thus, any attempt to separate CO_2 and ethane to nearly pure components by distillation cannot be achieved by traditional methods. Extractive distillation is required.

As developed by Ryan and Holmes, the technique involves the addition of a heavier hydrocarbon, usually butane or heavier, to the top section of the distillation column.

The upper dashed line in Fig. 16-43 represents the phase behavior of a multicomponent feed distilled with a butane-plus additive. With this technique, virtually any purity of CO_2 and ethane is thermodynamically possible.

For the CO_2-methane separation, the additive is introduced in the condenser. In the CO_2-ethane separation, the additive is normally introduced several trays below the top of the column. The primary CO_2-ethane distillation is achieved below the additive feed tray. It is in this area that the relative volatility of the CO_2 to ethane is reversed to remain above 1.0 and

FIG. 16-41

Distillation Profile CH_4–CO_2 Binary[17]

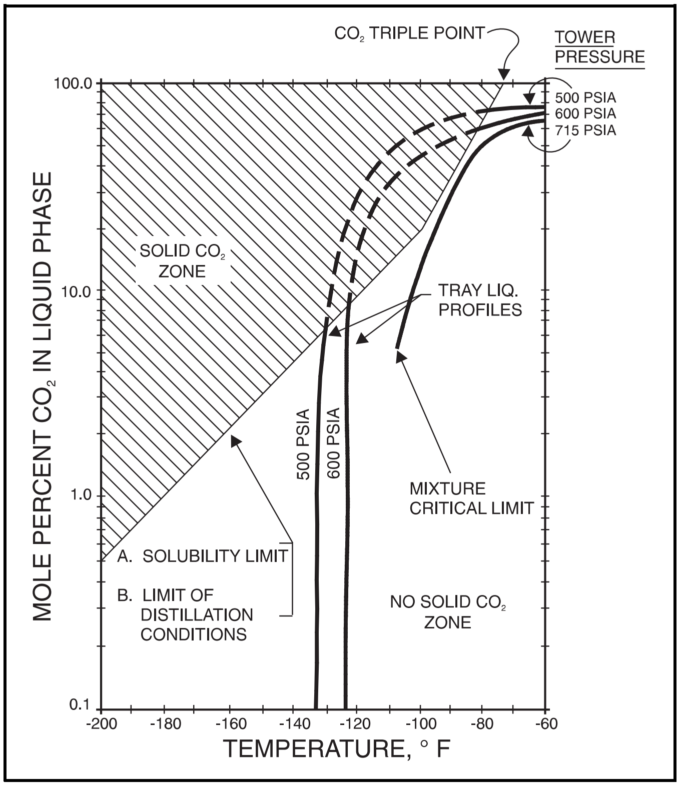

FIG. 16-42

Distillation Profile Binary Feed with nC_4 Additive[16]

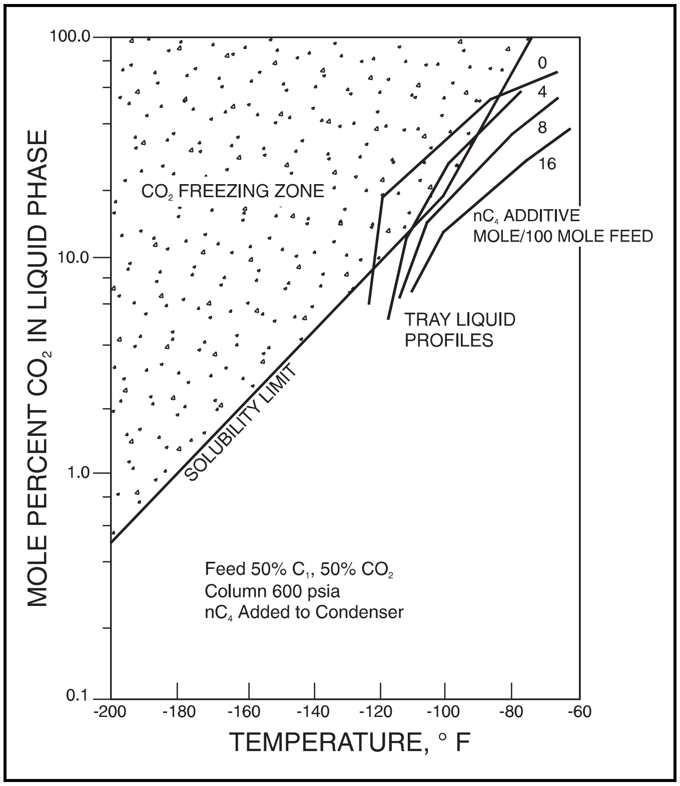

the azeotrope is circumvented. High relative volatilities are obtained at all points on and below the additive feed tray.

In the top portion of the column above the additive feed tray, no resolution of the azeotrope is achieved, as the relative volatility of CO_2 /ethane is less than 1.0. This part of the column serves as a recovery zone for the extractive distillation additive.

Separation of CO_2 and H_2S

The distillative separation of CO_2 and H_2S can be performed with traditional methods. The relative volatility of CO_2 and H_2S is quite small. While an azeotrope between H_2S and CO_2 does not exist, the vapor liquid equilibrium behavior for this binary approaches azeotropic character at high CO_2 concentrations.

In many cases the CO_2 is required to contain less than 100 ppmv H_2S. In order to achieve such purity a very large fractionation tower is required with large energy requirements.

Another aspect to be considered is the CO_2 in the bottom (H_2S concentrated) stream. If fed to a Claus sulfur recovery plant, the CO_2 /H_2S ratio is desired to be less than 2 to 1. Achieving such a low ratio will require high energy input in many cases.

By adding a third component, as in the CO_2-ethane separation system, the relative volatility of CO_2 to H_2S is significantly enhanced. Fig. 16-44 demonstrates the relative volatility enhancement due to addition of n-butane to the CO_2–H_2S binary system.

Thus, if a system containing CO_2, ethane and H_2S is processed in an extractive distillation column, the ethane and H_2S can be separated from the CO_2. The exact specification for purity and recovery will determine the system operating requirements. From a thermodynamic standpoint the CO_2 could be produced overhead with the ethane and the H_2S (and any C_3+ components) produced as a mixed bottom product.

Overall Process Configuration

The EOR processing steps can be arranged in a system to achieve all the desired separations. Although the process configuration can take on several variations, the configuration most often used in EOR processing plant is shown in Fig. 16-45.

In this configuration, the first step is the ethane/CO_2 separation in the ethane recovery column. This separation is carried out at pressures in the 350 psig range using refrigeration for reflux in the 0°F range. The CO_2 and lighter components are taken overhead, compressed to around 650 psig and sent to the CO_2 recovery column. This is a bulk removal column which produces CO_2 as a liquid bottom product. This CO_2 can then be pumped to reinjection. The overhead product is essentially a CO_2 /C_1 binary which is limited by CO_2 solid formation considerations. This binary stream is then separated by use of the extractive distillation step to produce a methane stream with low CO_2 content.

The bottoms products from the ethane recovery and demethanizer columns are combined and processed in the additive recovery column. In this column the additive, which is a

FIG. 16-43

Vapor-Liquid Equilibria CO_2–C_2H_6[16]

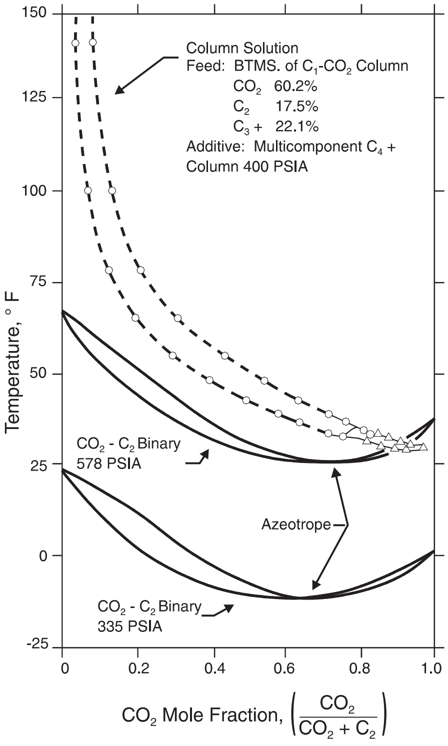

FIG. 16-44

CO_2–H_2S–nC_4 System at 600 psia[19]

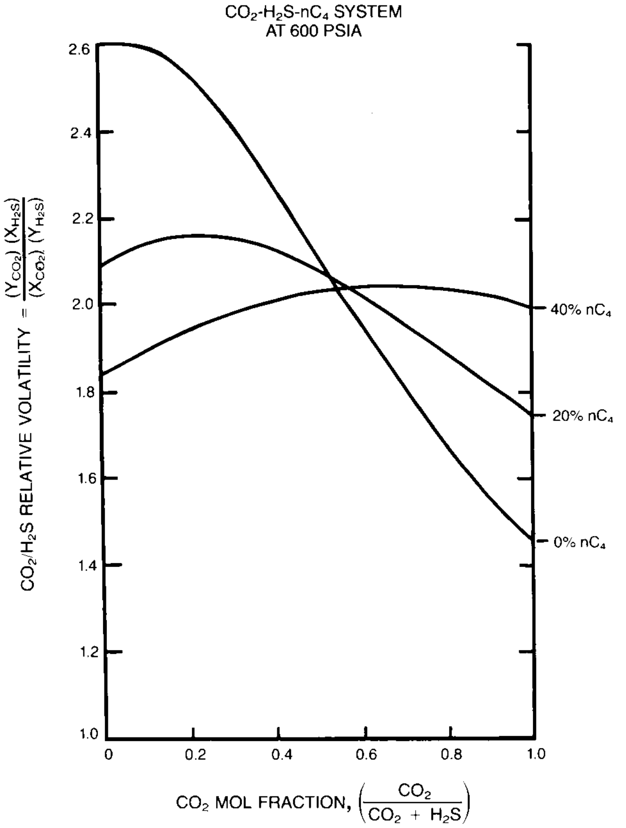

C_4+ stream, is separated from the lighter hydrocarbons for recycle to the distillation columns. A net C_4+ product is also produced. The additive used in the ethane recovery and demethanizer columns is continuously regenerated and reused much the same as lean oil in traditional gas processing applications. The distinct difference in this case is that this C_4+ stream is generated from the feed gas and is used as an extractive distillation agent rather than as an absorption agent.

The light NGL product produced overhead in the additive recovery column also contains any H_2S which was present in the feed gas and some residual CO_2. This product is usually treated in a small amine unit to meet sales specifications. The acid gas may then be sent to a sulfur recovery unit.

This four column EOR processing plant is designed to handle the wide range of feed rates and compositions encountered in EOR projects. In the design effort early, peak and late year cases must be investigated to ensure proper operation over time. This is especially important since the exact timing, flow rate and composition of EOR production are extremely difficult to predict. CO_2 breakthrough to the processing plant can occur rapidly. In some projects the CO_2 volume can triple in less than one year. As the EOR process has matured, other configurations have been developed which mix technologies such as membranes with Ryan/Holmes facilities to optimize the capital and operating costs over the project life.

FIG. 16-45

Four-Column Ryan/Holmes Process[15]

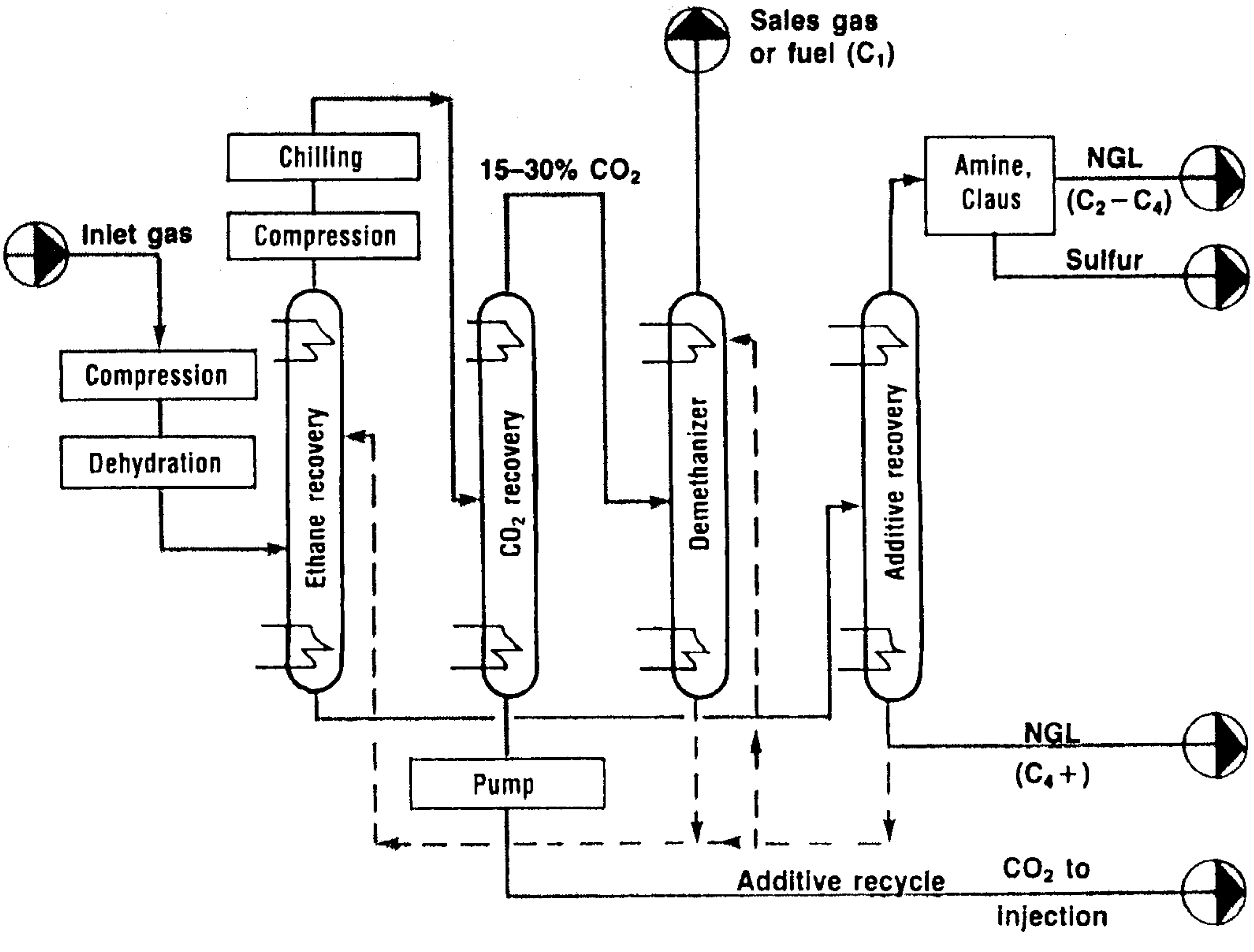

REFERENCES

1. Ewan, D.N., Lawrence, J.B., Rambo, C.L., and Tonne, R.R., “Curves Analyze Cryogenic Process Economics,” *Oil & Gas Journal*, August 12, 1974, pp. 119-122.
2. Maddox, R.N., and Erbar, J.H.,”Low-Pressure Retrograde Condensation,” *Oil & Gas Journal*, July 1977.
3. Maddox, R.N. and Moshfeghian, M., Private Communication, March 1997.
4. Petroleum Extension Service, “Field Handling of Natural Gas,” Third Edition, University of Texas, Austin, TX, 1972, pp. 36-51.
5. Russell, T.H., “Truck-Mounted Plant Speeds Gas Processing,” *Oil & Gas Journal*, February 1, 1982, pp. 129-133.
6. Russell, T. H., “Straight Refrigeration Still Offers Processing Flexibility,” *Oil & Gas Journal*, January 24, 1977.
7. Petroleum Extension Service, “Plant Processing of Natural Gas,” University of Texas, Austin, TX, 1974, pp. 19-36.
8. Crum, F. S., “Application of J-T Plants for LP-Gas Recovery,” 60th Annual GPA Convention, San Antonio, TX, March 23-25, 1981.
9. Wilkinson, J.D. and Hudson, H.M., “Turboexpander Plant Designs Can Provide High Ethane Recovery Without Inlet CO_2 Removal,” 32nd Annual Gas Conditioning Conference, Norman, OK, March 8-10, 1982.
10. *Ulmann’s Encyclopedia of Industrial Chemistry*, VCH Publishers, New York, NY, 1991, Vol 17, pp. 100-109.
11. Houser, C.G. and Krusen, L.C., “Phillips Optimised Cascade LNG Process,” Gastech 96, Vienna, Austria, December 3-6,1996.
12. Price, B.C. and Mortko, R.A., “PRICO–A Simple, Flexible Proven Approach to Natural Gas Liquefaction,” Gastech 96, Vienna, Austria, December 3-6,1996.
13. Chatterjee, N., Kinard, G.E., and Geist, J.M., “Maximizing Production in Propane Precooled Mixed Refrigerant LNG Plants,” Seventh Conference on Liquefied Natural Gas, Jakarta, Indonesia, May 15-19, 1983.
14. Price, B.C., “NRU’s Upgrade Production, Cut Costs,” *American Oil and Gas Reporter*, March 1994, pp. 56-60.
15. Price, B.C., “Looking at CO_2 Recovery in Enhanced Oil Recovery Projects,” *Oil & Gas Journal*, December 24, 1984, pp. 48-53.
16. Holmes, A.S., Ryan, J.M., Price, B.C., and Styring, R.E., “Pilot Tests Prove Out Cryogenic Acid-Gas/Hydrocarbon Separation Processes,” 61st Annual GPA Convention, Dallas, TX, March 15-17, 1982.
17. Nagahana, K., Kobishi, H., Hoshino, D., and Hirata, M., “Binary Vapor-Liquid Equilibria of Carbon Dioxide-Light Hydrocarbons at Low Temperatures,” J. Chem. Eng. Japan 7, No. 5, p. 323 (1974).
18. Sobocinski, D.P., Kurata, F., “Heterogeneous Phase Equilibria of The Hydrogen Sulfide-Carbon Dioxide System, AIChEJ.,5, No.4, p. 545 (1959).
19. Ryan, J.M., and Holmes, A.S., “ Distillation Separation of Carbon Dioxide from Hydrogen Sulfide,” U.S. Patent No. 4,383,841 (1983).

NOTES:

SECTION 17

Fluid Flow and Piping

Few flow problems can be solved with an acceptable degree of accuracy when using equations designed to fit idealized applications. Flow regimes and associated pressure drops are complex phenomena and require complex equations to predict their relationships. For engineering design purposes, several empirical formulas have been developed to fit particular circumstances in predicting flow capacity and pressure drop.

FIG. 17-1

Nomenclature

A = pipe cross sectional area, ft^2 ($A = \pi D^2/4$)
c = sum of allowances for corrosion, erosion, etc., in., Fig. 17-23
C = design parameter used in Hazen and Williams formula, Eq. 17-33
C_1 = discharge factor from Fig. 17-8
C_2 = size factor from Fig. 17-9
d = internal diameter of pipe, in.
d_o = outside pipe diameter, in.
D = internal diameter of pipe, feet
E = pipeline efficiency factor (fraction)
E' = longitudinal weld joint factor from ANSI B31.3, Fig. 17-23
E'' = longitudinal joint factor from ANSI B31.8, Fig. 17-24
f_f = Fanning friction factor
f_m = Moody friction factor ($f_m = 4.0\ f_f$)
f_n = single phase friction factor for Dukler calculation, from Eq 17-44
f_{tpr} = friction factor ratio for Dukler calculation, Fig. 17-17
F'' = construction type design factor used in ANSI B31.8, Fig. 17-24
F_{pv} = volume correction for a non-ideal fluid due to compressibility from Eq 17-13
$\sqrt{1/f_f}$ = transmission factor
g = acceleration due to gravity, 32.2 ft/sec^2
g_c = gravitational constant, 32.2 (ft • lbm)/(lbf • sec^2)
h_L = loss of static pressure head due to fluid flow, feet of fluid
H = total energy of a fluid at a point above a datum, from Eq 17-1
H_{Ld} = liquid holdup fraction (Dukler), Fig. 17-18
H_{Le} = liquid holdup fraction (Eaton), Fig. 17-20
H_{Lf} = liquid holdup fraction (Flanigan), Fig. 17-19
I_L = liquid inventory in pipe, ft^3, from Eq 17-57
L = length of line, feet
L_m = length of line, miles
MW = molecular weight
N_x = Fig. 17-16 horizontal coordinate, ft/sec
N_y = Fig. 17-16 vertical coordinate, ft/sec
N_E = abscissa of Eaton correlation, Fig. 17-20
N_{Lv} = liquid velocity number, from Eq 17-53
N_{gv} = gas velocity number, from Eq 17-54
N_d = pipe diameter number, from Eq 17-55
N_L = liquid viscosity number, from Eq 17-56
P = pressure, psia
P_1 = inlet pressure, psia
P_2 = outlet pressure, psia
P_{avg} = average pressure, psia, from Eq 17-16
P_b = base absolute pressure, psia (ANSI 2530 specification: $P_b = 14.73$ psia)
P_i = internal design pressure, psig
ΔP_{100} = pressure drop, psi/100 ft equivalent pipe length
ΔP_e = elevation component of pressure drop, psi
ΔP_f = frictional component of pressure drop, psi
ΔP_t = total pressure drop, psi
q = flow rate, gal./min
Q = flow rate of gas, cubic feet per day at base conditions
Q_L = liquid volumetric flow rate at flowing conditions, ft^3/sec
Q_g = gas volumetric flow rate at flowing conditions, ft^3/sec
Re = Reynolds number
Re_y = mixture Reynolds number for Dukler calculation, from Eq 17-45
S = specific gravity of flowing gas (air = 1.0)
S' = allowable stress, psi, Fig. 17-23
S'' = specified minimum yield strength, psi, Fig. 17-24
t = thickness, in., Figs. 17-23, 17-24
t_m = minimum required wall thickness, in., Fig. 17-23
T = absolute temperature of flowing gas, °R
T'' = temperature derating factor used in ANSI B31.8, Fig. 17-24
T_{avg} = average temperature, °R, [$T_{avg} = 1/2\ (T_{in} + T_{out})$]
T_b = base absolute temperature, °R (ANSI 2530 specification: $T_b = 520°R$)
V = single phase fluid velocity, ft/sec
V_{sg} = superficial gas velocity, ft/sec, from Eq 17-36
V_{sL} = superficial liquid velocity, ft/sec, from Eq 17-35
V_m = mixture velocity, ft/sec, from Eq 17-46

FIG. 17-1 (Cont'd)
Nomenclature

W = mass flow, lb/hr
X_A = Aziz fluid property correction factor (horizontal axis, Fig. 17-16)
Y_A = Aziz fluid property correction factor (vertical axis, Fig. 17-16)
Y' = coefficient found in Table 304.1.1, ANSI B31.3, Fig. 17-23
Z_{avg} = average compressibility factor
Z_e = pipeline vertical elevation rise, ft
ε = absolute roughness, ft
λ = flowing liquid volume fraction
μ_e = single phase fluid viscosity, $lb_m/(ft \bullet sec)$
μ = single phase fluid viscosity, cp
μ_g = gas viscosity, cp
μ_L = liquid viscosity, cp
μ_n = mixture viscosity for Dukler calculation, cp
ρ = single phase fluid density, lb/ft^3
ρ_{avg} = average density, lb/ft^3 $[\rho_{avg} = 1/2\ (\rho_{in} + \rho_{out})]$
ρ_a = air density at 60°F and 14.7 psia, 0.0764 lb/ft^3
ρ_w = water density at 60°F and 14.7 psia, 62.4 lb/ft^3
ρ_g = gas density, lb/ft^3
ρ_L = liquid density, lb/ft^3
ρ_k = two phase mixture density for Dukler calculation, lb/ft^3
σ = interfacial tension at flowing conditions, dyne/cm
σ_{wa} = interfacial tension of air and water at 60°F and 14.7 psia, 72.4 dyne/cm

Bernoulli's Theorem

The Bernoulli Theorem[1] is a mathematical derivation based on the law of conservation of energy. This theorem states that the total energy of a fluid at any particular point above a datum plane is the sum of the elevation head, the pressure head, and the velocity head. Stated mathematically:

$$H = Z_e + \frac{144\ P}{\rho} + \frac{V^2}{2g} \qquad \textbf{Eq 17-1}$$

If there are no friction losses and no energy is added to or taken from the system, H is constant for any point in the fluid. In reality, whenever fluid is moving there is friction loss (h_L). This loss describes the difference in total energy at two points in the system. Expressing the energy levels at Point 1 versus Point 2 then becomes:

$$Z_{e1} + \frac{144\ P_1}{\rho_1} + \frac{V_1^2}{2g} = Z_{e2} + \frac{144\ P_2}{\rho_2} + \frac{V_2^2}{2g} + h_L \qquad \textbf{Eq 17-2}$$

All practical formulas for fluid flow are derived from the above. Modifications to Eq 17-2 have been proposed by many investigators to account for the friction losses.

Fluid Physical Properties

The physical properties of a flowing fluid must be known to predict pressure drop in piping. The two properties entering into the solution of most fluid flow problems are viscosity and density.

Viscosity expresses the readiness with which a fluid flows when it is acted upon by an external force. Two types of viscosity measurements are used, absolute and kinematic. Absolute viscosity is a measure of a fluid's internal resistance to deformation or shear. Kinematic viscosity is the ratio of absolute viscosity to mass density. The absolute viscosity will be used for all calculations in this section.

Viscosity is temperature dependent. The viscosity of most liquids decreases with an increase in temperature, whereas that of gases increases. Pressure has almost no effect on the viscosity of liquids or near perfect gases. On the other hand, the viscosity of saturated or slightly superheated vapors is changed appreciably by pressure changes. The viscosity of steam is readily available, but the viscosity of other vapors may not be known.

Specific volume is the inverse of density. Specific gravity of a liquid is the ratio of the density of the liquid at a specified temperature to the density of water at 60°F. The specific gravity of gas is defined as the ratio of the molecular weight of the gas to the molecular mass of air.

$$S = \frac{MW\ (gas)}{MW\ (air)} \qquad \textbf{Eq 17-3}$$

Flow in Pipes and Reynolds Number

At low velocities, fluid molecules or particles carried by the fluid move in a reasonably straight line. Velocity of the fluid is maximum at the center of the pipe and zero at the pipe wall. This flow pattern is referred to as laminar. If the velocity is increased it will reach a critical point where fluid particles begin to show a random motion transverse to the direction of flow. This is the critical velocity. This random motion is typical of what is referred to as turbulent flow. Above the critical velocity the flow is considered to be completely turbulent even though there is always a boundary layer at the pipe wall where flow is laminar. In the turbulent zone the velocity profile is more nearly straight across the face of the pipe.

Reynolds developed a dimensionless number that may be considered as the ratio of the dynamic forces of mass flow to the shear stress due to viscosity. The Reynolds number is:

$$Re = \frac{DV\rho}{\mu_e} \qquad \textbf{Eq 17-4}$$

If the Reynolds number is less than 2000, flow may be considered laminar. If it is above 4000, the flow is turbulent. In the zone between 2000 and 4000 the flow could be either turbulent or laminar, but cannot be predicted by the Reynolds number.

If a non-circular conduit is encountered, the Reynolds number can be approximated by using an equivalent diameter for D. The equivalent diameter would equal four (4) times the hydraulic radius. The hydraulic radius is defined as:

$$\text{Hydraulic Radius} = \frac{\text{Area of Flowing Fluid}}{\text{Wetted Perimeter}} \qquad \textbf{Eq 17-5}$$

This conversion would not apply to extremely narrow shapes where the width is small relative to the length. In such cases an approximation may be used wherein one-half the width of the passage is equal to the hydraulic radius.

Pressure Loss Due to Friction

Flow is always accompanied by friction. This friction results in a loss of energy available for work. A general equation for pressure drop due to friction is the Darcy-Weisbach[2] (often referred to as simply the Darcy) equation. This equation can be rationally derived by dimensional analysis, with the exception of the friction factor, fm, which must be determined experimentally. Expressed in feet of fluid this equation is:

$$h_L = \frac{f_m \, L \, V^2}{2 \, g \, D} \qquad \textbf{Eq 17-6}$$

Converting to pounds per square inch, the equation becomes:

$$\Delta P_f = \frac{\rho \, f_m \, L \, V^2}{(144) \, D \, (2g_c)} \qquad \textbf{Eq 17-7}$$

It should be noted that the Moody friction factor3, fm, is used in the equations above. Some equations are shown in terms of the Fanning friction factor, ff, which is one fourth of fm (fm = 4.0 ff). A graph of both Fanning and Moody friction factors as a function of Reynolds number appears in Fig. 17-2.

The Darcy-Weisbach equation is valid for both laminar and turbulent flow of any liquid, and may also be used for gases with certain restrictions. When using this equation, changes in elevation, velocity, or density must be accounted for by applying Bernoulli's theorem. The Darcy-Weisbach equation must be applied to line segments sufficiently short such that fluid density is essentially constant over that segment. The overall pressure drop is the sum of the Δ Pf values calculated for the individual segments. For gas applications the segmental length may be relatively short, as compared to liquid applications, since many gas applications involve compressible gases where gas densities vary with pressure.

Friction Factor and Effect of Pipe Roughness

When the fluid flow is laminar (Re<2000), the friction factor has a direct relationship to the Reynolds number, such that:

$$f_m = 64 / Re \quad \text{or} \quad f_f = 16 / Re \qquad \textbf{Eq 17-8}$$

Pipe roughness has no effect on the friction factor in laminar flow.

Substitution of the formula for Reynolds number, Eq 17-4, into Eq 17-8, yields the following:

$$f_m = \frac{64 \, \mu_e}{DV\rho} = \left(\frac{64}{V\rho}\right)\left(\frac{\mu}{1488}\right)\left(\frac{12}{d}\right) \qquad \textbf{Eq 17-9}$$

This expression can then be substituted for the friction factor in Eq 17-7, resulting in the following formula for pressure loss in pounds per square inch:

$$\Delta P_f = 0.000668 \, \frac{\mu L V}{d^2} \qquad \textbf{Eq 17-10}$$

Eq 17-10 is commonly known as Poiseuille's law for laminar flow.

When the flow is turbulent, the friction factor depends on the Reynolds number and the relative roughness of the pipe,

FIG. 17-2

Friction Factors[5]

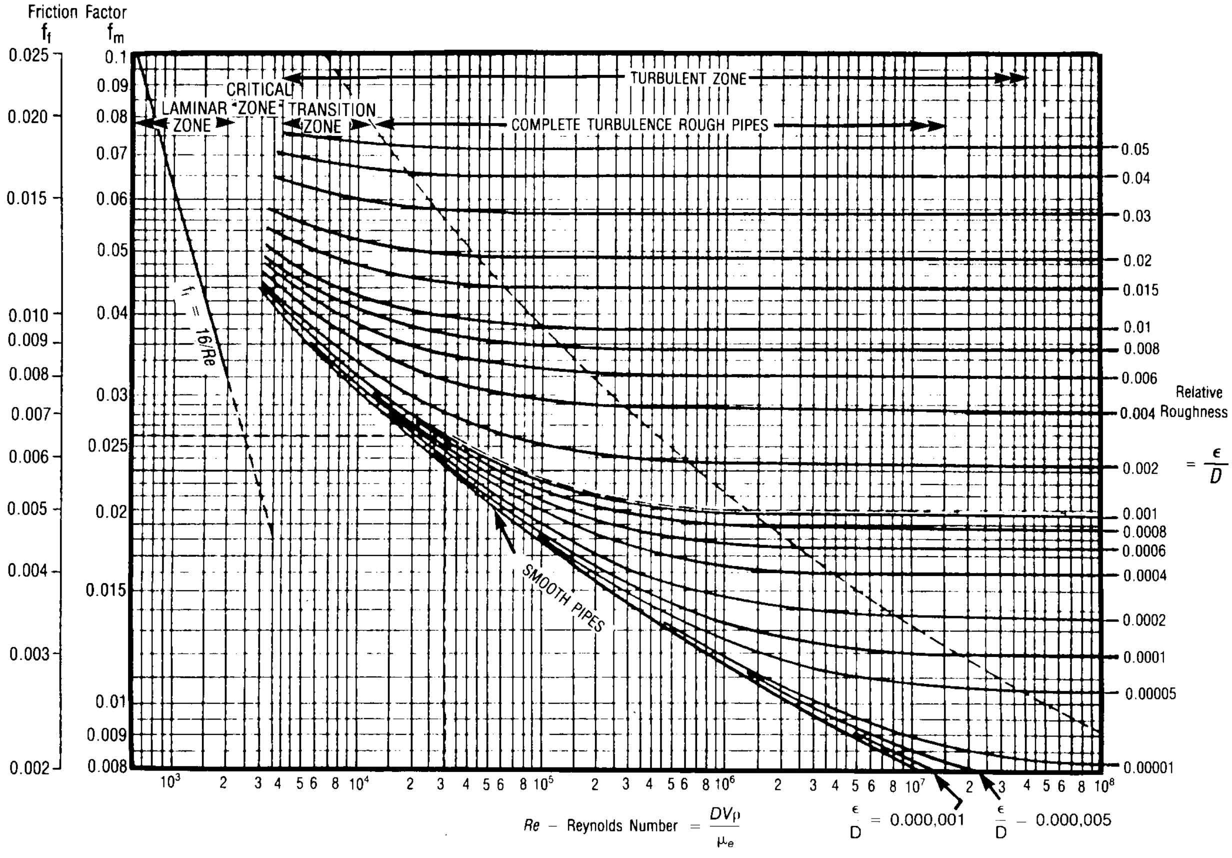

ε/D, which is the roughness of the pipe, ε, over the pipe diameter, D. Fig. 17-2 incorporates the relative roughness of the pipe into the determination of the friction factor. Fig. 17-3 indicates relative roughness and friction factors for various piping materials. These figures are based on the iterative solution of the following equation developed by Colebrook.4

$$\frac{1}{\sqrt{f_m}} = -2 \log_{10} \left(\frac{\varepsilon}{3.7\ D} + \frac{2.51}{\mathrm{Re}\ \sqrt{f_m}} \right) \qquad \textbf{Eq 17-11}$$

Various explicit equations have been presented which provide a direct solution for the friction factor. The equation below was proposed by Chen[30] and is accurate and is almost identical to the Colebrook equation over Reynolds Numbers (4000 to $4(10)^8$) and roughness factors (e/D) from 0.05 to $5(10)^{-7}$.

$$A = \log\left[\frac{\left(\frac{\varepsilon}{D}\right)^{1.1098}}{2.8257} + \left(\frac{5.8506}{\mathrm{Re}^{0.8981}}\right) \right] \qquad \textbf{Eq 17-11a}$$

$$f_m = \frac{1}{\left(-2 \bullet \log\left(\frac{\frac{\varepsilon}{D}}{3.7065} - \frac{5.0452 \bullet A}{\mathrm{Re}} \right) \right)^2} \qquad \textbf{Eq 17-11b}$$

Equivalent Length of Valves and Fittings

The pressure drop effects of valves and fittings can be accounted for by addition of the "equivalent lengths" of the fittings to the actual piping lengths. This augmented pipe length is then used in any of the following pressure drop calculation techniques. A table of equivalent lengths for a number of representative valves and fittings appears in Fig. 17-4.

Compressibility of Gases

For more accurate values of Z, refer to Section 23. For more approximate calculations, the value of the average compressibility factor, Z_{avg}, may be calculated from the following equations:

$$Z_{avg} = \frac{1}{(F_{pv})^2} \qquad \textbf{Eq 17-12}$$

and

$$F_{pv} = \left(1 + \left[\frac{(P_{avg})\ (3.444)\ (10^5)\ (10^{(1.785\ (S))})}{T_{avg}^{3.825}} \right] \right)^{0.5} \qquad \textbf{Eq 17-13}$$

Fig. 17-5 contains a plot of the deviation factor, F_{pv}^2.

An estimate for Z_{avg} at pressures below 100 psi is:

$$Z_{avg} = \frac{1}{1 + 0.0002\ P_{avg}} \qquad \textbf{Eq 17-14}$$

SINGLE PHASE FLOW

Transmission Line Gas Flow

Isothermal Flow — The steady-state, isothermal flow behavior of gas in pipelines is defined by a general energy equation of the form:

$$Q = 38.77 \left(\frac{T_b}{P_b}\right) E \sqrt{\frac{1}{f_f}} \left[\frac{P_1^2 - P_2^2}{S\ L_m\ T_{avg}\ Z_{avg}} \right]^{0.5} d^{2.5} \qquad \textbf{Eq 17-15}$$

This equation is completely general for steady-state flow, and adequately accounts for variations in compressibility factor, kinetic energy, pressure, and temperature for any typical line section. However, the equation as derived involves an unspecified value of the transmission factor, $\sqrt{1/f_f}$. The correct representation of this friction factor is necessary to the validity of the equation.

The friction factor is fundamentally related to the energy lost due to friction. In the derivation of the general energy equation, all irreversibilities and non-idealities, except for those covered by the real gas law, have been collected into the friction loss term.

Empirical methods historically and currently used to calculate or predict the flow of gas in a pipeline are the result of various correlations of the transmission factor substituted into the general energy equation.

Examination of the relationships presented by various authors shows that their forms differ primarily in the inherent or specified representation of the transmission factor which defines the energy lost in resistance to flow for various pipe sizes, roughnesses, flow conditions, and gases.

To obtain Eq 17-15, which is convenient for general calculations, a number of simplifying assumptions have been made. For other than pipeline sections with a very high pressure gradient, the change in the kinetic energy of the gas is not significant, and is assumed equal to zero. It is also assumed that the gas temperature is constant at an average value for the section considered; the compressibility factor is constant at the value characterized by the average gas temperature and pressure; and in the term giving the effect of elevation change, the pressure is constant at the average value. In the range of conditions to which pipeline flow equations are ordinarily applied, averages are usually sufficiently accurate. Average temperatures are calculated as indicated in Fig. 17-1.

The average pressure in the line can be computed by:

$$P_{avg} = \frac{2}{3}\left(P_1 + P_2 - \frac{P_1\ P_2}{P_1 + P_2} \right) \qquad \textbf{Eq 17-16}$$

In the absence of field data indicating otherwise, an efficiency factor, E, of 1.0 is usually assumed.

The AGA Equations — The AGA Equations were developed to approximate partially and fully turbulent flow using two different transmission factors. The fully turbulent flow equation accounts for the relative pipe roughness, ε/D, based on the rough-pipe law.[4] This equation uses the following transmission factor:

$$\sqrt{1/f_f} = 4 \log_{10}\left(\frac{3.7\ D}{\varepsilon} \right) \qquad \textbf{Eq 17-17}$$

When the transmission factor for fully turbulent flow is substituted in the general energy equation (Eq 17-15), the AGA Equation for fully turbulent flow becomes:

$$Q = 38.77 \left(\frac{T_b}{P_b}\right) E \left[4 \log_{10}\left(\frac{3.7\ D}{\varepsilon}\right) \right] \left[\frac{P_1^2 - P_2^2}{S\ L_m\ T_{avg}\ Z_{avg}} \right]^{0.5} d^{2.5} \qquad \textbf{Eq 17-18}$$

The partially turbulent flow equation is based on the smooth-pipe law[4] and is modified to account for drag-inducing elements. The transmission factor for this equation is:

$$\sqrt{1/f_f} = 4 \log_{10} \frac{R_e}{\sqrt{1/f_f}} - 0.6 \qquad \textbf{Eq 17-19}$$

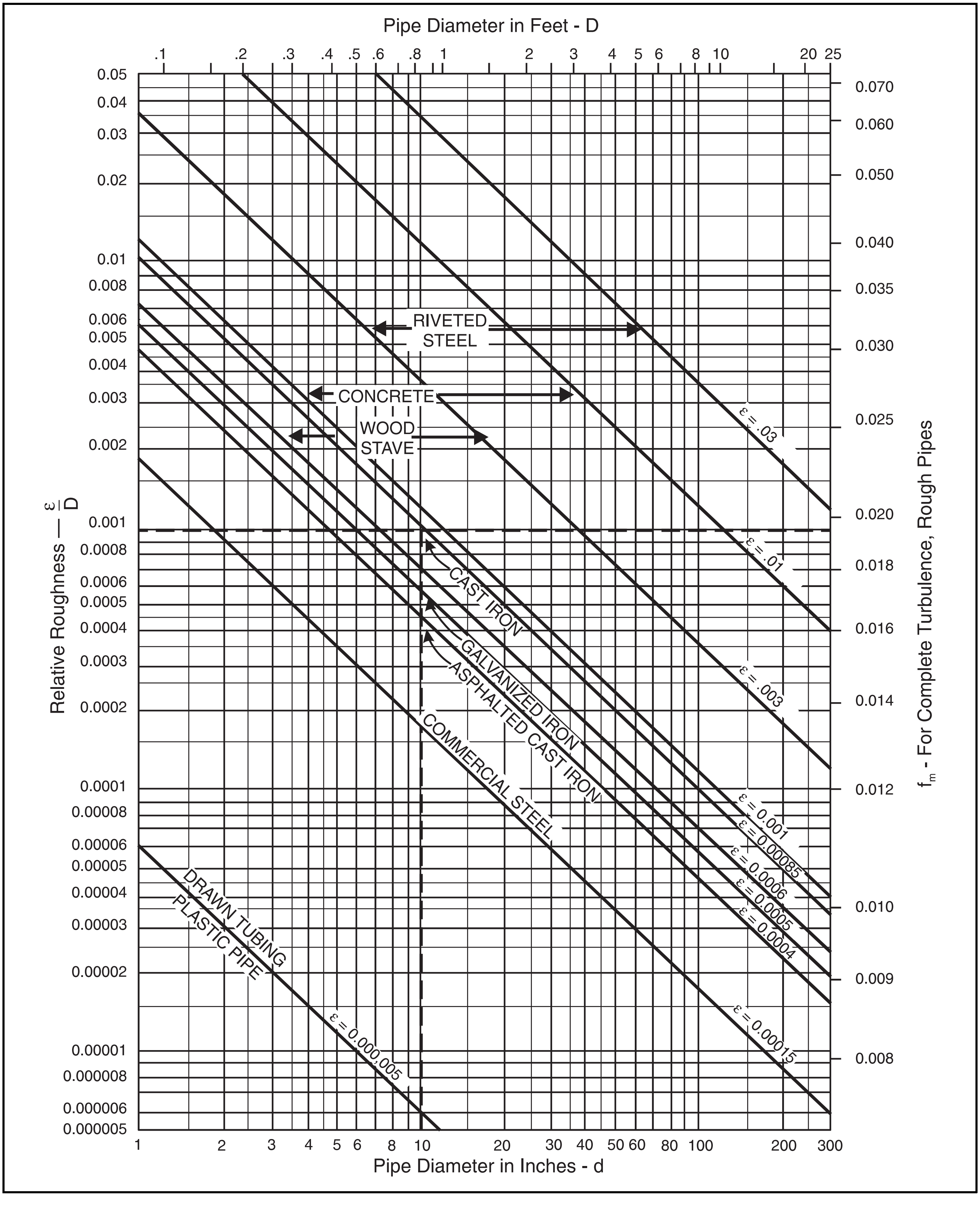

FIG. 17-3

Relative Roughness of Pipe Materials and Friction Factors for Complete Turbulence[5]

FIG. 17-4

Equivalent Length of Valves and Fittings in Feet

Nominal Pipe size in.	Globe valve or ball check valve	Angle valve	Swing check valve	Plug cock	Gate or ball valve	45° ell		Short rad. ell		Long rad. ell		Hard T		Soft T		90° miter bends			Enlargement					Contraction				
						Welded	Threaded	Welded	Threaded	Welded	Threaded	Welded	Threaded	Welded	Threaded	2 miter	3 miter	4 miter	Sudden			Std. red.		Sudden			Std. red.	
																			Equiv. L in terms of small d									
																			d/D = 1/4	d/D = 1/2	d/D = 3/4	d/D = 1/2	d/D = 3/4	d/D = 1/4	d/D = 1/2	d/D = 3/4	d/D = 1/2	d/D = 3/4
1½	55	26	13	7	1	1	2	3	5	2	3	8	9	2	3				5	3	1	4	1	3	2	1	1	–
2	70	33	17	14	2	2	3	4	5	3	4	10	11	3	4				7	4	1	5	1	3	3	1	1	–
2½	80	40	20	11	2	2	–	5	–	3	–	12	–	3	–				8	5	2	6	2	4	3	2	2	–
3	100	50	25	17	2	2		6		4		14		4					10	6	2	8	2	5	4	2	2	–
4	130	65	32	30	3	3		7		5		19		5					12	8	3	10	3	6	5	3	3	–
6	200	100	48	70	4	4		11		8		28		8					18	12	4	14	4	9	7	4	4	1
8	260	125	64	120	6	6		15		9		37		9					25	16	5	19	5	12	9	5	5	2
10	330	160	80	170	7	7		18		12		47		12					31	20	7	24	7	15	12	6	6	2
12	400	190	95	170	9	9		22		14		55		14		28	21	20	37	24	8	28	8	18	14	7	7	2
14	450	210	105	80	10	10		26		16		62		16		32	24	22	42	26	9	–	–	20	16	8	–	–
16	500	240	120	145	11	11		29		18		72		18		38	27	24	47	30	10	–	–	24	18	9	–	–
18	550	280	140	160	12	12		33		20		82		20		42	30	28	53	35	11	–	–	26	20	10	–	–
20	650	300	155	210	14	14		36		23		90		23		46	33	32	60	38	13	–	–	30	23	11	–	–
22	688	335	170	225	15	15		40		25		100		25		52	36	34	65	42	14	–	–	32	25	12	–	–
24	750	370	185	254	16	16		44		27		110		27		56	39	36	70	46	15	–	–	35	27	13	–	–
30	–	–	–	312	21	21		55		40		140		40		70	51	44										
36	–	–	–		25	25		66		47		170		47		84	60	52										
42	–	–	–		30	30		77		55		200		55		98	69	64										
48	–	–	–		35	35		88		65		220		65		112	81	72										
54	–	–	–		40	40		99		70		250		70		126	90	80										
60	–	–	–		45	45		110		80		260		80		190	99	92										

Substituting $\sqrt{1/f_f}$ from Eq 17-19 into Eq 17-15 does not provide an equation which can be solved directly. For partially turbulent flow a frictional drag factor must also be applied to account for the effects of pipe bends and irregularities. These calculations are beyond the scope of this book and the AGA "Steady Flow in Gas Pipelines"[6] should be consulted for a detailed treatment of partially turbulent flow.

The Weymouth Equation — The Weymouth Equation, published in 1912[7], evaluated the coefficient of friction as a function of the diameter.

$$f_f = \frac{0.008}{d^{1/3}} \qquad \textbf{Eq 17-20}$$

$$\sqrt{1/f_f} = 11.18\, d^{1/6} \qquad \textbf{Eq 17-21}$$

When the friction factor, f_f, is substituted in the general energy equation, Weymouth's Equation becomes:

$$Q = (433.5)\left(\frac{T_b}{P_b}\right) E \left[\frac{P_1^2 - P_2^2}{S\, L_m\, T_{avg} Z_{avg}}\right]^{0.5} d^{2.667} \qquad \textbf{Eq 17-22}$$

The Weymouth formula for short pipelines and gathering systems agrees more closely with metered rates than those calculated by most other formulae. However, the degree of error increases with pressure. If the Q calculated from the Weymouth formula is multiplied by $\sqrt{1/Z}$, where Z is the compressibility factor of the gas, the corrected Q will closely approximate the metered flow. Fig. 17-5 shows a plot of the deviation factor, $\sqrt{1/Z}$, of a common gas and can be used safely if exact data is not available.

The equation cannot be generally applied to any variety of diameters and roughness, and in the flow region of partially developed turbulence, it is not valid. The Weymouth Equation may be used to approximate fully turbulent flow by applying correction factors determined from the system to which it is to be applied. Graphs showing gas flow calculations based on the Weymouth equation are shown in Fig. 17-6a and 17-6b.

Panhandle A Equation — In the early 1940s Panhandle Eastern Pipe Line Company developed a formula for calculation of gas flow in transmission lines which has become known as the Panhandle A Equation. This equation uses the following expressions of Reynolds number and transmission factor.

$$Re = 1.934\,\frac{QS}{d} \qquad \textbf{Eq 17-23}$$

$$\sqrt{1/f_f} = 7.211\left(\frac{QS}{d}\right)^{0.07305} = 6.872\,(Re)^{0.07305} \qquad \textbf{Eq 17-24}$$

The transmission factor assumes a Reynolds number value from 5 to 11 million based on actual metered experience.

Substituting Eq 17-24 for $\sqrt{1/f_f}$ in the general energy equation (Eq 17-15), the Panhandle A Equation becomes:

$$Q = 435.87\left(\frac{T_b}{P_b}\right)^{1.0788} E\left[\frac{P_1^2 - P_2^2}{S^{0.853}\, L_m\, T_{avg} Z_{avg}}\right]^{0.5392} d^{2.6182}$$

Eq 17-25

This equation was intended to reflect the flow of gas through smooth pipes. When "adjusted" with an efficiency factor, E, of about 0.90, the equation is a reasonable approximation of the partially turbulent flow equation. The equation becomes less accurate as flow rate increases. Many users of the Panhandle A Equation assume an efficiency factor of 0.92.

Panhandle B Equation — A new or revised Panhandle Equation was published in 1956. This revised equation is known as the Panhandle B Equation and is only slightly

FIG. 17-5

Deviation Factors[8]

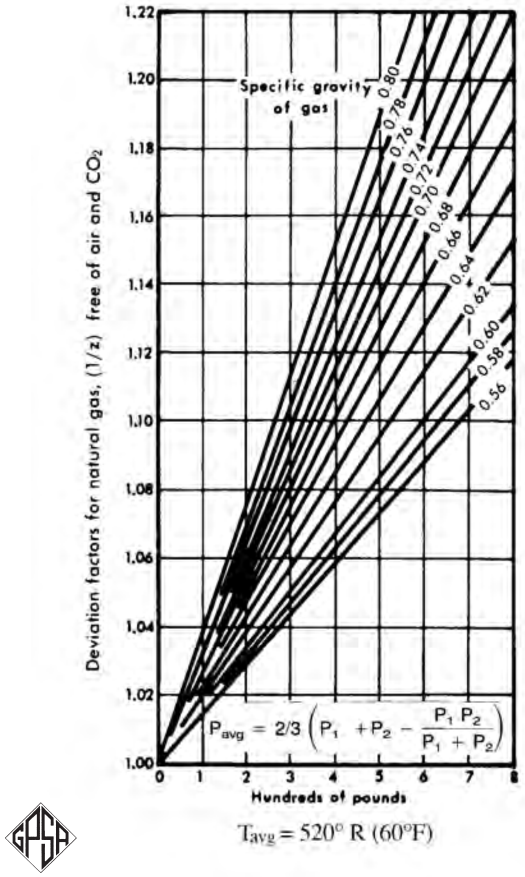

Note: Refer to Section 23 for more accurate compressibility factors.

Reynolds number dependent. Therefore, it more nearly approximates fully turbulent flow behavior. The transmission factor used here is:

$$\sqrt{1/f_f} = 16.70\left(\frac{QS}{d}\right)^{0.01961} = 16.49\,(Re)^{0.01961} \qquad \textbf{Eq 17-26}$$

Substituting Eq 17-23 for $\sqrt{1/f_f}$ in the general energy equation (Eq 17-15), the Panhandle B Equation becomes:

$$Q = 737\left(\frac{T_b}{P_b}\right)^{1.02} E\left[\frac{P_1^2 - P_2^2}{S^{0.961}\,L_m\,T_{avg}Z_{avg}}\right]^{0.51} d^{2.53} \qquad \textbf{Eq 17-27}$$

The equation can be adjusted through the use of an efficiency term that makes it applicable across a relatively limited range of Reynolds numbers. Other than this, however, there are no means for adjustment of the equation to correct it for variations in pipe surface. Adjusted to an average flowing Reynolds number, the equation will predict low flow rates at low Reynolds numbers, and high flow rates at high Reynolds numbers, as compared to a fully turbulent flow equation. Efficiencies based on the Panhandle B equation decrease with increasing flow rate for fully turbulent flow. The efficiency factor, E, used in the Panhandle B equation generally varies between about 0.88 and 0.94.

Conclusions — The successful application of these transmission line flow equations in the past has largely involved compensation for discrepancies through the use of adjustment factors, usually termed "efficiencies." These efficiencies are frequently found in practice by determining the constant required to cause predicted gas equation behavior to agree with flow data. As a result, the values of these factors are specific to particular gas flow equations and field conditions and, under many circumstances, vary with flow rate in a fashion that obscures the real nature of flow behavior in the pipe.

The Reynolds number dependent equations, such as the Panhandle equations, utilize a friction factor expression which yields an approximation to partially turbulent flow behavior in the case of the Panhandle A equation, and an approximation to fully turbulent behavior in the case of the Panhandle B.

These equations suffer from the substitution of a fixed gas viscosity value into the Reynolds number expression, which, in turn, substituted into the flow equation, results in an expression with a preconditioned bias.

Regardless of the merits of various gas flow equations, past practices may dictate the use of a particular equation to maintain continuity of comparative capacities through application of consistent operating policy. A summary of comparisons between transmission factors used in the above gas equations are shown in Fig. 17-7.

Reference should be made to "Steady Flow in Gas Pipelines"[6], published by American Gas Association, for a complete analysis of steady flow in gas pipelines.

Low Pressure Gas Flow

Gas gathering often involves operating pressures below 100 psi. Some systems flow under vacuum conditions. For these low pressure conditions, equations have been developed that give a better fit than the Weymouth or Panhandle equations. Two such formulas are:

The Oliphant Formula[9] for gas flow between vacuum and 100 psi:

$$Q = 42\,(24)\left(d^{2.5} + \frac{d^3}{30}\right)\left(\frac{14.4}{P_b}\right)\left(\frac{T_b}{520}\right)$$

$$\left[\left(\frac{0.6}{S}\right)\left(\frac{520}{T}\right)\left(\frac{P_1^2 - P_2^2}{L_m}\right)\right]^{1/2} \qquad \textbf{Eq 17-28}$$

The Spitzglass Formula for gas flow below 1 psig at 60°F:

$$Q = (24)\,(3550)\left[\frac{27.69\,(P_1 - P_2)\,d^5}{SL\left(1 + \frac{3.6}{d} + 0.03\,d\right)}\right]^{1/2} \qquad \textbf{Eq 17-29}$$

Plant Piping Gas Flow

For estimating pressure drop in short runs of gas piping, such as within plant or battery limits, a simplified formula for compressible fluids is accurate for fully turbulent flow, assuming the pressure drop through the line is not a significant fraction of the total pressure (i.e. no more than 10%).

The following method is a simplification of the Darcy formula, which eliminates calculation of f_m, the Moody friction factor. This simplification was checked over a wide range of flows and densities for pressure drops of 0.25 to 1.5 psi/100 ft. Density was varied over a range of 100 to 1; flows varied over a range of 75 to 1. Pressure variation was from atmospheric to 1000 psia. The error from using the simplified approach as compared to the actual friction factor calculated in the Darcy formula was from zero to 5%, with the simplified approach

FIG. 17-6a

Gas Flow Based On Weymouth Formula

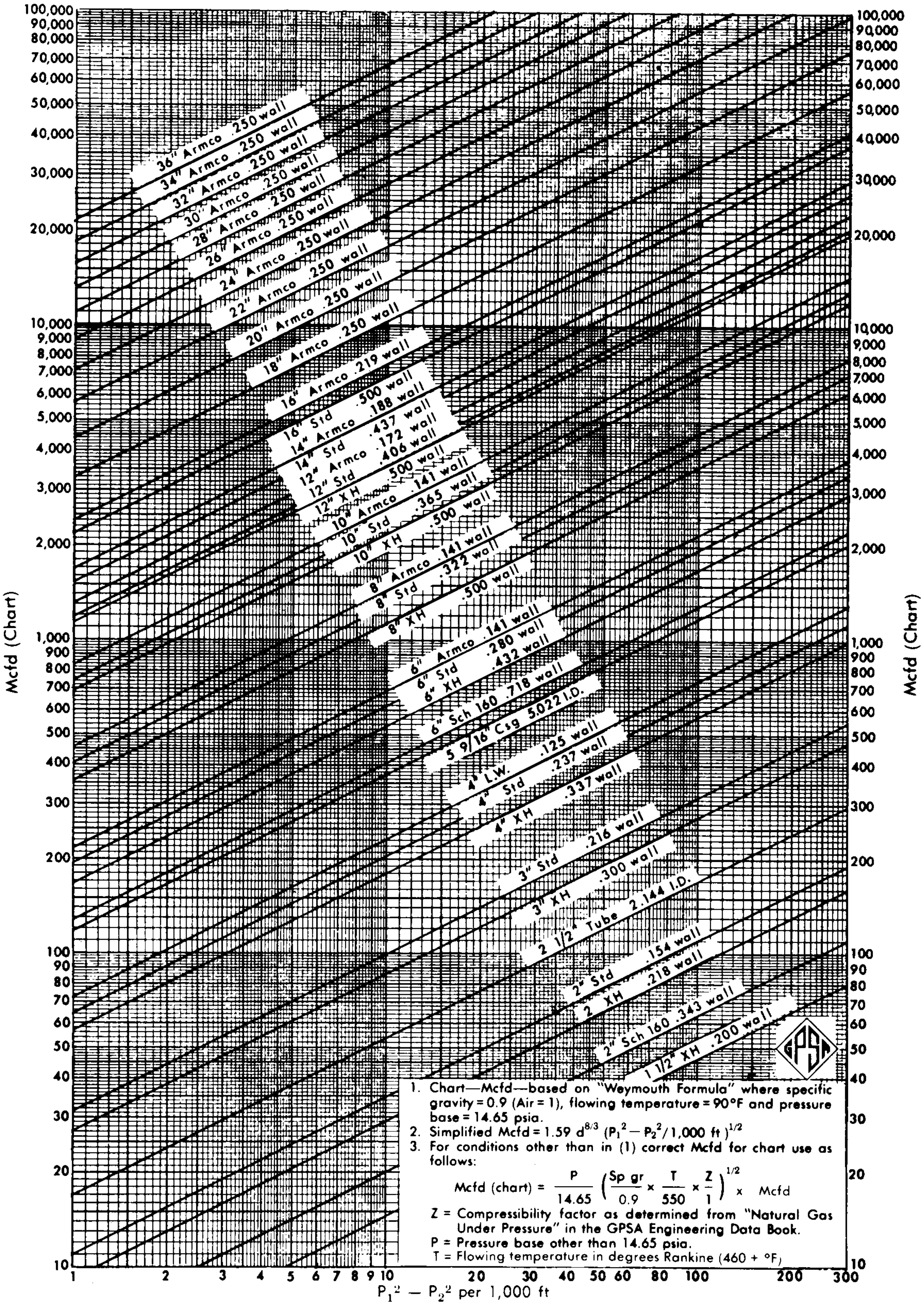

1. Chart—Mcfd—based on "Weymouth Formula" where specific gravity = 0.9 (Air = 1), flowing temperature = 90°F and pressure base = 14.65 psia.
2. Simplified Mcfd = $1.59\ d^{8/3}\ (P_1^2 - P_2^2/1{,}000\ \text{ft})^{1/2}$
3. For conditions other than in (1) correct Mcfd for chart use as follows:

$$\text{Mcfd (chart)} = \frac{P}{14.65}\left(\frac{\text{Sp gr}}{0.9} \times \frac{T}{550} \times \frac{Z}{1}\right)^{1/2} \times \text{Mcfd}$$

Z = Compressibility factor as determined from "Natural Gas Under Pressure" in the GPSA Engineering Data Book.

P = Pressure base other than 14.65 psia.

T = Flowing temperature in degrees Rankine (460 + °F)

FIG. 17-6b

Gas Flow Based On Weymouth Formula

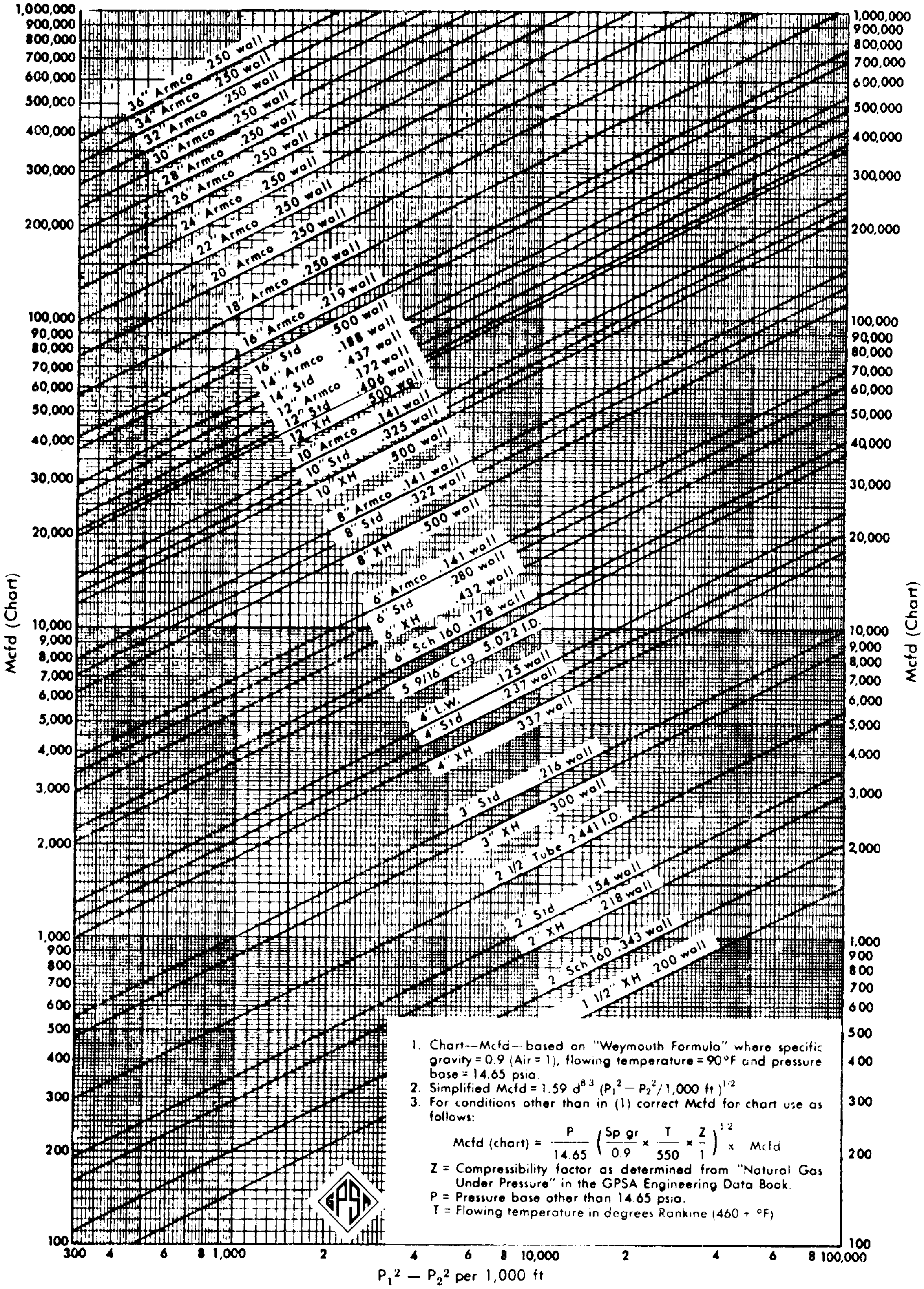

1. Chart—Mcfd—based on "Weymouth Formula" where specific gravity = 0.9 (Air = 1), flowing temperature = 90°F and pressure base = 14.65 psia.
2. Simplified $\text{Mcfd} = 1.59\, d^{8/3} \left(P_1^2 - P_2^2/1{,}000 \text{ ft}\right)^{1/2}$
3. For conditions other than in (1) correct Mcfd for chart use as follows:

$$\text{Mcfd (chart)} = \frac{P}{14.65}\left(\frac{\text{Sp gr}}{0.9} \times \frac{T}{550} \times \frac{Z}{1}\right)^{1/2} \times \text{Mcfd}$$

Z = Compressibility factor as determined from "Natural Gas Under Pressure" in the GPSA Engineering Data Book.

P = Pressure base other than 14.65 psia.

T = Flowing temperature in degrees Rankine (460 + °F)

FIG. 17-7

Comparison of Gas Equation Transmission Factors for Nominal 20 Inch Pipe

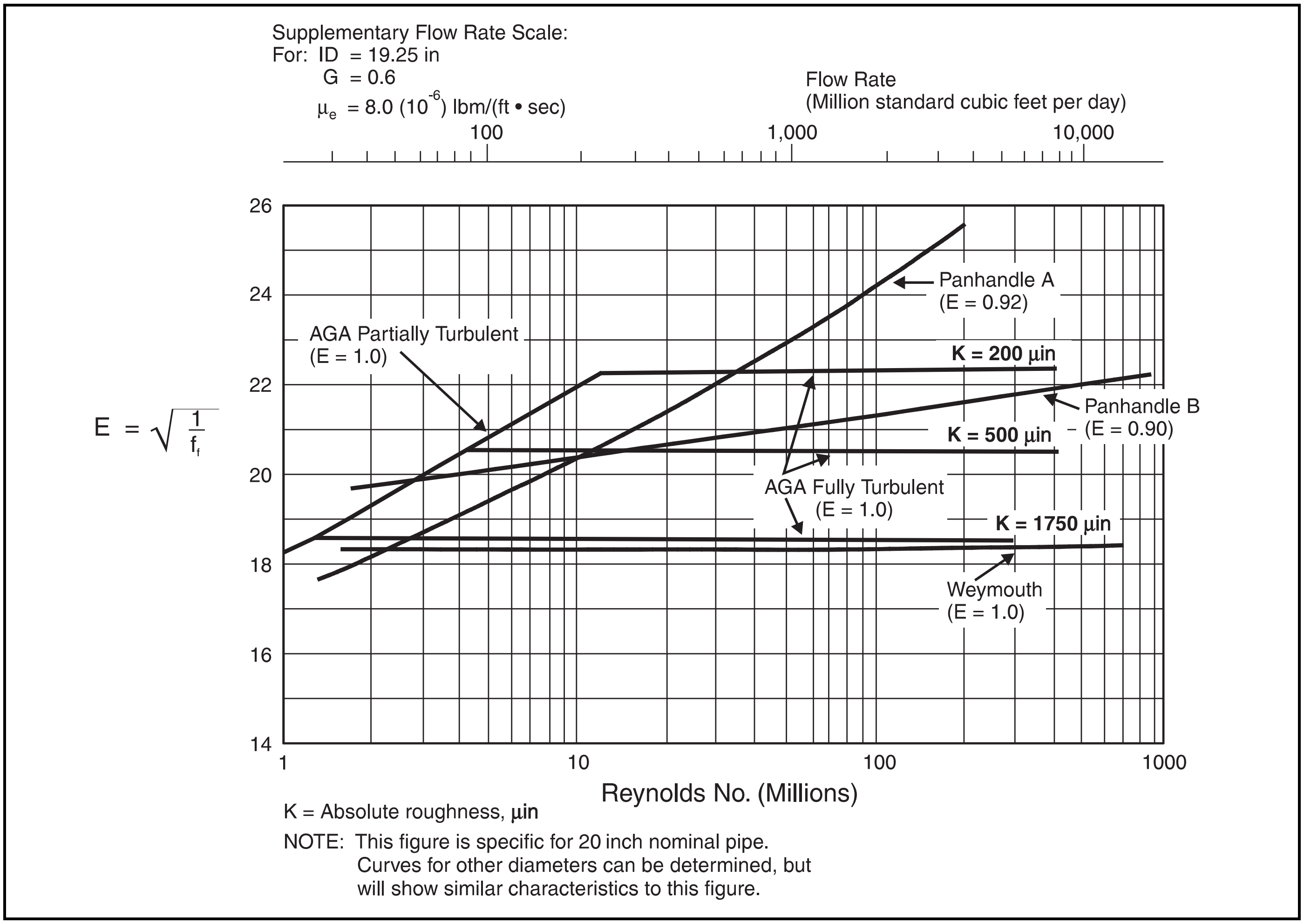

K = Absolute roughness, µin

NOTE: This figure is specific for 20 inch nominal pipe. Curves for other diameters can be determined, but will show similar characteristics to this figure.

giving consistently lower calculated pressure drop for a given flow.

The Darcy formula can be written in the simple form:

$$\Delta P_{100} = \frac{W^2}{\rho}\left(\frac{0.000336\ f_m}{d^5}\right) \qquad \textbf{Eq 17-30}$$

Simplifying, $C_1 = W^2 (10^{-9})$, and $C_2 = \frac{336{,}000\ f_m}{d^5}$, then

$$\Delta P_{100} = \frac{C_1\ C_2}{\rho} \qquad \textbf{Eq 17-31}$$

$$C_1 = \frac{(\Delta P_{100})\ \rho}{C_2} = \text{discharge factor from chart, Fig. 17-8}$$

$$C_2 = \frac{(\Delta P_{100})\ \rho}{C_1} = \text{size factor Fig. 17-9}$$

C_2 incorporates the friction factor, assuming clean steel. Using this simplified approach, new lines can be sized by setting the desired ΔP_{100} and solving for C_2 with a given flow. For a given flow and pipe size, ΔP_{100} can be solved directly.

Example 17-1 — Calculate the pressure drop in a 10-in., Schedule 40 pipe for a flow of 150,000 lb/hr of methane. Temperature is 60°F and pressure is 750 psia. The compressibility factor is 0.905 (from Fig. 23-4).

Solution Steps

$$\rho = \frac{16.042\ (750)}{10.73\ (460 + 60)\ (0.905)} = 2.38\ \text{lb}/\text{ft}^3$$

C_1 from Fig. 17-8 is 22.5

C_2 from Fig. 17-9 is 0.0447

$$\Delta P_{100} = \frac{C_1 C_2}{\rho} = \frac{22.5\ (0.0447)}{2.38}$$

$$= 0.423\ \text{psi/100 ft using Eq 17–31}$$

Example 17-2 — Calculate the required line size (of Schedule 40 pipe) to give ΔP_{100} = 1 psi or less when flowing 75,000 lb/hr of methane at 400 psia and 100°F. The compressibility factor is 0.96 (from Fig. 23-6).

Solution Steps

$$\rho = \frac{16.062\ (400)}{10.73\ (460 + 100)\ (0.96)} = 1.11\ \text{lb/ft}^3$$

C_1 from Fig. 17-8 is 5.6

$$C_2 = \frac{(\Delta P_{100})\ \rho}{C_1} = \frac{1\ (1.11)}{5.6} = 0.20$$

FIG. 17-8

Simplified Flow Formula for Compressible Fluids[5]

Values of C_1

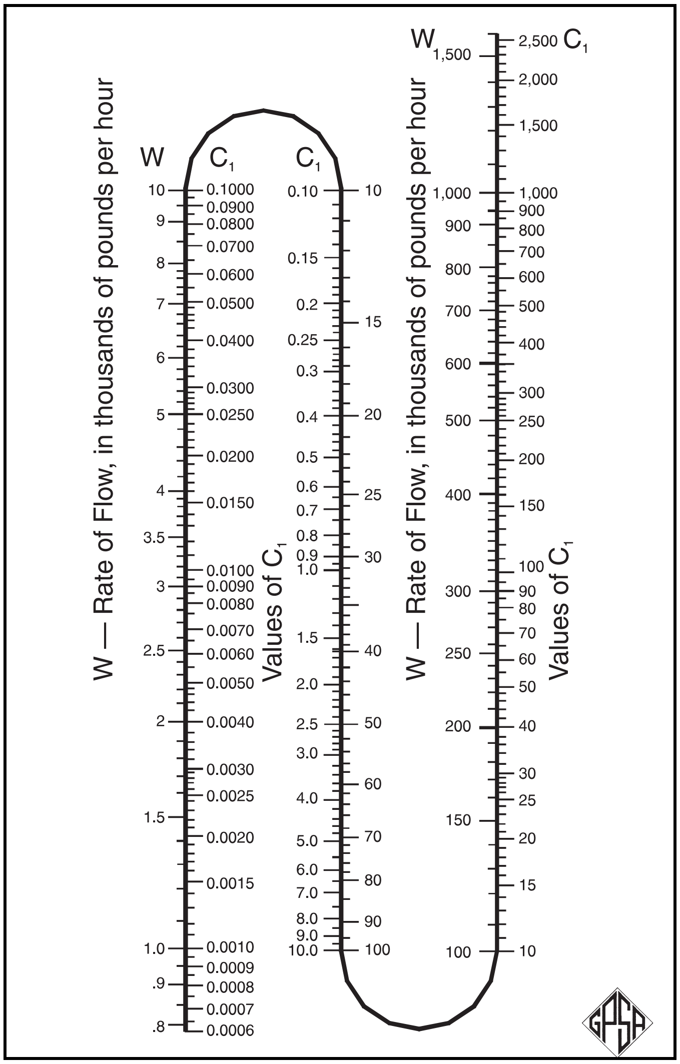

From Fig. 17-9 the smallest size of Schedule 40 pipe with C_2 less than 0.20 is 8-in. pipe. For 8 in. Sch 40 pipe, C_2 is 0.146. The actual pressure drop can then be calculated as:

$$\Delta P_{100} = \frac{5.6\,(0.146)}{1.11} = 0.74 \text{ psi/100 ft}$$

using Eq 17-31 for the above flow conditions.

Liquid Flow

For the calculation of pressure drop in liquid lines, the Darcy-Weisbach method, Eq 17-6, can be used. The calculation is simplified for liquid flows since the density can reasonably be assumed to be a constant. As a result, the Darcy-Weisbach calculation can be applied to a long run of pipe, rather than segmentally as dictated by the variable density in gas flow. In addition, several graphical aids are available for pressure drop calculation. Elevation pressure drops must be calculated separately using Eq 17-32. These elevation pressure gains or losses are added algebraically to the frictional pressure drops.

$$\Delta P_e = (0.00694)\,\rho_L\, Z_e \qquad \textbf{Eq 17-32}$$

Water — A graph showing pressure drop for water per 100 feet as a function of flow rate in gallons per minute and pipe size is shown in Fig. 17-10. These data are based on the Hazen and Williams empirical formula[10] using a "C" constant of 100 which is commonly used for design purposes in welded and seamless steel pipe.

Hazen and Williams formula for flow of water:

$$q = 0.442\, d^{2.63}\, C \left(\frac{P_1 - P_2}{L}\right)^{0.54} \qquad \textbf{Eq 17-33}$$

Where:

C = 140 for new steel pipe

C = 130 for new cast iron pipe

C = 100 is often used for design purposes to account for pipe fouling, etc.

Hydrocarbon — A graph showing pressure drop for hydrocarbons per 100 feet as a function of flow rate in gallons per minute and pipe size is shown in Fig. 17-11. This graph assumes a specific gravity of 1.0 (water). To correct for different liquid densities, the value read from Fig. 17-11 must be multiplied by the actual specific gravity to obtain the correct pressure loss.

Steam Flow

Fig. 17-12 contains a graphical representation of Fritzsche's formula[11] for calculating pressure drop in steam lines. Fritzsche's formula and instructions for the chart usage are given in Fig. 17-12.

The Babcock formula[5] for steam flow is:

$$\Delta P_f = 3.63\,(10^{-8}) \left(\frac{d + 3.6}{d^6}\right) \frac{W^2\, L}{\rho} \qquad \textbf{Eq 17-34}$$

Fire Stream Flow

Fig. 17-13 is a table permitting rapid computation of the behavior of various sized fire nozzles. The table also includes the estimated pressure drop in 100 feet of 2½ inch diameter fire hose.

TWO PHASE FLOW

Two-phase flow presents several design and operational difficulties not present in single phase liquid or vapor flow. Frictional pressure drops are much harder to calculate. For cross-country pipelines, a terrain profile is needed to calculate elevation pressure drops. Commercial software is available to simulate these complex two-phase flow situations.

At the downstream end of a pipeline, it is frequently necessary to separate the liquid and vapor phases in a separator. The presence of liquid slugs complicates this process, and a slug catcher may be required.

Flow Regime Determination

Several empirical flow regime maps have been presented that determine vapor-liquid flow patterns as a function of fluid properties and flow rates. Diagrams of these flow patterns are shown in Fig. 17-14. One map commonly used was developed by Gregory, Aziz, and Mandhane[12] for horizontal flow. This map appears as Fig. 17-15. The coordinates of the map are:

$$V_{sL} = \text{superficial liquid velocity}$$

$$= Q_L/A \qquad \textbf{Eq 17-35}$$

FIG. 17-9

Simplified Flow Formula for Compressible Fluids[5]
Values of C_2

Nominal pipe size in.	Schedule number	Value of C_2
⅛	40 s	7 920 000.
	80 x	26 200 000.
¼	40 s	1 590 000.
	80 x	4 290 000.
⅜	40 s	319 000.
	80 x	718 000.
½	40 s	93 500.
	80 x	186 100.
	160	430 000.
	... xx	11 180 000.
¾	40 s	21 200.
	80 x	36 900.
	160	100 100.
	... xx	627 000.
1	40 s	5 950.
	80 x	9 640.
	160	22 500.
	... xx	114 100.
1¼	40 s	1 408.
	80 x	2 110.
	160	3 490
	... xx	13 640.
1½	40 s	627.
	80 x	904.
	160	1 656.
	... xx	4 630.
2	40 s	169.
	80 x	236.
	160	488.
	... xx	899.
2½	40 s	66.7
	80 x	91.8
	160	146.3
	... xx	380.0
3	40 s	21.4
	80 x	28.7
	160	48.3
	... xx	96.6
3½	40 s	10.0
	80 x	13.2
4	40 s	5.17
	80 x	6.75
	120	8.94
	160	11.80
	... xx	18.59
5	40 s	1.59
	80 x	2.04
	120	2.69
	160	3.59
	... xx	4.93
6	40 s	0.610
	80 x	0.798
	120	1.015
	160	1.376
	... xx	1.861
8	20	0.133
	30	0.135
	40 s	0.146
	60	0.163
	80 x	0.185
	100	0.211
	120	0.252
	140	0.289
	... xx	0.317
	160	0.333
10	20	0.039 7
	30	0.042 1
	40 s	0.044 7
	60 x	0.051 4
	80	0.056 9
	100	0.066 1
	120	0.075 3
	140	0.090 5
	160	0.105 2
12	20	0.015 7
	30	0.016 8
	... s	0.017 5
	40	0.018 0
	... x	0.019 5
	60	0.020 6
	80	0.023 1
	100	0.026 7
	120	0.031 0
	140	0.035 0
	160	0.042 3
14	10	0.009 49
	20	0.009 96
	30 s	0.010 46
	40	0.010 99
	... x	0.011 55
	60	0.012 44
	80	0.014 16
	100	0.016 57
	120	0.018 98
	140	0.021 8
	160	0.025 2
16	10	0.004 63
	20	0.004 83
	30 s	0.005 04
	40 x	0.005 49
	60	0.006 12
	80	0.007 00
	100	0.008 04
	120	0.009 26
	140	0.010 99
	160	0.012 44
18	10	0.002 47
	20	0.002 56
	... s	0.002 66
	30	0.002 76
	... x	0.002 87
	40	0.002 98
	60	0.003 35
	80	0.003 76
	100	0.004 35
	120	0.005 04
	140	0.005 73
	160	0.006 69
20	10	0.001 41
	20 s	0.001 50
	30 x	0.001 61
	40	0.001 69
	60	0.001 91
	80	0.002 17
	100	0.002 51
	120	0.002 87
	140	0.003 35
	160	0.003 85
24	10	0.000 534
	20 s	0.000 565
	... x	0.000 597
	30	0.000 614
	40	0.000 651
	60	0.000 741
	80	0.000 835
	100	0.000 972
	120	0.001 119
	140	0.001 274
	160	0.001 478
30	10	0.0001681
	... s	0.0001719
	20 xs	0.0001797
	30	0.0001879
36	10	0.0000642
	... s	0.0000654
	20 xs	0.0000678
	30	0.0000704
	40	0.0000731

Note: The letters s, x, and xx in the columns of Schedule Numbers indicate Standard, Extra Strong, and Double Extra Strong pipe respectively.

FIG. 17-10

Pressure Drop for Flowing Water

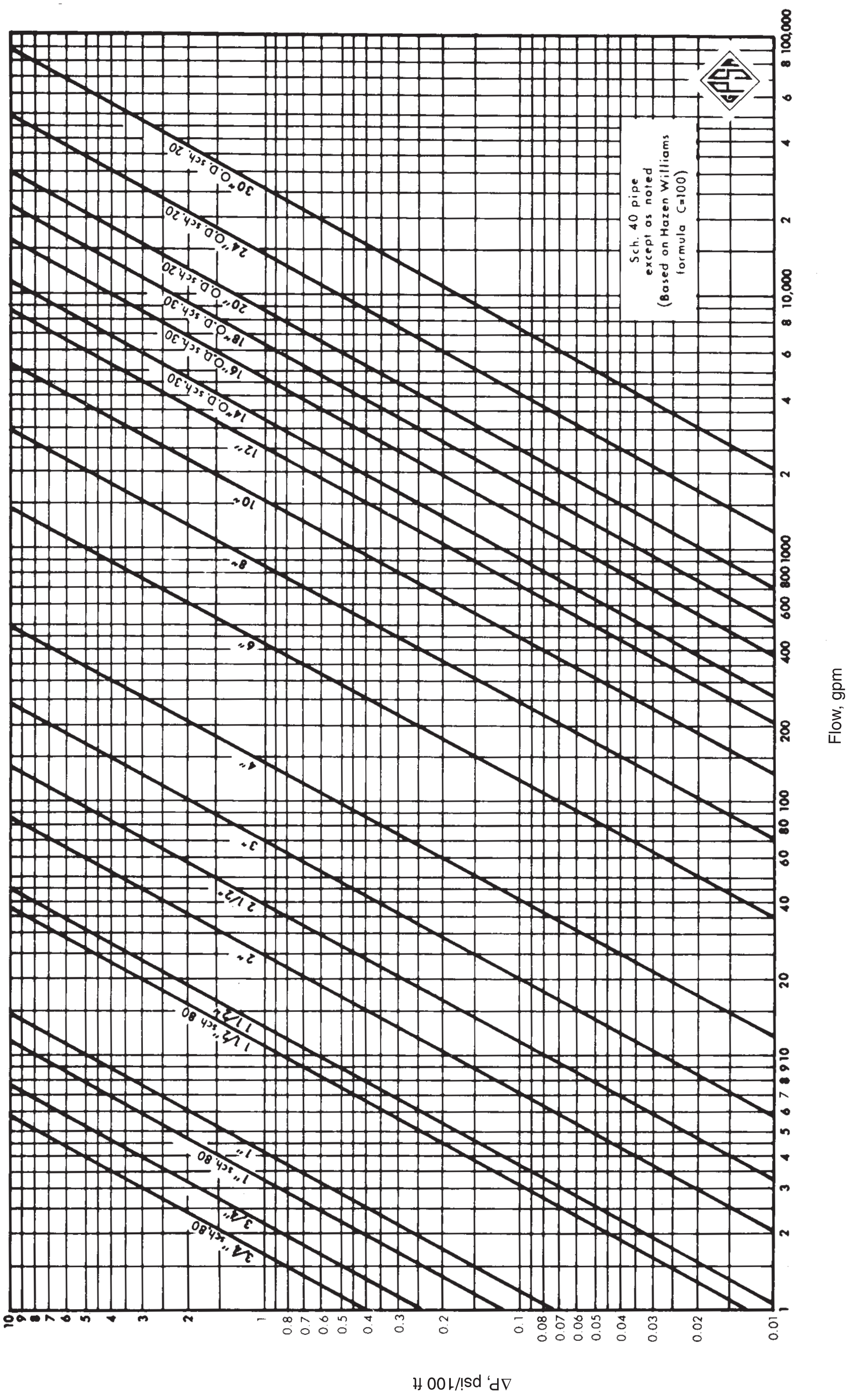

FIG. 17-11

Pressure Drop for Hydrocarbon Liquids in Smooth Pipe

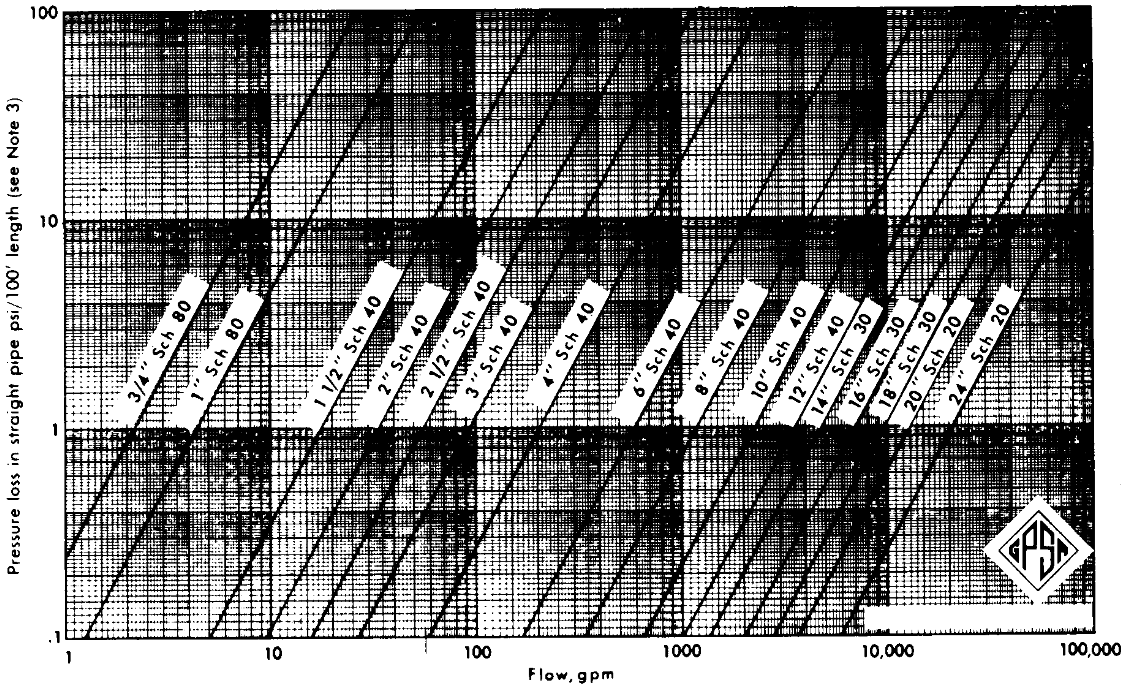

Notes:

1. Curves calculated using the Fanning equation:

$$\Delta P_{100} = \frac{5.35\, f_f\, q^2\, \rho_L}{d^5\, \rho_W}$$

2. For this chart ϵ = 0.00015 ft
3. This chart assumes specific gravity = 1.0. For other values multiply pressure loss from chart by actual specific gravity (ρ_L/ρ_W).
4. For viscous fluids, use this chart only if the flow is fully turbulent (see Fig. 17-2). For viscous fluids in the partially turbulent range, use Fig. 17-2 to obtain f_m and use Eq. 17-7 to calculate ΔP_f.

V_{sg} = superficial gas velocity

$$= Q_g/A \qquad \textbf{Eq 17-36}$$

Mandhane proposed a fluid property correction to the superficial velocities, but concluded that the fluid property effects are insignificant compared to the errors in the empirical map. The map reports the flow regimes: stratified, wavy, annular mist, bubble, slug, and dispersed. Care should be taken in the interpretation of these flow maps as the regime boundaries are strongly affected by pipe inclination. In particular, horizontal flow regime maps must not be used for vertical flow, and vertical flow regime maps must not be used for horizontal flow. The Mandhane map given in Fig. 17-15 was developed for horizontal lines flowing air and water at near atmospheric pressure. Inclinations in the range of 0.1-1.0 degrees can cause substantial regime boundary movement. In addition, flow regime boundary adjustment has been observed due to fluid pressure, pipe diameter, and surface tension.[13,22] The gas density increase caused by high pressure acts to move the slug-mist boundary to lower superficial gas velocities, while increased pipe diameter acts to increase the stratified wavy flow regime at the expense of the slug flow regime. In addition, foamy fluids having a high surface tension have been observed to flow in the dispersed flow regime even though Mandhane would have predicted superficial liquid velocities too low to cause dispersed flow. A flow regime map generated by Taitel and Dukler[13] contains explicit inclination effects and should be used for inclined pipes. This latter method also contains explicit pipe diameter effects but lacks any way of accounting for surface tension.

For vertical flow, the stratified flow regime cannot exist as there is no preferred direction for the liquid to settle. An empirical flow regime map developed by Aziz[14] for vertical upward flow is shown in Fig. 17-16. The coordinates for this flow map are the same as for the Mandhane map in Fig. 17-15 except that fluid property corrections are used. The coordinates used in the Aziz vertical map are:

$$N_x = V_{sg}\, X_A \qquad \textbf{Eq 17-37}$$

$$N_y = V_{sL}\, Y_A \qquad \textbf{Eq 17-38}$$

$$X_A = \left(\frac{\rho_g}{\rho_a}\right)^{0.333} Y_A \qquad \textbf{Eq 17-39}$$

$$Y_A = \left(\frac{\rho_L \sigma_{wa}}{\rho_w \sigma}\right)^{0.25} \qquad \textbf{Eq 17-40}$$

For pipe inclinations greater than 10-20 degrees, flow regime patterns resemble those of vertical flow more than those

FIG. 17-12

Pressure Drop in Steam Pipes by Fritzsche's Formula[11]

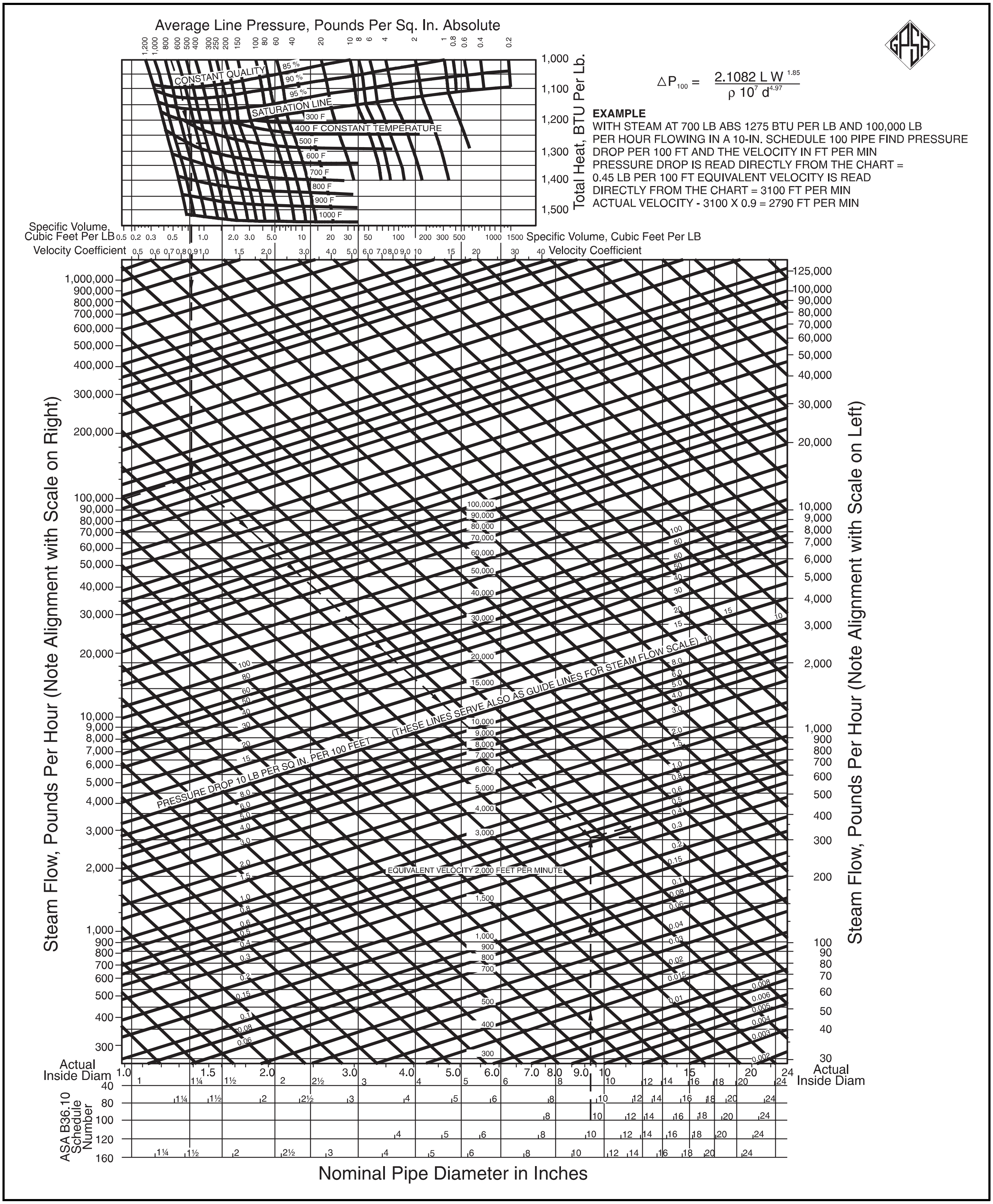

$$\triangle P_{100} = \frac{2.1082\ L\ W^{1.85}}{\rho\ 10^{7}\ d^{4.97}}$$

EXAMPLE

WITH STEAM AT 700 LB ABS 1275 BTU PER LB AND 100,000 LB PER HOUR FLOWING IN A 10-IN. SCHEDULE 100 PIPE FIND PRESSURE DROP PER 100 FT AND THE VELOCITY IN FT PER MIN

PRESSURE DROP IS READ DIRECTLY FROM THE CHART = 0.45 LB PER 100 FT EQUIVALENT VELOCITY IS READ DIRECTLY FROM THE CHART = 3100 FT PER MIN

ACTUAL VELOCITY - 3100 X 0.9 = 2790 FT PER MIN

FIG. 17-13

Table of Effective Fire Streams

Smooth nozzles, size	¾"						⅞"						1"					
Pressure at hydrants, psi.	32	43	54	65	75	85	34	46	57	69	80	91	37	50	62	75	87	100
Pressure at nozzle, psi	30	40	50	60	70	80	30	40	50	60	70	80	30	40	50	60	70	80
Pres. lost in 100 ft. 2½ in. hose psi	2	3	4	5	5	6	4	6	7	9	10	11	7	10	12	15	17	20
Vertical height, ft.	48	60	67	72	76	79	49	62	71	77	81	85	51	64	73	79	85	89
Horizontal distance, ft	37	44	50	54	58	60	42	49	55	61	66	70	47	55	61	67	72	76
Gal discharge/ min.	90	104	116	127	137	147	123	142	159	174	188	201	161	186	208	228	246	263
Smooth nozzles, size	1⅛"						1¼"						1⅜"					
Pressure at hydrants, psi	42	56	70	84	98	112	49	65	81	97	113	129	58	77	95	116	135	154
Pressure at nozzle, psi	30	40	50	60	70	80	30	40	50	60	70	80	30	40	50	60	70	80
Pres. lost in 100 ft 2½ in hose psi	12	16	20	24	28	30	19	25	31	37	43	49	28	37	36	56	65	74
Vertical height, ft	52	65	75	83	88	92	53	67	77	85	91	95	55	69	79	87	92	97
Horizontal distance, ft	50	59	66	72	77	81	54	63	70	76	81	85	56	66	73	79	84	88
Gal discharge/min	206	238	266	291	314	336	256	296	331	363	392	419	315	363	406	445	480	514

Using 100 ft of 2½ in. ordinary best quality rubber lined hose between nozzle and hydrant or pump.

The vertical and horizontal distance in above table are "effective" streams. The "effective stream" is one that has not broken up into a spray and which will project three fourths of the water through a circle 10 in. in diameter, at the distance indicated.

The bulk of the stream and extreme drops will carry a greater distance, but the stream is spread out too much to penetrate a hot fire and reach the burning materials before evaporation. The vertical height "h" in feet, which the bulk of the stream will carry, may be computed by formula $h = 0.91 \frac{V^2}{2g}$

The gallons/minute discharge in the above table check approximately with the formula: $V = C\sqrt{2\,gH} = \frac{0.321 \times gpm}{A}$

then $gpm = \frac{V\,A}{0.321}$

V = Velocity in feet per second

g = Acceleration due to gravity, = 32.16 ft/sec^2

A = Area of nozzle, in square inches

C = Coefficient for smooth nozzles = 0.98

H = Head in feet = pressure x 2.31

Reference: Fire Protection Handbook, 14th Edition, 1976, National Fire Protection Association

FIG. 17-14

Two Phase Flow Regimes

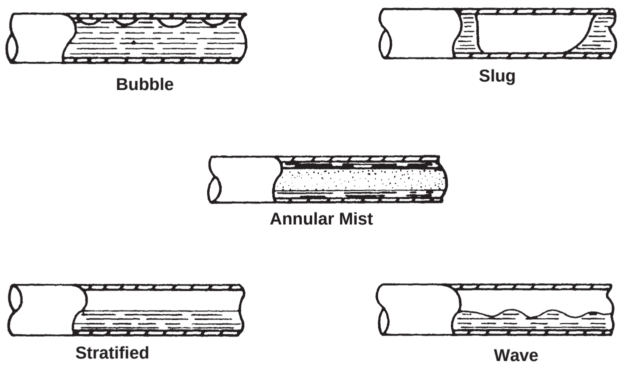

FIG. 17-15

Mandhane et al. Horizontal Flow Regime Map[12]

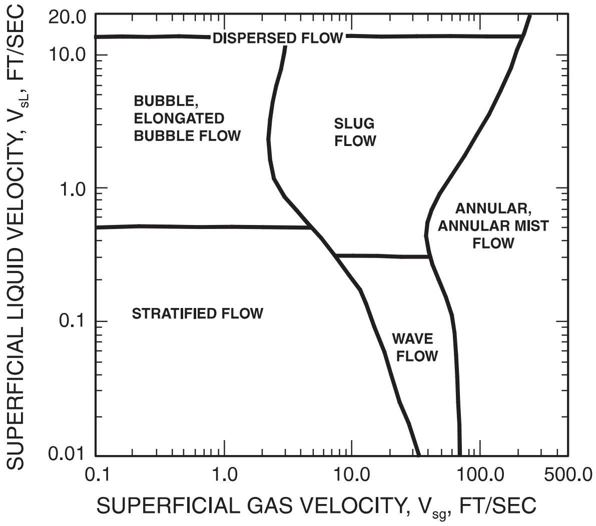

Courtesy Int. Journal Multiphase Flow

FIG. 17-16

Aziz et al. Vertical Up-Flow Regime Map[14]

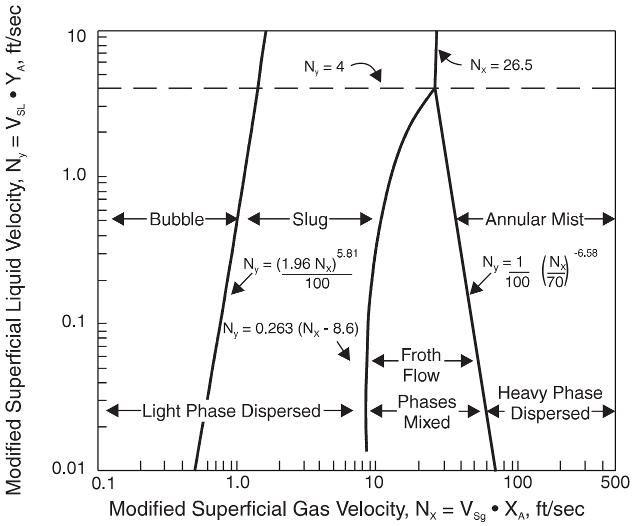

Courtesy The Journal of Canadian Petroleum

of horizontal flow, and the Aziz vertical map should be used. For vertical downward flow, the flow patterns can be more complicated. A generally accepted vertical down-flow map is not available.

Although the designer frequently does not have the choice, avoidance of the slug flow regime in horizontal flow and the slug and froth flow regimes in vertical flow is desirable. Slug flow introduces a flow rate and pressure intermittency that may be troublesome to process control. In some cases, slug flow may be avoided by the choice of smaller pipe sizes. Of course, frictional pressure drop may be increased by use of this smaller pipe. In vertical upflow, oversizing the pipe may result in a bubble flow regime, and a large liquid inventory. This liquid inventory may cause excessive hydrostatic presure drops.

Example 17-3 — A vapor-liquid mixture is flowing vertically upward in a pipe having an inside diameter of 8.0 inches. The fluid is a hydrocarbon liquid-hydrocarbon vapor mixture. The liquid density is 52 lb/ft^3 and the vapor density is 2.0 lb/ft^3. The interfacial surface tension is 20 dynes/cm. The liquid volumetric flow rate is 0.17 ft^3/sec and the vapor flow rate is 0.5 ft^3/sec measured at acutal conditions. What flow regime is to be expected?

Solution Steps

$$Y_A = \left[\frac{(52.0)\,(72.4)}{62.4\,(20)}\right]^{0.25} = 1.32 \qquad \text{using Eq 17-40}$$

$$X_A = \left[\frac{(2.0)}{0.0764}\right]^{0.333}(1.32) = 3.91 \qquad \text{using Eq 17-39}$$

$$V_{sg} = \frac{0.5}{(\pi/4)\,(8/12)^2} = 1.43\text{ ft/sec} \qquad \text{using Eq 17-36}$$

$$V_{sL} = \frac{0.17}{(\pi/4)\,(8/12)^2} = 0.49\text{ ft/sec} \qquad \text{using Eq 17-35}$$

$$N_x = (1.43)\,(3.91) = 5.60\text{ ft/sec} \qquad \text{using Eq 17-37}$$

$$N_y = (0.49)\,(1.32) = 0.64\text{ ft/sec} \qquad \text{using Eq 17-38}$$

Fig. 17-16 shows that this flow is in the slug flow regime.

Pressure Drop Calculation

Calculation of pressure drop in two-phase flow lends itself better to computer calculation than to hand calculation. Several two-phase pressure drop correlations are available for both horizontal and vertical flows.[15,16,17] Due to the complexity of two-phase flow, uncertainties associated with pressure drop calculations are much greater than uncertainties in single-phase pressure drop calculations. As a result, errors in calculated two-phase pressure drops in the order of plus or minus twenty percent may normally be anticipated, especially in circumstances where fluid velocities are unusually high or low, where terrain is rugged, or where fluid properties are inadequately known. In addition, different two-phase flow correlations may give significantly different pressure drops. In order to evaluate these differences, several correlations should be used. A method suggested by the American Gas Association[18] can serve as a basis for hand calculation generated by Dukler[19] and an elevation pressure drop correlation by Flanigan.[20]

Frictional Component[18] — Using the Dukler frictional pressure drop calculation method, the frictional pressure drop is given by the equation:

$$\Delta P_f = \frac{f_n\, f_{tpr}\, \rho_k\, V_m^2\, L_m}{(0.14623)d} \qquad \textbf{Eq 17-41}$$

where

$$\rho_k = \frac{\rho_L\, \lambda^2}{H_{Ld}} + \frac{\rho_g\,(1-\lambda)^2}{(1 - H_{Ld})} \qquad \textbf{Eq 17-42}$$

and

$$\lambda = \frac{Q_L}{Q_L + Q_g} \qquad \textbf{Eq 17-43}$$

The single phase friction factor, f_n, can be obtained from the correlation:[19]

$$f_n = 0.0056 + 0.5\,(Re_y)^{-0.32} \qquad \textbf{Eq 17-44}$$

The mixture Reynolds number, Re_y, is calculated according to the equation:

$$Re_y = \frac{(124.0)\,\rho_k\, V_m\, d}{\mu_n} \qquad \textbf{Eq 17-45}$$

Calculation of this Reynolds number requires determination of mixture velocity, V_m, and mixture viscosity, μ_n. These quantities can be determined according to:

$$V_m = V_{sL} + V_{sg} \qquad \textbf{Eq 17-46}$$

$$\mu_n = \mu_L\, \lambda + \mu_g\,(1-\lambda) \qquad \textbf{Eq 17-47}$$

The two-phase friction factor ratio, f_{tpr}, representing a two-phase frictional "efficiency" can be determined by reference to Fig. 17-17 or by the equation:

$$f_{tpr} = 1 + \left[\frac{y}{1.281 - 0.478y + 0.444y^2 - 0.094y^3 + 0.00843y^4}\right] \qquad \textbf{Eq 17-48}$$

where $y = -\ln(\lambda)$.

The remaining quantity to be calculated in the Dukler scheme is an estimate of the liquid holdup, H_{Ld}. This holdup can be estimated using Fig. 17-18. This figure gives liquid holdup as a function of λ and Re_y. Since Re_y is itself a function of liquid holdup, the calculation is, in general, iterative. For most calculations, however, the Re_y line can be used for a first estimate.

Elevation Component — The elevation component of pressure drop can be found using the Flanigan method. In this method, the elevation component is calculated using the equation:

$$\Delta P_e = \frac{\rho_L H_{Lf}}{144} \Sigma Z_e \qquad \textbf{Eq 17-49}$$

where H_{Lf} is determined from Fig. 17-19 or calculated according to the formula:

$$H_{Lf} = \frac{1}{1 + 0.3264 \, (V_{sg})^{1.006}} \qquad \textbf{Eq 17-50}$$

The term Z_e is the vertical elevation rise of a hill. The rises are summed. No elevation drops are considered. This is tantamount to ignoring any possible hydrostatic pressure recoveries in downhill sections of pipeline and may lead to a considerable error in the pressure drop analysis.

Once the frictional component or pressure drop is found using the Dukler method, and the elevation component is found using the Flanigan method, the overall two-phase pressure drop is found by summing the friction and elevation components.

$$\Delta P_t = \Delta P_e + \Delta P_f \qquad \textbf{Eq 17-51}$$

Since fluid properties and liquid holdups can change rapidly in a two-phase line, accuracy is improved if this AGA calculation procedure is performed segmentally. The need for segmental calculations is one of the reasons why two-phase calculations are best suited for computer calculation.

Liquid Holdup — The liquid holdup correlation given in Fig. 17-18 is intended only for use in the Dukler friction pressure drop calculation. A correlation by Eaton et al.[21] is better suited for liquid holdup determination in liquid inventory calculations.

The Eaton[21] holdup correlation is shown in Fig. 17-20. In this figure, the holdup fraction, H_{Le}, is plotted directly as a function of the dimensionless group, N_E. This dimensionless group is of the form:

$$N_e = \frac{1.84 \, (N_{Lv})^{0.575} \left(\frac{P_{avg}}{P_b}\right)^{0.05} (N_L)^{0.1}}{N_{gv} \, (N_d)^{0.0277}} \qquad \textbf{Eq 17-52}$$

where

$$N_{Lv} = 1.938 \, V_{sL} \left(\frac{\rho_L}{\sigma}\right)^{0.25} \qquad \textbf{Eq 17-53}$$

$$N_{gv} = 1.938 V_{sg} \left(\frac{\rho_L}{\sigma}\right)^{0.25} \qquad \textbf{Eq 17-54}$$

$$N_d = 10.073 \, d \left(\frac{\rho_L}{\sigma}\right)^{0.50} \qquad \textbf{Eq 17-55}$$

$$N_L = 0.15726 \, \mu_L \left(\frac{1}{\rho_L \sigma^3}\right)^{0.25} \qquad \textbf{Eq 17-56}$$

The Eaton correlation has been found reasonably accurate by several investigators, particularly for low holdup flows.

The liquid holdup fraction, H_{Le}, is the fraction of the flow area of the pipe occupied by liquid. To calculate the liquid inventory in the pipe, I_L, the pipe internal volume is multiplied by this holdup fraction.

$$I_L = (28.80) \, H_{Le} d^2 L_m \qquad \textbf{Eq 17-57}$$

Since holdup fractions may change along the length of the pipe, a segmental calculation is more accurate.

Example 17-4 — A pipeline segment with a 6-inch inside diameter, 0.75 miles long, transports a mixture of gas and oil. The pipeline has a gradual upward slope and rises 100 feet over the 0.75 mile length. The inlet pressure of the pipeline is 400 psia, liquid viscosity is 20 cp, the vapor viscosity is 0.015 cp, and the interfacial surface tension is 15 dynes/cm. The liquid flow rate is 10 ft^3/min and the vapor flow rate is 250 actual ft^3/min. The density of the liquid phase is 55 lb/ft^3, and the density of the gas phase is 1.3 lb/ft^3 at operating conditions. What is the pressure at the downstream end of the line segment, and what is the liquid inventory of the line?

Solution Steps

Calculate the flowing liquid volume fraction using Eq 17-43.

$$\lambda = \frac{10}{250 + 10} = 0.038$$

Calculate the mixture viscosity, μ_n using Eq 17-47.

$$\mu_n = (20)\,(0.038) + (0.015)\,(1.0 - 0.038) = 0.774 \text{ cp}$$

For a first guess, assume $H_{Ld} = \lambda$ and estimate ρ_k using Eq 17-42.

$$\rho_k = \frac{(55)\,(0.038)^2}{0.038} + \frac{(1.3)\,(1.0 - 0.038)^2}{(1.0 - 0.038)} = 3.341 \text{ lb/ft}^3$$

Calculate the superficial velocities and the mixture velocity.

$$V_{sL} = \frac{10.0}{(\pi/4)\,(6/12)^2\,(60)} = 0.849 \text{ ft/sec using Eq 17-35}$$

$$V_{sg} = \frac{250}{(\pi/4)\,(6/12)^2\,(60)} = 21.22 \text{ ft/sec using Eq 17-36}$$

$$V_m = 0.849 + 21.22 = 22.07 \text{ ft/sec using Eq 17-46}$$

Calculate an estimate of the mixture Reynolds number, Re_y, using Eq 17-45

$$Re_y = \frac{(124.0)\,(3.341)\,(22.07)\,(6.0)}{(0.774)} = 70{,}878$$

From Fig. 17-18, determine a better estimate for the holdup fraction H_{Ld} using $\lambda = 0.038$, $Re_y = 70{,}878$

$$H_{Ld} = 0.12$$

Using this improved H_{Ld}, recalculate ρ_k using Eq 17-42

$$\rho_k = \frac{(55)\,(0.038)^2}{(0.12)} + \frac{(1.3)\,(1.0 - 0.038)^2}{1.0 - 0.12} = 2.029 \text{ lb/ft}^3$$

Using this improved ρ_k recalculate Re_y using Eq 17-45

$$Re_y = \frac{(124.0)\,(2.029)\,(22.07)\,(6.0)}{(0.774)} = 43{,}044$$

From Fig. 17-18 with $\lambda = 0.038$ and $Re_y = 43{,}044$, $H_{Ld} = 0.16$. Another iteration using $H_{Ld} = 0.16$ indicates $Re_y = 40{,}923$ and $H_{Ld} = 0.16$.

Calculate the single phase friction factor with $Re_y = 40{,}923$, using Eq 17-44

$$f_n = 0.0056 + 0.5\,(40{,}923)^{-0.32} = 0.0223$$

Determine the two-phase friction factor, f_{tpr}, from Fig. 17-17 using $\lambda = 0.038$

FIG. 17-17

Two-Phase Friction Factor Ratio[19]

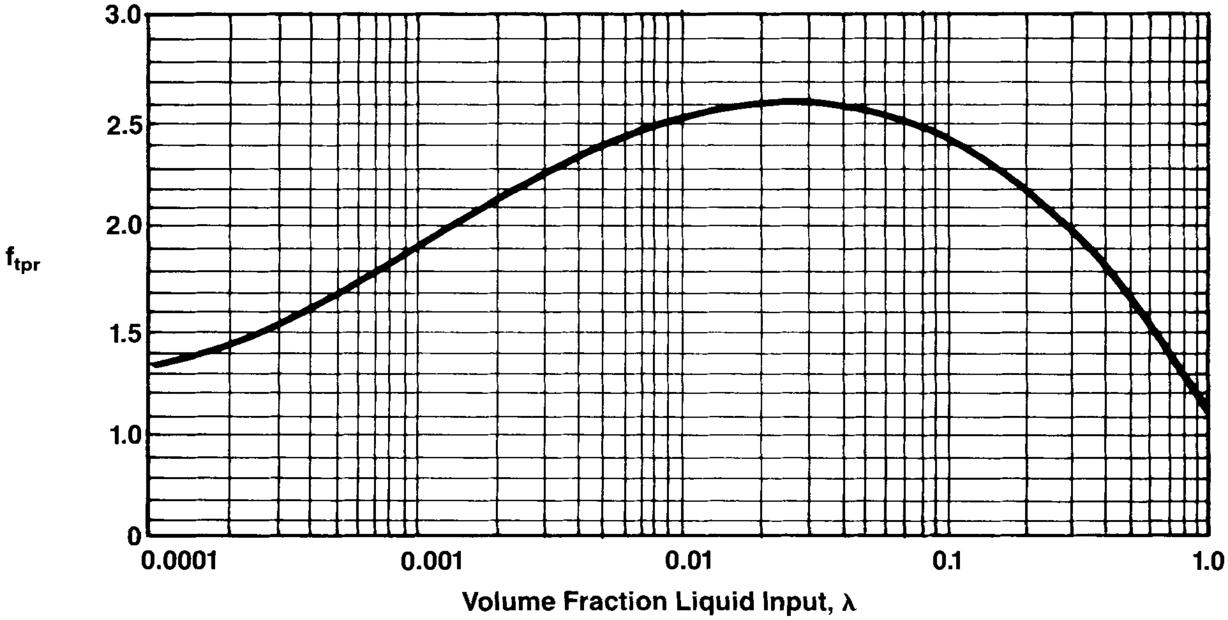

Courtesy AIChE Journal

FIG. 17-17

FIG. 17-18

Liquid Holdup Correlation[19]

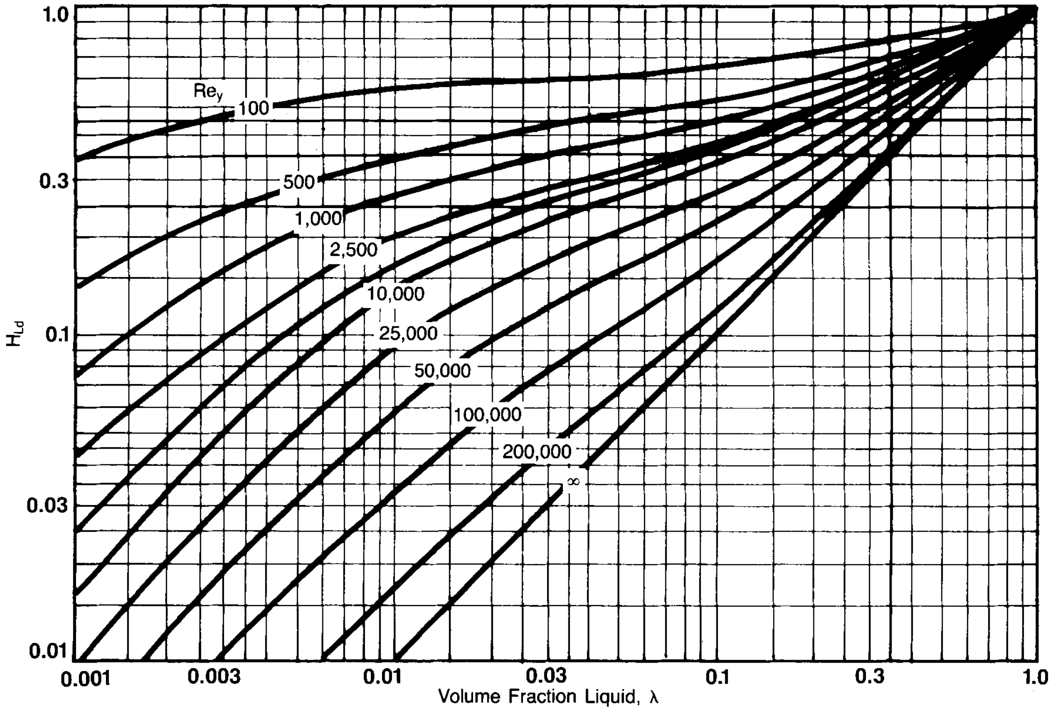

FIG. 17-19

Flanigan Liquid Holdup Correlation[20]

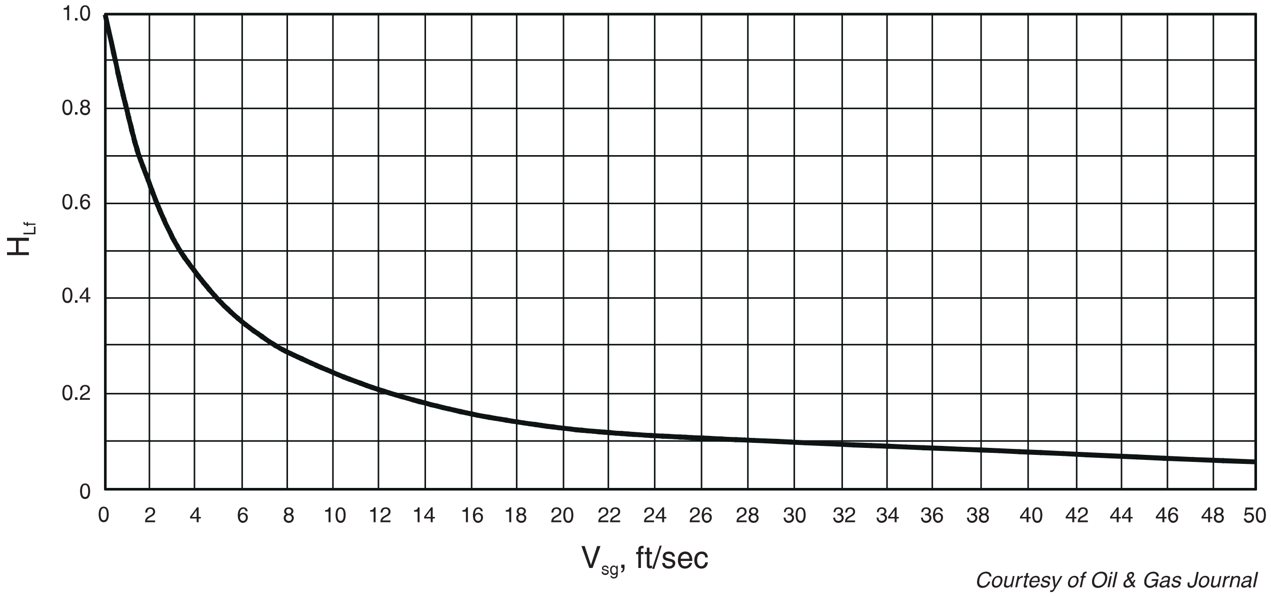

Courtesy of Oil & Gas Journal

$f_{tpr} = 2.59$

Now for $\lambda = 0.038$, $H_{Ld} = 0.16$ then $\rho_k = 1.929$ using Eq 17-42.

Calculate the frictional component of pressure drop ΔP_f using Eq 17-41

FIG. 17-20

Eaton Liquid Holdup Correlation[21]

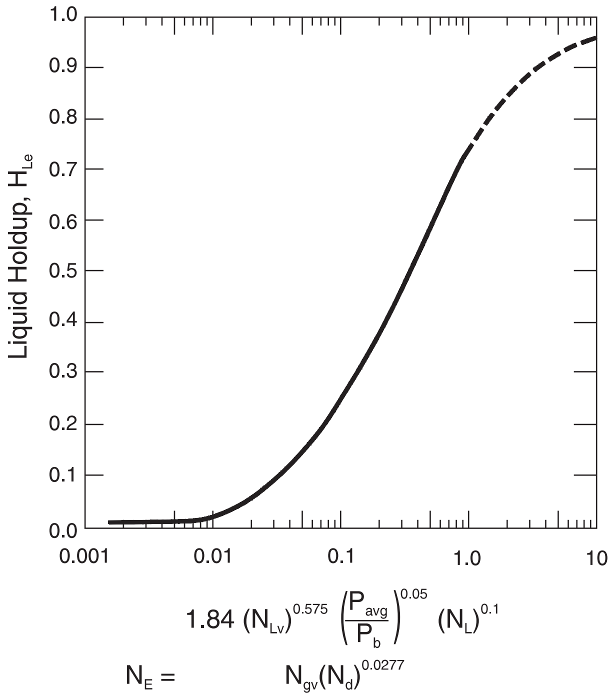

$$N_E = \frac{1.84\,(N_{Lv})^{0.575}\left(\frac{P_{avg}}{P_b}\right)^{0.05}(N_L)^{0.1}}{N_{gv}(N_d)^{0.0277}}$$

Courtesy Journal Petroleum Technology

$$\Delta P_f = \frac{(0.0223)\,(2.59)\,(1.929)\,(22.07)^2\,(0.75)}{(0.14623)\,(6.0)} = 46.39 \text{ psi}$$

Find H_{Lf} from Fig. 17-19 using $V_{sg} = 21.22$ ft/sec

$H_{Lf} = 0.13$

Determine the elevation component of pressure drop, ΔP_e, using Eq 17-49

$$\Delta P_e = \frac{(55)\,(0.13)\,(100)}{(144)} = 4.97 \text{ psi}$$

Find the total pressure drop, ΔP_t, using Eq 17-51

$$\Delta P_t = 46.39 + 4.97 = 51.36 \text{ psi}$$

Find the segment discharge pressure

$P_2 = 400 - 51.36 = 348.64$ psia

The pipeline segment has a discharge pressure of 348.64 psia.

To calculate the liquid inventory, the liquid holdup fraction from Eaton's correlation must be found. First determine the nondimensional parameters:

$$N_{Lv} = (1.938)\,(0.849)\,(55/15)^{0.25} = 2.277 \text{ using Eq 17-53}$$

$$N_{gv} = (1.938)\,(21.22)\,(55/15)^{0.25} = 56.91 \text{ using Eq 17-54}$$

$$N_d = (10.073)\,(6.0)\,(55/15)^{0.5} = 115.73 \quad \text{using Eq 17-55}$$

$$N_L = (0.15726)\,(20.0)\left[\frac{1}{(55)\,(15)^3}\right]^{0.25} = 0.152$$

using Eq 17-56

Determine Eaton's nondimensional abscissa, N_E, using Eq 17-52

$$N_E = \frac{(1.84)\,(2.277)^{0.575}\,(400/14.73)^{0.05}\,(0.152)^{0.1}}{(56.91)\,(115.73)^{0.0277}} = 0.0444$$

From Fig. 17-20, read the holdup fraction, H_{Le}

FIG. 17-21

Multiple Pipe Slug Catcher

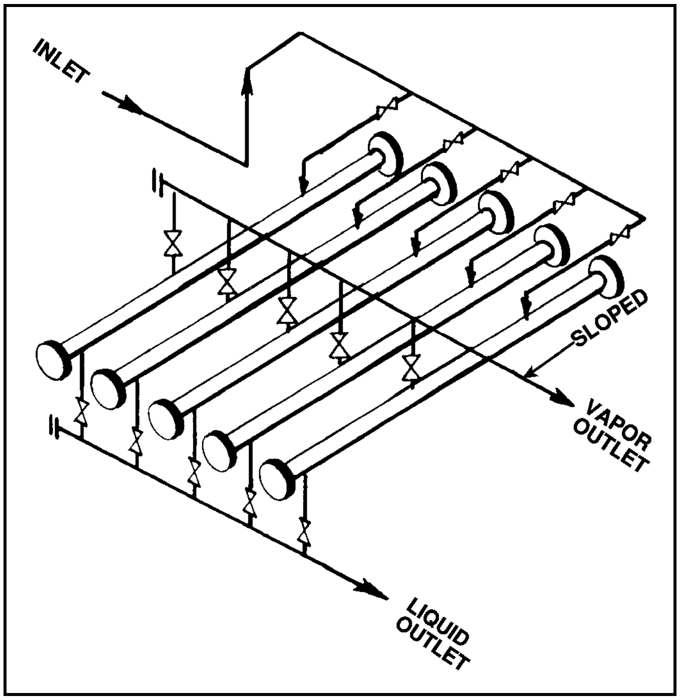

FIG. 17-22

Example Line Drip

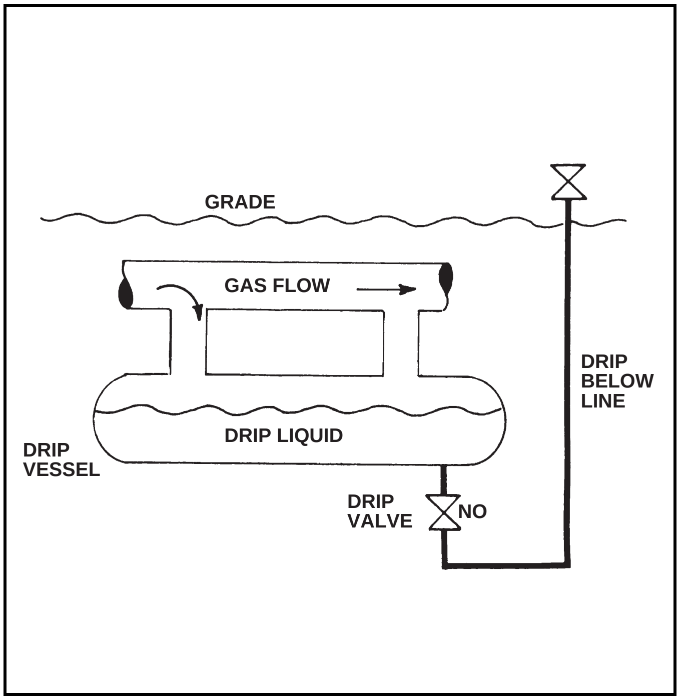

H_{Le} = 0.14

Note that this estimate is close to the H_{Lf} predicted in Fig. 17-19 for elevation pressure drop determination. It also coincides closely with the value of 0.16 from Fig. 17-18.

Calculate the pipeline segment liquid inventory from Eq 17- 57

$$I_L = (28.80)\,(0.14)\,(6.0)^2\,(0.75) = 108.86\ \text{ft}^3$$

The pipeline segment contains 108.86 cubic feet of liquid at any instant.

Liquid Slugging

Purpose of Separators — The slug flow regime is frequently encountered for pipe sizes and flow rates used in process and transmission piping. Liquid slugging introduces an additional design and operational difficulty as liquid and vapor must generally be separated at the downstream end of the two-phase flow line. The downstream separator serves both as a liquid-vapor disengaging device and as a surge vessel to absorb the fluctuating liquid flow rates caused by slugging. In order to size the separator or slug catcher, the length of the incoming slugs must be determined. Slug length calculation methods are not well developed, and there is large uncertainty in slug length determination.

Mechanisms of Slug Generation — Liquid slug lengths are difficult to determine in part because there are at least four identifiable mechanisms for liquid slug generation. Slugs can form as the result of wave formation at the liquid-gas interface in a stratified flow. When the liquid waves grow large enough to bridge the entire pipe diameter, the stratified flow pattern breaks down and a slug flow is formed.

Slugs can also form due to terrain effects. Liquid collects at a sag in the pipeline and blocks the gas flow. The pressure in this blocked gas rises until it blows the accumulated liquid in the sag out as a slug. Changes in pipeline inlet flow rate can also cause slugs. When the inlet flow rate increases, the liquid inventory in the pipeline decreases, and the excess liquid forms a slug or series of slugs. Finally, pigging can cause very large liquid slugs as the entire liquid inventory of the line is swept ahead of the pig. Of the four mechanisms described, wave growth normally produces the shortest slugs, followed in length by terrain generated slugs. Methods for calculating wave induced slugs were described by Greskovich and Shrier[22], and by Brill et al.[23] A preliminary scheme for calculating terrain generated slugs was reported by Schmidt.[24] Analytical methods for determining inlet flow rate generated slugs were given by Cunliffe,[25] and a method of analyzing pigging dynamics was given by McDonald and Baker.[26]

Slug Catchers — Slug catchers are devices at the downstream end or other intermediate points of a pipeline to absorb the fluctuating liquid inlet flow rates through liquid level fluctuation. Slug catchers may be either a vessel or constructed of pipe. All size specifications discussed in Section 7 to provide residence time for vapor-liquid disengagement also apply to vessels used as slug catchers. In addition, sufficient volume must be provided for liquid level fluctuation. Particularly for high pressure service, vessel separators may require very thick walls.

In order to avoid thick wall vessels, slug catchers are frequently made of pipe. Lengths of line pipe tens or hundreds of feet long are used as long, slender horizontal separators. The pipe is generally inclined from one to ten degrees and banks of these slightly inclined pipes are frequently manifolded together. Pipe type slug catchers are frequently less expensive than vessel type slug catchers of the same capacity due to thinner wall requirements of smaller diameter pipe. The manifold nature of multiple pipe slug catchers also makes possible the later addition of additional capacity by laying more parallel pipes. A schematic of a multiple pipe (harp) slug catcher appears in Fig. 17-21. Different pipe inclinations and different manifolding arrangements are favored by different designers.

An example of a line drip catcher is shown in Fig. 17-22. A drip vessel is connected to the incoming pipeline and often laid beneath it. A flow line from the drip vessel is used to blow the liquids out to a storage or surge vessel as they accumulate.

Pigging — Pipelines are pigged for several reasons. If water is present in the line, it must be removed periodically in order to minimize corrosion. This water accumulates in sags in the pipeline, and these low spots are particularly susceptible to corrosion. Pipelines are also pigged to improve pressure drop-flow rate performance. Water or hydrocarbon liquids that settle in sags in the pipeline constitute partial blockages that increase pressure drop. Pigging can remove these liquids and improve pipeline efficiency. Pigging can also be used as a means of limiting the required slug catcher size. By pigging at frequent intervals, liquid inventory buildup in a pipeline can be reduced, and the maximum slug size can be limited. The required downstream slug catcher size must take into account pigging frequency.

Operational hazards are associated with pigging. The very large slugs swept ahead of the pig may overwhelm inadequately sized downstream facilities. Pigs may also occasionally be destroyed in the pipeline and the resulting debris may damage downstream fittings or equipment. Even worse, the pig may become stuck in the line and require an expensive shutdown for location and removal.

FIG. 17-23

Working Pressures Refinery Piping

To determine allowable internal working pressure for straight sections of pipe in accordance with ANSI B31.3, "Code for Pressure Piping, Petroleum Refinery Piping", use the following:

$$t_m = t + c$$

$$t = \frac{P_i d_o}{2(S'E' + P_i Y')} \quad \text{or} \quad P_i = \frac{2\,tS'E'}{d_o - 2\,tY'}$$

For $t > \frac{d_o}{6}$ or $\frac{P_i}{S'\,E'} > 0.385$ calculation of pressure design thickness requires special consideration.

where:

t_m = minimum required thickness, satisfying requirements for pressure, and mechanical, corrosion, and erosion allowances, inches. Selected thickness shall be no less than t_m plus the manufacturer's negative tolerance. The typical negative tolerance is 12.5%.

t = pressure design thickness, in.

c = the sum of the mechanical allowances (thread depth and groove depth), corrosion, and erosion allowances, in.

P_i = internal design pressure, psig.

d_o = outside diameter of pipe, in.

S' = allowable stresses, psi.

E' = longitudinal weld joint factor:
Seamless = 1.000, ERW = 0.85

Y' = coefficient having values for ferritic steels as follows:
0.4 up to and including 900°F
0.5 for 950°F
0.7 for 1,000°F and above

PIPE AND FLANGE DATA

The Petroleum Refinery Piping Code (ANSI B31.3) is used to determine the allowable pressure limits for piping inside refineries and other processing facilities. Refer to Fig. 17-23 for the calculation method.

FIG. 17-24

Working Pressures Transmission Lines

To determine allowable internal working pressures for piping outside of refineries and other processing facilities in accordance with ANSI B31.8-1999, "Code of Pressure Piping, Gas Transmission and Distribution Piping," use the following:

$$P_i = \frac{2\,S''\,t}{d_o}(F'')\,(E'')\,(T'')$$

Where

P_i = Design pressure, psig

S'' = Specified minimum yield strength, psi

d_o = Nominal outside diameter, in.

t = Nominal wall thickness, in.

F'' = Construction type design factor, Table 841.114A and Par. 840.2 (see note)

Location	Class	F″
1	Div 1	.80
	Div 2	.72
2		.60
3		.50
4		.40

Complete details are covered in Par. 841.

E'' = Longitudinal joint factor, Table 841.115A
Normally a factor of 1.0 is used for seamless and welded pipe except for the following:

Fusion Welded A 134 and A 139	0.80
Spiral Welded A 211	0.80
Furnace Butt Welded ASTM-A53, API-5L	0.60

T'' = Temperature derating factor, Table 841.116A

Temp, °F	Factor T″
250 or less	1.000
300	0.967
350	0.933
400	0.900
450	0.867

For intermediate temperatures, interpolate for derating factor.

Note: Factor reflecting location of line, proximity to roads, public or private land, etc.

FIG. 17-25

Representative Allowable Stresses in Tension for Materials (Developed from ASME B31.3, 2002, Tables A-1, A-1B)

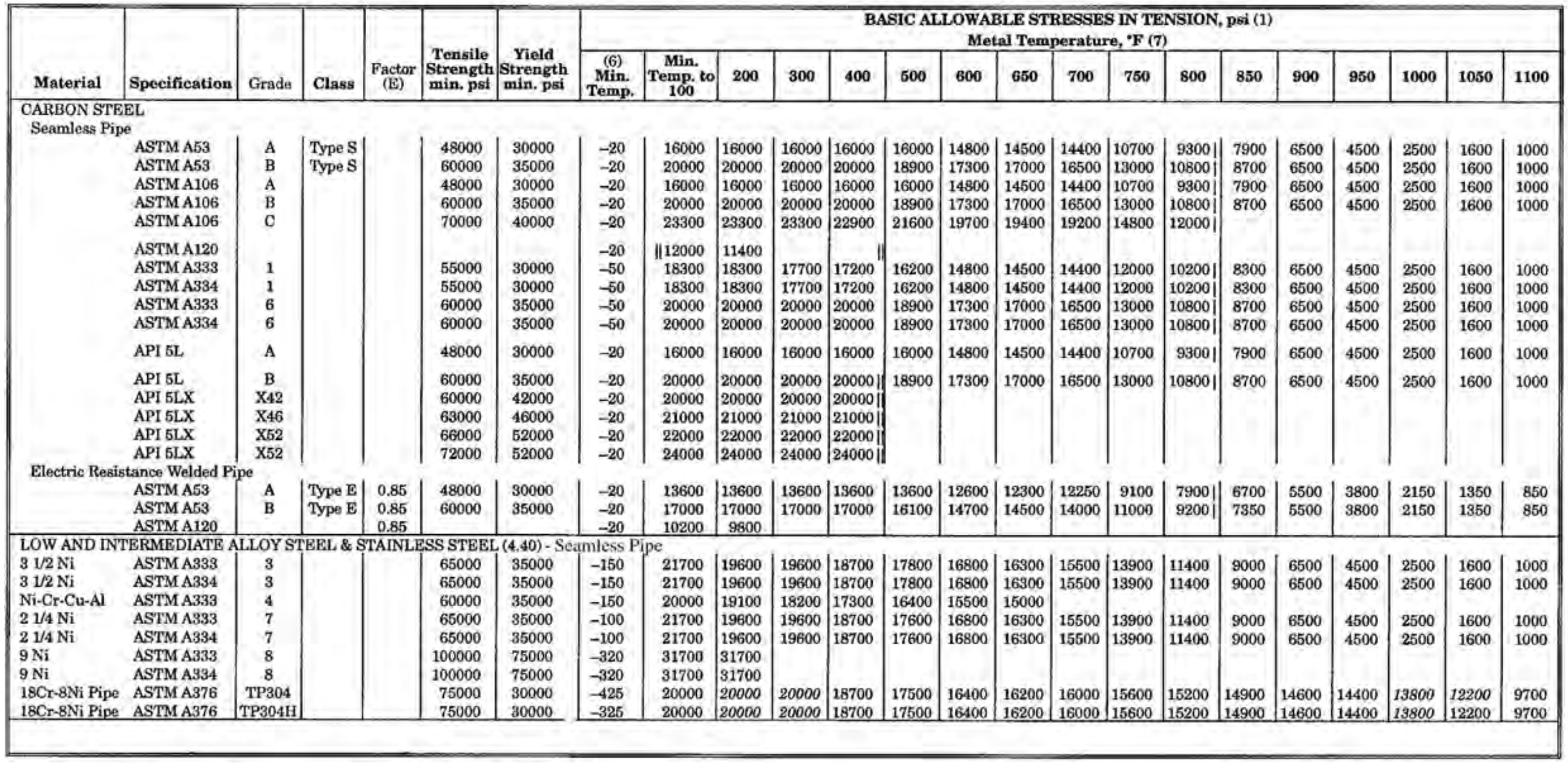

Material	Specification	Grade	Class	Factor (E)	Tensile Strength min. psi	Yield Strength min. psi	BASIC ALLOWABLE STRESSES IN TENSION, psi (1) Metal Temperature, °F (7)																
							(6) Min. Temp.	Min. Temp. to 100	200	300	400	500	600	650	700	750	800	850	900	950	1000	1050	1100
CARBON STEEL																							
Seamless Pipe																							
	ASTM A53	A	Type S		48000	30000	–20	16000	16000	16000	16000	16000	14800	14500	14400	10700	9300 |	7900	6500	4500	2500	1600	1000
	ASTM A53	B	Type S		60000	35000	–20	20000	20000	20000	20000	18900	17300	17000	16500	13000	10800 |	8700	6500	4500	2500	1600	1000
	ASTM A106	A			48000	30000	–20	16000	16000	16000	16000	16000	14800	14500	14400	10700	9300 |	7900	6500	4500	2500	1600	1000
	ASTM A106	B			60000	35000	–20	20000	20000	20000	20000	18900	17300	17000	16500	13000	10800 |	8700	6500	4500	2500	1600	1000
	ASTM A106	C			70000	40000	–20	23300	23300	23300	22900	21600	19700	19400	19200	14800	12000 |						
	ASTM A120						–20	||12000	11400		||												
	ASTM A333	1			55000	30000	–50	18300	18300	17700	17200	16200	14800	14500	14400	12000	10200 |	8300	6500	4500	2500	1600	1000
	ASTM A334	1			55000	30000	–50	18300	18300	17700	17200	16200	14800	14500	14400	12000	10200 |	8300	6500	4500	2500	1600	1000
	ASTM A333	6			60000	35000	–50	20000	20000	20000	20000	18900	17300	17000	16500	13000	10800 |	8700	6500	4500	2500	1600	1000
	ASTM A334	6			60000	35000	–50	20000	20000	20000	20000	18900	17300	17000	16500	13000	10800 |	8700	6500	4500	2500	1600	1000
	API 5L	A			48000	30000	–20	16000	16000	16000	16000	16000	14800	14500	14400	10700	9300 |	7900	6500	4500	2500	1600	1000
	API 5L	B			60000	35000	–20	20000	20000	20000	20000 ||	18900	17300	17000	16500	13000	10800 |	8700	6500	4500	2500	1600	1000
	API 5LX	X42			60000	42000	–20	20000	20000	20000	20000 ||												
	API 5LX	X46			63000	46000	–20	21000	21000	21000	21000 ||												
	API 5LX	X52			66000	52000	–20	22000	22000	22000	22000 ||												
	API 5LX	X52			72000	52000	–20	24000	24000	24000	24000 ||												
Electric Resistance Welded Pipe																							
	ASTM A53	A	Type E	0.85	48000	30000	–20	13600	13600	13600	13600	13600	12600	12300	12250	9100	7900 |	6700	5500	3800	2150	1350	850
	ASTM A53	B	Type E	0.85	60000	35000	–20	17000	17000	17000	17000	16100	14700	14500	14000	11000	9200 |	7350	5500	3800	2150	1350	850
	ASTM A120			0.85			–20	10200	9800														
LOW AND INTERMEDIATE ALLOY STEEL & STAINLESS STEEL (4.40) - Seamless Pipe																							
3 1/2 Ni	ASTM A333	3			65000	35000	–150	21700	19600	19600	18700	17800	16800	16300	15500	13900	11400	9000	6500	4500	2500	1600	1000
3 1/2 Ni	ASTM A334	3			65000	35000	–150	21700	19600	19600	18700	17800	16800	16300	15500	13900	11400	9000	6500	4500	2500	1600	1000
Ni-Cr-Cu-Al	ASTM A333	4			60000	35000	–150	20000	19100	18200	17300	16400	15500	15000									
2 1/4 Ni	ASTM A333	7			65000	35000	–100	21700	19600	19600	18700	17600	16800	16300	15500	13900	11400	9000	6500	4500	2500	1600	1000
2 1/4 Ni	ASTM A334	7			65000	35000	–100	21700	19600	19600	18700	17600	16800	16300	15500	13900	11400	9000	6500	4500	2500	1600	1000
9 Ni	ASTM A333	8			100000	75000	–320	31700	31700														
9 Ni	ASTM A334	8			100000	75000	–320	31700	31700														
18Cr-8Ni Pipe	ASTM A376	TP304			75000	30000	–425	20000	*20000*	*20000*	18700	17500	16400	16200	16000	15600	15200	14900	14600	14400	*13800*	*12200*	9700
18Cr-8Ni Pipe	ASTM A376	TP304H			75000	30000	–325	20000	*20000*	*20000*	18700	17500	16400	16200	16000	15600	15200	14900	14600	14400	*13800*	12200	9700

Note: ASME 31.3 Appendix A includes notes which may additionally limit allowable stress values or application of the above materials due to temperature limitations, wall thickness, heat treating, material composition, etc. Refer to ASME 31.3 Appendix A notes for these limitations or special requirements applicable to particular materials.

FIG. 17-26

Design Properties and Allowable Working Pressures for Piping ASTM A106, grade B seamless pipe—Petroleum Refinery Piping Code for Pressure Piping ANSI B31.3-2002—Corrosion allowance = 0.05 inch

Nom pipe size in.	Sch. No.	Weight of pipe lb./ft.	O.D. in.	Wall thk. in.	I D (d) in.	Flow area sq ft	Allowable working pressures for temperatures (in °F) not to exceed.						
							–20 to 100	200	300	400	500	600	700
1/2	S40	.851	.840	.109	.622	.00211	2258	2258	2258	2258	2134	1953	1863
3/4	S40	1.131	1.050	.113	.824	.00371	1933	1933	1933	1933	1827	1672	1595
	X80	1.474		.154	.742	.00300	3451	3451	3451	3451	3261	2985	2847
1	S40	1.679	1.315	.133	1.049	.00600	2103	2103	2103	2103	1988	1819	1735
	X80	2.172		.179	.957	.00499	3468	3468	3468	3468	3277	3000	2861
	160	2.844		.250	.815	.00362	5720	5720	5720	5720	5405	4948	4719
	XX	3.659		.358	.599	.00196	9534	9534	9534	9534	9010	8247	7866
1-1/2	S40	2.718	1.900	.145	1.610	.01414	1672	1672	1672	1672	1580	1446	1379
	X80	3.632		.200	1.500	.01225	2777	2777	2777	2777	2625	2402	2291
	160	4.866		.281	1.338	.00976	4494	4494	4494	4494	4247	3887	3707
	XX	6.409		.400	1.100	.00660	7228	7228	7228	7228	6831	6253	5963
2	S40	3.653	2.375	.154	2.067	.02330	1469	1469	1469	1469	1388	1270	1212
	X80	5.022		.218	1.939	.02050	2488	2488	2488	2488	2351	2152	2053
	160	7.445		.343	1.687	.01556	4600	4600	4600	4600	4347	3979	3795
	XX	9.030		.436	1.503	.01232	6284	6284	6284	6284	5939	5436	5185
3	S40	7.58	3.500	.216	3.068	.05130	1640	1640	1640	1640	1550	1419	1353
	X80	10.25		.300	2.900	.04587	2552	2552	2552	2552	2412	2207	2105
	160	14.33		.438	2.624	.03755	4122	4122	4122	4122	3895	3566	3401
	XX	18.58		.600	2.300	.02885	6089	6089	6089	6089	5754	5267	5024
4	S40	10.79	4.500	.237	4.026	.08840	1439	1439	1439	1439	1360	1244	1187
	X80	14.99		.337	3.826	.07986	2275	2275	2275	2275	2150	1968	1877
	160	22.51		.531	3.438	.06447	3978	3978	3978	3978	3760	3441	3282
	XX	27.54		.674	3.152	.05419	5307	5307	5307	5307	5015	4590	4378
6	S40	18.98	6.625	.280	6.065	.2006	1205	1205	1205	1205	1139	1042	994
	X80	28.58		.432	5.761	.1810	2062	2062	2062	2062	1948	1783	1701
	160	45.30		.718	5.187	.1469	3753	3753	3753	3753	3546	3246	3097
	XX	53.17		.864	4.897	.1308	4659	4659	4659	4659	4403	4030	3844
8	S40	28.56	8.625	.322	7.981	.3474	1098	1098	1098	1098	1037	950	906
	X80	43.4		.500	7.625	.3171	1864	1864	1864	1864	1761	1612	1537
	XX	72.4		.875	6.875	.2578	3554	3554	3554	3554	3359	3074	2932
	160	74.7		.906	6.813	.2532	3699	3699	3699	3699	3496	3200	3052
10	S40	40.5	10.750	.365	10.020	.5475	1022	1022	1022	1022	966	884	843
	X60	54.7		.500	9.750	.5185	1484	1484	1484	1484	1403	1284	1224
	160	115.7		1.125	8.500	.3941	3736	3736	3736	3736	3531	3232	3082
12	S	49.6	12.750	.375	12.000	.7854	888	888	888	888	839	768	732
	X	65.4		.500	11.750	.7528	1245	1245	1245	1245	1177	1077	1027
	160	160.3		1.312	10.126	.5592	3699	3699	3699	3699	3496	3200	3052
14	10	36.7	14.000	.250	13.500	.9940	486	486	486	486	460	421	401
	S30	54.6		.375	13.250	.9575	807	807	807	807	763	698	666
	X	72.1		.500	13.000	.9211	1132	1132	1132	1132	1069	979	934
16	10	42.1	16.000	.250	15.500	1.310	425	425	425	425	402	368	351
	S30	62.6		.375	15.250	1.268	705	705	705	705	666	609	581
	S40	82.8		.500	15.000	1.227	987	987	987	987	933	854	815
18	10	47.4	18.000	.250	17.500	1.670	377	377	377	377	357	326	311
	S	70.6		.375	17.250	1.622	625	625	625	625	591	541	516
	X	93.5		.500	17.000	1.575	876	876	876	876	828	757	722
20	10	52.7	20.000	.250	19.500	2.074	339	339	339	339	321	293	280
	S20	78.6		.375	19.250	2.021	562	562	562	562	531	486	464
	X30	104.1		.500	19.000	1.969	787	787	787	787	743	680	649
24	10	63.4	24.000	.250	23.500	3.012	282	282	282	282	267	244	233
	S20	94.6		.375	23.250	2.948	468	467	467	467	442	404	386
	X	125.5		.500	23.000	2.883	660	654	654	654	618	565	539

Note: The above allowable working pressures are calculated from Fig. 17-23 using a reduction in t_m to 87.5% of the wall thickness shown above to recognize mill wall tolerance of 12.5%.

FIG. 17-27

Gas Transmission and Distribution Piping

Code for Pressure Piping ANSI B31.8-1999

Carbon Steel and High Yield Strength Pipe

(Values apply to A106, API 5L and API 5LX pipe having the same specified minimum yield strength as shown**)**

Nom Pipe Size	O.D.	Wall Thk.	Allowable Working Pressures up to 250°F, in psig																			
			Construction Type Design Factors																			
			Type A, F = 0.72*					Type B, F = 0.60					Type C, F = 0.50					Type D, F = 0.40				
			GR.B					GR.B					GR.B					GR.B				
			35,000	42,000	46,000	52,000	60,000	35,000	42,000	46,000	52,000	60,000	35,000	42,000	46,000	52,000	60,000	35,000	42,000	46,000	52,000	60,000
2	(STD)	.154	3268					2723					2270					1816				
	2.375	.218	4626					3855					3213					2570				
3		.125	1800					1500					1250					1000				
		.156	2246					1872					1560					1248				
	3.500	.188	2707					2256					1880					1504				
	(STD)	.216	3110					2592					2160					1728				
		.250	3600					3000					2500					2000				
		.281	4046					3372					2810					2248				
		.300	4320					3600					3000					2400				
4		.125	1400	1680	1840			1167	1400	1533			973	1167	1278			778	933	1022		
		.156	1747	2097	2296			1456	1747	1913			1214	1456	1595			971	1165	1276		
		.188	2105	2526	2767			1754	2105	2306			1462	1755	1922			1170	1404	1537		
	4.500	.219	2453	2943	3223			2044	2453	2686			1704	2044	2239			1363	1635	1791		
	(STD)	.237	2654	3185	3488			2212	2654	2907			1844	2212	2423			1475	1770	1938		
		.250	2800	3360	3680			2333	2800	3067			1945	2333	2556			1556	1869	2044		
		.281	3147	3776	4136			2623	3147	3447			2186	2622	2873			1748	2098	2298		
		.312	3494	4193	4593			2912	3494	3827			2427	2912	3190			1941	2330	2552		
		.337	3774	4530	4961			3145	3775	4134			2621	3146	3445			2097	2516	2756		
6		.156	1187	1424	1560	1763		989	1187	1300	1469		824	989	1083	1224		659	791	866	980	
		.188	1429	1716	1880	2124		1192	1430	1567	1770		993	1192	1306	1475		794	954	1044	1180	
		.219	1666	2000	2190	2475		1388	1666	1825	2063		1157	1389	1521	1719		926	1111	1216	1375	
	6.625	.250	1902	2282	2500	2826		1585	1902	2083	2355		1321	1585	1736	1963		1057	1268	1389	1570	
	(STD)	.280	2130	2556	2799	3164		1775	2130	2333	2637		1479	1775	1944	2198		1183	1420	1555	1758	
		.312	2373	2848	3120	3527		1978	2374	2600	2933		1649	1978	2167	2449		1319	1582	1733	1959	
		.375	2853	3424	3750	4237		2377	2853	3125	3531		1981	2378	2604	2943		1585	1902	2083	2354	
		.432	3287	3943	4319	4883		2739	3286	3599	4069		2283	2738	3000	3391		1826	2191	2400	2713	
8		.156	912	1094	1198	1354		760	912	998	1128		633	760	832	940		506	608	666	752	
		.188	1098	1318	1444	1632		915	1098	1203	1360		763	915	1003	1133		610	732	802	907	
		.203	1186	1424	1559	1762		989	1186	1299	1469		824	989	1083	1224		659	791	866	979	
		.219	1280	1535	1681	1901		1067	1280	1401	1584		889	1067	1168	1320		711	853	934	1056	
		.250	1461	1753	1920	2170		1217	1461	1600	1809		1014	1217	1333	1507		812	974	1067	1206	
	8.625	.277	1618	1942	2128	2405		1349	1618	1773	2004		1124	1349	1478	1670		899	1079	1182	1336	
		.312	1823	2189	2396	2709		1520	1823	1997	2258		1266	1520	1664	1881		1013	1216	1331	1505	
	(STD)	.322	1882	2258	2473	2796		1568	1882	2061	2329		1307	1568	1717	1941		1045	1254	1374	1553	
		.344	2011	2412	2642	2988		1676	2011	2202	2490		1396	1676	1835	2075		1117	1340	1468	1660	
		.375	2191	2628	2880	3256		1826	2191	2399	2713		1521	1826	1999	2261		1217	1460	1599	1808	
		.438	2560	3071	3364	3803		2133	2560	2804	3170		1778	2133	2336	2641		1422	1706	1869	2113	
		.500	2922	3506	3840	4341		2435	2922	3200	3617		2029	2435	2667	3014		1623	1948	2133	2412	
10		.188	881	1058	1158	1310		733	881	965	1091		612	735	804	909		490	588	644	728	
		.203	959	1143	1251	1415		794	952	1043	1179		661	794	869	983		529	635	695	786	
		.219	1026	1231	1348	1525		855	1026	1124	1271		713	855	936	1059		570	684	749	847	
		.250	1172	1407	1540	1741		977	1172	1284	1451		814	977	1070	1209		651	781	856	967	
	10.750	.279	1309	1570	1719	1944		1091	1309	1433	1620		909	1091	1194	1350		727	872	955	1080	
		.307	1440	1728	1892	2138		1200	1440	1577	1782		1000	1200	1314	1486		800	960	1051	1189	
		.344	1613	1935	2120	2396		1344	1613	1767	1997		1120	1344	1473	1664		896	1075	1178	1331	
	(STD)	.365	1711	2054	2249	2542		1426	1711	1874	2119		1188	1426	1562	1766		951	1141	1249	1412	
		.438	2054	2464	2700	3051		1712	2054	2250	2543		1426	1712	1875	2119		1141	1369	1500	1695	
		.500	2344	2813	3081	3483		1953	2344	2567	2902		1628	1953	2140	2419		1302	1563	1712	1935	
12		.188	743	892	977	1104		619	743	814	920		516	619	678	767		413	495	543	613	
		.203	803	963	1055	1193		669	803	879	995		558	669	733	829		446	535	586	663	
		.219	866	1039	1138	1287		722	866	948	1073		601	722	790	894		481	577	632	715	
		.250	988	1186	1299	1468		824	988	1082	1224		686	824	902	1020		549	659	722	816	
		.281	1111	1332	1460	1651		926	1111	1217	1376		771	926	1014	1146		617	740	811	917	
	12.750	.312	1233	1480	1620	1832		1028	1233	1350	1527		856	1028	1125	1273		685	822	900	1018	
		.330	1305	1566	1715	1939		1088	1305	1430	1616		906	1088	1191	1346		725	870	953	1077	
		.344	1359	1631	1786	2020		1133	1359	1488	1683		944	1133	1240	1403		755	906	992	1122	
	(STD)	.375	1482	1779	1948	2202		1235	1482	1624	1835		1029	1235	1353	1529		824	988	1082	1224	
		.406	1606	1926	2110	2385		1338	1606	1758	1988		1115	1338	1465	1656		892	1070	1172	1325	
		.438	1732	2077	2275	2572		1443	1732	1896	2144		1203	1443	1580	1786		962	1154	1264	1429	
		.500	1976	2372	2598	2936		1647	1976	2165	2447		1373	1647	1804	2039		1098	1318	1443	1631	

* Type A construction also applicable to "Liquid Petroleum Transportation Piping Code," ANSI B31.4-2002

FIG. 17-27 (Cont'd.)

Gas Transmission and Distribution Piping

Nom Pipe Size	O.D.	Wall Thk.	Allowable Working Pressures up to 250°F, in psig																			
			Construction Type Design Factors																			
			Type A, F = 0.72*					Type B, F = 0.60					Type C, F = 0.50					Type D, F = 0.40				
			GR.B					GR.B					GR.B					GR.B				
			35,000	42,000	46,000	52,000	60,000	35,000	42,000	46,000	52,000	60,000	35,000	42,000	46,000	52,000	60,000	35,000	42,000	46,000	52,000	60,000
		.219	689	828	905	1024	1183	575	689	755	854	986	479	575	629	711	822	383	460	503	569	657
		.250	786	945	1035	1170	1350	656	788	863	975	1125	547	656	719	813	938	438	525	575	650	750
		.281	886	1063	1164	1316	1518	738	886	970	1097	1265	615	738	809	914	1054	492	591	647	731	843
		.312	982	1179	1291	1460	1685	818	982	1076	1217	1404	682	819	896	1014	1170	546	655	717	811	936
16	16.000	.344	1084	1300	1424	1609	1858	903	1084	1187	1341	1548	753	903	989	1118	1290	602	722	791	894	1032
	(STD)	.375	1181	1418	1553	1755	2025	984	1181	1294	1463	1688	820	984	1078	1219	1407	656	788	863	975	1125
		.438	1379	1655	1813	2049	2365	1149	1379	1511	1707	1971	958	1149	1259	1423	1643	766	919	1007	1138	1314
		.500	1575	1890	2070	2340	2700	1313	1575	1725	1950	2250	1094	1313	1438	1625	1875	875	1050	1150	1300	1500
		.625	1969	2363	2588	2925	3375	1641	1969	2157	2438	2812	1368	1641	1796	2031	2344	1094	1313	1438	1625	1875
		.250	630	756	828	936	1080	525	630	690	780	900	438	525	575	650	750	350	420	460	520	600
		.281	709	851	931	1053	1214	591	709	776	878	1012	492	591	647	731	843	394	473	518	585	674
		.312	786	943	1033	1168	1348	656	786	861	973	1123	547	656	719	813	936	438	525	575	650	749
		.344	867	1040	1139	1289	1486	723	868	950	1074	1238	603	723	791	895	1032	482	578	633	716	826
20	(STD)	.375	945	1134	1242	1404	1620	788	945	1035	1170	1350	656	788	863	975	1125	525	630	690	780	900
	20.000	.406	1023	1228	1345	1520	1754	853	1023	1121	1267	1462	710	853	934	1056	1218	568	682	747	844	974
		.438	1103	1324	1450	1639	1892	919	1103	1208	1366	1577	766	919	1007	1138	1314	613	735	805	910	1051
		.500	1260	1512	1656	1872	2160	1050	1260	1380	1560	1800	875	1050	1150	1300	1500	700	840	920	1040	1200
		.625	1575	1890	2070	2340	2700	1313	1575	1725	1950	2250	1094	1313	1438	1625	1875	875	1050	1150	1300	1500
		.750	1890	2268	2484	2808	3240	1575	1890	2070	2340	2700	1313	1575	1725	1950	2250	1050	1260	1380	1560	1800
		.281	590	709	776	877	1012	492	591	647	731	843	410	492	539	609	703	328	394	431	487	562
		.312	655	786	861	973	1123	547	656	719	812	936	456	547	599	677	780	365	438	479	542	624
		.344	722	866	949	1073	1238	602	722	791	894	1032	502	602	659	745	860	401	481	527	596	688
	(STD)	.375	788	945	1035	1170	1350	656	788	862	975	1125	547	656	719	813	938	438	525	575	650	750
24	24.000	.406	853	1024	1121	1267	1462	711	853	935	1056	1218	592	711	779	880	1015	474	569	623	704	812
		.438	919	1103	1208	1366	1577	766	919	1006	1138	1314	638	766	839	948	1095	510	613	671	758	876
		.500	1050	1260	1380	1560	1800	875	1050	1150	1300	1500	729	875	958	1083	1250	583	700	767	867	1000
		.625	1312	1575	1725	1950	2250	1094	1313	1437	1625	1875	911	1094	1198	1354	1563	729	875	958	1083	1250
		.750	1575	1890	2070	2340	2700	1313	1575	1725	1950	2250	1094	1313	1438	1625	1875	875	1050	1150	1300	1500
		.281	545	654	717	810	934	454	545	597	675	778	379	454	498	563	649	303	363	398	450	519
		.312	604	727	796	900	1037	503	604	663	750	864	421	505	553	625	720	337	404	442	500	576
	26.000	.344	667	800	876	990	1143	556	666	730	825	953	463	555	606	688	794	370	444	487	550	635
	(STD)	.375	726	872	955	1080	1246	606	727	796	900	1039	505	606	663	750	866	404	485	531	600	692
26		.406	787	945	1035	1170	1349	656	787	863	975	1124	547	656	719	813	937	437	525	575	650	750
		.438	848	1018	1115	1260	1456	707	848	929	1050	1213	589	707	774	875	1011	471	565	619	700	809
		.500	969	1163	1274	1440	1662	808	969	1062	1200	1385	673	808	885	1000	1154	538	646	708	800	923
		.625	1211	1454	1592	1800	2077	1010	1212	1327	1500	1731	841	1010	1106	1250	1442	673	808	885	1000	1154
		.750	1454	1745	1911	2160	2492	1212	1454	1592	1800	2077	1010	1212	1327	1500	1731	808	969	1062	1200	1385
		.312	525	630	690	780	899	438	525	575	650	749	365	438	479	542	624	292	350	383	433	499
		.344	578	693	759	858	991	482	577	632	715	826	401	481	527	596	688	321	385	422	477	550
	(STD)	.375	630	756	828	936	1080	525	630	690	780	900	437	525	575	650	750	350	420	460	520	600
30	30.000	.406	682	819	897	1014	1169	568	682	747	845	974	474	569	623	704	812	379	455	498	563	650
		.438	735	882	966	1092	1261	612	735	805	910	1051	510	612	671	758	876	408	490	537	607	701
		.500	840	1008	1104	1248	1440	700	840	920	1040	1200	583	700	767	867	1000	467	560	613	693	800
		.625	1050	1260	1380	1560	1800	875	1050	1150	1300	1500	729	875	958	1083	1250	583	700	767	867	1000
		.750	1260	1512	1656	1872	2160	1050	1260	1380	1560	1800	875	1050	1150	1300	1500	700	840	920	1040	1200

* Type A construction also applicable to "Liquid Petroleum Transportation Piping Code," ANSI B31.4-2002

Notes:
1. All dimensions are in inches
2. See Fig 17-24

FIG. 17-28

Pressure-Temperature Ratings for Pipe Flanges and Flanged Fittings from ANSI B16.5-1996

CLASS	150	300	400	600	900	1500	2500
Material Group 1.1			**(Carbon Steel)**			**A105 (1), A216–WCB (1), A515–70 (1) A516–70 (1) (2) A350–LF2 (1), A537–C1.1 (3)**	
°F	Pressures are in pounds per square inch, gauge (psig)						
–20 to 100	285	740	990	1480	2220	3705	6170
200	260	675	900	1350	2025	3375	5625
300	230	655	875	1315	1970	3280	5470
400	200	635	845	1270	1900	3170	5280
500	170	600	800	1200	1795	2995	4990
600	140	550	730	1095	1640	2735	4560
650	125	535	715	1075	1610	2685	4475
700	110	535	710	1065	1600	2665	4440
750	95	505	670	1010	1510	2520	4200
800	80	410	550	825	1235	2060	3430
850	65	270	355	535	805	1340	2230
900	50	170	230	345	515	860	1430
950	35	105	140	205	310	515	860
1000	20	50	70	105	155	260	430
Material Group 2.1			**(Type 304)**				**A182–F304 (5), A182–F304H A240–304 (5), A351–CF8 (5) A351–CF3 (4)**
–20 to 100	275	720	960	1440	2160	3600	6000
200	230	600	800	1200	1800	3000	5000
300	205	540	720	1080	1620	2700	4500
400	190	495	660	995	1490	2485	4140
500	170	465	620	930	1395	2330	3880
600	140	435	580	875	1310	2185	3640
650	125	430	575	860	1290	2150	3580
700	110	425	565	850	1275	2125	3540
750	95	415	555	830	1245	2075	3460
800	80	405	540	805	1210	2015	3360
850	65	395	530	790	1190	1980	3300
900	50	390	520	780	1165	1945	3240
950	35	380	510	765	1145	1910	3180
1000	20	320	430	640	965	1605	2675
1050		310	410	615	925	1545	2570
1100		255	345	515	770	1285	2145
1150		200	265	400	595	995	1655
1200		155	205	310	465	770	1285
1250		115	150	225	340	565	945
1300		85	115	170	255	430	715
1350		60	80	125	185	310	515
1400		50	65	90	145	240	400
1450		35	45	70	105	170	285
1500		25	35	55	80	135	230

Notes:

(1) Upon prolonged exposure to temperatures above about 800°F (425°C), the carbide phase of carbon steel may be converted to graphite: permissible but not recommended for prolonged use above 800°F

(2) Not to be used over 850°F

(3) Not to be used over 700°F

(4) Not to be used over 800°F

(5) At temperatures over 1000°F (540°C), use only when the carbon content is 0.04 percent or higher

(6) For temperatures above 1000°F (540°C), use only if the material is heat treated by heating it to a temperature of at least 1900°F (1040°C) and quenching in water or rapidly cooling by other means

The table of allowable stresses, Fig. 17-25, is extracted from ANSI B31.3. The designer is strongly urged to consult the latest ANSI B31.3 publication for full description of the code. A tabular compilation of maximum allowable working pressures calculated according to ANSI B31.3 appears in Fig. 17-26.

For piping outside of refineries and other processing facilities, a separate code applies for determining allowable pressure limits, ANSI B31.8. Refer to Fig. 17-24 for the calculation method.

The designer is encouraged to refer to the latest ANSI B31.8 standard for comprehensive code description. A tabular compilation of maximum allowable working pressures computed according to ANSI B31.8 appears in Fig. 17-27.

Fig. 17-28 provides pressure ratings for steel flanges and flanged fittings.

REFERENCES

1. "Fluid Mechanics" by N. DeNevers, Addison-Wesley, Reading, Mass., 1970, p. 127.
2. "Experimental Research on the Flow of Water in Pipes" by H. Darcy, Mem. Acad. Sci. Inst. Imp. Fr., Vol. 15, 1858, p. 141 (in French), "Mechanics of Engineering" by J. Weisbach, Van Nostrand, 1872 (translated from German).
3. "Friction Factors for Pipe Flow" by L. Moody, Trans ASME 66, 1944.
4. C.F. Colebrook, "Turbulent Flow in Pipes with Particular Reference to the Transition Region Between the Smooth and Rough Pipe Law," J. Inst. Civil Engineers, London, 1939.
5. "Flow of Fluids through Valves, Fittings and Pipe," by the Crane Co., Chicago, Technical Paper No. 410, 1988.
6. "Steady Flow in Gas Pipelines," American Gas Association, IGT Technical Report 10, Chicago, 1965.
7. T.R. Weymouth, Transactions of the American Society of Mechanical Engineers, Vol. 34, 1912.
8. F.F. Richardson of Foreman-Richardson-Baird, The Petroleum Engineer, July, 1945.
9. F.N. Oliphant, "Production of Natural Gas," Report of USGS, 1902.
10. "Fluid Flow, Pumps, Pipes and Channels" by N. Cheremisinoff, Ann Arbor Science, Ann Arbor, Michigan, 1981, p. 184.
11. Piping Handbook, Sabin Crocker, McGraw-Hill Publishing Co., Inc., 1945.
12. Mandhane, J.M., G.A. Gregory, and K. Aziz. "A Flow Pattern Map for Gas-Liquid Flow in Horizontal Pipes" Int. J. Multiphase Flow, Pergamon Press, Vol. 1, 1974, pp. 537-553.
13. Taitel, Yehuda, and A.E. Dukler. "A Model for Predicting Flow Regime Transitions in Horizontal and Near Horizontal Gas-Liquid Flow" AIChE Journal, Vol. 22, No. 1, Jan. 1976, pp. 47-55.
14. Aziz, K., G.W. Govier, and M. Fogarasi. "Pressure Drop in Wells Producing Oil and Gas" J. Cdn. Pet. Tech., July-Sept 1972, pp. 38-48.
15. Lockhart, R.W., and R.C. Martinelli, "Proposed Correlation of Data for Isothermal Two-Phase, Two-Component Flow in Pipes" Chemical Engineering Progress, Vol. 45, No. 1, January 1949, pp. 39-48.
16. Beggs, H. Dale, and James P. Brill. "A Study of Two-Phase Flow in Inclined Pipes" Trans. AIME, May 1973, pp. 606-617.
17. Orkiszewski, J. "Predicting Two-Phase Pressure Drops in Vertical Pipe" J. Pet. Tech, AIME, June 1967, pp. 829-838.
18. Baker, O., et al. "Gas-Liquid Flow in Pipelines, II. Design Manual" AGA-API Project NX-28, October 1970.
19. Dukler, A.E., Moye Wicks, III, and R.G. Cleveland. "Frictional Pressure Drop in Two-Phase Flow: B. An Approach through Similarity Analysis" AIChE Journal, Vol. 10, No. 1, January 1964, pp. 44-51.
20. Flanigan, Orin. "Effect of Uphill Flow on Pressure Drop in Design of Two-Phase Gathering Systems" Oil and Gas Journal, March 10, 1958, pp. 132-141.
21. Eaton, Ben A., et al. "The Prediction of Flow Patterns, Liquid Holdup and Pressure Losses Occurring During Continuous Two-Phase Flow in Horizontal Pipelines" J. Pet. Tech. AIME, June 1967, pp. 815-828.
22. Greskovich, Eugene J., and Adam L. Shrier. "Slug Frequency in Horizontal Gas-Liquid Slug Flow" Ind. Eng. Chem. Process Develop., Vol. 11, No. 2, 1972, pp. 3;17-318.
23. Brill, James P., et al. "Analysis of Two-Phase Tests in Large Diameter Prudhoe Bay Flowlines" SPE 8305, AIME, 1979.
24. Schmidt, Zelmir, and James P. Brill. "Experimental Study of Severe Slugging in a Two-Phase Flow Pipeline-Riser System" SPE 8306 AIME, 1979.
25. Cunliffe, R.S. "Condensate Flow in Wet Gas Lines can be predicted" Oil and Gas Journal, October 30, 1978, pp. 100-108.
26. McDonald, Alvis E., and Ovid Baker. "Multiphase Flow in Pipelines" Oil and Gas Journal, June 15, June 22, June 29, and July 6, 1964
27. Manual of Petroleum Measurement, Chapter 14.3, Orifice Metering of Natural Gas and Other Related Hydrocarbon Fluids, Second Edition, September, 1985 (AGA Report #3)(GPA 8185-85) (ANSI/API 2530).
28. Chemical Plant and Petroleum Refinery Piping, ANSI/ASME B31.3.
29. Gas Transmission and Distribution Piping Systems, ANSI/ASME B31.8.
30. Chen, N.H., "An Explicit Equation for Friction Factor in Pipe," Ind. Eng. Chem. Fund., 18(3), 296 (1979).

BIBLIOGRAPHY

1. R.W. Leach & W.P. Redmond, "How a Computer is Applied to a Specific Problem in Pipeline Design," Oil & Gas Journal, Flow Calculations in Pipelining, 1960.
2. Wilson, McAdams & Seltzer, "Flow of Fluids Through Commercial Pipelines," Journal of Industrial and Engineering Chemistry, February, 1922.
3. T.R. Aude, "Suggested Formula for Calculating Capacity of Products Pipe Lines," 1943.
4. Wilson & McAdams, "Contribution No. 19" from the Department of Chemical Engineering, Massachusetts Institute of Technology.
5. W.G. Heltzel, "Fluid Flow and Friction in Pipelines," Oil & Gas Journal, June 5, 1930.
6. T.R. Young, "Digital Simulation of Crude Oil Pipelines," API Pipeline report, May 2, 1960.

SECTION 18

Utilities

Well designed and functioning utilities are essential to reliable operation of gas processing plants. The extent of the utilities required for gas processing plants varies widely with the type of facility and process units involved in the project. Also, in many situations some of the utilities are provided by third parties or shared with other facilities.

Utility systems are covered broadly in this Section. Many of the equipment components and systems in utility systems are covered in other Sections of the Data Book. The following utility systems will be covered in this Section:

- Steam Systems
- Heat Medium Systems
- Instrument Air Systems
- Nitrogen Systems
- Fuel Systems
- Flare/Relief Systems
- Water Treating Systems
- Electrical Systems

In addition, general information on plant spacing and maintenance procedures is included in this Section.

FIG. 18-1

Nomenclature

A = ampere
AC = alternating current
BD = blowdown, gpm
DC = direct current
E = voltage, volts
eff = efficiency, percent
F = filtering rate, gpm
hp = horsepower
I = current, amperes
kV = kilovolt
kW = kilowatt
kVA = kilovolt-ampere
KVAr = reactive kilovolt-amperes, kilovar
N.C. = normally closed
N.O. = normally open
ppmw = part per million by weight
$\text{pAlk} = \log\left(\frac{1}{\text{ppmw of M alkalinity}}\right)$ (see Fig. 18-22)
$\text{pCa} = \log\left(\frac{1}{\text{ppmw of Ca}}\right)$ (see Fig. 18-22)
pH_S = calculated pH at saturation with calcium carbonate (see Fig. 18-22)
PF = power factor, decimal
R = resistance, ohms
SS_F = final suspended solids content, ppmw
SS_I = initial suspended solids content, ppmw
V = electromotive force, volts
W = watt
~ = frequency, Hertz
φ = symbol for phase, usually preceded by a number

Alkalinity: The acid neutralizing capacity of a water. It is usually expressed as "M" alkalinity (the methyl orange endpoint at a $\text{pH} \cong 4.3$) and "P" alkalinity (the phenolphthalein endpoint at a $\text{pH} \cong 8.3$).

Several ions contribute to alkalinity, but it is generally due to bicarbonate (HCO_3^{-1}), carbonate (CO_3^{-2}), and hydroxyl (OH^{-1}) ions.

Alkalinity and pH relationships: The alkalinity of naturally occurring waters is usually due to calcium and magnesium bicarbonate and occasionally to some sodium bicarbonate. Carbonate or hydroxide alkalinity is rarely encountered in raw waters.

"M" alkalinity = all bicarbonate + all carbonate + all hydroxide
"P" alkalinity = 1/2 carbonate + all hydroxide
If $2P < M$, hydroxide = 0
If $2P = M$, bicarbonate and hydroxide = 0
If $2P > M$, bicarbonate = 0
If $P = 0$, all alkalinity is bicarbonate
If $P = M$, all alkalinity is hydroxyl
M-2P = bicarbonate alkalinity
2P-M = hydroxide alkalinity

Ampacity: The continuous current-carrying capacity of electric conductors expressed in amperes under specific operating temperatures.

Biochemical Oxygen Demand (BOD): A measure of the oxygen consumed in the oxidation of organic and oxidizable inorganic materials in wastewater (expressed in ppm).

Blowdown: The removal of a portion of the water in a boiler or cooling water system to reduce concentrations of dissolved and/or suspended solids.

Bonding: The permanent joining of metallic parts to form an electrically conductive path which will assure electrical continuity and the capacity to conduct safely any current likely to be imposed.

FIG. 18-1 (Cont'd)

Nomenclature

Branch Circuit: The circiut conductors between the final overcurrent device protecting the circuit and the outlet(s).

Bus: A conductor, or group of conductors, that serve as a common connection for two or more circuits.

Cathodic Protection: A means of reducing or preventing corrosion of a metal by making it the cathode in a conducting medium by means of an impressed or galvanic direct electric current.

Caustic Embrittlement: A peculiar type of boiler corrosion characterized by cracking of the metal along the grain boundaries which may occur when highly stressed metal is exposed to concentrated boiler water. It is usually associated with high concentrations of sodium hydroxide.

Circuit Breaker: A device designed to open and close a circuit by nonautomatic means and to open the circuit automatically on a predetermined overcurrent without injury to itself when properly applied within its rating. The automatic opening means can be integral, direct acting with the circuit breaker, or remote from the circuit breaker.

Adjustable: A qualifying term indicating that the circuit breaker can be set to trip at various values of current and/or time within a predetermined range.

Instantaneous Trip: A qualifying term indicating that no delay is purposely introduced in the tripping action of the circuit breaker.

Inverse Time: A qualifying term indicating there is purposely introduced a delay in the tripping action of the circuit breaker, which delay decreases as the magnitude of the current increases.

Nonadjustable: A qualifying term indicating that the circuit breaker does not have any adjustment to alter the value of current at which it will trip or the time required for its operation.

Setting: (of Circuit Breaker) The value of current and/or time at which an adjustable circuit breaker is set to trip.

Conductivity: The ability of water to conduct an electrical current. As such, it is the opposite of resistivity and is related to the concentration of dissolved (ionizable) solids in the water. The measure of conductivity is conductance (the reciprocal of resistance) whose units are normally microhms equal to 1,000,000/ohms. The relationship between conductance and dissolved solids concentration will vary depending on the compounds present in the water as shown in Fig. 18-8. Temperature is also a factor and most conductivity meters provide for temperature compensation.

Conductor: A wire or combination of wires not insulated from one another, suitable for carrying a single electric current.

Continuous Load: A load where the maximum current is expected to continue for three hours or more.

Controller: A device or group of devices that serves to govern, in some predetermined manner, the electric power delivered to the apparatus to which it is connected.

Demand Factor: The ratio of the maximum demand of a system, or part of a system, to the total connected load of a system or the part of the system under consideration.

Duty:

Continuous Duty: Operation at a substantially constant load for an indefinitely long time.

Intermittent Duty: Operation for alternate intervals of (1) load and no load; or (2) load and rest; or (3) load, no load, and rest.

Non-plugging, Non-jogging Duty: The rate of operation shall not exceed five openings or closings per minute and shall be not more than 10 in a 10-minute period.

Periodic Duty: Intermittent operation in which the load conditions are regularly recurrent.

Plug-Stop, Plus-Reverse, and Jogging Duty: Require repeated interruption of stalled motor current or repeated closing of high transient currents encountered in rapid motor reversal.

Short-Time Duty: Operation at a substantially constant load for a short and definitely specified time.

Varying Duty: Operation at loads, and for intervals of time, both of which may be subject to wide variation.

Enclosure: The case or housing of apparatus, or the fence or walls surrounding an installation to prevent personnel from accidentally contacting energized parts, or to protect the equipment from physical damage. See text section "NEMA Enclosures."

Explosion-proof Apparatus: Apparatus enclosed in a case that is capable of withstanding an explosion of a specified gas or vapor which may occur within it and of preventing the ignition of a specified gas or vapor surrounding the enclosure by sparks, flashes, or explosion of the gas or vapor within, and which operates at such an external temperature that a surrounding flammable atmosphere will not be ignited thereby.

Feeder: All circuit conductors between the service equipment, or the generator switchboard of an isolated plant, and the final branch-circuit overcurrent device.

Fitting: An accessory such as a locknut, bushing, or other part of a wiring system that is intended primarily to perform a mechanical rather than an electrical function.

Flammable and Combustible Liquids: A flammable liquid is one that has a closed cup flash point below 100°F (38°C) and a vapor pressure not exceeding 40 psia (276 kPa) at 100°F (38°C). Combustible liquids have a closed cup flash point at or above 100°F (38°C).

Ground: A conducting connection, whether intentional or accidental, between an electrical circuit or equipment and the earth, or to some conducting body that serves in place of the earth.

Ground-Fault Circuit Interrupter: A device intended for the protection of personnel that functions to de-energize a circuit or portion thereof within an established period of time when a current to ground exceeds some predetermined value that is less than that required to operate the overcurrent protective device of the supply circuit.

FIG. 18-1 (Cont'd.)

Nomenclature

Ground Water: Water from wells and springs is classified as ground water. Ground waters are usually relatively free of suspended solids. The composition of a ground water usually remains fairly constant with time.

Hertz: The unit of frequency, one cycle per second.

Hardness: A property of water which is usually caused by the presence of calcium and magnesium ions. Hardness causes excessive soap consumption domestically and is the source of most scale formation in boiler and cooling water systems. Waters with up to 50 ppmw hardness (as $CaCO_3$) are considered soft; waters with more than 200 ppmw hardness (as $CaCO_3$) are considered hard. Carbonate hardness is usually due to calcium and magnesium bicarbonate; noncarbonate hardness is due to calcium and magnesium salts of sulfate, chloride, and nitrate.

Impedance: The equivalence of resistance in an alternating current circuit, consisting of the sum of orthogonal components of resistance and reactants, measured in ohms.

InSight From (Within Sight From, Within Sight): Where the NEC specifies that one equipment shall be "in sight from," "within sight from," or "within sight," etc., of another equipment, one of the equipments specified shall be visible and not more than 50 feet (15.24 m) distant from the other.

Interrupting Rating: The highest current at rated voltage that an overcurrent protective device is intended to interrupt under specified test conditions. Equipment intended to break current at other than fault levels may have its interrupting rating implied in other ratings, such as horsepower or locked rotor current.

Intrinsically Safe: Equipment and wiring that are incapable of releasing sufficient electrical energy under normal or abnormal conditions to cause ignition of a specific hazardous atmospheric mixture in its most easily ignited concentration.

Ions, Anions, Cations: Electrically charged atoms or groups of atoms. In electrolysis, the negatively charged ions (anions, containing an excess of electrons denoted by minus signs such as Cl^{-1}, SO_4^{-2}) move toward the anode while the positively charged ions (cations, deficient in electrons denoted by plus signs such as Na^{+1}, Ca^{+2}) move toward the cathode.

Langelier Scaling Index (LSI), Ryznar Scaling Index (RSI): Empirical indices often used to predict the tendency of cooling water to form scale (Fig. 18-22).

LSI = $pH - pH_S$

RSI = $2pH_S - pH$

pH = a measurement of the acidity or alkalinity of a system. The reference temperature for pH is 25°C (77°F) and the pH scale runs from 0 (highly acidic) to 14 (highly basic) with pH = 7.0 being neutral.

Motor-Circuit Switch: A switch, rated in horsepower, capable of interrupting the maximum operating overload current of a motor of the same horsepower rating as the switch at the rated voltage.

Motor Control Center: Motor Control Centers consist of a mechanical grouping of combination motor control, feeders, or other units arranged in a convenient assembly. They may or may not include interwiring or interlocking between units or to remotely mounted devices.

Outlet: A point of the wiring system at which current is taken to supply utilization equipment.

Overcurrent: Any current in excess of the rated current of equipment or the ampacity of a conductor. It may result from overload (see definition), starting, short circuit, or ground fault. A current in excess of rating may be accommodated by certain equipment and conductors for a given set of conditions. Hence, the rules for overcurrent protection are specific for particular situations.

Overload: Operation of equipment in excess of normal, full-load rating, or of a conductor in excess of rated ampacity which, when it persists for a sufficient length of time, would cause damage or dangerous overheating. A fault, wuch as a short circuit or ground fault, is not an overload. (See "Overcurrent").

Panelboard: A single panel or group of panel units designed for assembly in the form of a single panel; including buses, automatic overcurrent devices, and with or without switches for the control of light, heat, or power circuits; designed to be placed in a cabinet or cutout box placed in or against a wall or partition and accessible only from the front. (See "Switchboard").

Power Factor: Ratio of total watts to the total root-mean-square volt-amperes.

Raceway: An enclosed channel designed expressly for holding wires, cables, or busbars, with additional functions as permitted in the NEC. Raceways may be of metal or insulating material, and the term includes rigid metal conduit, rigid nonmetallic conduit, intermediate metal conduit, liquid-tight flexible metal conduit, electrical metallic tubing, underfloor raceways, cellular concrete floor raceways, cellular metal floor raceways, surface raceways, wireways, and busways.

Receptacle: A receptacle is a contact device installed at the outlet for the connection of a single attachment plug. A single receptacle is a single device on the same yoke. A multiple receptacle is a single contact device containing two or more receptacles.

Remote-Control Circuit: Any electric circuit that controls any other circuit through a relay or an equivalent device.

Service Drop: The overhead service conductors from the last pole or other aerial support to and including the splices, if any, connecting to the service-entrance conductors at the building or other structure.

Service Equipment: The necessary equipment, usually consisting of a circuit breaker or switch and fuses, and their accessories, located near the point of entrance of supply conductors to a building or other structure, or an otherwise defined area, and intended to constitute the main control and means of cutoff of the supply.

FIG. 18-1 (Cont'd.)

Nomenclature

Short Circuit: A connection of comparatively low resistance accidentally or intentionally made between points on a circuit between which the resistance is normally much greater.

Solids (suspended, dissolved, total): Suspended solids are those which can be removed by filtration. Dissolved solids are in true solution, while total solids are the sum of the suspended and dissolved solids. Usually expressed in ppmw or mg/liter.

Surface Water: Water from lakes and streams is considered to be surface water. The composition of surface waters tends to vary widely with time.

Synchronism: The state where connected alternating-current systems, machines, or a combination operating at the same frequency and where the phase-angle displacements between voltages in them are constant, or vary about a steady and stable average value.

Synchronous Speed: Speed of rotation of the magnetic flux, produced by or linking the primary winding.

Switchboard: A large single panel, frame, or assembly of panels on which are mounted, on the face or back or both, switches, overcurrent and other protective devices, buses, and usually instruments. Switchboards are generally accessible from the rear as well as from the front and are not intended to be installed in cabinets. (See "Panelboard").

Switchgear: A form of switchboard in which all the equipment required to control an individual circuit, including bus, circuit breaker, disconnecting devices, current and potential transformers, controls, instruments, and relays, is assembled in one metal cubicle and the circuit breaker is provided with means for ready removal from the cubicle. Circuit breakers can be of the oil or air type, although the trend is strongly to the use of air circuit breakers.

Thermal Cutout: An overcurrent protective device that contains a heater element in addition to and affecting a renewable fusible member which opens the circuit. It is not designed to interrupt short-circuit currents.

Thermal Protector: (As applied to motors) A protective device for assembly as an integral part of a motor or motor-compressor and which, when properly applied, protects the motor against dangerous overheating due to overload and failure to start.

Voltage (of a Circuit): The greatest root-mean-square (effective) difference of potential between any two conductors of the current concerned. Some systems, such as 3-phase 4-wire, single-phase 3-wire, and 3-wire direct-current may have various circuits of various voltages.

Voltage, Norminal: A nominal value, assigned to a circuit or system for the purpose of conveniently designating its voltage class (as 120/240, 480Y/277,600, etc.). The actual voltage at which a circuit operates can vary from the nominal within a range that permits satisfactory operation of equipment.

Voltage to Ground: For grounded circuits, the voltage between the given conductor and that point or conductor of the circuit that is grounded; for ungrounded circuits, the greatest voltage between the given conductor and any other conductor of the circuit.

Useful Conversion and Equivalence Factors

	Parts per Million (ppmw)	Grains per Gallon	Grams per Liter	Milligrams per Liter	Wt%
1 part per million by weight	1.0	0.0584	0.001	1.0	0.0001
1 grain per gallon	17.1	1.000	0.017	17.1	0.0017
1 gram per liter	1000	58.4	1.0	1000	0.1
1 milligram per liter	1.0	0.058	0.001	1.0	0.0001
1 percent (wt)	10000	584	10.0	10000	1.0

1 cu ft water @ 60°F = 62.37 lbs = 7.481 gal.
1 gal. = 231 cu in. = 0.1337 cu ft
1 lb water = 27.741 cu in. @ 60°F
1 lb water = 0.1201 gal. @ 60°F

STEAM SYSTEMS

Steam generation can be accomplished with stand alone boilers or by utilizing gas turbine exhaust waste heat recovery. The steam requirements may be low pressure process steam such as is needed for amine unit reboilers or fractionator reboilers. These systems are easily developed with standard equipment.

More complex systems are used which generate high pressure steam for driving steam turbines as well as providing process steam needs. Fig. 18-2 shows an example integrated steam system. Information on steam turbine drivers can be found in Section 15 of this Data Book.

Information to enable calculations on steam systems can be found in the steam tables in Section 24.

Steam systems are also integrated into sulfur recovery units to handle the waste heat generated by the sulfur unit and aid in controlling the overall system. Examples of how steam generation is integrated into sulfur recovery units can be found in Section 22.

Proper water treating for steam system makeup is critical to the successful operation of a steam system. Information on water treating can be found in the Water Treating subsection of this Section. Also, information on handling boiler blowdown can also be found in this Section.

HEAT MEDIUM SYSTEMS

Heat medium systems, like steam systems are used to provide process heat needs in varoius units of gas processing plants. Heat medium systems have become popular in lieu of steam systems due to the elimination of makeup water treatment and handling of waste water. This may be important for environmental reasons as well as in areas where water makeup supply is problematic.

There are a number of heat transfer fluids which are used in the industry. Generally, the heat transfer fluids used in gas processing facilities are liquid phase. Fig. 18-3 provides data on some commercially available fluids.

Section 8 of this Data Book contains information on Fired Heaters and a discussion of heat medium systems.

One important design issue with the use of heat transfer fluids is in amine reboilers. Care must be taken to limit the film temperature in the reboiler to avoid amine degradation. A temperature approach of 75°F maximum is recommended.

FIG. 18-2

Example Integrated Steam System

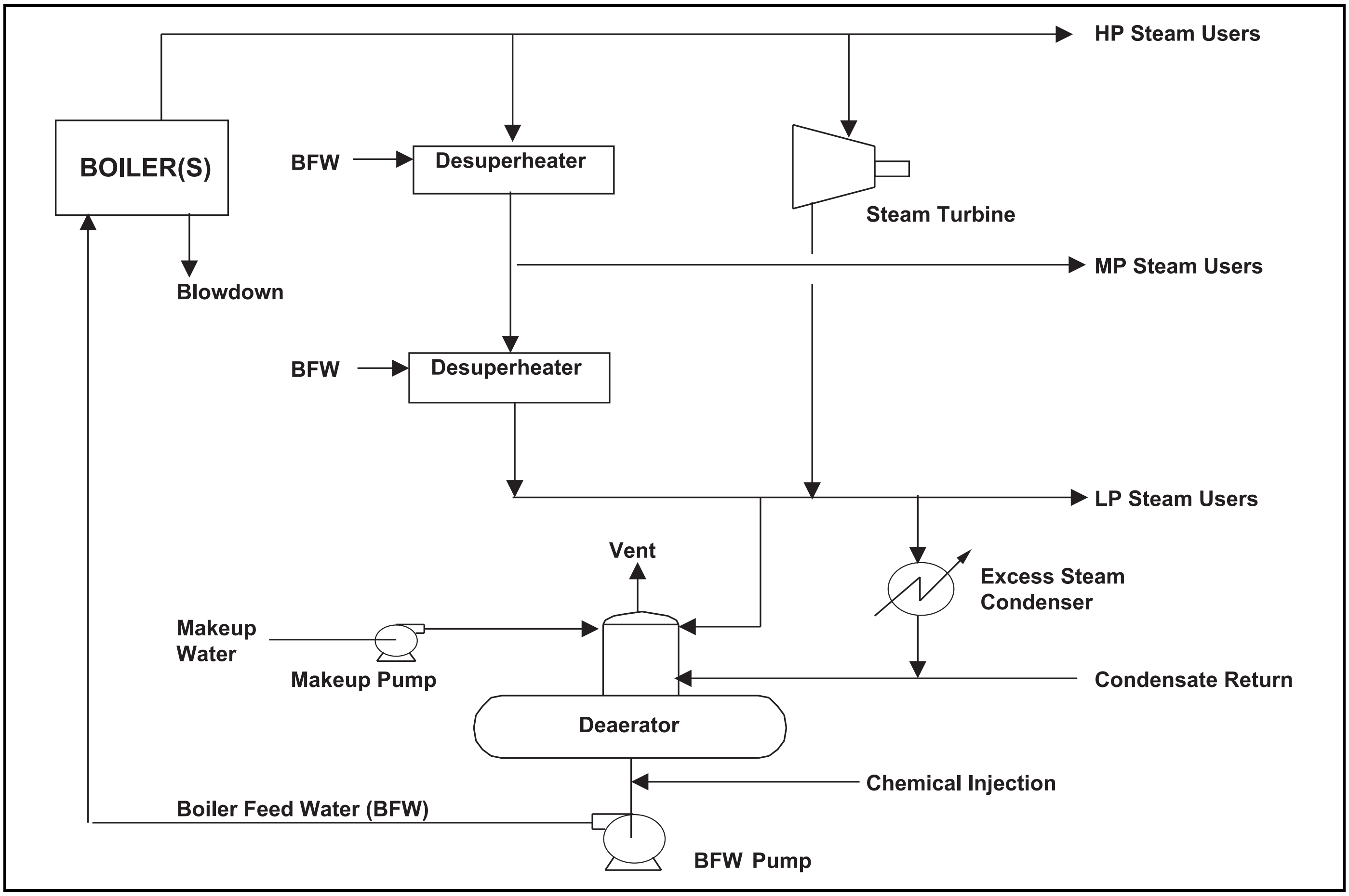

FIG. 18-3

Properties of Heat Transfer Fluids

Supplier	Trade Name	Product	Composition	Temperature Range (F)	Flash Point (F)	Fire Point (F)	Vapor Pressure Autoignition	
							Temp. (F)	At (temp) psia
DOW CHEMICAL	Dowtherm	A	Diphenyll oxide and biphenyl	60-750	236		1139	152 @ 750
		G	Di-, tri-aryl ethers	20-680	266		1083	49.1 @ 680
		J	Alkylated aromatic	-100 to 600	136		788	175 @ 600
		HT	Partially hydrogenated terphenyl	25-650	342		662	14.2 @ 650
		Q	Diphenylethane and alkylated aromatics	-30 to 625	249		773	48.1 @ 625
		RP	Diaryl Alkyl	30 to 660	381		725	13.6 @ 660
		MX	Alkylated aromatics	-10 to 625	329		788	15.1 @ 625
		T	C14 to C30 Alkyl Benzene Derivatives	14 to 550	370		707	2.6 @ 550
		SR-I	Inhibited ethylene glycol	-34 to 250	N/A	N/A	N/A	
		4000	Inhibited ethylene glycol	-34 to 350	N/A	N/A	N/A	
	Syltherm	800	Polydimethyl siloxane	-40 to 750	320		725	197 @ 750
		XLT	Polycimethyl siloxane	-150 to 500	116		662	75.5 @ 500
		HF	Polydimethyl siloxane	-100 to 500	145		671	39.8 @ 500
	Dowfrost		Inhibited propylene glycol	-28 to 250	N/A	N/A	N/A	
		HD	Inhibited propylene glycol	-28 to 350	N/A	N/A	N/A	
	Dowcal	10	Inhibited ethylene glycol	-34 to 350	N/A	N/A	N/A	
		20	Inhibited propylene glycol	-28 to 325				
		N	Inhibited propylene glycol	-18 to 250				
SASOL	Marlotherm	X	Diethyl benzene	-94 to 572	133		770	158 @ 572
		LH	Benzyl toluene	32-680	266		842	70@ 680
		SH	Dibenzyl toluene	158-662	392		842	12.5 @ 680
		N	Alkyl benzene	140-572	356		626	3.4 @ 572
		FP						
SOLUTIA	Therminol	LT	Alkyl substituted aromatic	-100 to 358	134	150	805	228 @ 600
		D-12	Synthetic hydrocarbon mixture	-120 to 500	138	160	531	57.4 @ 500
		FS	Inhibited propylene glycol in H20	-50 to 250	N/A	N/A	N/A	104 @ 200
		XP	White mineral oil	0-600	360	385	615	6.1 @ 600
		55	Synthetic hydrocarbon mixture	15-500	380	420	690	7 @ 600
		59	Alkyl substituted aromatic	-50 to 600	295	310	760	23.6 @ 600
		66	Modified terphenyl	30-650	375	420	750	11 @ 650
		VP-1	Diphenyl oxide and biphenyl	54-750	255	260	1150	156 @ 750
		VP-3	Phenylcyclohexane and bicyclohexyl	36 to 625	219	235	663	99.4 @ 625
PARA-THERM		HE	Paraffinic hydrocarbon	150-600	440	500	700	0.87 @ 600
		NF	Hydrotreated hydrocarbon	120-600	345	385	690	4.7 @ 600
		MR	Paraffinic hydrocarbon	30 to 550	300	325	621	3.2 @ 550
		OR	Hydrotreated hydrocarbon	175 to 550	350	395	630	0.95 @ 500
RADCO	Xceltherm	MKI	Diphenyl oxide and biphenyl	60 to 750	255	265	1150	435 @ 750
		XT	Alkyl aromatic	-70 to 650	275	283	803	61 @ 650
		500	Polyalphaolefin	-80 to 500	325	350	625	5.2 @ 500
		550	Mineral oil	-9 to 550	350	380	640	1.5 @ 550
		600	White oil	-4 to 600	380	420	680	3.6 @ 600
		HT	Alkyl aromatic	-35 to 660	417	425	842	5.9 @ 660
		LV1	Diphenylethan and	45 to 700	251	263	1120	419 @ 700
		LV2	Dipheyl	32 to 675	255	267	1120	416 @ 650
		LV3	Oxide (All LV's)	-35 to 650	266	278	1120	436 @ 650
		445FP	Parafinnic blend	5 to 550	445	480	715	1.5 @ 550

INSTRUMENT AIR

Instrument air systems are critical to the proper operation of gas processing facilities since all the instruments and controls depend on dry, pressurized instrument air for operation. A typical instrument air system is shown in Fig. 18-4. Most systems are designed with 100% (or more) backup in the air compressor systems. Systems are generally designed to provide 100 psig air pressure for users. While most instrumentation components do not require this high pressure, often large valves with rapid closure requirements need this pressure to operate properly.

Drying of the instrument air is critical to prevent fouling and possible freezing in the air system and instruments. A –40°F dew point specification is common but specifications vary according to the climatic conditions of the site. Drying is usually accomplished with activated alumina or molecular sieve fixed bed driers similar to natural gas dehydrators (see Section 20). Heated regeneration similar to that shown in Section 20 is often used. The second type of regeneration is the "heatless" regeneration. In this system the beds are regenerated by depressuring the bed and using some of the dry air to drive off the water. The "wet" air is vented. Instrument air is also sometimes dried by using refrigeration to chill the air and condense out the water. The air is then reheated to ambient user conditions.

A number of different style compressors are used for instrument air systems. Since the air is needed at 100 psig, the compression ratio is over 7.5. If reciprocating compressors are used, multiple stages are necessary. Screw compressors (both oil flooded and oil free) are the most widely used style of compressors in this service (See Section 13).

In large gas processing facilities, multiple instrument air receivers may be used at multiple locations in the plant. In this way sufficient air volume can be provided near to large users of air without pulling down the system pressure.

NITROGEN SYSTEMS

Most gas processing facilities benefit from having an onsite source of nitrogen for purging seals in rotating equipment, purging air from equipment and components and for other uses such as blanketing. Fig. 18-5 lists flammability characteristics of common gases and liquids and the threshold levels of oxygen above which explosion could occur.

Consideration of this data is necessary when considering the use, sizing and purity of the nitrogen being generated.

For facilities near industrial areas, it is often economical to have a nitrogen tank and vaporizer on site which is refilled by a third party nitrogen supplier. The nitrogen is then resupplied as needed.

In remote facilities or in facilities which require larger volumes (such as LNG facilities), onsite generation is often necessary. Nitrogen can be generated from a number of different processes such as pressure swing adsorption (PSA), membranes separation, or cryogenic separation.

Selection of the process is dependent on the purity of nitrogen required, the expected usage rate, and the variability of the nitrogen needs. PSA and membrane units can produce nitrogen from 95% to 99.9% purity in standard unit sizes up to about 100,000 scfh. Water dewpoints of –70 to –90°F are achievable. Nitrogen produced cryogenically usually has a residual oxygen content of less than 20 ppm (99.998% purity).

FIG. 18-4

Example Instrument Air System

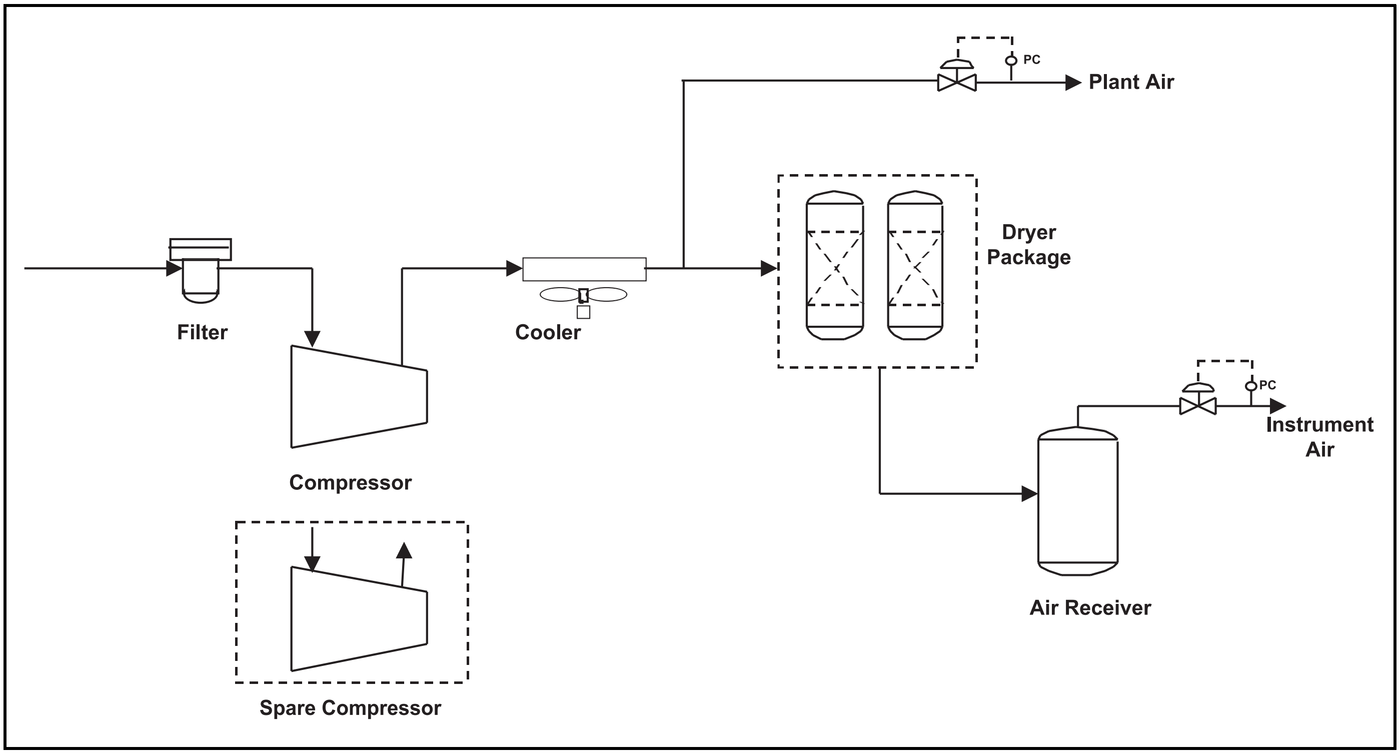

FIG. 18-5

Flammability Characteristics of Gases and Liquids

Product	Boiling Point Temperature °F (1)	Flashpoint °F (2)	Autoignition Temperature °F (3)	Flammability Limit in Air Vol. % (4)		Maximum Oxygen Content Vol. % (5)
				Lean (LEL)	Rich (UEL)	
Acetylene	-119	–	571	1.5	100	–
Ammonia	-28	–	1,204	15.5	27	15
Benzene	176	12	1,044	1.2 (at 212-F)	8	11.20
1,3-Butadiene	24	–	804	2	12.5	10.40
Butane	31	–	761	1.5	9	12.10
1-Butene	21	–	723	1.60	10	11.40
2-butene	34	–	615	1.6	10	11.70
Carbon disulfide	115	-22	212	1.30	44	5.40
Carbon monoxide	-313	–	1,128	12.50	74	5.60
Cyclopropone	-27.4	–	928	2.40	10.40	11.70
2, 2-Dimethylbutane	121	-54	797	1.20	7	12.10
Ethane	-127	–	959	2.9	13	11
Ethanol	173	-55	793	3.3	19	10.60
Ethylene	-155	–	842	2.7	36	10
Gasoline	–	-49	996	1.40	7	–
Gasoline (octane 60)	–	-45	536	1.40	7.60	11.60
Gasoline (octane 92)	–	–	734	1.50	7.60	11.60
Gasoline (octane 100)	–	-36	853	1.40	7.40	11.60
Heptane	209	25	433	1	7	11.60
Hexane	156.20	7	453	1.1	7.7	11.90
Hydrogen	-423	–	1,085	4	74.2	5
Isobutane	11	–	864	1.80	8.5	12
Isopropanol	179.60	70	860	2	12	12
Methane	-259	–	999	5	15	12.10
Methanol	148	52	867	5.5	44	9.70
Methyl butene	87.4	<20	–	–	–	11.40
N-butanol	244.40	95	649	1.40	11.20	11.30
Pentane	97	<-40	588	1.4	8.3	12.10
Propane	-44	–	871	2	9.5	11.40
Propylene	-54.4	–	770	2	11.7	11.50
Toluene	231	39.20	996	1.2	7.1	9.10
Xylene	282	85	867	1	7	8

1. Boiling point temperature at standard atmospheric pressure
2. Flashpoint is the minimum temperature at which vapors of a combustible liquid will be ignited by a flame in certain experimental conditions
3. Autoignition temperature is the minimum temperature at which a product will spontaneously oxidize in air
4. Flammability limit is the volume percentage of combustible gas in air such that below the lean limit (LEL) or above the rich limit (UEL), the mixture is considered nonflammable
5. Maximum oxygen content is the oxygen percentage in a combustible gas mixture below which the mixture is non-flammable

Water content is essentially zero as the nitrogen has been processed at around –300°F. The cryogenic process also has the ability to produce liquid and vapor. Many units in remote locations produce vapor for daily use and some liquid which can be stored as a backup supply. An example cryogenic nitrogen production system is shown in Fig. 18-6.

FUEL SYSTEMS

Fuel systems in gas processing facilities are necessary to provide the proper fuel for a variety of users in the plant. Low pressure users are items such as boilers, fired heaters and reciprocating engines. Higher pressure users are gas turbines. All fuel systems need to be kept free of solid contaminants which can plug instrumentation and fuel nozzles. In addition, fuel streams need to be maintained above the hydrocarbon dewpoint to prevent any liquid slugs in the fuel users.

Gas turbines require more rigorous fuel specifications than do lower pressure systems. Fig. 18-7 shows an example fuel gas specification for a commercial gas turbine. Specifications for a particular turbine can be obtained from the manufacturer.

(1) The turbines can be designed to handle higher or lower values of LHV but are designed for a particular range by the vendor.

(2) Feed gas pressure is entirely dependent on the type of turbine used. Most smaller turbines and industrial turbines require 300 to 400 psia. Large aeroderivative tur-

FIG. 18-6

Example Air Separation Plant

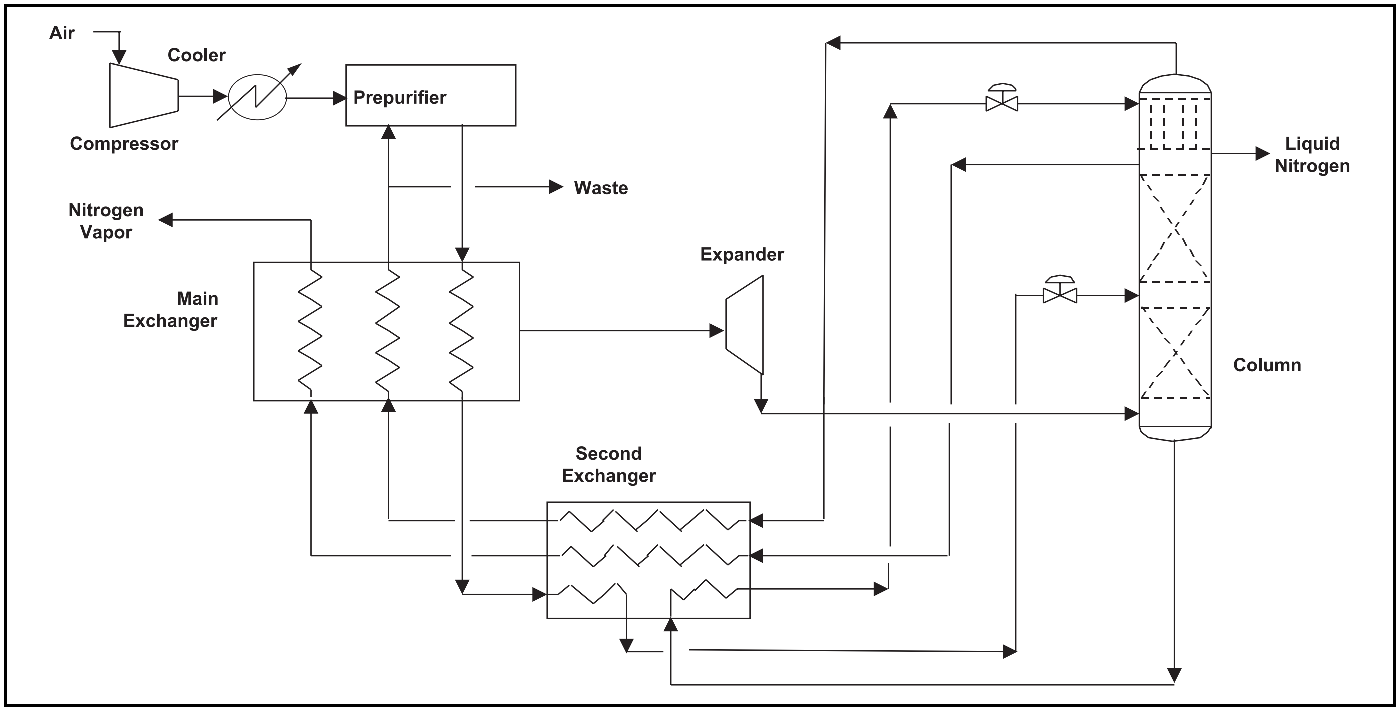

bines can require fuel in the 600 psia range. Fuel systems are usually designed to provide fuel at 100 psi greater than the compressor exit pressure of the turbine.

(3) Virtually all turbine manufacturers require 30-50ºF of superheat in the fuel stream.

The superheating of the gas can be accomplished in several ways. One way is simply to heat the feed stream directly. If the fuel is compressed before entering the fuel header, the temperature of the gas from the discharge cooler can be controlled to ensure proper superheat.

If the fuel is supplied from a higher pressure system by pressure let down, the stream often needs some processing to prevent condensation. This can be provided by chilling the stream, scrubbing and then reheating. Fuel gas conditioning systems based on Low Temperature Separation schemes are commercially available to accomplish this fuel conditioning.

FLARE/RELIEF SYSTEMS

Flare systems are needed in most gas processing facilities to safely dispose of waste gas streams and often are used to collect and dispose of discharges from safety relief systems. Design of these systems is covered in depth in API RP 520 and API RP 521 and in this Data Book in Section 5.

FIG. 18-7

Example Turbine Fuel Gas Specifications

	Maximum	Minimum
Lower Heating Value, Btu/SCF (1)	1200	900
Fuel Pressure, psia (2)	375	275
Supply Temperature, (3)	200ºF	41ºF or 36ºF above hydrocarbon dewpoint whichever is greater
Liquid Hydrocarbons/Dust, ppmw	20	
Liquid Droplet Size, microns	5	
Dust Particle Size, microns	10	
Water	No Free Water	
Sodium Content, ppmw	1	

WATER TREATING

Water treating requirements for gas processing plants depend upon (1) the quality of the source or makeup water, (2) the manner in which the water is used, (3) environmental regulations, and (4) site climatic conditions governing wastewater disposal. These factors should be considered in selecting the overall plant process and utility systems. Many gas processing plants, especially smaller plants, are designed "water free", utilizing air for all cooling services, a heating medium for process heat requirements, and electric motor drivers. Such plants have essentially no makeup water requirements and wastewater treatment requirements are minimized.

Source Waters

Source or makeup water is normally either ground water or surface water, neither of which is ever chemically pure. Ground waters contain dissolved inorganic impurities which came from the rock and sand strata through which the water passed. Surface waters often contain silt particles in suspension (suspended solids) and dissolved organic matter in addition to dissolved inorganic impurities (dissolved solids). Fig. 18-8 lists some of the common properties or characteristics and the normal constituents of water, together with corresponding associated operating difficulties and potential methods of water treatment.

Water Analysis

Water analyses are conventionally expressed, for both cations and anions, in parts per million by weight (ppmw) except for hardness and alkalinity which are usually expressed in ppmw of calcium carbonate ($CaCO_3$). These ppmw values can be converted to a common basis (such as milli-equivalents/liter) by dividing by the equivalent weight of the ion and multiplying by the specific gravity of the water solution. This permits the summation of oppositely-charged ions such that total cations will then equal total anions. Cation and anion concentrations in milli-equivalents/liter can be converted to ppmw $CaCO_3$ by multiplying by the equivalent weight of $CaCO_3$ ($100.08/2 = 50.04$) and dividing by the specific gravity of the water solution.

Example 18-1 — Water analysis calculation

Water Analysis Ion	ppmw	MW	Equivalent Weight
Calcium (Ca^{+2})	100.1	40.08	$\frac{40.08}{2} = 20.04$
Magnesium (Mg^{+2})	20.4	24.32	$\frac{24.32}{2} = 12.16$
Sodium (Na^{+1})	12.0	23.00	$\frac{23.0}{1} = 23.0$
Bicarbonate ($HCO3^{-1}$)	366.0	61.02	$\frac{61.02}{1} = 61.02$
Sulfate (SO_4^{-2})	48.1	96.06	$\frac{96.06}{2} = 48.03$
Chloride (Cl^{-1})	7.1	35.46	$\frac{35.46}{1} = 35.46$

	Cations	
Ion	Milli-equivalents/ liter (Sp Gr = 1.0)	ppmw $CaCO_3$
Ca^{+2}	100.1/20.04 = 5.00	(5.0) (50.04) = 250
Mg^{+2}	20.4/12.16 = 1.68	(1.68) (50.04) = 84
Na^{+1}	12.0/23 = 0.52	(0.52) (50.04) = 26
$HCO3^{-1}$	—	—
SO_4^{-2}	—	—
Cl^{-1}	—	—
Totals	7.20	360

	Anions	
Ion	Milli-equivalents / liter (Sp Gr = 1.0)	ppmw $CaCO_3$
Ca^{+2}	—	—
Mg^{+2}	—	—
Na^{+1}	—	—
$HCO3^{-1}$	366/61.02 = 6.00	(6) (50.04) = 300
SO_4^{-2}	48.1/48.03 = 1.00	(1.0) (50.04) = 50
Cl^{-1}	7.1/35.46 = 0.20	(0.20) (50.04) = 10
Totals	7.20	360

Total hardness is the sum of calcium and magnesium and is therefore equal to 334 ppmw as $CaCO_3$ (250 + 84). Correspondingly, alkalinity is the sum of CO_3^{-2}, HCO_3^{-1}, and OH^{-1} ions and is equal to 300 ppmw as $CaCO_3$.

Boiler Water Systems

Water treatment is employed to prevent or minimize:

- Scaling of boiler heat transfer surfaces by salts of hardness ions, by silica and/or by metallic oxides.
- Boiler corrosion by oxygen, water or acids, and of the steam/condensate system by oxygen or carbon dioxide.
- Carryover from the boiler because of foaming.
- Caustic embrittlement.

Boiler Water Chemistry

There are four types of impurities of concern in water to be used for the generation of steam:

- Scale-forming solids which are usually the salts of calcium and magnesium along with boiler corrosion products. Silica, manganese, and iron can also form scale.
- The much more soluble sodium salts (see Fig. 18-9) which do not normally form scale, but can concentrate under scale deposits to enhance corrosion or in the boiler water to increase carryover due to boiler water foaming.
- Dissolved gases, such as oxygen and carbon dioxide, which can cause corrosion.
- Silica, which can volatilize with the steam in sufficient concentrations to deposit in steam turbines.

Boiler Blowdown

Blowdown is employed to maintain boiler water dissolved solids at an appropriate level of concentration. At equilibrium, the quantities of dissolved solids removed by blowdown exactly equals those introduced with the feedwater plus any in-

FIG. 18-8

Water Impurities and Characteristic Treatment

Constituent	Chemical Formula	Difficulties Caused	Means of Treatment
Turbidity	None, usually expressed in Jackson Turbidity Units	Imparts unsightly appearance to water; deposits in water lines, process equipment, boilers, etc.; interferes with most process uses.	Coagulation, settling, and filtration
Color	None	Decaying organic material and metallic ions causing color may cause foaming in boilers; hinders precipitation methods such as iron removal, hot phosphate softening; can stain product in process use	Coagulation, filtration, chlorination, adsorption by activated carbon.
Hardness	Calcium, magnesium, barium, and strontium salts expressed as $CaCO_3$	Chief source of scale in heat exchange equipment, boilers, pipe lines, etc.; forms curds with soap; interferes with dyeing, etc.	Softening, distillation, internal boiler water treatment, surface active agents, reverse osmosis, electrodialysis
Alkalinity	Bicarbonate (HCO_3^{-1}), carbonate (CO_3^{-2}), and hydroxyl (OH^{-1}), expressed as $CaCO_3$	Foaming and carryover of solids with steam; embrittlement of boiler steel; bicarbonate and carbonate produce CO_2 in steam, a source of corrosion	Lime and lime-soda softening, acid treatment, hydrogen zeolite softening, demineralization, dealkalization by anion exchange, distillation, degasifying
Free Mineral Acid	H_2SO_4, HCl, etc. expressed as $CaCO_3$, titrated to methyl orange end-point.	Corrosion	Neutralization with alkalies
Carbon Dioxide	CO_2	Corrosion in water lines and particularly steam and condensate lines	Aeration, deaeration, neutralization with alkalies, filming and neutralizing amines
pH	Hydrogen Ion concentration defined as $\text{pH} = \log \frac{1}{(H^{+1})}$	pH varies according to acidic or alkaline solids in water; most natural waters have a pH of 6.0-8.0	pH can be increased by alkalies and decreased by acids
Sulfate	$(SO_4)^{-2}$	Adds to solids content of water, but, in itself, is not usually significant; combines with calcium to form calcium sulfate scale	Demineralization, distillation, reverse osmosis, electrodialysis
Chloride	Cl^{-1}	Adds to solids content and increases corrosive character of water	Demineralization, distillation, reverse osmosis, electrodialysis
Nitrate	$(NO_3)^{-1}$	Adds to solid content, but is not usually significant industrially; useful for control of boiler metal embrittlement	Demineralization, distillation, reverse osmosis, electrodialysis
Fluoride	F^{-1}	Not usually significant industrially	Adsorption with magnesium hydroxide, calcium phosphate, or bone black; alum coagulation; reverse osmosis; electrodialysis
Silica	SiO_2	Scale in boilers and cooling water systems; insoluble turbine blade deposits due to silica vaporization	Hot process removal with magnesium salts; adsorption by highly basic anion exchange resins, in conjunction with demineralization; distillation
Iron	Fe^{+2} (ferrous) Fe^{+3} (ferric)	Discolors water on precipitation; source of deposits in water lines, boilers, etc.; interferes with dyeing, tanning, paper mfr., etc.	Aeration, coagulation, and filtration, lime softening, cation exchange, contact filtration, surface active agents for iron retention
Manganese	Mn^{+2}	same as iron	same as iron
Oil	Expressed as oil or chloroform extractable matter, ppmw	Scale, sludge and foaming in boilers; impedes heat exchange; undesirable in most processes	Baffle separators, strainers, coagulation and filtration, diatomaceous earth filtration
Oxygen	O_2	Corrosion of water lines, heat exchange equipment, boilers, return lines, etc.	Deaeration, sodium sulfite, corrosion inhibitors, hydrazine or suitable substitutes
Hydrogen Sulfide	H_2S	Cause of "rotten egg" odor; corrosion	Aeration, chlorination, highly basic anion exchange
Ammonia	NH_3	Corrosion of copper and zinc alloys by formation of complex soluble ion	Cation exchange with hydrogen zeolite, chlorination, deaeration, mixed-bed demineralization
Conductivity	Expressed as microhms, specific conductance	Conductivity is the result of ionizable solids in solution; high conductivity can increase the corrosive characteristics of a water	Any process which decreases dissolved solids content will decrease conductivity; examples are demineralization, lime softening
Dissolved Solids	None	"Dissolved solids" is measure of total amount of dissolved matter, determined by evaporation; high concentrations of dissolved solids are objectionable because of process interference and as a cause of foaming in boilers	Various softening process, such as lime softening and cation exchange by hydrogen zeolite, will reduce dissolved solids; demineralization; distillation; reverse osmosis; electrodialysis
Suspended Solids	None	"Suspended solids" is the measure of undissolved matter, determined gravimetrically; suspended solids plug lines, cause deposits in heat exchange equipment, boilers, etc.	Subsidence, filtration, usually preceded by coagulation and setting
Total Solids	None	"Total solids" is the sum of dissolved and suspended solids, determined gravimetrically	See "Dissolved Solids" and "Suspended Solids"

jected chemicals, Fig. 18-10. The concentration of feedwater solids and the acceptable level of boiler water solids concentration determine the blowdown rate.

FIG. 18-9

Solubility of Some Common Compounds in Water (in ppmw as $CaCO_3$)

	32°F	212°F
Calcium		
Bicarbonate	1,620	Decomposes
Carbonate	15	13
Sulfate	1,290	1,250
Magnesium		
Bicarbonate	37,100	Decomposes
Carbonate	101	75
Sulfate	170,000	356,000
Sodium		
Bicarbonate	38,700	Decomposes
Carbonate	61,400	290,000
Chloride	225,000	243,000
Hydroxide	370,000	970,000
Sulfate	33,600	210,000

General Rules

1. Hardness salts tend to: decrease in solubility as temperature rises; decrease in solubility as alkalinity increases; increase in solubility as carbon dioxide increases.
2. Sodium salts tend to increase in solubility as temperature rises.
3. Silica (SiO_2) solubility increases with increased alkalinity.
4. Iron and manganese solubilities decrease with increased alkalinity.

FIG. 18-10

Example Showing How Boiler Water Solids are Controlled by Blowdown

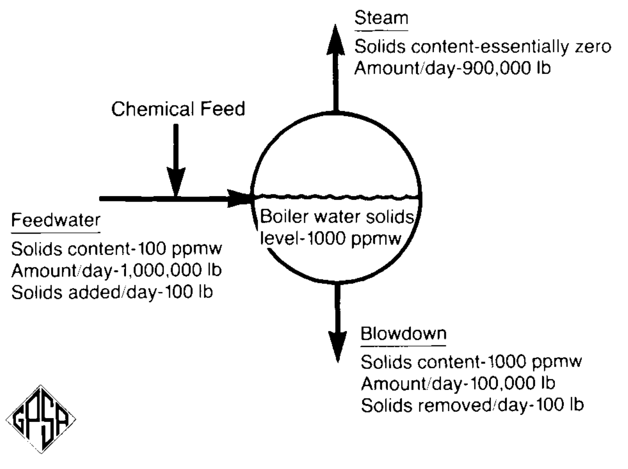

ABMA and ASME Standards

The American Boiler Manufacturers' Association (ABMA) and the American Society of Mechanical Engineers (ASME) have developed suggested limits for boiler water composition which depend upon the type of boiler and the boiler operating pressure. These control limits for boiler water solids are based upon one or more of the following factors:

- Sludge and Total Suspended Solids — These result from the precipitation in the boiler of feedwater hardness constituents due to heat and to interaction of treatment chemicals, and from corrosion products in the feedwater. They can contribute to boiler tube deposits and enhance foaming characteristics, leading to increased carryover.
- Total Dissolved Solids — These consist of all salts naturally present in the feedwater, of soluble silica, and of any chemical treatment added. Dissolved solids do not normally contribute to scale formation but excessively high concentrations can cause foaming and carryover or can enhance "under deposit" boiler tube corrosion.
- Silica — This may be the blowdown controlling factor in softened waters containing high silica. High boiler water silica content can result in silica vaporization with the steam, and under certain circumstances, siliceous scale. This is illustrated by Fig. 18-11 and by Example 18-2. Silica content of the boiler water is not as critical for steam systems without steam turbines.
- Iron — Occasionally in high pressure boilers where the iron content is high in relation to total solids, blowdown may be based upon controlling iron concentrations. High concentrations of suspended iron in boiler water can produce serious boiler deposit problems and are often indications of potentially serious corrosion in the steam/steam condensate systems.

Example 18-2 — A 400 psig boiler operating with 500 ppmw SiO_2 in the water within the boiler could generate steam containing 0.07 ppmw of SiO_2 (Fig. 18-11). When this steam is expanded through a turbine to 100 psig, the solubility of SiO_2 decreases to about 0.01 ppmw. The silica coming out of solution ($0.07 - 0.01 = 0.06$ ppmw) could coat turbine blades and eventually result in extensive turbine maintenance. This problem could be avoided as shown in Fig. 18-11 if the silica content of the water in the boiler were kept below 100 ppmw.

While there are other considerations (such as corrosive or deposit forming tendencies) in establishing limits for boiler water composition, the ABMA recommendations (Fig. 18-12) clearly indicate that boiler feedwater purity becomes more important as operating pressures increase. The ASME publishes the "Consensus on Operating Practices for the Control of Feed Water and Boiler Water Chemistry in Modern Industrial Boilers."[8] This contains a series of tables for various boiler types.

Boiler Water Treatment–General

Boiler system water treatment is classified as either external or internal. The most common chemical reactions in both external and internal water treatment are shown in Fig. 18-13.

External treatment is the reduction or removal of impurities from water outside the boiler; it includes solids removal, precipitation softening, ion exchange processes (softening, demineralization, dealkalization), evaporation, reverse osmosis, electrodialysis, and deaeration.

Internal treatment is the conditioning of impurities within the boiler. This involves adding chemicals to scavenge oxygen, control scale, condition sludge, control pH and foaming, and mitigate corrosion.

Boiler Water Treatment–External

Solids Removal Methods — include settling, clarification, and filtration. Selection of the appropriate suspended solids removal system depends upon the nature and concentration of suspended solids and the degree of solids removal required.

A substantial degree of suspended solids removal is frequently achieved through settling of untreated water under relatively quiescent conditions. This is termed settling; it removes only relatively coarse solids.

Clarification involves treating the water with various chemicals including alum, iron salts, or polymeric materials to agglomerate smaller particles, then settling to achieve a significantly higher degree of solids removal. Reactor-clarifiers of various designs are available to facilitate the clarification process. Settling is sometimes necessary prior to clarification to prevent overload of the clarifier; this also provides some surge volume of water upstream of the clarifier, facilitating process control.

Filtration of water through a bed of sand, anthracite, or some similar medium can be used as a stand-alone process or for additional suspended solids removal after subsidence or clarification. Both gravity and pressure filters are available. Filters are cleaned of suspended solids by backwashing.

Precipitation Softening — usually involves the addition of lime or a combination of lime and soda ash to remove various constituents from water by precipitation; this is followed by clarification and usually filtration. Concentrations of calcium, magnesium, alkalinity, and silica can be reduced. When only lime is used, a reduction in total dissolved solids can also be obtained. The precipitation products of either lime or lime-soda ash softening are primarily calcium carbonate and magnesium hydroxide. The softening process is carried out at either ambient (cold process) or elevated (hot process) temperature. Because of the inverse temperature solubilities

FIG. 18-11

Relationships Between Boiler Pressure, Boiler Water Silica Content, and Silica Solubility in Steam[4]

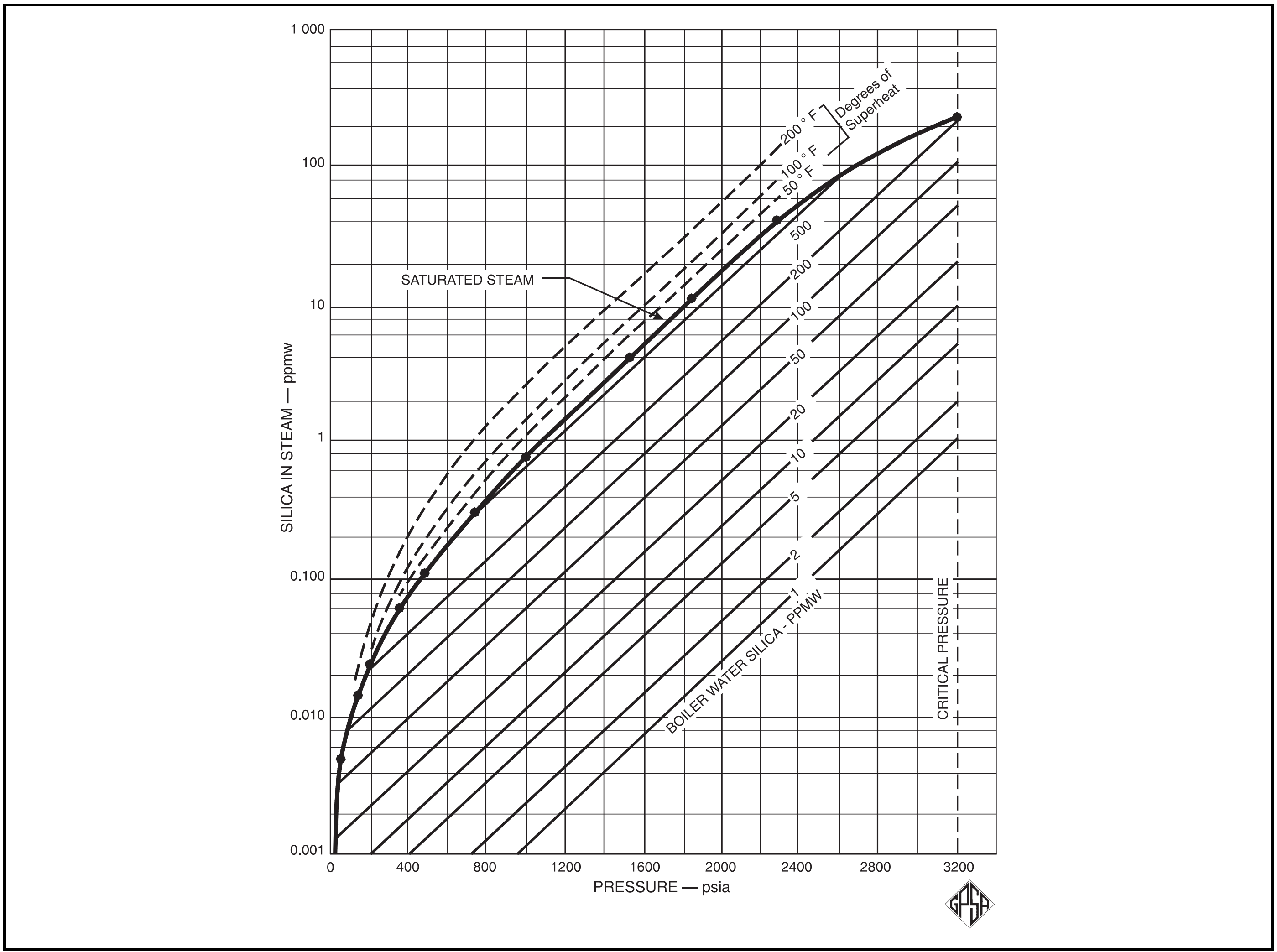

FIG. 18-12

Recommended Boiler Water Limits and Estimates of Carryover Limits That Can Be Achieved

Drum Pressure psig	Maximum Boiler Water Solids, ppmw	Maximum Total Alkalinity as $CaCO_3$, ppmw	Maximum Suspended Solids, ppmw	Steam TDS Corresponding to Maximum Boiler Water TDS	Maximum Fractional Carryover, FCO (Note 2)
0 – 300	3500	Note 1	15	1.0	0.0003
301 – 450	3000	"	10	1.0	0.0003
451 – 600	2500	"	8	1.0	0.0004
601 – 750	1000	"	3	0.5	0.0005
751 – 900	750	"	2	0.5	0.0006
901 – 1000	625	"	1	0.5	0.0007
1001 – 1800	100	*	1	0.1*	0.001
1801 – 2350	50	*	1	0.1*	0.002
2351 – 2600	25	*	1	0.05*	0.002
2601 – 2900	15	*	1	0.05*	0.003

*Not Applicable

Note 1 – 20% of Actual Boiler Water Solids. For TDS ≤ 100 ppmw, the total alkalinity is dictated by the boiler water treatment.

Note 2 – Does not include vaporous silica caryover

TDS = Total Dissolved Solids

FCO = Fractional Carryover

Reprinted by permission ABMA (American Boiler Manufacturers Association), Arlington, Virginia

of calcium carbonate and magnesium hydroxide, hot process softening is more effective. However, the hot process is not always used because of other factors such as consideration of additional downstream treatment needs, ultimate use of the softened water, and overall equipment and operating costs.

Ion Exchange Processes — include softening, demineralization, and dealkalization. The reactions involved in these ion exchange processes are illustrated in Fig. 18-14.

In softening, calcium and magnesium ions (hardness ions) are exchanged for the more soluble sodium ions.

In demineralization, cations are exchanged for hydrogen ions (H^{+1}) and anions are exchanged for hydroxyl ions (OH^{-1}); the result is relatively pure water ($H^{+1} + OH^{-1} = H_2O$).

In dealkalization, the ions contributing to alkalinity (carbonate, bicarbonate, and hydroxyl ions) are exchanged for chloride ions.

A typical ion-exchange bed is shown in Fig. 18-15. Ion exchange units are usually installed with two parallel beds to permit continuous service during regeneration. During normal operation, water enters the top of the vessel through a distributor pipe and as it flows through the bed of ion exchange material, undesirable ions in the water are exchanged for more acceptable ions. The treated water is drawn off by collector piping at the bottom. Following exhaustion of the ion exchange material, the unwanted ions are removed from the bed by regenerating with a solution containing the more acceptable ions.

Regeneration of the exchange material normally involves three separate steps: backwashing, introducing the regenerant chemicals, and rinsing.

Backwashing involves introducing water upflow through the bed at a controlled rate to remove accumulated suspended matter and bed fines and to classify the bed to ensure evenly-distributed flow. This is usually done immediately before the regenerant chemical solution is introduced. Regenerant chemicals are usually introduced at the top of the bed and removed through the bottom outlet.

Rinsing is usually a two-step process. A slow rinse (low flow rate) displaces the bulk of the excess regenerant chemical and unwanted ions from the bed. This is followed by a fast rinse (high flow rate) which continues until the effluent water is of satisfactory quality.

Operating costs for ion exchange units are determined by the amounts of regenerant chemicals and rinse water, bed replacement expense, and spent regenerant disposal requirements, all of which are roughly proportional to the amount of dissolved solids removed from the water. Generally, ion exchange units are most suitable for waters of 1,500 ppmw or less dissolved solids or where essentially complete removal of an undesirable ion (or ions) is required.

Evaporation — involves vaporizing the water to separate it from the dissolved solids. Vapor compression and multistage flash evaporators have largely replaced the traditional submerged-tube evaporators because of better energy efficiency and the capability, with appropriate water treatment, of operating free of scale for relatively longer periods. Vapor compression and flash evaporators can produce water of high purity from brackish and sea waters.

Operating costs are related principally to the cost of heat, and, to a lesser extent, the cost of utilities (cooling water, elec-

FIG. 18-13

Chemical Reactions in Treatment of Boiler Water

$CaSO_4 + Na_2CO_3 = \mathbf{CaCO_3} + Na_2SO_4$
$CaCl_2 + Na_2CO_3 = \mathbf{CaCO_3} + 2NaCl$
$Ca(NO_3)_2 + Na_2CO_3 = \mathbf{CaCO_3} + 2NaNO_3$
$MgSO_4 + Na_2CO_3 = \mathbf{MgCO_3} + 2Na_2SO_4$
$MgCl_2 + Na_2CO_3 = \mathbf{MgCO_3} + 2NaCl$
$H_2SO_4 + Na_2CO_3 = H_2CO_3 + Na_2SO_4$

$Na_2CO_3{+}H_2O$ + Boiler heat = $2NaOH + CO_2 + H_2O$
$Ca(HCO_3)_2$ + Boiler heat = $\mathbf{CaCO_3} + CO_2 + H_2O$
$Mg(HCO_3)_2$ + Boiler heat = $\mathbf{MgCO_3} + CO_2 + H_2O$

$MgSO_4 + 2NaOH = \mathbf{Mg(OH)_2} + Na_2SO_4$
$MgCl_2 + 2NaOH = \mathbf{Mg(OH)_2} + 2NaCl$
$H_2SO_4 + 2NaOH = Na_2SO_4 + 2H_2O$
$H_2CO_3 + 2NaOH = \mathbf{Na_2CO_3} + 2H_2O$
$Ca(HCO_3)_2 + 2NaOH = \mathbf{CaCO_3} + Na_2CO_3 + 2H_2O$
$Mg(HCO_3)_2 + 4NaOH = \mathbf{Mg(OH)_2} + 2Na_2CO_3 + 2H_2O$

$3CaSO_4 + 2Na_3PO_4 = \mathbf{Ca_3(PO_4)_2} + 3Na_2SO_4$
$3MgSO_4 + 2Na_3PO_4 = \mathbf{Mg_3(PO_4)_2} + 3Na_2SO_4$
$3MgCl_2 + 2Na_3PO_4 = \mathbf{Mg_3(PO_4)_2} + 6NaCl$

$CaSO_4 + Na_2SiO_3 = \mathbf{CaSiO_3} + Na_2SO_4$
$MgSO_4 + Na_2SiO_3 = \mathbf{MgSiO_3} + Na_2SO_4$
$MgCl_2 + Na_2SiO_3 = \mathbf{MgSiO_3} + 2NaCl$

$H_2CO_3 + Ca(OH)_2 = \mathbf{CaCO_3} + 2H_2O$
$Ca(HCO_3)_2 + Ca(OH)_2 = \mathbf{2CaCO_3} + 2H_2O$
$Mg(HCO_3)_2 + 2Ca(OH)_2 = \mathbf{Mg(OH)_2} + \mathbf{2CaCO_3} + 2H_2O$

$CaSO_4 + Ba(OH)_2 = \mathbf{BaSO_4} + Ca(OH)_2$
$MgSO_4 + Ba(OH)_2 = \mathbf{Mg(OH)_2} + \mathbf{BaSO_4}$
$H_2CO_3 + Ba(OH)_2 = \mathbf{BaCO_3} + 2H_2O$

$CaSO_4 + BaCO_3 = \mathbf{BaSO_4} + \mathbf{CaCO_3}$
$MgSO_4 + BaCO_3 = \mathbf{BaSO_4} + \mathbf{MgCO_3}$

$MgSO_4 + 2NaCl = MgCl_2 + Na_2SO_4$
$MgCl_2 + 2H_2O = Mg(OH)_2 + 2HCl$
$FeCl_2 + 2H_2O = Fe(OH)_2 + 2HCl$
$FeSO_4 + 2H_2O = Fe(OH)_2 + H_2SO_4$

$CaSO_4 + Na_2Z = CaZ^* + Na_2SO_4$
$MgSO_4 + Na_2Z = MgZ^* + Na_2SO_4$
$CaCl_2 + Na_2Z = CaZ^* + 2NaCl$
$MgCl_2 + Na_2Z = MgZ^* + 2NaCl$
$Ca(HCO_3)_2 + Na_2Z = CaZ^* + 2NaHCO_3$
$Mg(HCO_3)_2 + Na_2Z = MgZ^* + 2NaHCO_3$

*Upon regeneration with a strong salt (NaCl) brine, the zeolite is converted back to Na_2Z. The calcium and magnesium chlorides formed during the "exchange" regeneration (CaZ or $MgZ + 2NaCl = Na_2Z + CaCl_2$ or $MgCl_2$) are disposed of as waste.

The formulas in **heavy type** indicate precipitates, or sludges.

FIG. 18-14

Types of Ion-Exchange Processes

(A)	$Ca(HCO_3)_2$	$\rightarrow$	Cation Na^{+1} Exchanger	$\rightarrow$	$NaHCO_3$
	$CaSO_4$	$\rightarrow$		$\rightarrow$	Na_2SO_4
(B)	$Ca(HCO_3)_2$	$\rightarrow$	Cation H^{+1} Exchanger	$\rightarrow$	H_2CO_3
	$CaSO_4$	$\rightarrow$		$\rightarrow$	H_2SO_4
(C)	Na_2SO_4	$\rightarrow$	Anion Cl^{-1} Exchanger	$\rightarrow$	NaCl
	$NaHCO_3$	$\rightarrow$		$\rightarrow$	NaCl
(D)	H_2CO_3	$\rightarrow$	Anion OH^{-1} Exchanger	$\rightarrow$	H_2O
	H_2SO_4	$\rightarrow$		$\rightarrow$	H_2O

Conventional Softening — Process (A)

Dealkalization by Split Stream Softening — Blending Effluents from (A) and (B)

FIG. 18-15

Typical Ion-Exchange Bed

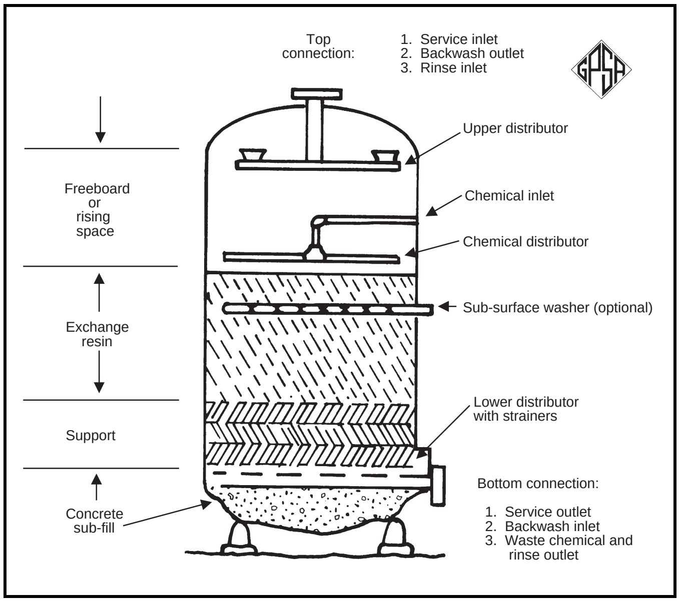

tricity, etc.) and water treating chemicals. Heat (energy) costs are relatively independent of the feed water composition.

Reverse Osmosis — involves separating water from dissolved solids by forcing the water to pass through a semi-permeable membrane which retains most of the dissolved solids. As illustrated in Fig. 18-16, this is accomplished by providing sufficient pressure on the system feedwater to overcome the normal osmotic pressure and produce a reasonable flow rate through the membrane.

A typical brackish water with a dissolved solids content of 1500 ppmw will have an osmotic pressure of about 15 psi; seawater with a dissolved solids content of about 35000 ppmw has an osmotic pressure of about 350 psi. The applied pressure for brackish water purification is typically in the range of 400-600 psig and for seawater purification, in the range of 800-1000 psig. Recovery of product (desalted) water with reverse osmosis units ranges from 50 to 90% of the feedwater depending upon the feedwater composition, the product water quality requirement, and the number of stages utilized.

Operating costs consist mainly of pumping costs (the pressure drop across the membrane may be from 250 psi to 1000 psi, depending upon dissolved solids content and membrane selection) and membrane cleaning and replacement costs. For water containing from about 250 to 1500 ppmw dissolved solids, an economic comparison of ion exchange and reverse osmosis is frequently necessary to select the more cost effective process. Reverse osmosis has been successfully employed for desalination of seawater. In many cases, the reverse osmosis product water must be treated by one of the ion exchange processes if high quality boiler feedwater is required.

A pretreatment system is needed to avoid fouling or excessive degradation of the membrane. Typically, pretreatment will include filtration to remove suspended particles and addition of chemicals to prevent scaling and biological growth. Because the optimum operating temperature for reverse osmosis systems is about 75-80°F, it is frequently desirable to heat the feedwater. This represents an additional operating cost; however, because reverse osmosis is a continuous process which does not require regenerant chemicals, the cost of disposing of the waste water from the reverse osmosis system may be less than that of waste water from an ion exchange unit.

Electrodialysis — involves separating water from dissolved solids by passing the dissolved solids (ions) through a semi-permeable membrane which is relatively impervious to water. This is accomplished by means of a direct current electrical field which transports the ions through the membranes. Fig. 18-17 shows a basic electrodialysis system with alternating cation-selective and anion-selective membranes.

Recovery of product (deionized) water with electrodialysis units ranges from 50 to 90% of the feedwater depending upon the number of stages and degree of recirculation utilized. Operating costs consist mainly of power costs (typically 6-10 kwh/1000 gallons of product water) and membrane cleaning and replacement costs. Based upon combined capital and operating costs, the electrodialysis process is most economical when used to desalt brackish water (1000 to 5000 ppmw dissolved solids) to a product water concentration of about 500 ppmw dissolved solids.

A pretreatment system is usually needed to prevent fouling or degradation of the membranes. Electrodialysis units can operate over a pH of 1 to 13 and at temperatures up to about 110°F.

Deaeration (Degasifying) — Although other gases (e.g. H_2S, ammonia, methane) can be present in source or makeup water, the dissolved gases of primary concern in boiler feedwater and steam condensate are oxygen and carbon dioxide. Both are highly corrosive and should be removed to the greatest extent possible because the presence of these gases can result in significant damage to piping and equipment and the resulting corrosion products can foul boiler heat transfer surfaces. If a steam condensate treater (polisher) is utilized, high concentrations of corrosion products increase its load and oxygen can attack the ion exchange resin of the treater, especially at higher temperatures. Dissolved oxygen can also cause pitting-type corrosion in the boiler itself.

Dissolved gases can be substantially removed from water physically by stripping with, for example, air (to remove H_2S) or methane (to remove oxygen) or by applying a vacuum (Fig. 18-18). Boiler feedwater degasifiers (deaerating heaters and deaerators) utilize low pressure steam for stripping and, depending upon the design of the unit, will reduce dissolved oxygen concentrations to, respectively, about 0.03 cc/liter (4.04 ppmw) and about 0.005 cc/liter (0.007 ppmw) or less. Deaerators operating at pressures of 2 to 5 psig will usually also remove free carbon dioxide completely but not bicarbonate and carbonate ions which can decompose and release CO_2 at boiler temperatures.

Deaerators are of two basic types – the tray type and the spray type. In the tray type (Fig. 18-19), the water is distributed over trays and steam is injected to strip the dissolved gases from the water as it cascades down from tray to tray. The spray type (Fig. 18-20) uses spray nozzles to “atomize” the water into droplets. While deaerators can reduce oxygen to very low concentration levels, chemical treatment may still be needed to remove the last traces.

Boiler Water Treatment – Internal

Internal treatment complements external treatment by taking care of any residual impurities entering the boiler with the feedwater. Internal treatment alone can sometimes be used, especially for low pressure boilers and when the makeup water is low in dissolved solids. Chemical dosages for internal water treatment are based on the amounts and types of impurities in the feedwater and are generally fed at rates slightly in excess of stoichiometric requirements to provide a residual in the boiler water. The boiler water is then tested for this residual chemical which serves as the basis for control of treating chemical feed rate and ensures that sufficient chemical is available in the event of unexpected increases in feedwater impurities concentrations.

Oxygen Scavenging — Some oxygen remains in the boiler feedwater after deaeration and this residual oxygen must be removed to control boiler system corrosion. Chemical oxygen scavengers such as sodium sulfite and hydrazine are commonly used. These chemicals remove the oxygen by the following reactions:

$$2\ Na_2SO_3 + O_2 \rightarrow 2\ Na_2SO_4 \qquad \textbf{Eq 18-1}$$

$$N_2H_4 + O_2 \rightarrow 2\ H_2O + N_2 \qquad \textbf{Eq 18-2}$$

Oxygen scavengers are usually introduced into the boiler system immediately downstream of deaeration, frequently into the deaerator storage tank, in order to minimize corrosion of as much of the system as possible.

Sodium sulfite reacts rapidly with oxygen at temperatures as low as 212°F, is easy to handle, and involves simple control tests. The use of sodium sulfite is usually limited to lower pres-

FIG. 18-16

Principle of Reverse Osmosis Used to Obtain Purified Water from a Salt Solution[2]

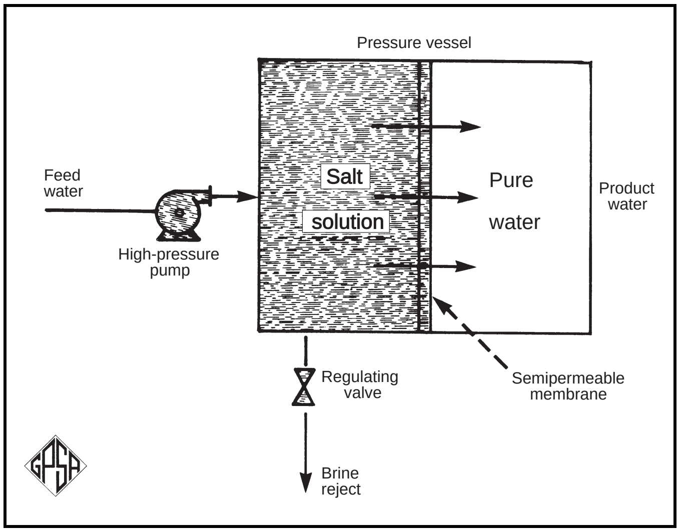

FIG. 18-17

Electrodialysis Process Desalts Water Via Membranes of Alternating Ion Selectivity[2]

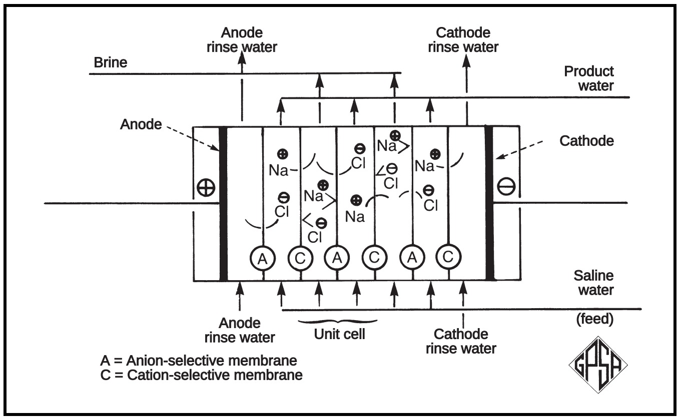

FIG. 18-18

Vacuum Deaerator[5]

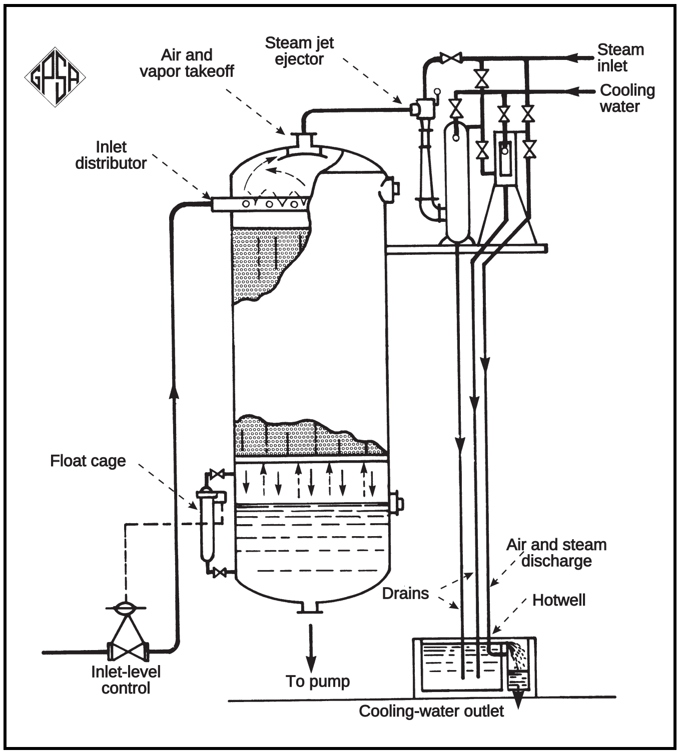

FIG. 18-19

Tray/Spray Deaerator[5]

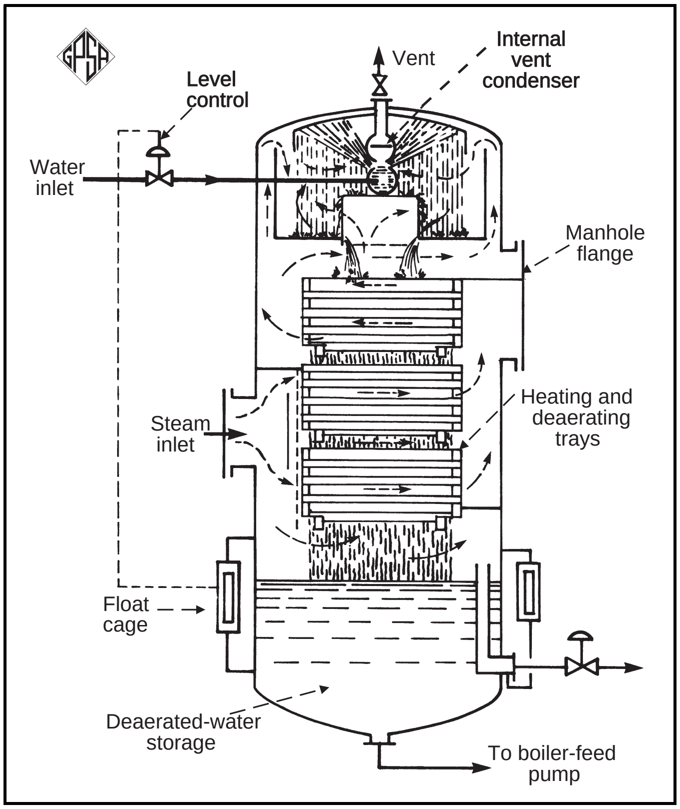

FIG. 18-20

Spray-Type Deaerator[5]

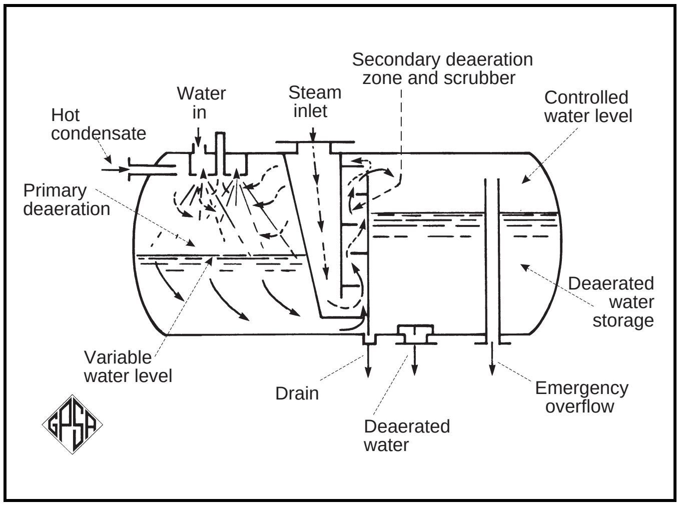

sure boilers because at higher boiler pressures, it can decompose and form potentially corrosive sulfur compounds such as sulfur dioxide (SO_2) and hydrogen sulfide (H_2S). In addition, the use of sodium sulfite will result in an increase in boiler water solids unless blowdown is increased. Because the oxygen-sulfite reaction (Eq 18-1) is inhibited by some boiler waters, catalyzed sodium sulfite containing materials which speed the reaction to completion is frequently used instead of the uncatalyzed material.

Catalyzed hydrazine will react with oxygen at an acceptable rate at low water temperatures. The use of hydrazine and catalyzed hydrazine is economically attractive principally in high pressure boiler systems where extremely low boiler water solids content is essential. Hydrazine reacts too slowly with oxygen at low temperatures to provide effective scavenging, is toxic, and requires special handling precautions and equipment. Control testing for hydrazine residuals is difficult and it decomposes in the boiler to form ammonia which can cause excessive corrosion of copper and copper alloys.

Scale Control — Scale formation involves the deposition of insoluble salts on heat transfer surfaces. The most common method of controlling scale is to precipitate potential scale-forming ions as non-adhering solids, or sludges, or as loosely-adhering scales. Calcium ions are preferably precipitated as calcium hydroxyapatite [$3Ca_3(PO_4)_2 \cdot Ca(OH)_2$]; magnesium is preferably precipitated as serpentine [$2MgSiO_3 \cdot Mg(OH)_2 \cdot H_2O$]. These sludges are more flocculent or fluid when precipitated at a pH above about 9.5. Caustic soda, soda ash, or a blend of phosphates can be fed to provide this alkalinity if there is inadequate natural alkalinity in the feedwater. Proper control of phosphate and silicate residuals avoids the formation of magnesium phosphate (a sticky precipitate) and calcium silicate (normally a dense, hard scale).

In higher pressure boilers and some lower pressure boilers with high purity feedwater, coordinated phosphate-pH control is practiced. This control method provides both the phosphate residual and the pH desired in the boiler by feeding a combination of disodium and trisodium phosphates. Its purpose is to avoid the presence of free hydroxide, thus eliminating the potential for caustic attack of boiler surfaces.

Chelating agents provide an alternative approach to scale control that may be attractive for some low pressure boiler systems. These chemicals form soluble complexes with ions such as calcium and magnesium. Some chelating agents will also solubilize iron and copper ions. Chelating agents should be supplemented with an antifoam agent and an oxygen scavenger. The boiler feedwater must be low in hardness (1-2 ppmw or less) for chelating agents to demonstrate an economic advantage over the precipitation scale control methods. Chelating agents have not been successfully utilized in high pressure boilers.

Sludge Conditioning — Various organic materials are often used to condition the boiler precipitates or sludges to make them fluid or free-flowing for easier removal by blowdown. These are usually derivatives of tannin or lignin, synthetic materials, or, in some cases, derivatives of seaweed. Starch is sometimes used in high silica waters. Sludge conditioners are frequently combined with phosphates and chelating agents. Antifoam materials, for smoother boiler operation, are sometimes also incorporated in these formulations.

Foam Control — Foaming can cause entrainment of boiler water with the steam although this carryover may also be the result of poor boiler design, ineffective steam-separating equipment, or high water levels. Foaming can be caused by high levels of dissolved solids, suspended solids, alkalinity, or by the introduction of foaming-promoting materials into the boiler, for example, by the use of oil-contaminated steam condensate. Although effective antifoam agents are available to suppress foam formation, it is usually more economical to reduce or eliminate the problem by adjusting boiler water treatment (external and/or internal), increasing boiler blowdown, eliminating foam-promoting contaminants from recycled steam condensate, etc.

Corrosion Mitigation — Corrosion in boiler and steam/steam condensate systems is usually due to the effect of either low pH or the presence of oxygen.

Low pH (below neutral pH = 7) is usually caused by dissolved carbon dioxide and the resulting corrosion is normally of a general nature over the entire metal surface. This acidic corrosion can be mitigated by raising the pH. Soda ash (Na_2CO_3) and caustic soda are often used for this purpose in boiler feedwater systems. In boilers, the proper water treatment for sludge and scale control will normally result in a satisfactorily high pH of 10-11.

Pretreatment of the boiler feedwater to reduce carbonate alkalinity will result in an equivalent reduction in the potential carbon dioxide content of the steam and the carbonic acid content of the steam condensate. Filming amines, which form a thin protective layer on metal surfaces, and neutralizing amines, which react with carbon dioxide and raise the pH of the steam condensate to a sufficiently high level (8.5 to 9.5), are frequently used to mitigate corrosion in steam condensate systems.

Filming amines, which tend to decompose at higher temperatures, are often fed to the steam headers at a rate sufficient to form and maintain the desired corrosion-resistant film. Filming amines will also protect the steam condensate system from corrosion due to oxygen. Neutralizing amines, which are quite stable, are usually added to the boiler feedwater at a rate proportional to the carbon dioxide content of the steam. Neutralizing amines can be used in high temperature, high pressure steam systems, but these amines will not protect against oxygen attack and are usually not economical in steam systems containing high concentrations of carbon dioxide. Ammonia is sometimes substituted for neutralizing amines; however, it should not be used in systems containing copper or most copper alloys.

Oxygen may be present in the makeup water or may result from air leaks into the steam/steam condensate systems; the resulting corrosion is generally in the form of pitting. Oxygen-related corrosion can be mitigated by deaeration of boiler feedwater, the use of chemical oxygen scavengers, and the addition to the steam/steam condensate systems of a filming amine.

Caustic Embrittlement — Caustic embrittlement is intercrystalline cracking of boiler steel which may occur in the presence of all of the following factors:

- The metal must be subjected to a high level of stress.
- There must be some mechanism (a crevice, seam, leak, etc.) permitting concentration of the boiler water on the stressed metal.
- The concentrated boiler water must possess embrittling characteristics and chemically attack the boiler metal. Of these three factors, the embrittling characteristics of the boiler water generally can best be shown to be present or absent in a boiler. An Embrittlement Detector developed by the U.S. Bureau of Mines can be used to determine this water characteristic. As an alternative, since there are no simple chemical tests to measure embrittlement and there is always the possibility of embrittlement occurring, a chemical embrittlement inhibitor, generally sodium nitrate, is often added to the boiler. A definite ratio of sodium nitrate to caustic alkalinity in the boiler water is required for inhibition according to the formula,

$$\frac{NaNO_3}{NaOH}\text{ Ratio} = \frac{(\text{Nitrate as } NO_3\text{, ppmw})\ (2.14)}{\begin{pmatrix}\text{M alkalinity as}\\ CaCO_3\text{, ppmw}\end{pmatrix} - \begin{pmatrix}\text{Phosphate as}\\ PO_4\text{, ppmw}\end{pmatrix}}$$

Eq 18-3

This ratio depends upon the operating pressure of the boiler as recommended by the U.S. Bureau of Mines in Fig. 18-21.

FIG. 18-21

Recommended $NaNO_3$/NaOH Ratio for Boilers

Boiler Operating Pressure	$NaNO_3$/NaOH Ratio
Up to 250 psi	0.20
250-400 psi	0.25
400-700 psi	0.40

OPEN COOLING WATER SYSTEMS

In an open recirculating cooling water system, warm water from the coolers, condensers, etc., is routed to a cooling tower where cooling of the water is effected primarily by evaporation of a portion of the circulating water. This concentrates the dissolved solids in the water; the level of concentration of dissolved solids is controlled by blowdown of some of the circulating water. At equilibrium, the rate of dissolved-solids loss with blowdown and windage or drift (droplets of water leaving the tower or pond) equals that gained with the water added as makeup to replace water lost by evaporation, drift, and blowdown. Water treatment is employed to prevent or minimize:

- scaling or heat exchanger surfaces by salts of hardness ions, silica, or silicates
- corrosion of the system by oxygen or low pH
- attack of cooling tower wood by algae, bacteria, or fungi, and
- fouling of heat exchanger surfaces by suspended solids and marine organisms

See Section 11 for additional information about cooling towers, including heat and material balance calculations.

Scale Control

Scale is an adherent deposit laid down during operation, causing impaired heat transfer and restricting flow in the cooling water system. The scale-forming tendency of a water increases with increasing cycles of concentration of dissolved solids in a recirculating system. Calcium carbonate, the principal scale found in cooling water systems, forms when calcium and alkalinity levels become too high. Because it has an inverse temperature solubility, calcium carbonate tends to deposit on warmer heat transfer surfaces.

Several scaling indices have been developed and are often used as guides to predict the tendency of cooling water to form scale. These include the Langelier Saturation Index (LSI) and the Ryznar Stability Index (RSI). The main objective in using the Langelier or the Ryznar index is to adjust the cooling water to a non-scaling, non-corrosive condition. A positive LSI indicates a tendency to deposit calcium carbonate scale; a negative LSI indicates an unsaturated condition with respect to calcium carbonate and a tendency to dissolve any existing calcium carbonate and to be corrosive. Similarly, a RSI less than 6.0 indicates a tendency to deposit calcium carbonate; a RSI greater than 6.0 indicates a tendency to dissolve existing calcium carbonate deposits and to be corrosive. Fig. 18-22 can be used to calculate pH_S, the pH at which the water is in equilibrium with calcium carbonate, and Fig. 18-23 is a comparison of scaling tendency as characterized by the two indices.

A common water treatment strategy is to adjust the cooling water to a slightly scaling condition (assumed therefore to be a non-corrosive condition) and to use a scale inhibitor. However, it should be emphasized that the LSI and RSI are only measures of the tendency to deposit or dissolve calcium carbonate scale and that the two indices often give inconsistent indications.

Two different approaches to scale control are often followed. The alkalinity can be maintained at a level at which calcium carbonate clearly will not form, or a scale inhibitor can be used.

Low alkalinities may be maintained in some cases by limiting the cycles of concentration; however, this increases blowdown requirements, increasing water consumption and wastewater production. In most cases, sulfuric acid is used to reduce alkalinity by converting bicarbonate and carbonate alkalinity to carbon dioxide and water. Unfortunately, this in-

FIG. 18-22

Nomograph for Determination of Ryznar and Langelier Scaling Indexes[7]

Example:

Given the following data, find the values of both the Langelier and the Ryznar Indexes:

pH = 6.9

Temp. = 68°F (20°C)

TDS = 72 ppm

Calcium hardness as $CaCO_3$ = 47 ppm

Methyl orange alkalinity as $CaCO_3$ = 47 ppm

Solution:

1. Reading at the bottom of the left-hand side, find TDS = 72 and note the intersection of this reading with the curved 70°F line.
2. Carry this intersection horizontally to pivot line 2.
3. Connect that point with Ca hardness = 34 on the right-hand scale.
4. Note the intersection on pivot line 3.
5. Connect that point with alkalinity = 47 on the left-hand scale.
6. Note the intersection on pivot line 4. Connect this intersection to pH = 6.9.
7. The Langelier Index = –1.8 and the Ryzner Index = 10.5. This water would be said to be very corrosive.

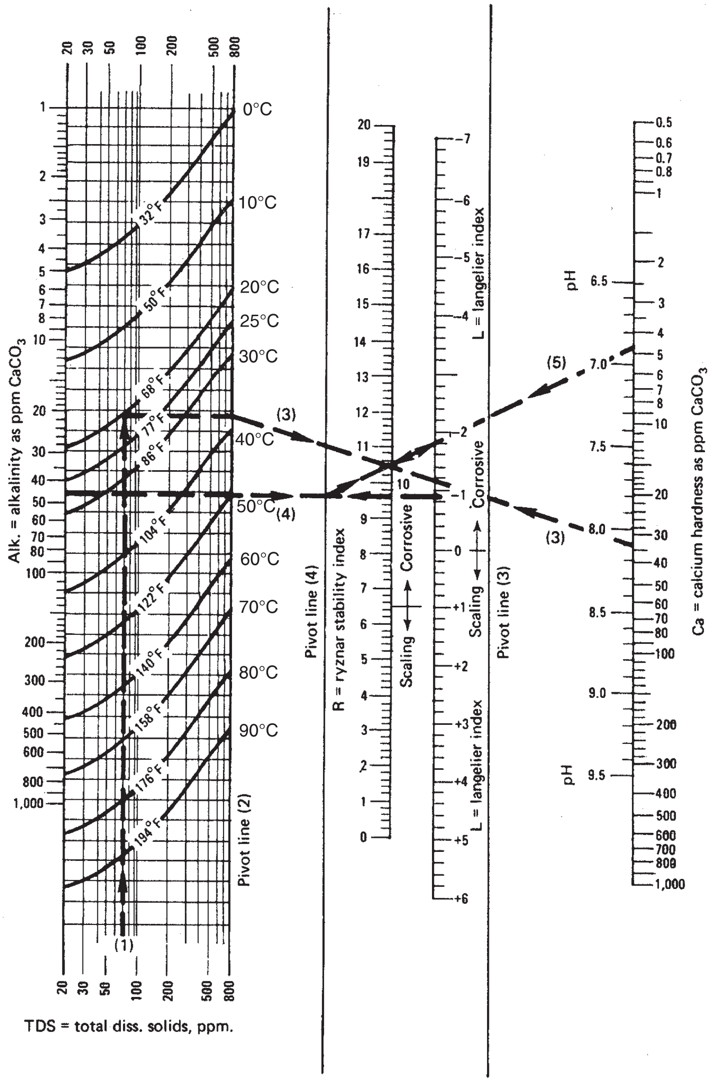

FIG. 18-23

Scaling Tendency of Water According to Langelier's and Ryznar's Indices[3]

LSI	RSI	Condition
3.0	3.0	Extremely severe
2.0	4.0	Very severe
1.0	5.0	Severe
0.5	5.5	Moderate
0.2	5.8	Slight
0.0	6.0	Stable water*
–0.2	6.5	No scaling, very slight tendency to dissolve scale
–0.5	7.0	No scaling, slight tendency to dissolve scale
–1.0	8.0	No scaling, moderate tendency to dissolve scale
–2.0	9.0	No scaling, strong tendency to dissolve scale
–3.0	10.0	No scaling, very strong tendency to dissolve scale

* No scaling, no tendency to dissolve scale

creases the sulfate content of the water and, consequently, the potential for calcium sulfate scale formation. Although calcium sulfate also has an inverse temperature solubility, it is considerably more soluble than calcium carbonate, so the tendency toward scale formation is reduced. Generally, calcium sulfate will not be a problem if the calcium concentration in the circulating water is maintained below about 900 ppmw (as calcium carbonate). Calcium and alkalinity levels can also be reduced by softening the makeup water or a sidestream from the circulating water system (see "Boiler Water Treatment-External" under "Boiler Water Systems") or by using a makeup water with low dissolved solids such as the "fast rinse" water from a demineralizer.

Addition of acid to the cooling water system should preferably be controlled automatically. The acid might be fed in proportion to makeup water flow and trimmed by a circulating water pH signal. Acid should be introduced into the tower basin remote from the circulating pumps at a location where intimate mixing can occur.

Among the materials in common use to inhibit calcium carbonate scale formation are inorganic polyphosphates and various organic materials, including phosphonates, phosphate esters, and polyacrylates. Inorganic polyphosphates and phosphate esters tend to hydrolyze to form orthophosphate. Calcium phosphate deposits can form if the orthophosphate level becomes too high. Many scale inhibitors tend to control calcium sulfate scale formation as well as calcium carbonate.

Silica levels are usually maintained below about 150 ppmw to avoid formation of siliceous scales within the system. Where the silica level of the makeup water is inordinately high, it can be reduced by precipitation softening. Alternatively, precipitation softening of a sidestream from the circulating water system can be used to remove silica.

Corrosion Control

Factors contributing to the corrosiveness of cooling water are: dissolved oxygen concentration, pH, calcium and alkalinity concentrations, dissolved solids concentration, water temperature, and circulating-system metallurgy. Successful application of inhibitors requires a detailed understanding of the various corrosion processes that are possible in a given system. Typical inhibitors are polyphosphates, chromates and dichromates, silicates, nitrates, ferrocyanides, and molybdates. Inhibitors specific to control of copper and copper alloy corrosion are sometimes used, particularly when the circulating water pH tends to be low.

Polyphosphates were used at one time as corrosion inhibitors in concentrations of 10 to 15 ppmw. Polyphosphates are seldom used now, however, because they revert to orthophosphate which can result in an undesirable calcium phosphate scale.

Chromates alone are effective inhibitors at concentrations of 100 to 300 ppmw; however, such high concentrations are seldom used because of environmental restrictions on chromate discharges and the high chemical makeup cost. Lower chromate concentrations are likely to promote pitting; however, satisfactory corrosion inhibition can be obtained at these lower chromate levels by adding zinc salts. Addition of phosphates as well as zinc salts further improves corrosion inhibition with chromates, but this inhibition system requires a close control of pH.

Proprietary formulations are available that provide satisfactory corrosion protection under broad operating conditions and at reasonable costs. Most of these formulations are blends of chromate, zinc salts, phosphates, and organic compounds. Increased restrictions on chromate discharges with blowdown streams have stimulated research on non-chromate inhibitors. Chromate can be removed from the cooling tower blowdown by precipitation and filtering or by ion exchange.

Biological Fouling

A cooling tower is an ideal environment for the development and growth of microorganisms. Algae can develop in the tower where sunlight is present while slime can develop in almost any part of the system. These deposits can cause local corrosion as well as plugging and reduction of heat transfer.

Growth of the microorganisms can be controlled by using chlorine, chlorinated phenols, organometallic salts, quaternary ammonium compounds, and various other biocides. Chlorination is probably the most widely used control method. A chlorine residual of 0.3 to 1.0 ppmw is usually effective. The most appropriate treatment is best determined experimentally. Proprietary compounds of several biocides have frequently been found to be more effective than any single material. These compounds are sometimes used alternately with chlorine.

Chlorination programs may be either continuous or intermittent. A generally successful program has been to chlorinate daily until a 1 ppmw free chlorine residual has been maintained for one hour. Chlorine can cause deterioration of cooling tower wood, so prolonged exposure to concentrations over 1 ppmw should be avoided. Limitations on chlorine concentrations in effluent waters have necessitated closer control of chlorine dosage. Several techniques have been employed to reduce chlorine residuals in cooling tower blowdown. The chlorine can be removed by reaction with reducing agents such as sulfur dioxide or sodium bisulfite, or blowdown can be discontinued until the chlorine residual of the circulating water has fallen to an acceptable level. In the latter technique, it is usually necessary to blowdown at a somewhat higher rate prior to the initiation of chlorination to ensure that cycles of concentration do not exceed control levels when blowdown is shut off.

Solids Removal

Continuous filtration of a portion of the total circulating water has been used in cooling systems for controlling the quantity of suspended solids. Antifouling agents can reduce or eliminate the need for mechanical filtration. Both chemical antifoulants and mechanical side-stream filters are sometimes used to combat very difficult suspended-solids problems.

When sand or mixed media filters are used, they can be sized using the following equation:

$$F = \left[\left(\frac{SS_I}{SS_F}\right) - 1\right] BD \qquad \textbf{Eq 18-4}$$

To provide 80% removal of suspended solids, a side-stream filter is often sized at four times the normal blowdown rate.

A disadvantage of side-stream filtration is the requirement of a significant quantity of water for backwashing. If this water is withdrawn immediately from the system at the required backwash rate, upsets in system concentrations can occur. A better approach is to withdraw the backwash water continuously from the circulating system and store this water until needed for backwashing. Backwash water must be discarded and cannot be permitted to reenter the cooling system.

ONCE-THROUGH COOLING WATER SYSTEMS

In a once-through system, no evaporation takes place. Since there is no increase in concentration of dissolved solids but only an increase in the water temperature, required water treatment is usually significantly reduced. The water is often obtained from a river, lake, or bayou, and aside from rough screening to protect circulating water pumps, removal of suspended solids is rarely practiced. Water treatment is sometimes employed to prevent or minimize scaling and corrosion, but more frequently, its purpose is to mitigate fouling from suspended solids and marine organisms. Discharge water temperature must be compatible with state and federal regulations. Permits for once-through systems, except for coastal (seawater) applications, can be difficult to obtain.

Various antifouling materials including polyacrylates, natural organic materials, and other organic polymers are used to control deposition of solids. The Langelier Saturation Index will provide some indication as to whether the water will tend to be scale-forming, corrosive, or neither. Calcium carbonate, the most common scale in once-through systems, is usually inhibited by applying one or a combination of several deposit-control materials such as polyphosphates, phosphonates, and polyacrylates. Shock treatment with chlorine may also be used to control biological fouling. As with recirculating water systems, chlorine residuals in once-through cooling water system discharges must comply with environmental regulations.

Corrosion of piping and exchangers in a once-through cooling water system can be a serious problem. Because it is usually impractical to use corrosion inhibitors, the problem is usually handled by using fiberglass reinforced plastic, cement-lined, plastic-lined, or other corrosion-resistant pipe and corrosion-resistant condenser and cooler tubing materials, such as 90/10 Cupro-Nickel and titanium.

CLOSED COOLING WATER SYSTEMS

The small amount of makeup water required for closed cooling water systems significantly reduces water-caused problems. Steam condensate or demineralized water is usually used in these systems so scaling is not a problem. High concentrations of corrosion inhibitor can be economically used. Antifreeze may be added for cold weather operation.

OTHER WATER SYSTEMS

Water treatment for potable (drinking) water systems must meet state and federal drinking water standards. Water treatment is not normally provided for systems such as fire water, utility water, etc., although the water in these systems must be reasonably free of suspended solids and relatively noncorrosive.

WASTEWATER TREATMENT AND DISPOSAL

Wastewater treatment and disposal methods must normally meet environmental regulations. These regulations usually consider technology limitations, volume of discharge and concentration of pollutants, method of disposal, nature of the receiving stream, etc. Some wastewater streams either with or without treatment may be recycled for use in systems requiring water of lesser quality. Final treatment usually requires removal of oil and suspended solids, reduction of biochemical and chemical oxygen demand (BOD and COD), and removal of toxic contaminants.

Surface disposal of plant wastewater (except for once-through cooling water system effluent which can generally be discharged directly if chlorine residuals are acceptable) using properly-lined evaporation ponds is sometimes allowed and can be used where evaporation rates are favorable. Underground disposal of wastewaters is permitted in some instances. In such cases, a thorough geological investigation is often required to ensure against contamination of protected aquifers. Removal of suspended solids and additional treatment to ensure compatibility among the various wastewater sources and the receiving aquifer must frequently be implemented in order to eliminate plugging of the underground reservoir. Treatment of wastewater prior to disposal to surface streams is almost always required. Reuse or recycle of wastewater streams within the plant can be considered and is often required by regulatory agencies. This often reduces overall plant wastewater treatment requirements significantly.

Boiler blowdown streams are alkaline (pH ~ 10), low in volume, and generally high in total dissolved solids content (although blowdown from high pressure boilers is normally low in dissolved solids). After cooling, this wastewater is normally compatible with other wastewater streams but may require neutralization prior to discharging. Because it is usually oil free, boiler blowdown may bypass any conventional oil-water separation step. High pressure boiler blowdown can be reused as cooling tower makeup or cooled, deionized, and reused as boiler makeup.

Cooling tower blowdown is often the major source of plant wastewater. Discharge limitations may apply to concentrations of total dissolved solids, specific ions such as sulfate, suspended solids, corrosion inhibitors such as hexavalent chromium or phosphates, biological control agents including chlorine, and various miscellaneous chemicals. The quantity of cooling tower blowdown may frequently be reduced, thereby reducing treatment requirements, by observing higher circulating water control limits, using more effective scale inhibitors, or treating cooling tower makeup water or a sidestream from the system. If the dissolved solids level exceeds established discharge limits, it is usually necessary to blow down at a higher rate in order to lower the concentration, although in some situations pretreatment of the makeup water will effect the necessary reduction. Another alternative would be to concentrate the blowdown by mechanical evaporation to facilitate disposal. High sulfate concentrations may result from using sulfuric acid for neutralization of alkalinity. Where sulfate concentrations are specifically limited, use of another acid, such as hydrochloric, precipitation softening of makeup water, or use of a scale inhibitor to allow operation at higher alkalinity levels are possible approaches to resolving this problem. Suspended solids can, of course, be reduced by filtration. Sidestream filtration, which would also improve cooling system operation might be utilized. A non-chromate corrosion inhibitor can be substituted for a chromate-based material, or the hexavalent chromium can be removed by chemical reduction, precipitation, clarification, and filtration or by ion exchange. Phosphate compounds can be handled by chemical or biological methods. If high intermittent concentrations of biological control agents are unavoidable, diversion of the blowdown to a holding pond for blending with better quality blowdown may be necessary.

Process water is usually contaminated with hydrocarbons and may be sour (contain dissolved hydrogen sulfide). Normally all wastewater contaminated with heavy hydrocarbons is handled with an API separator or corrugated plate interceptor (Fig. 18-24) where the oil is skimmed from the water. Wastewater contaminated with light hydrocarbons is often handled with a flash tank where the hydrocarbon vapors are sent to flare. Sour water is normally handled with a sour water stripper where the hydrogen sulfide is vented to incinerator or flare or sent to a sulfur recovery unit. Stripped sour water may be reusable as cooling tower or boiler makeup. Additional treatment may be needed before reuse is possible. In some cases, conventional treatment techniques are not adequate for process wastewater treatment. Such supplementary techniques as air flotation, biological treatment, activated carbon adsorption, ion exchange, ultraviolet irradiation, ozonation, chlorination, hydrogen peroxide oxidation, and precipitation and clarification may be necessary. Fig. 18-25 is an example of a complete wastewater treating system.

Produced water is normally contaminated with hydrocarbons, may be sour, and may range from very low to extremely high total dissolved solids. Treatment can be similar to that of process water. Produced water is often reusable in reservoir formation flooding operations.

Ion exchange process waste streams can have high concentrations of sodium chloride, acid or base, and are high in total dissolved solids. Adjustment of pH may be necessary before discharge with the other plant wastewater streams. In some cases, concentration by evaporation is needed to facilitate disposal. Reverse osmosis wastes are generally not as high in total dissolved solids and can frequently be reused as cooling tower makeup. Wastewater disposal requirements can often be significantly reduced by selecting the proper makeup water treatment system.

Chemical cleaning wastewaters can be acidic or alkaline, and contain high concentrations of dissolved metals. Adjustment of the pH, chemical precipitation of the metals, and removal of the precipitates by clarification and filtration is often necessary.

Plant runoff waters may have to be retained for flow equalization and oil and suspended solids removal prior to discharge. Adjustment of pH may also be necessary. If contaminated from process leaks, treatment similar to that described above for process water may be required, depending upon the degree and type of contamination. Removal of heavy metals, such as dissolved iron, is sometimes required. This is often accomplished by raising the pH to precipitate the metals as oxides or hydroxides, and then clarifying and filtering. Other approaches may be needed, depending upon the type of contamination and required degree of removal.

Plant sewage is generally treated by extended aeration, a modification of the activated sludge process. Package treatment plants are available for this purpose.

FIG. 18-24

Corrugated Plate Interceptor (CPI) Oil Separator[1]

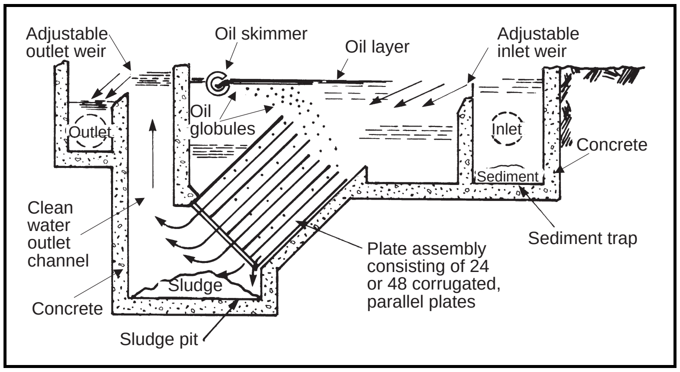

FIG. 18-25

Complete System for Treating Plant Wastewater[1]

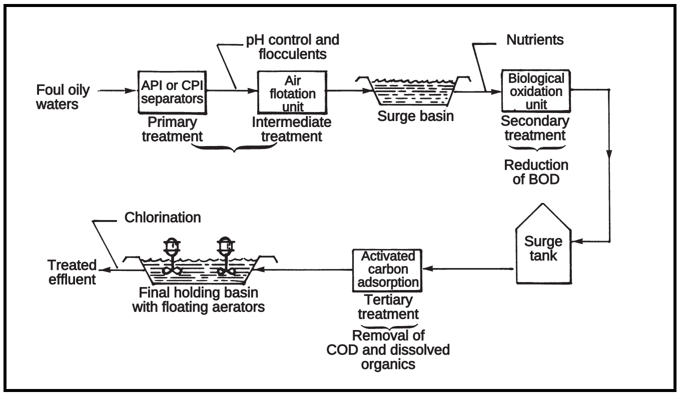

ELECTRICAL SYSTEMS

Electric-power applications in a modern gas processing plant are many, including: power distribution, illumination, space heating, heat tracing of water and product lines, communication, automation, signal transmission for process control, data logging, cathodic protection, grounding, and others.

The National Electrical Code (NEC), which is revised every three years, serves as the minimum acceptable standard.

Fig. 18-26 provides formulas for calculation and conversion of various electrical terms used throughout this section. Fig. 18-27 covers symbols used in electrical one-line diagrams. One-line diagrams are utilized extensively in electrical design to show the connection and relationship of electrical system components. Figure 18-28 shows an example one-line for a simple power system.

Power Supply System

It is important to identify the utilization voltage of each piece of equipment in order to properly design the electrical system. Once this has been accomplished, local loads may be grouped to be served from motor control centers and/or switchgear, which in turn may be served from other switchgear and ultimately served from transformers. These transformers are used to reduce the incoming service voltage. A typical system might take 69 kV or 138 kV power at a substation and reduce the voltage to 13.8 kV for distribution to local substations which in turn reduce the voltage to 480 volts, 3 phase for the utilization equipment. See Fig. 18-28. Consultation with the local electric utility is recommended to determine what supply voltages are available.

The capacity of the supply system may not need to be as great as the sum of nameplate ratings of each connected load. This is due to the fact that all the equipment may not be operating at the same time or, if operating, may not all be taking full-load current from the system at the same time.

In gas plants where the usage of each motor is generally known, making a load list is the best way to determine the system requirements in terms of the operating load. The load list should list the hp rating of each motor as well as its operating hp (brake hp), and whether the motor will run continuously, intermittently, or is a standby for other motors. The brake hp can either be obtained from the equipment designers, or calculated by the formulas given in other sections of this data book.

When the above list is completed, the kW of each motor should be calculated by the hp to kW formula given in Fig. 18-26 of this section, using the brake horsepower. In the absence of specific user guidelines these kW's may be added up using the following:

Motors

• Largest Motor	(1.25) (kW)
• All Continuous Motors	(1.00) (kW)
• All intermittent (to be determined by evaluating each use and plant requirements)	(0.20) (kW)
• Standby motors which *cannot* run when another is running can be ignored.	

Other Loads

• All flood lighting load	(1.00) (kW)
• Building lighting loads (consult the National Electrical Code, Article 220, for loads of various building occupancies).	(2 watts/sq ft of floor space)
• Larger of air conditioning or electrical heating	(1.00) (kW)
• Heat Tracing	(1.00) (kW)
• Miscellaneous Loads — Computers, laboratories, office machinery, etc.	(1.00) (Actual)

This total load is the *minimum* value to use in sizing the supply capacity. This does not leave any spare capacity for future additions. Other things should also be considered. If one motor is large in relationship to the total load, or if two or more motors must be started at the same time, it will generally be necessary to increase the supply capacity to provide the starting current which is approximately 5.5 times normal running current.

Whether purchasing or generating power, the starting loads need to be considered in addition to the above calculations. If the motors will be started one at a time, the locked rotor current listed on the nameplate of the largest motor should be used in the above calculations instead of the kW • 1.25. If two or more motors need to be started at the same time, their combined locked rotor current needs to be used if it is larger than the locked rotor current of the largest motor.

Transformer Connections

Various connections of single-phase transformers commonly used in plant substations have their limitations, benefits, and advantages. Fig. 18-29 shows the most commonly used schematic diagrams of single-phase transformer connections.

Open Delta — The units will transform 86.6% of their rating, that is, two 100 kVA units connected open delta will each transform 86.6 kVA for a total of 173.2 kVA. The line currents must equal the winding currents; therefore, the transformer bank rating is reduced by the ratio of normal transformer current to normal line current (1/1.73), or 57.7%. The individual transformation in terms of kVA is (57.7%) (3/2) = 86.6%, since 3-phase voltage is delivered with only two units.

With the open delta connection, it is not necessary for the transformers to have the same impedance.

The voltage regulation of an open delta bank is poor and different for each phase resulting in unbalanced voltage conditions that may be detrimental to 3-phase induction motor operations.

Closed Delta — When three transformers are operated in a closed delta bank, care should be taken to make certain the impedances of the three units are practically the same. Transformers having more than 10% difference in impedance rating should not be operated together in a closed delta bank unless a reactor is used to increase the impedance of the unit having the lower impedance rating to a value equal to the other units.

If the voltage ratio of all three of the transformers is not the same, there will be a circulating current inside the delta. The current will be limited by the impedance of the three transformers considered as a series circuit.

FIG. 18-26

Electrical Formulas

Desired Data	Alternating Current		Direct Current
	Single Phase	Three Phase	
kilowatts	$\frac{V \bullet I \bullet PF}{1{,}000}$	$\frac{1.73 \bullet V \bullet I \bullet PF}{1{,}000}$	$\frac{V \bullet I}{1{,}000}$
kVA	$\frac{V \bullet A}{1{,}000}$	$\frac{1.73 \bullet V \bullet I}{1{,}000}$	
Reactive kVa	$\frac{V \bullet I \sqrt{1 - PF^2}}{1{,}000}$	$\frac{1.73 \bullet V \bullet I \sqrt{1 - PF^2}}{1{,}000}$	
Horsepower (Output)	$\frac{V \bullet I \bullet eff \bullet PF}{(746)(100)}$	$\frac{1.73 \bullet V \bullet I \bullet eff \bullet PF}{(746)(100)}$	$\frac{V \bullet I \bullet eff}{(746)(100)}$
Amperes (When horsepower is known)	$\frac{hp(746)(100)}{V \bullet eff \bullet PF}$	$\frac{hp(746)(100)}{1.73 \bullet V \bullet eff \bullet PF}$	$\frac{hp(746)(100)}{V \bullet eff}$
Amperes (When kilowatts are known)	$\frac{kW \bullet 1{,}000}{V \bullet PF}$	$\frac{kW \bullet 1{,}000}{1.73 \bullet V \bullet PF}$	$\frac{kW \bullet 1{,}000}{V}$
Amperes (When kVA is known)	$\frac{kVA \bullet 1{,}000}{V}$	$\frac{kVA \bullet 1{,}000}{1.73 \bullet V}$	

$$PF = \frac{kW}{kVA} = \frac{kW \bullet 1{,}000}{1.73 \bullet V \bullet I} \text{ (for 3–phase)}$$

PF = Power factor

eff = efficiency

$$\text{Motor kilowatts} = \frac{hp\ (0.746)\ (100)}{eff}$$

$$\text{Motor kVA} = \frac{hp\ (0.746)(100)}{eff \bullet PF} = \frac{kW}{PF}$$

$$\text{Motor full–load torque} = \frac{5{,}250 \bullet \text{Full– load hp}}{\text{Speed in rpm}}$$

$$\text{Synchronous speed in rpm} = \frac{120 \bullet \text{frequency}}{\text{Number of poles}}$$

It is good practice, before applying voltage to three transformers in closed delta, to insert a fuse wire between the leads coming from the high voltage bushings of two transformers closing the delta bank. The fuse wire should be of sufficient size to carry the exciting current of the transformers. This fuse wire offers a very simple means of making certain the transformers have the proper polarity.

Wye Delta — Transformers are connected for delta-delta to wye-delta to take advantage of 1.732 times the delta transmission voltage. It is not necessary that the impedance of the three transformers be the same.

If single-phased on the primary, fully-loaded motors connected on the secondary will draw 200% current in one phase and 100% in the other two phases. This requires overload elements in each phase for full protection.

Delta-Wye Grounded — With a delta-wye grounded connection, a combination of single and three-phase loads may be connected. This is the most common connection used to obtain a grounded secondary system. A grounded system is readily relayed for phase-to-ground faults, and the problem of high transients due to arcing grounds is minimized.

It is not necessary that the impedances of each unit in the bank be the same. A combination of single and 3-phase loads may be connected without causing any circulating currents. Three overload elements are required to protect a fully loaded motor for a single phase on the primary system.

Transformer Locations

Indoors

Transformers rated over 35,000 volts shall be installed in a vault. A transformer vault is a room with concrete walls, roof, and floor to meet a minimum fire resistance of three hours. It shall comply with NEC Sections 450-41 through 450-48.

Dry Type Transformers — Transformers installed indoors and rated 112½ kVA or less shall have a separation of at least 12 inches (305 mm) from combustible material unless separated therefrom by a fire-resistant, heat-insulating barrier, unless its rating is not over 600 volts and it is completely enclosed except for ventilating openings.

Transformers of more than 112½ kVA rating shall be installed in a transformer room of fire-resistant construction, unless the transformer has an 80°C rise or higher insulation and has proper fire barrier or distance separation to combustible material.

FIG. 18-27

Graphical Symbols for One-Line Electrical Diagrams

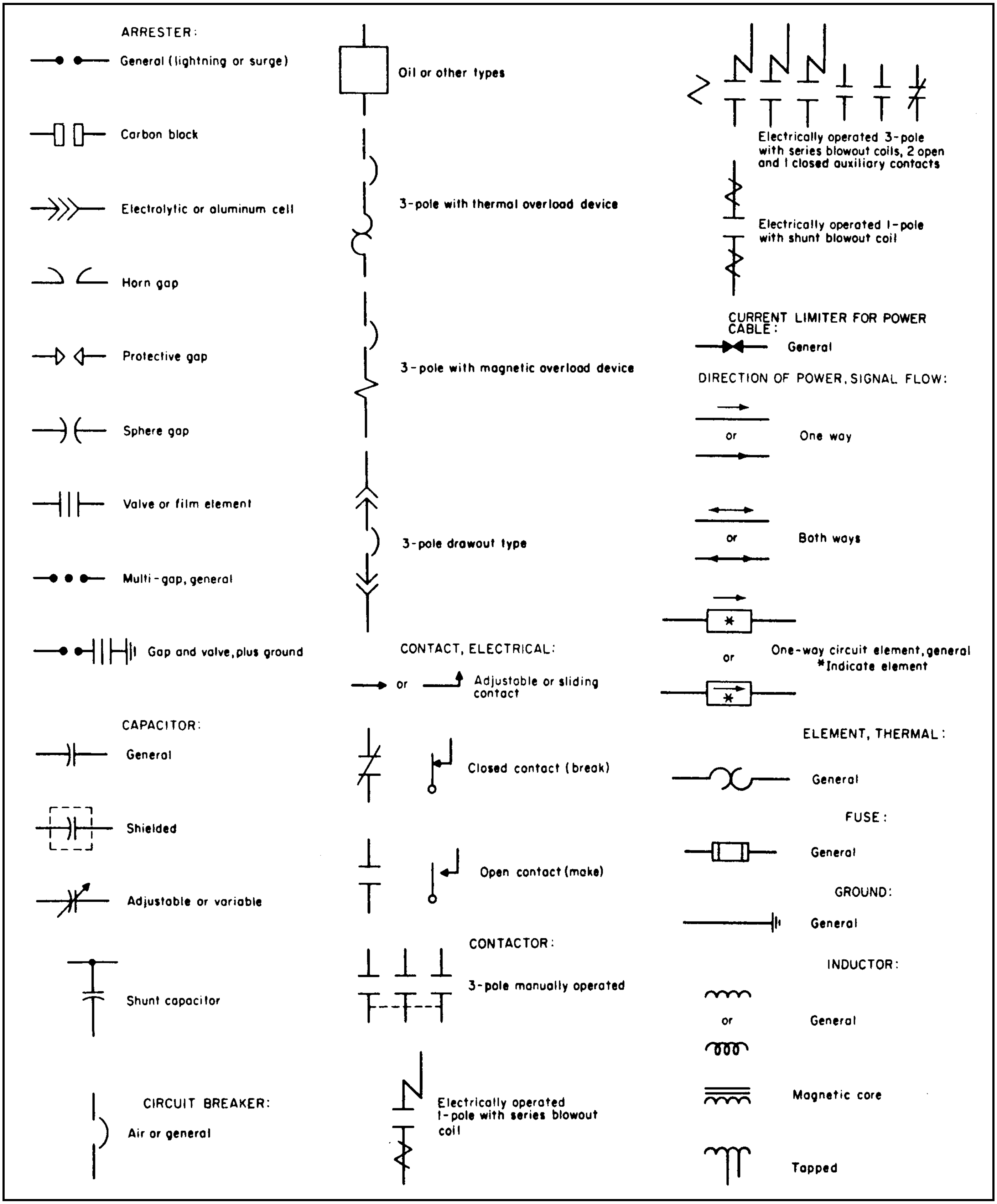

FIG. 18-27 (Cont'd)

Graphical Symbols for One-Line Electrical Diagrams

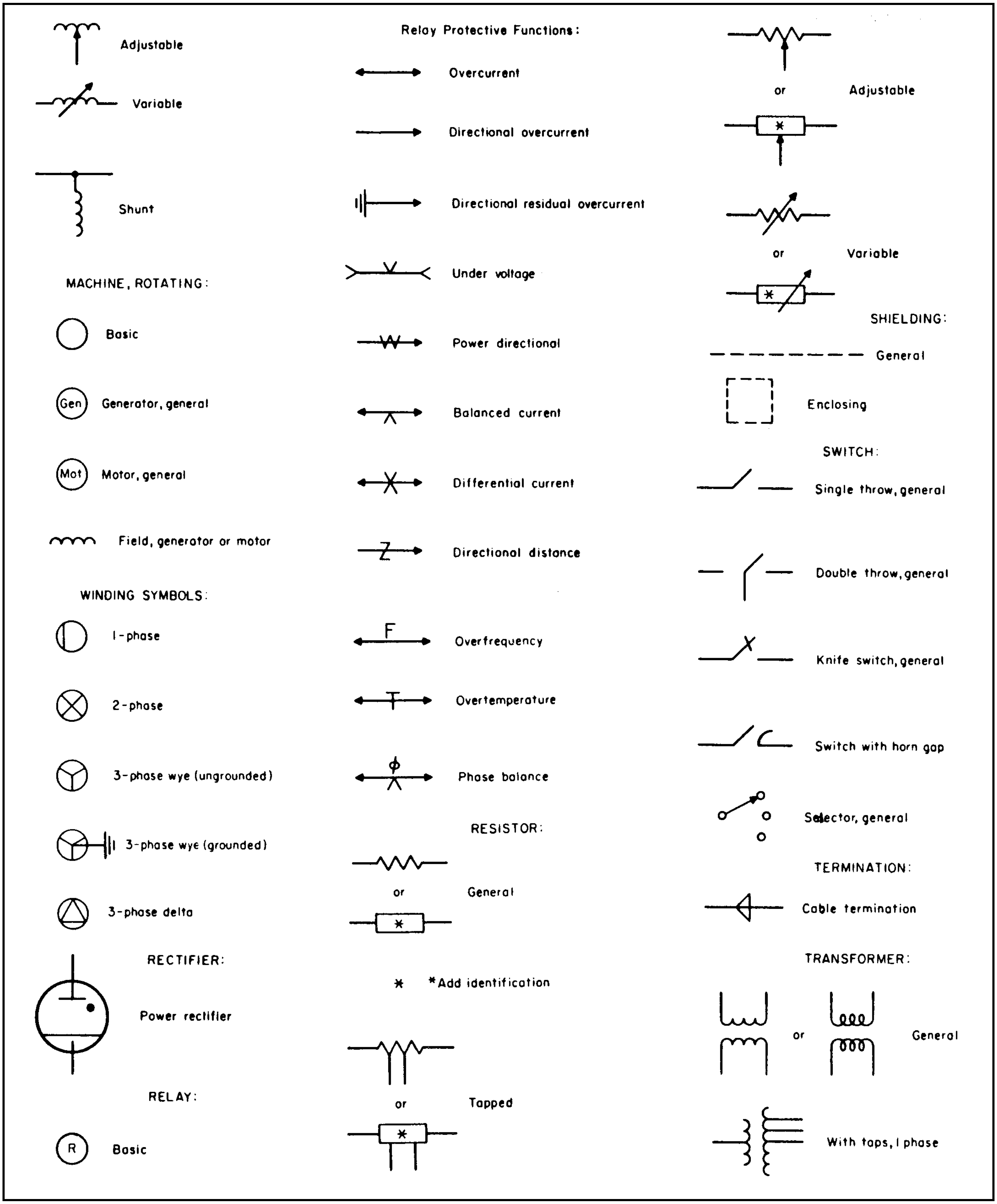

FIG. 18-27 (Cont'd)

Graphical Symbols for One-Line Electrical Diagrams

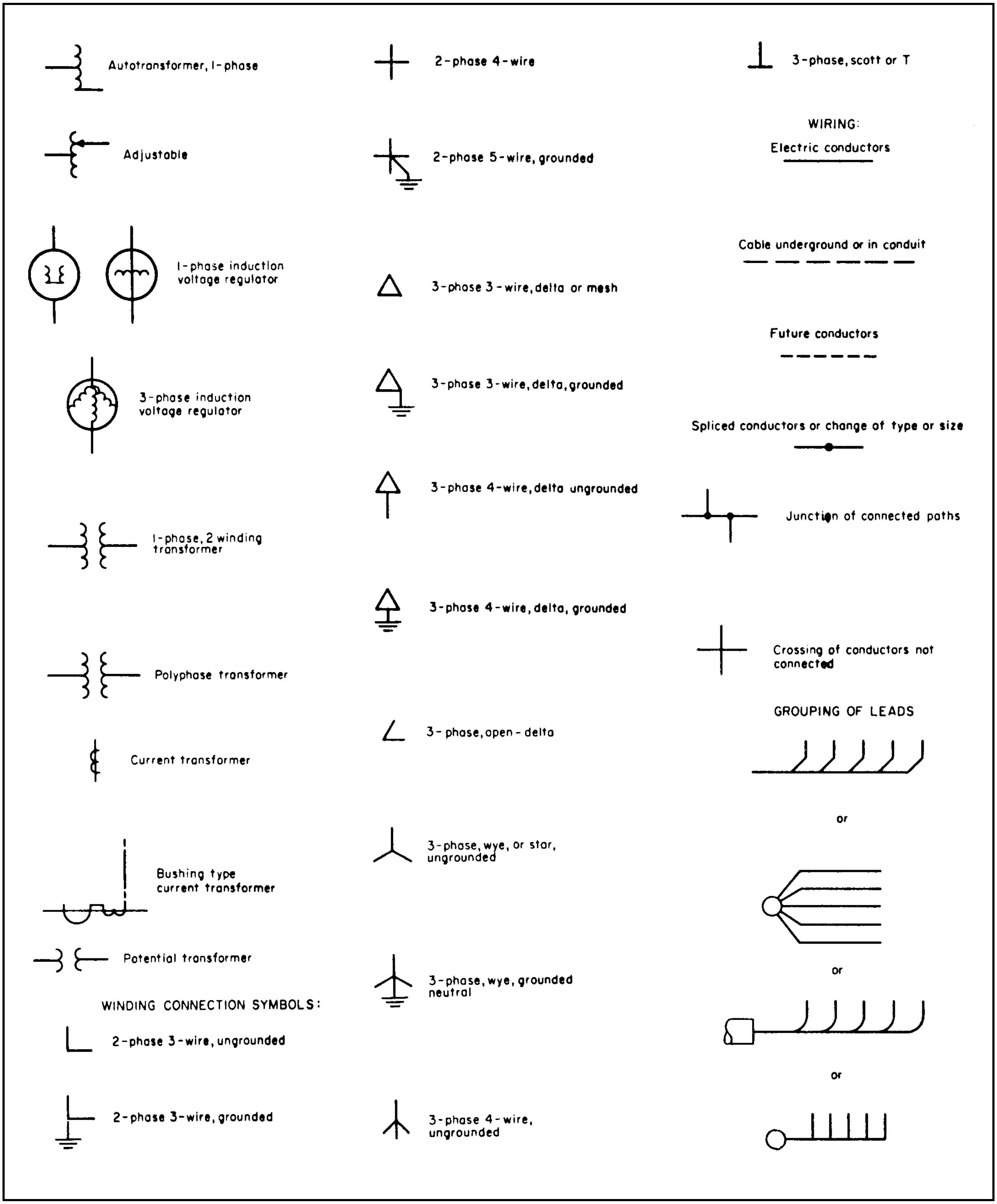

FIG. 18-28

Example Electrical Power System One-Line Diagram

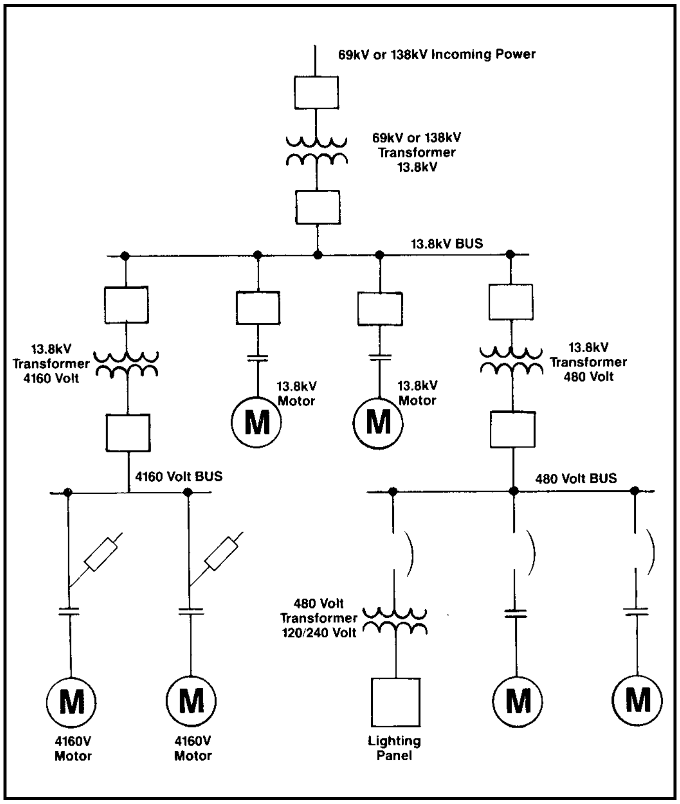

FIG. 18-29

Transformer Connection Schematics

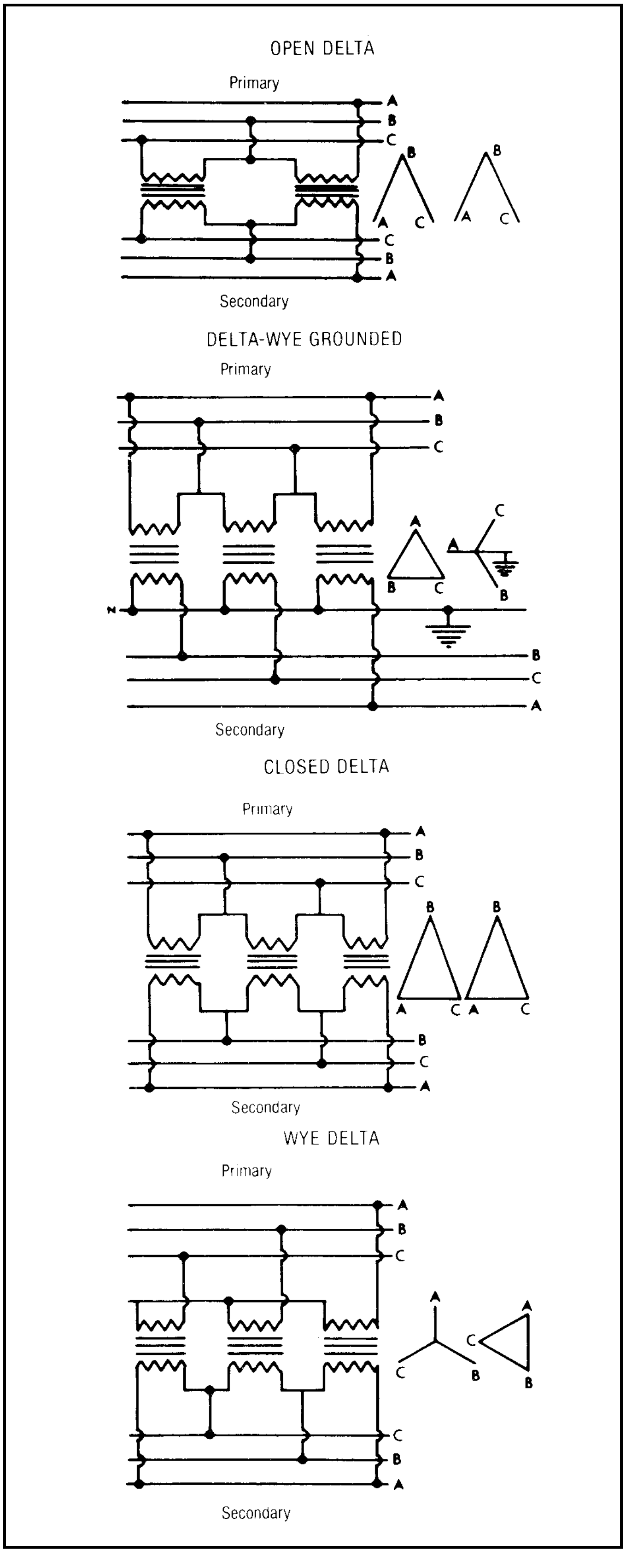

High Fire Point Liquid-Insulated Transformers — Transformers insulated with listed less-flammable liquids shall be permitted to be installed without a vault in noncombustible occupancy areas of noncombustible buildings, provided there is a liquid confinement area and the minimum clearances required by the heat release rates of the listed liquid are maintained.

Such indoor transformer installations not meeting the clearance requirements of the liquid listing, or installed in combustible buildings or combustible occupancy areas, shall be provided with an automatic fire extinguishing system or shall be installed in a vault.

For purposes of this section, a less-flammable liquid is one with a fire point not less than 300°C. Fire point is defined by ASTM D92-72.

Nonflammable Fluid-Insulated Transformers — Transformers insulated with a dielectric fluid identified as nonflammable shall be permitted to be installed indoors or outdoors.

For the purpose of this section, a nonflammable dielectric fluid is one which does not have a flash point or fire point, and is not flammable in air.

Oil-Insulated Transformers — Oil-insulated transformers installed indoors shall be installed in a vault.

Exceptions:

- Where the nominal voltage does not exceed 600, a vault shall not be required if suitable arrangements are made to prevent a transformer oil fire from igniting other materials, and the total capacity in one location does not exceed 10 kVA in a section of the building classified as combustible, or 75 kVA where the surrounding structure is classified as fire-resistant construction.

- Transformers shall be permitted to be installed in a detached building if neither the building nor its contents presents a fire hazard to any other building or property, and if the building is used only in supplying electric service and the interior is accessible only to qualified persons.

Outdoors

Dry-type Transformers — Dry-type transformers installed outdoors shall have a weatherproof enclosure.

Transformers exceeding 112½ kVA shall not be located within 12 in. (305 mm) of combustible materials of buildings.

Oil-Insulated Transformers — Combustible material, combustible buildings, and parts of buildings, fire escapes, and door and window openings shall be safeguarded from fires originating in oil-insulated transformers installed on roofs, attached to, or adjacent to a building or combustible material.

Space separations, fire-resistant barriers, automatic water spray systems, and enclosures that confine the oil or a ruptured transformer tank are recognized safeguards. One or more of these safeguards shall be applied according to the degree of hazard involved in cases where the transformer installation presents a fire hazard. Transformers installed on poles or structures or underground shall conform to the National Electrical Safety Code (ANSI C2-1984).

MOTOR CONTROLS

Protective Devices

Motor Protection — The basic type of motor, its size, and service to which it is applied, will have a large influence on the system of protection used. The hazards for which protection is applied to induction motors are:

- Short circuits in the motor windings or branch circuits.
- Overloads or locked rotor.
- Reduction or loss of supply voltage.
- Phase unbalance.
- Phase reversal.
- Line surge.

Actually, several of these hazards will result in an overload condition. Locked rotor is a severe overload condition. Reduced voltage may result in an overload. Also, unbalanced phase voltage or single-phasing results in overload. The overload protection employed, therefore, will also give some degree of protection from these hazards, depending on the motor and transformation connections.

Therefore, overload and short circuit protection is all that is provided for a large percentage of induction motors.

Several types of overload protective devices (Fig. 18-30), are used: the replica type, such as thermal bi-metallic relays, is the most commonly used to protect small and medium sized motors. For induction motors, rated up to 30 hp, there is no particular problem of matching the thermal relay characteristics with the motor capability.

Above 30 hp, more care should be exercised in selecting overload relays to be sure that adequate protection is provided. The rotor circuit, rather than the stator winding of large motors, particularly high speed motors, may be the limiting part.

Short Circuit Protection — The branch circuit overcurrent protection device is used for the purpose of protecting against short circuits and grounds that produce short-circuit currents. It is not necessarily sized to provide running overcurrent protection for the branch circuit, as this function is provided by the motor-running overcurrent device.

When using inherent type of protectors which operate on the basis of temperature, particular attention should be given to selecting the rating of the branch circuit overcurrent protection device to obtain running protection.

Available short-circuit protection for faults in any branch circuit can readily be calculated. If the available fault current should exceed the interrupting capacity of the motor branch circuit overcurrent protective device normally used, there are several solutions:

- Use the scheme of cascading the motor branch circuit-protecting device with the feeder circuit overcurrent-protecting device. (Use with caution.)
- Install current-limiting fuses in the feeder serving the motor branch circuit. (Use with caution.)

FIG. 18-30

Motor Feeder and Branch Circuits (Based on 1984 NEC Diagram 430-1)

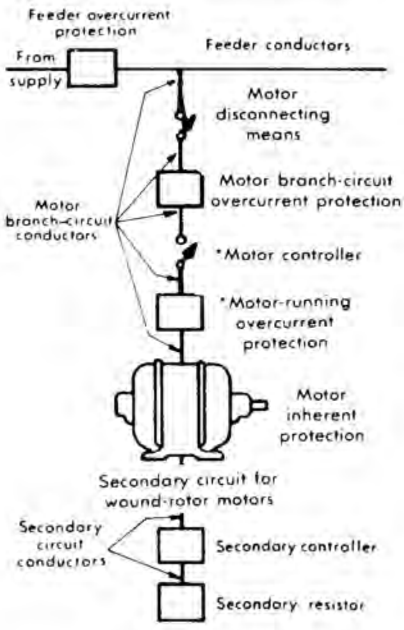

• Usually mounted in the same case

- Install current-limiting reactors in the feeder circuit.
- Use higher-than-normal interrupting-capacity-motor branch circuit breakers.
- Install current-limiting fuses in combination with molded case breakers.
- Reduce the size of transformer serving the motor bus or use a high-impedance transformer.

Controllers

Ratings — As shown in Fig. 18-31, NEMA has established horsepower ratings for manual and magnetic controllers in low voltage (600 volts and below) sizes. High voltage sizes to 5000 volts are also established, but are not shown here. These ratings change for duties other than continuous duty, such as: jogging, plug stopping, control of constant-horsepower multiple-speed motors, part winding, and reduced-voltage starting.

Starting Methods — When voltage is applied to a squirrel cage motor, it may be compared to energizing a transformer with the secondary short circuited. As the motor comes up to speed, the rotor back emf causes a reduction in line currents and a corresponding rise in motor terminal voltage. The motor torque available is proportional to the square of the terminal voltage; hence, terminal voltage, load torque, and total angular momentum must be considered when determining the starting method to be used and whether a motor will start.

When the motor is small in comparison to the system, across-the-line starting may be used. Where voltage sensitive loads are present in the system or when a motor exceeds 15 to 25% of the system capacity, reduced voltage starting is likely to be required.

Reduced voltage starting isolates the high starting requirements of a motor from the system and reduces these requirements by lowering the motor terminal voltage. Since the motor torque drops off as the square of the voltage, starting and acceleration problems may develop. A detailed analysis of motor starting is recommended for all large reciprocating compressors and large pumps and compressors that are to be started while fully loaded.

Electrical Control Devices

There are two basic motor control schemes for controlling process equipment as shown in Fig. 18-32. They are two-wire control and three-wire control. The two-wire control device could be a hand switch, thermostat, float switch, limit switch, or other maintained contact device. When the contacts of the control device close, they complete the coil circuit of the starter, causing it to pick up and connect the motor to the line. When the control device opens, the starter is de-energized, stopping the motor.

Two-wire control provides low voltage release, but no low voltage protection. Depending upon the nature of the control device, the starter will function automatically in response to the direction of the control device without the attention of an operator. After a power dip or power outage, restoration of power will cause process equipment to restart if the control device is closed at that time. Consequently, the demand on the supply and distribution system may be excessive.

A three-wire control circuit uses momentary contact start-stop buttons and a holding circuit interlock, wired in parallel with the start button, to maintain the circuit.

Pressing the N.O. start button completes the circuit to the coil. The power circuit contacts close, completing the circuit to the motor and the holding circuit contacts (mechanically linked with the power contacts) also close. Once the starter has picked-up, the contacts provide an alternate current path around the reopened start contacts.

Pressing the N.C. stop button will open the circuit to the coil, causing the starter to drop-out. An overload condition which causes the overload contact to open, a power failure, or a drop in voltage to less than seal-in value would also de-energize the starter. When the starter drops out, the interlock contact reopens, and both current paths to the coil, through the start button and the interlock, are now open.

FIG. 18-31

Ratings for Single-Speed Full-Voltage Magnetic Controllers for Nonplugging and Nonjogging Duty
(Based on NEMA ICS 2-321B, May 1974)
Horsepower Ratings

Size of Controller	Continuous Current Rating,* Amperes	Three-Phase Horsepower † at				Single-Phase Horsepower at 60 Hertz	
		60 Hertz		50 Hertz	60 Hertz		
		200 Volts	230 Volts	380 Volts	460 or 575 Volts	115 Volts	230 Volts
00	9	1½	1½	1½	2	⅓	1
0	18	3	3	5	5	1	2
1	27	7½	7½	10	10	2	3
1P	36	–	–	–	–	3	5
2	45	10	15	25	25	3	7½
3	90	25	30	50	50	–	–
4	135	40	50	75	100	–	–
5	270	75	100	150	200	–	–
6	540	150	200	300	400	–	–
7	810	–	300	–	600	–	–
8	1215	–	450	–	900	–	–
9	2250	–	800	–	1600	–	–

kW= 0.746 x hp *See ICS 2-321 A.20 † Based on locked rotor current ratings given in Table ICS 2-327B-1

To guard against nuisance shutdowns, a time-delay undervoltage device (TDUV) can be added in addition to the mechanical interlock around the N.O. momentary start push button. This will restart the process equipment within a three to four second time interval to avoid shutdown on a power dip, but it will need to be restarted after a power failure.

A maintained contact control device is one which when operated will cause a set of contacts to open (or close) and stay open (or closed) until a deliberate reverse operation occurs. A conventional thermostat is a typical maintained contact device. Maintained contact control devices are used with 2-wire control systems.

A standard push button is a typical momentary contact control device. Pushing the button will cause N.O. contacts to close and N.C. contacts to open. When the button is released, the contacts revert to their original state. Momentary contact devices are used with 3-wire control or jogging service.

FIG. 18-32

Typical 2 and 3 Wire Control Wiring Diagrams

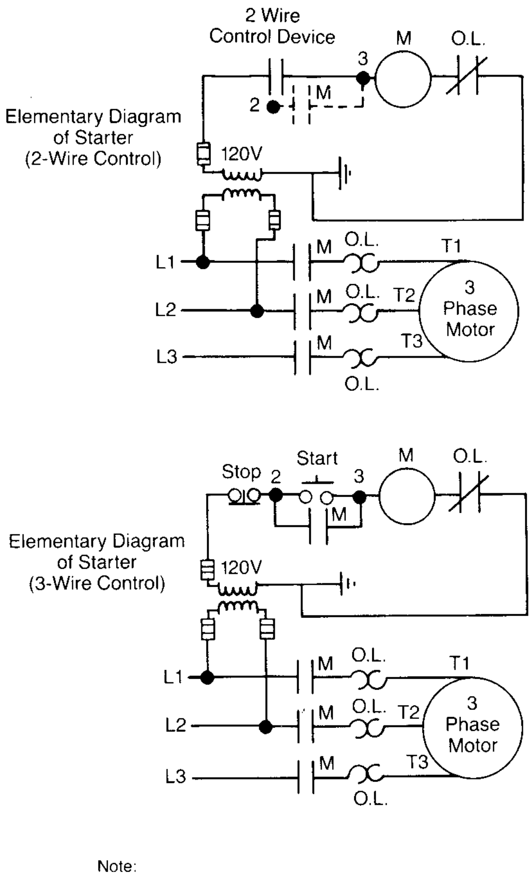

Note:
L = Load
M = Motor Contactor in Coil (Contacts)
O.L. = Overload

Power Factor Correction

Capacitors can be installed to reduce the cost of reactive power, to release system capacity, to relieve overload, and to improve voltage. The effects of adding capacitors are: reduction of the lagging component of current, increased power factor at the source, decreased kVA demand, reduction in the I^2R losses, and a consequent reduction of the purchased power costs.

When capacitors are applied for overall plant power factor correction and primarily for their effect on power costs, they are usually located near the service entrance. If there is a large variation in power factor due to varying loads, a series of capacitor banks may be installed to turn on and off automatically as required by means of power factor relays.

Group correction, with capacitors installed at each load center, is usually the most practical method. This takes advantage of the load diversity factor and provides the most effective correction for a given amount of kVA. It serves to reduce feeder losses and to improve voltage regulation.

Individual correction can be applied to motors with the capacitors located at the motor terminals and switched on and off with the motor. Caution must be exercised, however, in the application of individual capacitors, especially on motors driving high inertia loads which may cause a motor to run a relatively long time after power is cut off. The capacitor is an excitation source to the motor and could cause a dangerously high induced voltage immediately after shutdown. The danger would be if the line switch were reclosed at the time when the induced voltage would be out of phase with the line voltage.

If the plant in question has its own generating equipment and the power factor of the load is less than 0.8 lagging, it may be advisable to correct to approximately 0.9 to prevent excessive voltage drops on feeders, excessive I^2R losses, and reduction in generator capacity.

It is impractical to make any general recommendations on power factor correction when there are large variations in load conditions because severe overvoltages can result with an excess of capacitors on a lightly loaded bus. Therefore, it is suggested that if there is a low power factor problem, a study of the plant system be made with consideration given to the many intangible advantages and variables. A good knowledge of the basics of power factor will facilitate such a study.

LIGHTING

Lighting Sources

Various types of light sources are available, depending on the quantity and quality of the light desired. The most commonly used sources are fluorescent (usually limited to interior spaces), mercury vapor, metal halide, and high pressure sodium. Of all the currently used sources, high pressure sodium is the most efficient in terms of lumens (source intensity) per watt.

For determining lighting levels, see the Illuminating Engineering Society of American Handbook; see also Fig.18-33.

ELECTRICAL HEAT TRACING

The most common type of electrical heat trace materials is the resistance type heat cable. The resistive material in the heat cable is generally nichrome wire. The nichrome wire

FIG. 18-33

Suggested Lighting Levels
(Based on API RP 540 1974)

Location	In-Service Footcandle Level
Walkways, stairways	3
Operating platforms	3
Toilets and washrooms	10
Warehouse	5-30
Compressor building	20-25
Maintenance area	15-50
Boiler house	20
Control room	
General	30
Console desk	30
Panel	30
Back of panel	10
Switch Room	30
Laboratories and office, general	30-50
Business machine operation	50
Outdoor areas	
General	1
Cooling towers, tanks, etc.	3
Switchyards	2

comes into contact with the bus wires (one hot and one neutral) at predetermined intervals along the length of cable. The nichrome wire creates heat (I^2R) as current passes through it. A temperature switch is used to turn the heat trace on and off as the temperature drops close to the solidification point of the substance to be kept from freezing.

Another type of heat trace cable is the current limiting type cable. Similar to the resistive cable, the current limiting cable uses a resistive material to generate its heat, but with a special property or alloy in the material such that the current is limited in proportion to the change in temperature. As temperature increases, the resistance of the heat element increases. Since

$$I = \frac{V}{R}$$

as R increases, I decreases. If temperature decreases, so does R which leads to an increase in I.

A third type of electric heat trace is the skin effect type used for heating long lengths of pipe. Lengths of 10 miles or more can be heated uniformly, at a continuous rate and from one power source, using the skin effect method. This type of heat trace is associated with pipelines and is not generally used in a plant environment.

STAND-BY POWER

The use of back-up or stand-by power systems in gas processing plants is needed in the event there is a power dip or a complete failure in the primary AC power source.

There are two types of back-up systems in general use, the Uninterruptible Power Supply (UPS) system and the standby generator system. The UPS system generally consists of a rectifier/battery charger, battery, DC to AC inverter, and transfer or bypass switch. The output of the inverter supplies regulated, transient-free (uninterrupted) power to critical loads such as plant control systems (Section 4). The amount of battery back-up or time back-up is user specified. The battery bank could be sized to carry the load through a power dip, through a shutdown sequence, or until an alternate power supply system (such as an engine driven generator) is brought on line. Where it is crucial for a plant or parts of a plant to continue operating, a standby generator system is used to drive heavier loads such as motors and lighting systems. These standby generators can take from seconds to minutes to be brought on line.

PROGRAMMABLE CONTROLLERS

A Programmable Logic Controller (PLC) is a solid-state device designed to perform logic decision making for industrial control applications. The PLC can be used as a direct replacement for relays or solid-state electronics in an industrial environment. See Section 4 for detailed discussion.

GROUNDING

Equipment Grounding

Equipment grounding is one of the most important factors in safety to personnel in industrial plants. It covers the connecting to ground of non-current-carrying metal parts such as motor-control centers, motor frames, switchgear, metal raceways, building steel, etc.

Equipment grounding is installed to limit potential between non-current-carrying parts and between these parts and earth, to a safe value under normal and abnormal operating conditions.

To ensure this condition, all parts of structure and apparatus are metallically connected to the plant grounding system, thus placing all at the same potential, as well as to place personnel at the same potential, at all times.

System Grounding

A system ground is the grounding of one of the current carrying leads to earth. There are many variations of ground systems from solid grounding to impedance grounding.

A study should be made before selecting a particular system giving consideration to voltage level, service continuity, etc. Equipment grounding is separate from system grounding. Both are required to provide adequate protection.

Grounding Principles

A study of grounding indicates that it requires more than just good ground rods to ensure low-resistance ground. The conductance of soils, especially subsoils, is an important factor in ground resistance, and this conductance can vary through a rather wide range.

The various factors which affect the conductance of soil or the resistance of a ground are the chemical ingredients, the amount of moisture in the soil, and type of soil. Resistance values may range from 2 ohms to as much as 3,000 ohms. A desirable value should be less than 25 ohms.

Earth temperature also has an effect on resistivity. As the water in the soil freezes and the temperature drops, the resistivity rises, and the resistance of the ground connection is increased.

Ground Resistivity Test

Ground-resistance measurements are usually made with self-contained direct reading instruments. These meters require two auxiliary grounds when making the measurements.

CATHODIC PROTECTION

Cathodic protection is a means of reducing or preventing destructive corrosion which results from galvanic or electrochemical attack. The most familiar galvanic or electro-chemical corrosion occurs when two dissimilar metals are in contact in the presence of an electrolyte. This forms a galvanic couple which is short-circuited on itself through the electrolyte. The metal of higher potential becomes the anode which goes into solution in the electrolyte, and therefore corrodes. The electrolyte needs to be only rainwater with impurities dissolved from the air, the ground, or the surface of the metal itself.

The principal method of minimizing corrosion is to isolate the metal from its environment by means of an envelope of more corrosion-resistant material: paint, organic coatings, or electro-deposits. If electro-deposits of metals are used, and if the deposited metal is less noble than the base is, zinc on steel for example, the zinc protects the steel galvanically, by so-called sacrificial action. It becomes the anode and the steel becomes the cathode of the galvanic cell, and the steel does not corrode until all the zinc in its immediate neighborhood is consumed.

Underground pipes and cables are corroded by electrolytic action from unidirectional electric currents in the ground. These currents may result from galvanic couples in the ground or many other causes. One way to reduce these currents from electrical equipment is by reducing the electric resistance of the metal and thus increasing the resistance of the ground circuit. The method of widest use is by the application of an external source of DC voltage. In doing this, the underground metal to be protected becomes lower in potential than the surrounding soil, and thus becomes a cathode instead of an anode. Usually if the pipe or other metallic structure is 0.25 to 0.30 V negative to the soil or liquid surrounding the pipe, corrosion is prevented.

This voltage is obtained by using small generators, batteries, or rectifiers. The negative lead is connected to the metal structure to be protected; and the positive lead, to a ground some distance away. Another means is to sink magnesium or zinc rods in to the ground and externally connect them to the pipe. They protect the pipe in a sacrificial manner, since they become an anode to the pipe. Due to varying conditions, such as size of pipe, type and condition of protective coatings, and resistance and chemical conditions of the soil, it is not possible to calculate the number of units that will be required. It has been found that one unit may protect anywhere from one-fourth mile of bare pipe to as much as 20 miles of well coated line. One method to determine the number required is to install temporary units at various intervals along the pipeline until the proper voltage level is achieved between the pipe and ground.

BUILDING AND AREA CLASSIFICATION

For methods of determining classification of building and areas in hydrocarbon plants, refer to the latest edition of API-RP-500 for the proper application of electrical equipment and material and the latest edition of NEC Section 500.

Types of Hazardous Classified Locations

Class I — Locations in which flammable gases or vapors are or may be present in air in quantities sufficient to produce an explosion or ignition.

Class II — Locations in which combustible dusts may be present.

Class III — Locations in which combustible fibers or flyings may be present.

Hazardous Gases

Hazardous locations are divided into these groups, based on atmospheric contaminant:

Group A — Atmospheres that may contain acetylene.

Group B — Atmospheres that may contain hydrogen, such as manufactured gases with more than 30 vol % hydrogen.

Group C — Atmospheres that may contain ethyl ether vapors, ethylene, cyclopropane, carbon monoxide, hydrogen sulfide, and others.

Group D — Atmospheres that may contain vapors of hydrocarbons and natural gas, alcohols, ketones, solvents, ethers, esters, and others.

Group E — Atmospheres that may contain dust of aluminum, magnesium, or similar metals and alloys.

Group F — Atmospheres that may contain carbon black, coal, or coke dust.

Group G — Atmospheres that may contain flour, starch, or grain dusts.

Hazardous Divisions

Hazardous location Classes and Groups are subdivided into Divisions 1 or 2, based on the probability of an ignitable mixture being present in the atmosphere.

Class I, Division 1 areas are locations in which one of these conditions exists:

- Ignitable concentrations of flammable gases or vapors exist under normal operating conditions.
- Ignitable concentrations of such gases or vapors may exist frequently because of repair or maintenance operations or because of leakage.
- Breakdown or faulty operation of equipment or processes might release ignitable concentrations of flammable gases or vapors and at the same time cause simultaneous failure of the electrical equipment.

All electrical equipment, fittings, and wiring materials in a Class I, Division 1 area shall be explosion-proof and suitable for the atmospheric group designation. Seal fittings are installed in conduit and cable systems to prevent the passage of gases, vapors, or flames from one portion of the electrical installation to another through the conduit. Such communication through Type MI cable is inherently prevented by construction of the cable.

Class I, Division 2 areas are locations in which one of these conditions exists:

- Flammable liquids or flammable gases are handled, processed, or used, but in which the liquids, vapors, or gases will normally be confined within closed containers or closed systems from which they can escape only in case of accidental rupture or breakdown of such containers or systems, or in case of abnormal operation of equipment.

- Ignitable concentrations of gases or vapors are normally prevented by positive mechanical ventilation and which might become hazardous through failure or abnormal operation of the ventilating equipment.
- The area is adjacent to a Class I, Division 1 location, and to which ignitable concentrations of gases or vapors might occasionally be communicated unless such communication is prevented by adequate positive pressure ventilation from a source of clear air, and effective safeguards are provided against ventilation failure.

All electrical equipment, fittings, and junction boxes in a Class I, Division 2 area need not always be explosion-proof. All arcing devices, however, shall be hermetically sealed or shall be installed in explosion-proof enclosures suitable for the atmospheric group designation. Lighting fixtures may be of the enclosed and gasketed type if the lamp temperature of the fixture being considered does not exceed 80% of the ignition temperature of the gas or vapor likely to be present in the atmosphere. Otherwise the fixtures must be explosion-proof. See the National Electrical Code, Section 501 for more explicit information regarding wiring rules in Class I, Division 2 locations.

Purging/Pressurization

Through the exercise of ingenuity in the layout of electrical installations for hazardous (classified) locations, it is frequently possible to locate much of the equipment in less hazardous or in nonhazardous locations and thus to reduce the amount of special equipment required. In some cases, hazards may be reduced or hazardous (classified) locations limited or eliminated by a purging/pressurization system.

For hazardous locations, sealed cast enclosures or sheet metal enclosures with pressurization may be used. As a typical example, if an installation had many electronic instruments that could be enclosed in a single sheet metal enclosure, the installation would lend itself to the purging/pressurization system. However, if the instruments, due to their nature, had to be installed in separate enclosures, then the cast, hazardous location housing would almost invariably prove more economical. Pressurized enclosures require:

- A source of clean air or inert gas.
- A compressor to maintain the required pressure on the system.
- Pressure control valves, to prevent the power from being applied before the enclosures have been purged, and to de-energize the system should pressure fall below a safe value.

In addition, door-interlock switches are required to prevent access to the equipment while the circuits are energized. It can readily be seen that all of these accessories can add up to a considerable expenditure.

For further information, see Purged and Pressurized Enclosures for Electrical Equipment in Hazardous Location, ANSI/NFPA 496-1982.

Intrinsically Safe Design

Equipment and associated wiring approved as intrinsically safe shall be permitted in any hazardous (classified) location for which it is approved, and the provisions of NEC Articles 500 through 517 shall not be considered applicable to such installation.

Abnormal conditions shall include accidental damage to any field-installed wiring, failure of electrical components, application of overvoltage, adjustment and maintenance operations, and other similar conditions.

The use of intrinsically safe equipment is primarily limited to process control instrumentation, since these electrical systems lend themselves to the low energy requirements.

For further information, see Intrinsically Safe Apparatus and Associated Apparatus for Use in Class I, II, and III, Division I Hazardous Locations, NFPA 493-1978 (ANSI) and Installation of Intrinsically Safe Instrument Systems in Class I Hazardous Locations (ANSI/ISA RP 12.6-1976).

Need for Classification

The need for classification is indicated by an affirmative answer to one of these questions:

- Is the presence of flammable liquids or vapors having flash points less than 70°F likely?
- Are any flammable liquids or vapors having flash points under 200°F likely to be handled, processed, or stored at temperatures above their flash points?
- For a more detailed explanation see the API RP-500A.

NEMA ENCLOSURES

Type 1 – General Purpose

A general-purpose enclosure is intended primarily to prevent accidental contact with the enclosed apparatus. It is suitable for general-purpose applications indoors where it is not exposed to unusual service conditions.

A Type 1 enclosure serves as a protection against dust and light indirect splashing, but is not dust tight.

Type 2 – Drip Proof – Indoors

A driptight enclosure is intended to prevent accidental contact with the enclosed apparatus and, in addition, is so constructed as to exclude falling moisture or dirt, but is not dust tight.

Type 2 enclosure is suitable for application where condensation may be severe, such as is encountered in cooling rooms and laundries.

Type 3 – Dust Tight, Rain Tight, and Sleet (Ice) Resistant – Outdoor

A weather-resistant enclosure is intended to provide suitable protection against specified weather hazards. It is suitable for use outdoors.

A Type 3 enclosure is suitable for application outdoors, if ice is not a serious problem.

Type 3R – Rain Proof, Sleet (Ice) Resistant – Outdoor

An outdoor enclosure designed to protect against rain. It is not dust tight, snow, or sleet (ice) proof.

Type 3S – Dust Tight, Rain Tight, and Sleet (Ice) Proof – Outdoor

An outdoor enclosure designed to protect against dust and water and to operate covered with ice or sleet.

Type 4 – Water Tight and Dust Tight

An enclosure so designed that there will be no leakage of water into the enclosure under a specified hose test.

A Type 4 enclosure is suitable for application outdoors on ship docks, and in dairies, breweries, etc.

Type 4X – Water Tight, Dust Tight, and Corrosion Resistant

A Type 4 enclosure that is also corrosion resistant.

Type 6 – Submersible

Type 6 enclosures are intended for indoor or outdoor use primarily to provide a degree of protection against the entry of water during occasional temporary submersion at a limited depth. They are not intended to provide protection against conditions such as internal condensation, internal icing, or corrosive environments.

A Type 6 enclosure is suitable for application where the equipment may be subject to submersion, as in quarries, mines, and manholes. The design of the enclosure will depend upon the specified conditions of pressure and time. It is also dust tight and sleet (ice) resistant.

Type 7 (A, B, C, or D) Hazardous Locations – Class I Air Break

These enclosures are designed to meet the applicable requirements of the National Electrical Code for Class I hazardous locations which may be in effect. In this type of equipment, the circuit interruption occurs in air.

Specifically note that Type 7 (explosion-proof) enclosures and their associated conduit systems are neither gas nor liquid tight. Consequently, corrosive gases such as hydrogen sulfide and water from rain or internal condensation can accumulate within the enclosure. Premature failure of electrical devices and interconnections often results when preventative measures such as drains, air purges, and dual rated enclosures are not used to remove or exclude these corrosive elements.

Type 8 (A, B, C, or D) Hazardous Locations – Class I Oil Immersed

These enclosures are designed to meet the application requirements of the National Electrical Code for Class I hazardous locations which may be in effect from time to time. The apparatus is immersed in oil.

Type 9 (E, F, or G) Hazardous Locations – Class II

These enclosures are designed to meet the application requirements of the National Electrical Code for Class II hazardous locations which may be in effect.

The letter or letters following the type number indicates the particular group or groups of hazardous locations (as defined in the National Electrical Code) for which the enclosure is designed. The designation is incomplete without a suffix letter or letters.

Type 10 – Bureau of Mines – Explosion Proof

A Type 10 enclosure is designed to meet the explosion proof requirements of the U.S. Bureau of Mines which may be in effect. It is suitable for use in gassy coal mines.

Type 11 – Acid and Fume Resistant – Oil Immersed

A Type 11 enclosure is suitable for application indoors where the equipment may be subject to corrosive acid or fumes, as in chemical plants, plating rooms, sewage plants, etc. The apparatus is immersed in oil.

Type 12 – Industrial Use

A Type 12 enclosure is designed for use in those industries where it is desired to exclude such materials as dust, lint fibers and flyings, oil seepage, or coolant seepage.

Type 13 – Oil Tight and Dust Tight – Indoor

An indoor enclosure for pilot devices such as limit switches, selector switches, foot switches, push buttons, and pilot lights for protection against lint, dust seepage, external condensation, and spraying of water, oil, or coolant.

PLANT SPACING GUIDELINES

Plant layout applies to the spacing of both process units and process equipment within a facility. Industrial Risk Insurers published guidelines for plant layout and spacing which are used extensively in the Gas Processing Industry. These tables shown in Fig. 18-34 through 18-36 can be used as a guideline for plant and equipment spacing. The ultimate decision on a layout should be a combination of industry experience and risk assessment.

FIG. 18-34

Interunit Spacing Guidelines

	Service Buildings	Motor Control Centers And Electrical Substations	Utilities Areas	Cooling Towers	Control Rooms	Compressor Buildings	Large Pump Houses	Process Units Moderate Hazard	Process Units Intermediate Hazard	Process Units High Hazard	Atmospheric Storage Tanks	Pressure Storage Tanks	Refrigerated Storage Tanks Dome Roof	Flares	Unloading And Loading Racks	Fire Water Pumps	Fire Stations
Service Buildings	/																
Motor Control Centers And Electrical Substations	/	/															
Utilities Areas	50	50	/														
Cooling Towers	50	50	100	50 ①													
Control Rooms	/	/	100	100	/												
Compressor Buildings	100	100	100	100	100	30											
Large Pump Houses	100	100	100	100	100	30	30										
Process Units Moderate Hazard	100	100	100	100	100	30	30	50									
Process Units Intermediate Hazard	200	100	100	100	200	50	50	100	100								
Process Units High Hazard	400	200	200	200	300	100	100	200	200	200							
Atmospheric Storage Tanks	250	250	250	250	250	250	250	250	300	350	*						
Pressure Storage Tanks	350	350	350	350	350	350	350	350	350	350	*	*					
Refrigerated Storage Tanks Dome Roof	350	350	350	350	350	350	350	350	350	350	*	*	*				
Flares	300 ②	300	300	300	300	300	300	300	300	300	300	400	400	/			
Unloading And Loading Racks	200	200	200	200	200	200	200	200	200	300	250	350	350	300	50		
Fire Water Pumps	50	50	50	50	50	200	200	200	300	300	350	350	350	300	200	/	
Fire Stations	50	50	50	50	50	200	200	200	300	300	350	350	350	300	200	/	/

1 ft = 0.305 m
/ = no spacing requirements
*** = spacing given in Fig. 18-39**

Examples:

① 50 ft separation between two cooling towers

② 300 ft separation between service building and flare

Excerpted from GE GAP Guidelines 2.5.2.
Reprinted with permission from GE Global Asset Protection Services.
Original Copyright March 1990.

FIG. 18-35

Intra-Unit Spacing Guidelines

Compressors	30														
Intermediate Hazard Pumps	30	5													
High Hazard Pumps	50	5	5												
High Hazard Reactors	50	10	15	25											
Intermediate Hazard Reactors	50	10	15	25	15										
Moderate Hazard Reactors	50	10	15	25	15	15									
Columns, Accumulators, Drums	50	10	15	50	25	25	15								
Rundown Tanks	100	100	100	100	100	100	100	100							
Fired Heaters, Incinerators, Oxidizers	50	50	50	50	50	50	50	100	25						
Air Cooled Heat Exchanger	30	15	15	25	15	15	15	100	50	/					
Heat Exchangers	30	10	15	25	15	10	10	100	50	15	5				
Pipe Racks	30	10	15	25	15	10	10	100	50	/	10	/			
Emergency Exchangers	50	50	50	100	50	50	50	100	50	50	50	50	/		
Unit Block Valves	50	50	50	100	50	50	50	100	50	50	50	50	/	/	
Analyzer Rooms	50	50	50	50	50	50	50	100	50	50	50	50	/	/	/

1 ft = 0.305 m
/ = no spacing requirements

Excerpted from GE GAP Guidelines 2.5.2.
Reprinted with permission from GE Global Asset Protection Services.
Original Copyright March 1990.

FIG. 18-36

Storage Tank Spacing Guidelines

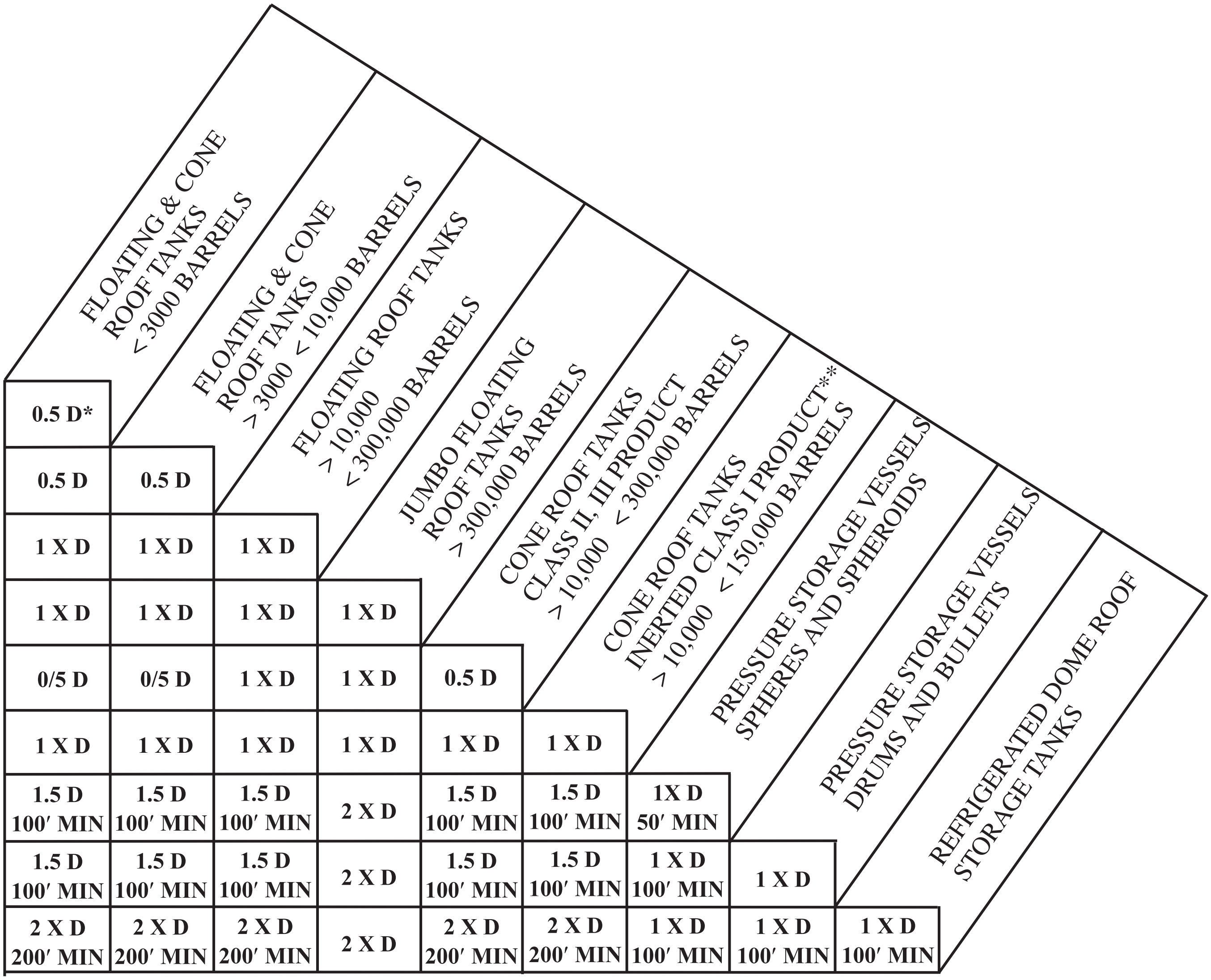

	FLOATING & CONE ROOF TANKS < 3000 BARRELS	FLOATING & CONE ROOF TANKS > 3000 < 10,000 BARRELS	FLOATING ROOF TANKS > 10,000 < 300,000 BARRELS	JUMBO FLOATING ROOF TANKS > 300,000 BARRELS	CONE ROOF TANKS CLASS II, III PRODUCT > 10,000 < 300,000 BARRELS	CONE ROOF TANKS INERTED CLASS I PRODUCT** > 10,000 < 150,000 BARRELS	PRESSURE STORAGE VESSELS SPHERES AND SPHEROIDS	PRESSURE STORAGE VESSELS DRUMS AND BULLETS	REFRIGERATED DOME ROOF STORAGE TANKS
FLOATING & CONE ROOF TANKS < 3000 BARRELS	0.5 D*								
FLOATING & CONE ROOF TANKS > 3000 < 10,000 BARRELS	0.5 D	0.5 D							
FLOATING ROOF TANKS > 10,000 < 300,000 BARRELS	1 X D	1 X D	1 X D						
JUMBO FLOATING ROOF TANKS > 300,000 BARRELS	1 X D	1 X D	1 X D	1 X D					
CONE ROOF TANKS CLASS II, III PRODUCT > 10,000 < 300,000 BARRELS	0/5 D	0/5 D	1 X D	1 X D	0.5 D				
CONE ROOF TANKS INERTED CLASS I PRODUCT** > 10,000 < 150,000 BARRELS	1 X D	1 X D	1 X D	1 X D	1 X D	1 X D			
PRESSURE STORAGE VESSELS SPHERES AND SPHEROIDS	1.5 D 100′ MIN	1.5 D 100′ MIN	1.5 D 100′ MIN	2 X D	1.5 D 100′ MIN	1.5 D 100′ MIN	1X D 50′ MIN		
PRESSURE STORAGE VESSELS DRUMS AND BULLETS	1.5 D 100′ MIN	1.5 D 100′ MIN	1.5 D 100′ MIN	2 X D	1.5 D 100′ MIN	1.5 D 100′ MIN	1 X D 100′ MIN	1 X D	
REFRIGERATED DOME ROOF STORAGE TANKS	2 X D 200′ MIN	2 X D 200′ MIN	2 X D 200′ MIN	2 X D	2 X D 200′ MIN	2 X D 200′ MIN	1 X D 100′ MIN	1 X D 100′ MIN	1 X D 100′ MIN

D = Largest Tank Diameter
1 barrel = 42 Gallons = 159 l
***C = (*F• 32) x 0.555**
1 ft = 0.305 m

*** For Class II, III products, 5 ft spacing is acceptable.**
**** Or Class II or III operating at temperatures > 200° F.**

Excerpted from GE GAP Guidelines 2.5.2.
Reprinted with permission from GE Global Asset Protection Services.
Original Copyright March 1990.

MAINTENANCE GUIDELINES

Proper maintenance is an important activity for safe, reliable and profitable operation of gas processing facilities. GPA has developed a separate publication addressing Maintenance Practices (ref 18.201). The intent of the above referenced publication is "... to provide a basic understanding of maintenance management practices and information on some of the tools available to assist in improving safety, environmental, and overall asset performance." Definitions in maintenance management are given in Fig. 18-37, Nomenclature.

Introduction

There is terminology and several concepts that are routinely used in maintenance practices. Some of these are explained below.

Overall Unit Efficiency (OEE):

A comprehensive indicator of a plant's or equipment item's condition that takes into account operating time, performance and quality.

$$\text{OEE} = \text{Absolute Availability} \times (\text{Actual Production Rate/Design Production Rate}) \times (\text{On Spec Production/Actual Production}) \times 100$$

Eq 18-5

Utilization:

Percentage of equipment operating hours (runtime) during a given calendar period. Utilization can be expressed mathematically as:

$$\text{Utilization (\%)} = \frac{\text{THIP} - (\text{SM} + \text{UM} + \text{ND})}{\text{THIP}} \times 100$$

Eq 18-6

Availability:

Availability is the probability that an equipment item will be available to produce production when it is needed. The method by which Availability is calculated varies based on what it is being used for. The following are the most common calculations for Availability:

Absolute Availability — Percentage of hours during which the equipment is available for operation during a given calendar period. Absolute Availability can be expressed mathematically as:

$$\text{Absolute Availability (\%)} = \frac{\text{THIP} - (\text{SM} + \text{UM})}{\text{THIP}} \times 100$$

Eq 18-7

Operating Availability — This definition is the same as that of Absolute Availability except that maintenance performed during no demand (ND) downtime is not included in the scheduled maintenance (SM) or unscheduled maintenance (UM) downtime charged to the equipment. Operating Availability can be expressed mathematically as:

$$\text{Operating Availability (\%)} = \frac{\text{THIP} - (\text{SM}^1 + \text{UM}^1)}{\text{THIP}} \times 100$$

Eq 18-8

Process Availability — Percentage of hours during which the equipment is available for operation when such operation is required by the process where the equipment is installed. Process Availability can be expressed mathematically as:

$$\text{Process Availability (\%)} = \frac{\text{PHIP} - (\text{SM} + \text{UM})}{\text{PHIP}} \times 100$$

Eq 18-9

FIG. 18-37

Nomenclature

— **ND** —	Hours during which equipment operation is not required due to either no demand or to other process downtime not chargeable to the equipment under analysis.
— **PHIP** —	Total hours in period under analysis during which equipment is required to operate in process service. As compared to THIP, PHIP can be defined mathematically as **THIP-ND**.
— **SM** —	Hours during which equipment is unavailable for operation due to performance of scheduled maintenance.
— **SM^1** —	Hours during which equipment is required for operation but unavailable due to performance of scheduled maintenance. As compared to **SM**, this term excludes any scheduled maintenance hours performed during no demand **(ND)** downtime.
— **THIP** —	Total calendar hours in period under analysis (e.g., 8760 hours per calendar year)
— **UM** —	Hours during which equipment is unavailable for operation due to performance of unscheduled maintenance.
— **UM^1** —	Hours during which equipment is required for operation but unavailable due to performance of unscheduled maintenance. As compared to **UM**, this term excludes any unscheduled maintenance hours performed during no demand **(ND)** downtime.
— **PM** —	Preventive Maintenance
— **PdM** —	Predictive Maintenance

To illustrate the variance in measured "availability," consider the following situation:

THIP = 8760 hours (one calendar year)
PHIP = 7000 hours (79.91% demand for equipment operation during calendar year)
SM = 50 hours
SM^1 = 10 hours
UM = 30 hours
UM^1 = 20 hours
ND = 1760 hours

Measured "availability" for this piece of equipment would be:

Absolute Availability = 99.09%

Operating Availability = 99.66%

Process Availability = 99.57%

Reliability:

The probability that equipment item will perform its intended function without failure for a specific time period. The method by which Reliability is calculated varies based on what it is being used for. The following are the most common calculations for Reliability:

Absolute Reliability — Percentage of hours during which the equipment is not down for unscheduled maintenance during a given calendar period. Absolute Reliability can be expressed mathematically as:

$$\text{Absolute Reliability (\%)} = \frac{\text{THIP} - \text{UM}}{\text{THIP}} \times 100 \qquad \textbf{Eq 18-10}$$

Operating Reliability — This definition is the same as that of Absolute Reliability except that unscheduled maintenance performed during no demand (ND) downtime is not included in the unscheduled maintenance (UM) downtime charged to the equipment. Operating Reliability can be expressed mathematically as:

$$\text{Operating Reliability (\%)} = \frac{\text{THIP} - \text{UM}^1}{\text{THIP}} \times 100 \qquad \textbf{Eq 18-11}$$

Process Reliability — Percentage of hours during which the equipment is not down for unscheduled maintenance when operation is required by the process where the equipment is installed. Process Reliability can be expressed mathematically as:

$$\text{Process Reliability (\%)} = \frac{\text{PHIP} - \text{UM}}{\text{PHIP}} \times 100 \qquad \textbf{Eq 18-12}$$

Using the same assumptions as the measured "availability" example, the measured "reliability" for this piece of equipment would be as follows:

Absolute Reliability = 99.66%

Operating Reliability = 99.77%

Process Reliability = 99.71%

Equipment Life Cycle:

The time period starting when an equipment item is put into service until it is permanently taken out of productive service. For an example the life cycle of an engine can be several decades even though it might go through several Maintenance Life Cycles during this time period.

Maintenance Life Cycle:

The time period between the highest maintenance level regimen required in the equipment's maintenance program. This may be expressed as the time between zero hour reconditioning, major overhauls, or similar terminology. At the completion of a maintenance life cycle, the maintenance program "clock" is reset to zero, and (with the possible exception of some life-limited components) the equipment's maintenance regimen can restart as if the equipment were new.

Planned Maintenance:

Maintenance, which has been scheduled, some predetermined time period prior to the maintenance work being performed. The predetermined time period is set by each facility to meet its business requirements. As a rule this time period ranges between seven and thirty-one days.

Preventive Maintenance:

Maintenance which is planned and performed on a scheduled basis. Most preventative maintenance is done strictly on a calendar basis however it can be scheduled based on meter reading such as equipment run hours.

Optimization of Preventative Maintenance requires the performance of the minimum amount of maintenance at the longest maintenance interval possible while still keeping an equipment item within required operating parameters.

Condition Based Maintenance:

Maintenance based on point-in-time measurement of key equipment operating parameters. Examples might include: (1) changing a fuel gas injection valve on an engine based on leakage detected by an engine-compressor analyzer, or (2) inspecting bearings based on a high bearing wear metal report from lubricating oil analysis.

Predictive Maintenance:

A maintenance technology predominantly based on analysis of historical equipment operation and maintenance experience with extrapolated forecasting from which future maintenance requirements can be determined. Predictive Maintenance normally incorporates both planned and condition based maintenance technologies and tools as a source of data to determine when maintenance is required. A Planned Maintenance example would be the change out of a component during a planned inspection based on the determination of the component's statistical life expectancy or mean time between failure in a Predictive Maintenance analysis.

Proactive Maintenance:

A maintenance strategy, which strives to eliminate all failures before they happen by applying the findings and recommendations of root cause failure analysis to all operating equipment and in the design and procurement of new equipment. Maintainability and life cycle costs are key decision factors the procurement of new equipment.

Zero Hour:

Restoration of equipment item to its design specifications.

CMMS:

Computerized maintenance management system.

Master Equipment List (MEL):

A comprehensive list of all equipment items in a facility. As a minimum a MEL must contain the name of the equipment item, where it is located, a unique identifier, either numeric or alpha numeric, and what type of equipment it is. A MEL can contain more information such as specific details about the equipment item, its criticality rating, whether it is spared, etc.

Key Performance Indicator (KPI):

A performance measure that is utilized to benchmark the effectiveness of various systems and functions within an organization.

Criticality:

A ranking based on an equipment item's inherent reliability, impact of its failure on the system and the consequence of its failure with respect to safety, the environment, production and repair costs.

Criticality can be determined through sophisticated modeling techniques or simple "What-If" type methodology. The level of sophistication used is generally determined by a facility's profitability and/or perceived risks to employees or the public.

Maintenance Drivers

In order to remain competitive, it is important to know where and why money is spent, particularly when it comes to maintenance and reliability. Market conditions change often requiring a shift in business strategies. The Maintenance, Operations and Engineering organizations that support an asset have to be able to change and adapt to these ever-changing business conditions. In order to understand where and how to make these changes, these organizations must first understand what is required out of the facility in terms of availability, and ultimately deliverability to meet market or contractual requirements.

"Availability is concerned with all levels of performance with respect to sustained deliverability rather than just visible uptime and downtime. It is also concerned with the design, management and support resources and work processes behind specified achievable performance." **(I)** A plant is a collection of systems that interact with each other to perform the function of producing a product. Each individual piece of equipment has its own inherent reliability and when taken in context with its maintainability, produces an availability. These systems taken as a whole will then result in an overall availability for the plant.

The Maintenance Drivers are the reasons why maintenance should be carried out. Maintenance Drivers should be documented in the following three (3) major categories (you may elect to group these differently, but it should be done for each facility).

Safety and Environmental

Maintenance carried out in support of Health, Safety and Environmental concerns with a goal of no accidents, no harm to people and no damage to the environment.

Safety — protection of your employees and the general public from any danger created from failure to maintain equipment.

Health — protection of the long-term health of your employees and the general public from any concern resulting from failure to maintain equipment.

Environmental — protection of the environment that could result from failure to maintain equipment.

Mechanical Integrity — as required by OSHA regulations, the integrity of vessels and equipment must be maintained.

Regulatory Requirements — rules and regulations like OSHA and others require certain maintenance procedures and actions to be taken. These may be the maintenance drivers at times.

Production

Maintenance which supports the achievement of the business plan production targets.

Planning/Predictability — maintenance that is done in concert with the business plan or timed to coincide with other maintenance. Many times this type of maintenance is done in conjunction with turnarounds or partial shutdown within a large facility.

Optimization of Investment — maintenance that is done to allow optimization whether for production increases, increase through puts or just being able to fully utilize a facility.

Protection of Investment/assets — maintenance that is done as part of an overall plan to protect the entire facility.

Resource Utilization planning — maintenance that ties closely to planning but is done at prescribed times to allow for ultimate utilization of your assets.

Optimized Life Cycle — maintenance done to prolong (optimize) your ability to utilize that equipment.

Achievement of long-term or short-term goals — maintenance that is done or delayed to meet either long term or short term goals such as expenses to fall within certain quarters or business cycles.

Commercial

Maintenance carried out to prevent or limit equipment failure especially where to cost of repair or replacement is high.

Cost of lost production — maintenance that is done to prevent or avert lost opportunity to make production.

Repair Costs — maintenance that is done to prevent the extremely high cost of repair or replacement.

Contractual — maintenance that is done to comply with contractual requirements especially when a downstream customer is dependent on the supply you provide.

Customer Satisfaction — maintenance that is done to provide satisfaction to a customer or in conjunction with a customer.

MAINTENANCE PROGRAM DEVELOPMENT

This is an important part of developing maintenance strategies. Figure 18-38 shows steps in developing a maintenance program. This figure shows the maintenance planning beginning during the initial facilities design and construction. The planning culminates in an on-going cycle of evaluation and continuous improvement.

FIG. 18-38

Maintenance Program Development

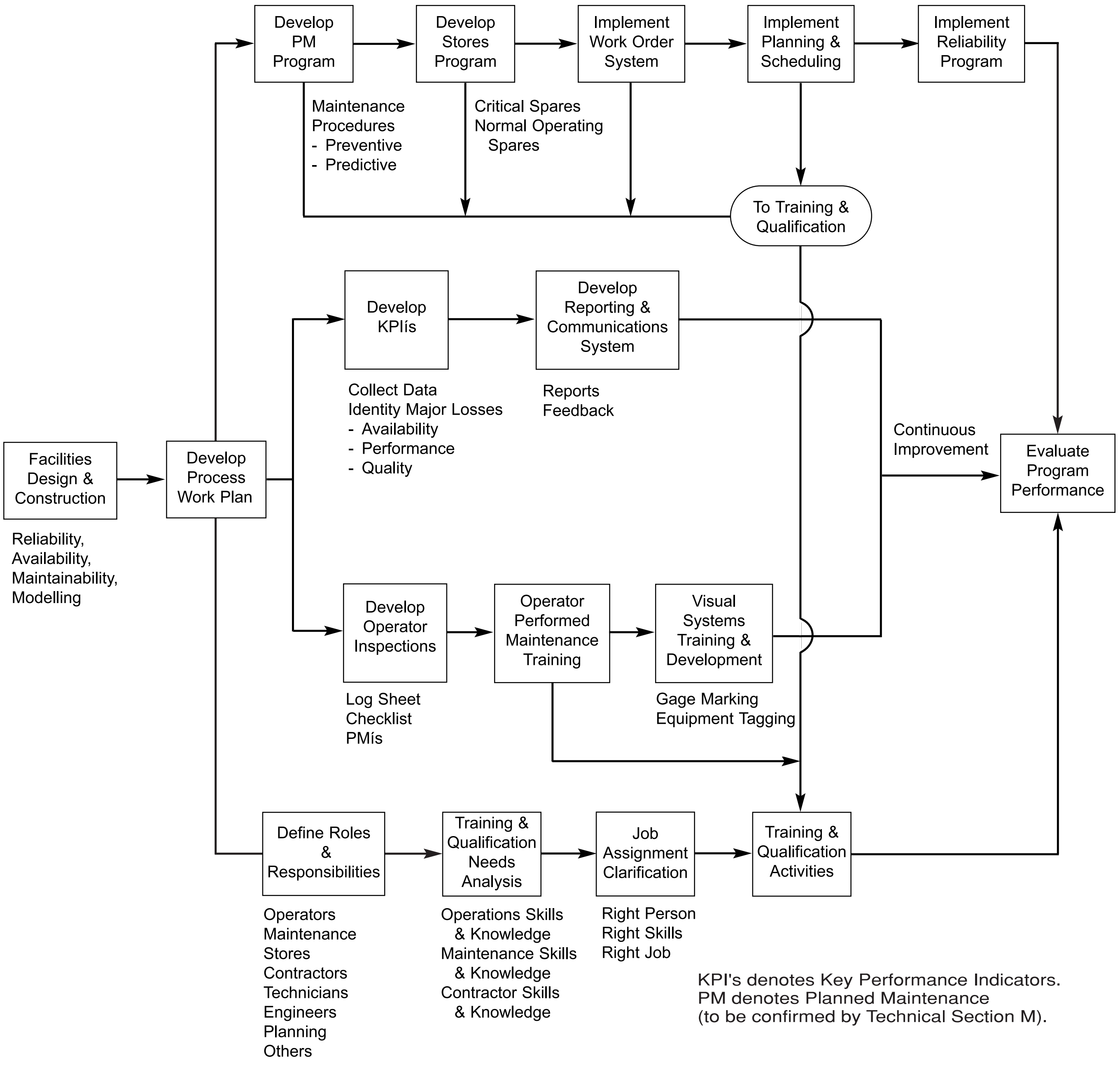

KPI's denotes Key Performance Indicators.
PM denotes Planned Maintenance
(to be confirmed by Technical Section M).

RELIABILITY, AVAILABILITY AND MAINTAINABILITY

Reliability, Availability and Maintainability (RAM) are evaluated during the design stage. The inputs for a RAM study are illustrated in Figure 18-39. One result of a RAM study in an Equipment Criticality Listing. This listing ranks equipment systems according to their impact on production losses. Criticality affects the sparing philosophy.

PLANNED MAINTENANCE VALIDATION

Figure 18-40 addresses some important maintenance management activities. This figure can be used in establishing the level of maintenance required. It can help strike a balance between insufficient maintenance (higher levels of unscheduled shutdowns and lost production) and excessive maintenance (unnecessary maintenance expense)

SUMMARY

The full GPA Maintenance Practices document contains the following sections:

Introduction

Definitions

Maintenance Drivers

Developing Maintenance

Strategies

Maintenance Tools and Applications

Selection of Computerized Maintenance Management System

Maintenance Procedure Development

Planning and Scheduling

Continuous Improvement

FIG. 18-39

Reliability, Availability and Maintainability

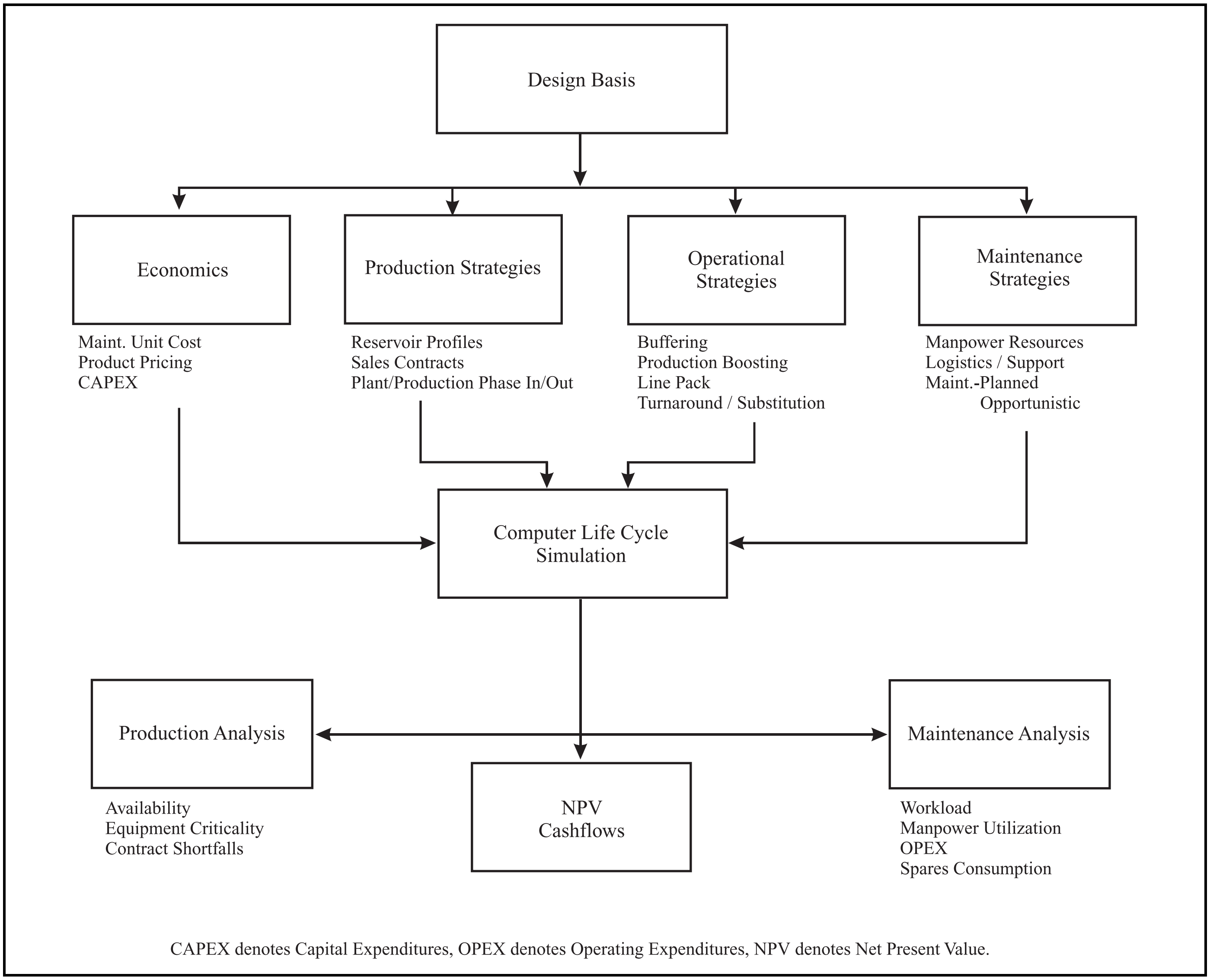

CAPEX denotes Capital Expenditures, OPEX denotes Operating Expenditures, NPV denotes Net Present Value.

FIG. 18-40

PM Validation Process

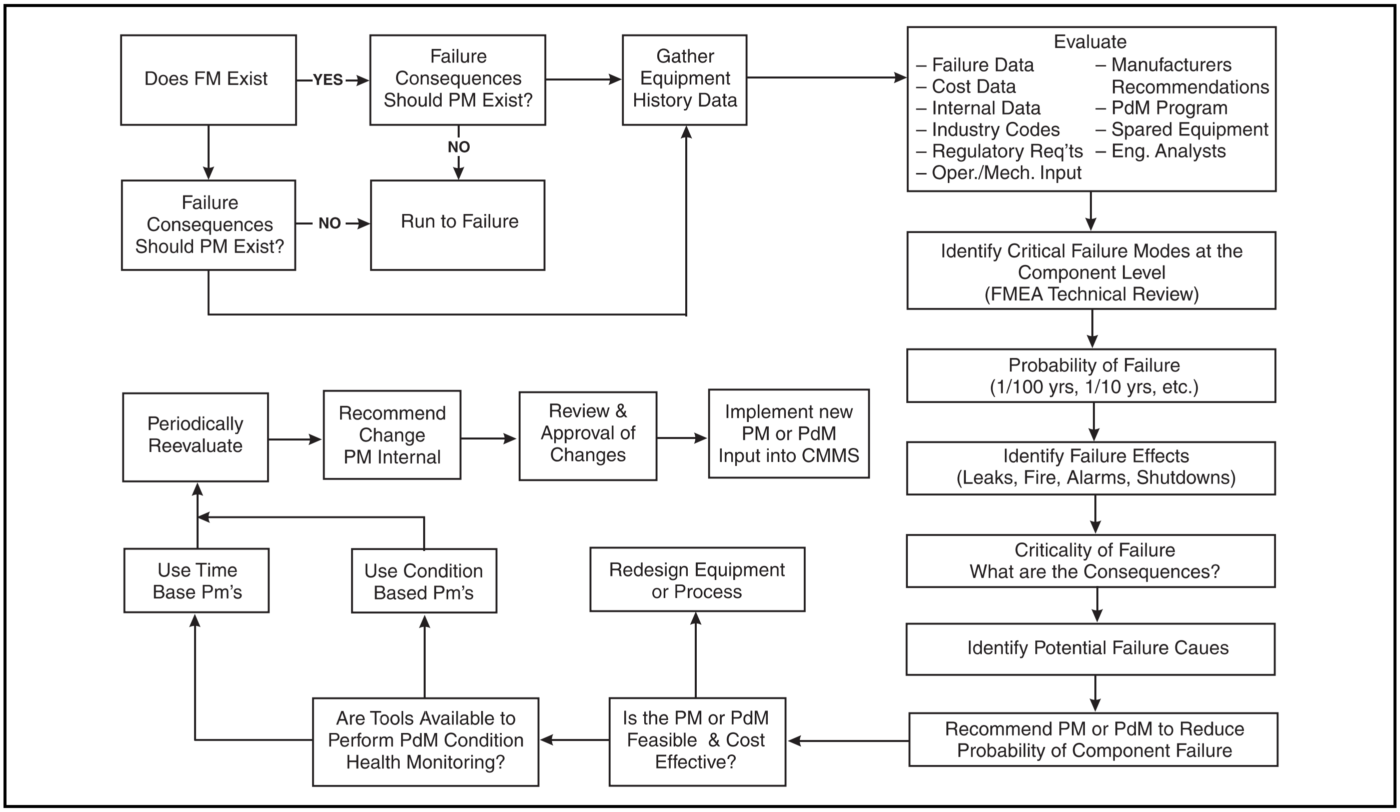

REFERENCES

1. Beychok, M. R., "State of the Art Wastewater Treatment", p 109-112, Hydrocarbon Processing, Vol. 50, No. 12 (December 1971).
2. Applegate, L. E., "Membrane Separation Processes", p 64-89, Chem. Engr. Vol. 19, No. 12 (June 11, 1984).
3. Puckorius, P., Get a Better Reading on Scaling Tendency of Cooling Water, Power, p 79-81 (September 1983).
4. Jacklin, C., Correlation of Silica Carry-over and Solubility Studies, ASME Annual Meeting (November 1952).
5. Krisher, A. S., "Raw Water Treatment in the CPI", p 79-98, Chem. Engr. (August 28, 1978).
6. ABMA (American Boiler Manufacturers Association), 950 North Glebe Street, Arlington, Virginia 22203. (703) 522-7530 voice, (703) 522-2655 FAX.
7. Caplan, F., "Is Your Water Scaling or Corrosive?" Chemical Engineering 129 (September 1, 1975).
8. ASME (American Society of Mechanical Engineers) Consensus on Operating Practices for the Control of Feed Water and Boiler Water Chemistry in Modern Industrial Boilers, 38 pp. ISBN No. 0-7918-1204-9, 1994, ASME, 345 47th Street, New York, New York 10017.
9. Laut, Philippe B. and Johnstone, David, "Use Nitrogen to Boost Plant Safety and Product Quality", Chemical Engineering, June 1994.
10. GPA Section M, "Maintenance Practices", Gas Processors Association, Tulsa, Oklahoma, December 2001.

BIBLIOGRAPHY

1. Applebaum, S. B., "Demineralization by Ion Exchange in Water Treatment and Chemical Processing of Other Liquids", Academic Press, New York and London, 1968.
2. Benefield, L. D. and C. W. Randall, "Biological Process Design for Wastewater Treatment", Prentice-Hall, Inc., Englewood Cliffs, N.J., 1980.
3. Betz Laboratories, Inc., "Betz Handbook of Industrial Water Conditioning", Betz Laboratories, Inc., Trevoise, PA, 1980.
4. Drew Chemical Corp., "Drew Principles of Industrial Water Treatment", Drew Chemical Corp., Boonton, N.J., 1977.
5. EPRI CS-2276, "Design and Operating Guidelines Manual for Cooling Water Treatment", Electric Power Research Institute, Palo Alto, California, 1982.
6. Hamer, P., J. Jackson, and E. F. Thurston, "Industrial Water Treatment Practice", Butterworth & Co. Ltd., London , 1961.
7. Nalco Chemical Co., "Nalco Water Treatment Handbook", McGraw-Hill Book Co., New York, 1979.
8. Nemerow, N. L., "Theory and Practices of Industrial Waste Treatment", Addison-Wesley Publishing Co., Inc., Reading, Massachusetts, 1963.
9. Milne, K. C., "The Treatment of Waste Waters from Sour Gas Processing Plants", Energy Processing/Canada pp. 30-33 (Jan-Feb 1975).
10. Christensen, D. R. and Conn, B. R, "Waste-Water Treating is Successful", Oil & Gas J., pp. 199-204 (September 20, 1976).

11. Beychok, M. R., “Aqueous Wastes from Petroleum and Petrochemical Plants”, John Wiley and Sons Ltd., New York and London, 1967.
12. ASME (American Society of Mechanical Engineers) “Consensus on operating practices for the control of feedwater and boiler water chemistry in modern industrial boilers,” ISBN No. 0-7918-1204-9, 1994.
13. 1984 National Electrical Code, National Fire Protection Association, Batterymarch Park, Quincy, MA 02269.
14. American Petroleum Institute, 1220 L Street, Northwest, Washington, D.C. 20005.
    Recommended Practices:
    a. API RP-500A–Recommended Practice for Classification of Locations for Electrical Installations in Petroleum Refineries.
    b. API RP-540–Recommended Practice for Electrical Installations in Petroleum Processing Plants, 1974.
    c. API RP-540, Addendum of June 1977, Table 2 revised.
15. National Electrical Manufacturers Association, NEMA Standard Publication:
    a. MG-1 1978, Motors and Generators.
    b. ICS 2-1978–Standards for Industrial Control Devices, Controllers, and Assemblies.
16. Institute of Electrical & Electronics Engineers (IEEE)
    a. IEEE No. 141-1976, "Recommended Practice for Electrical Power Distribution for Industrial Plants."
    b. ANSI CS-1977 National Electrical Safety Code.
17. Fink, Donald G., and Carroll, John M., "Standard Handbook for Electrical Engineers, Tenth Edition," McGraw-Hill, 1968, Sec. 23-119-122, pp. 23-30 & 31.
18. The National Electric Code Handbook, P. J. Schram, ed., National Fire Protection Association, Qunicy, MA, 1983.
19. Maintenance Practices — GPA Section M, revised December 2001, 82 pp. Gas Processors Association, Tulsa, Oklahoma.

SECTION 19

Fractionation and Absorption

Fractionation

Fractionation is a unit operation utilized to separate mixtures into individual products. Fractionation involves separating components by relative volatility (α). The difficulty of a separation is directly related to the relative volatility of the components and the required purity of the product streams.

FIG. 19-1

Nomenclature

a'_t = tube flow area, ft^2
a_t = total tube flow area, ft^2
A = absorption factor used in Eq 19-28
A_c = cross sectional area, ft^2
A_t = heat transfer surface, ft^2
AAM = tray active area, ft^2
ADM = tray downcomer area, ft^2
ATM = tower cross sectional area, ft^2
b = exponent in Eq 19-5 and 19-6
B = bottoms product rate, moles/unit time
C = coefficient in Eq 19-11, ft/hr
CAF = vapor capacity factor, corrected, ft/sec
CAF_o = vapor capacity factor, uncorrected, ft/sec
CFS = vapor loading, ft^3/sec
D′ = diameter, ft
D = distillate (overhead) product rate, moles/unit time
D_T = tower diameter, ft
E_a = absorption efficiency, Eq 19-30
E_s = stripping efficiency, Eq 19-32
f = friction factor (Moody friction factor/144), ft^2/in^2
F = feed rate, moles/unit time
F_p = packing factor
FF = flooding factor used in Eq 19-17
FPL = flow path length, ft
g_c = conversion factor, 32.174 $(ft \bullet lb_m)/(lb_f \bullet sec^2)$
G_t = mass velocity, $lb/(hr \bullet ft^2)$
G_p = tower vapor loading, $lb/(ft^2 \bullet sec)$
GPM = tower liquid loading, gal./min
H = enthalpy, Btu/lb
HETP = height of packing equivalent to a theoretical plate
HTU = height of a transfer unit
K = equilibrium K-value, y/x
L_o = liquid reflux rate, moles/unit time
L_p = liquid loading, $lb/(ft^2 \bullet sec)$
L = liquid rate, moles/unit time
L_t = tube length, ft
L_{m+1} = rich oil entering the stripper, moles/unit time
m = number of stripping stages
M = mass flow rate, lb/hr
n = number of absorber stages
N_m = minimum number of theoretical stages
NP = number of passes in a tray
N_t = number of tubes
ΔP = pressure drop, psi
q = moles of saturated liquid in the feed per mole of feed
Q = heat transfer duty, Btu/hr
Q_c = condenser duty, Btu/hr
R = reflux ratio, moles of reflux divided by moles of net overhead product
Re = Reynolds number, dimensionless
s = specific gravity
S = number of stages
S_T = stripping factor used in Eq 19-31
S_F = separation factor defined by Eq 19-1
TS = tray spacing, inches
U_D = overall heat transfer coefficient, $Btu/(hr \bullet ft^2 \bullet °F)$
v = specific volume, ft^3/lb
v_{max} = maximum velocity, ft/hr
v_i = specific volume of the inlet, ft^3/lb
v_o = specific volume of the outlet, ft^3/lb
V = vapor rate, moles/unit time
V_1 = vapor rate leaving top tray, moles/unit time
V_{max} = volumetric vapor flow rate, ft^3/hr
VD^*_{dsg} = downcomer velocity (uncorrected), gpm/ft^2
VD_{dsg} = downcomer velocity (corrected), gpm/ft^2
V_{load} = vapor loading defined by Eq 19-13, ft^3/sec
V_o = stripping medium rate, moles/unit time
w = weight flow, lb/hr
x = liquid mole fraction
X = liquid rate, moles/unit time
X_{m+1} = moles of a component in the rich oil entering a stripper per mole of rich oil entering the stripper
x_1 = moles of a component in the lean oil per mole of rich oil
X_o = moles of a component in the liquid in equilibrium with the stripping medium per mole of entering rich oil
y = vapor mole fraction
Y_i = moles of any component in the lean gas leaving the absorber per mole of rich gas

FIG. 19-1 (Cont'd)

Y_{n+1} = moles of any component in the entering rich gas per mole of rich gas
Y_o = moles of any component in the gas in equilibrium with the entering lean oil, per mole of rich gas
Z = static head, ft

Greek

α = relative volatility
β_{ij} = volatility factor defined in Eq 19-5
θ = correlating parameter in Eq 19-7, 19-8
σ = surface tension, dyne/cm
ρ = density, lb/ft^3
ε = efficiency
μ = viscosity, cp

Subscripts

avg = average value
B = bottoms
BP = bubble point feed stream
bottom = bottom of the column
calc = calculated value
corr = corrected value
D = distillate (overhead)
F = feed
G = gas
HK = heavy key
i = any component
L = liquid
LK = light key
m = minimum
n = tray number
top = top of the column

Virtually all gas processing plants producing natural gas liquids require at least one fractionator to produce a liquid product which will meet sales specifications. The schematic of an example fractionator in Fig. 19-2 shows the various components of the system. Heat is introduced to the reboiler to produce stripping vapors. The vapor rises through the column contacting the descending liquid. The vapor leaving the top of the column enters the condenser where heat is removed by some type of cooling medium. Liquid is returned to the column as reflux to limit the loss of heavy components overhead.

Internals such as trays or packing promote the contact between the liquid and vapor streams in the column. Intimate contact of the vapor and liquid phases is required for efficient separation. Vapor entering a separation stage will be cooled which results in some condensation of heavier components. The liquid phase will be heated which results in some vaporization of the lighter components. Thus, the heavier components are concentrated in the liquid phase and eventually become the bottom product. The vapor phase is continually enriched in the light components which will make up the overhead product.

FIG. 19-2

Fractionation Schematic Diagram

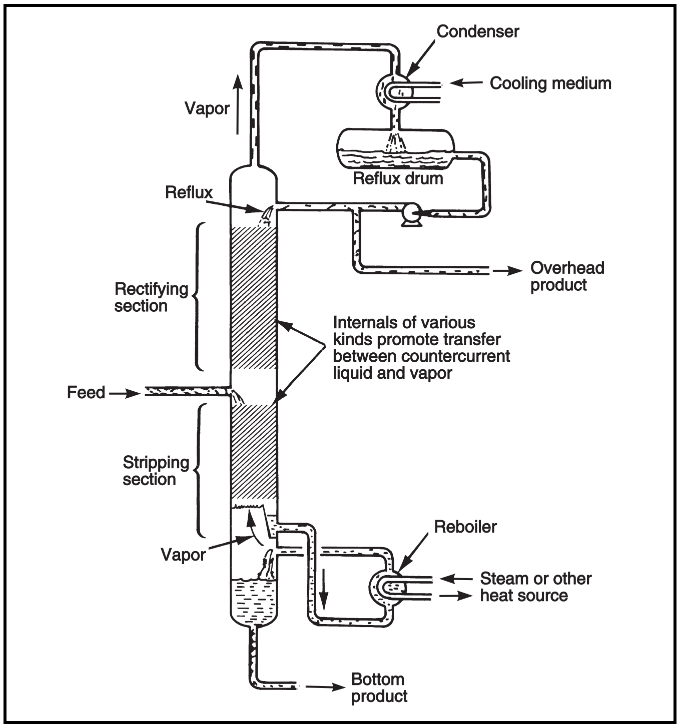

The vapor leaving the top of the column may be totally or partially condensed. In a total condenser, all vapor entering the condenser is condensed to liquid and the reflux returned to the column has the same composition as the distillate or overhead product. In a partial condenser, only a portion of the vapor entering the condenser is condensed to liquid. In most partial condensers only sufficient liquid will be condensed to serve as reflux for the tower. In some cases, however, more liquid will be condensed than is required for reflux and there will actually be two overhead products, one a liquid having the same composition as the reflux and the other a vapor product which is in equilibrium with the liquid reflux.

Equilibrium Stage Concept

All calculations are performed using theoretical (equilibrium) stages. A fractionation column may be considered as a series of equilibrium flashes with two feeds and two product streams (Fig. 19-3). The vapor enters the flash from the stage below at a higher temperature and the liquid stream enters from the stage above at a lower temperature. Heat and mass transfer occur in this stage such that the exiting streams are a bubble point liquid and dew point vapor at the same temperature and pressure. The compositions of these phases are related by the equilibrium relationship of $y_i = K_i x_i$ (See Section 25). This relationship, along with heat and material balance considerations, is the basis for all fractionator design.

Types of Fractionators

The number and type of fractionators required depend on the number of products to be made and the feed composition. Typical NGL products from a fractionation process include:

- Demethanized Product (C_2+)
- Deethanized Product (C_3+)
- Ethane/Propane mixtures (EP)
- Commercial Propane
- Propane/Butane mixture (LPG)
- Butane(s)

FIG. 19-3

Basic Fractionation Model

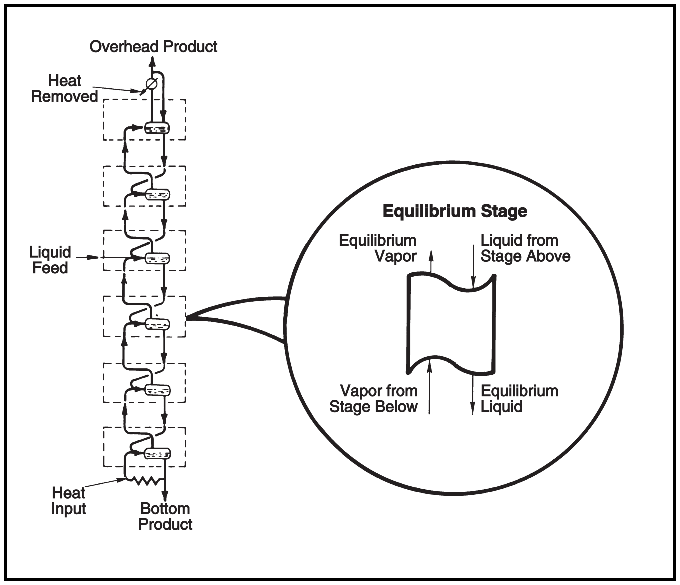

- Butane/Gasoline mixtures
- Natural Gasoline
- Mixtures with a vapor pressure specification

See Section 1 for definitions and Section 2 for product specifications.

An example fractionation train used to produce three products is illustrated in Fig. 19-4. The feed stream contains too much ethane to be included in the products; thus, the first column is a deethanizer. The overhead stream is recycled to the upstream processing plant or sent to a fuel system. The bottom product from this column could be marketed as a deethanized product. The second column, a depropanizer, produces a specification propane product overhead. The bottom product, a butane-gasoline mixture, is often sold to a pipeline without further processing. The third column, a debutanizer, separates the butane and gasoline products. This separation is controlled to limit the vapor pressure of the gasoline. The overhead butane product can be sold as a mixture or an additional column can be used to separate the iso-butane and normal-butane.

Another class of fractionators uses no external reflux condenser to produce liquid for contact with the fractionator vapor. One such tower is a demethanizer as is found in cryogenic

FIG. 19-4

Fractionation Train

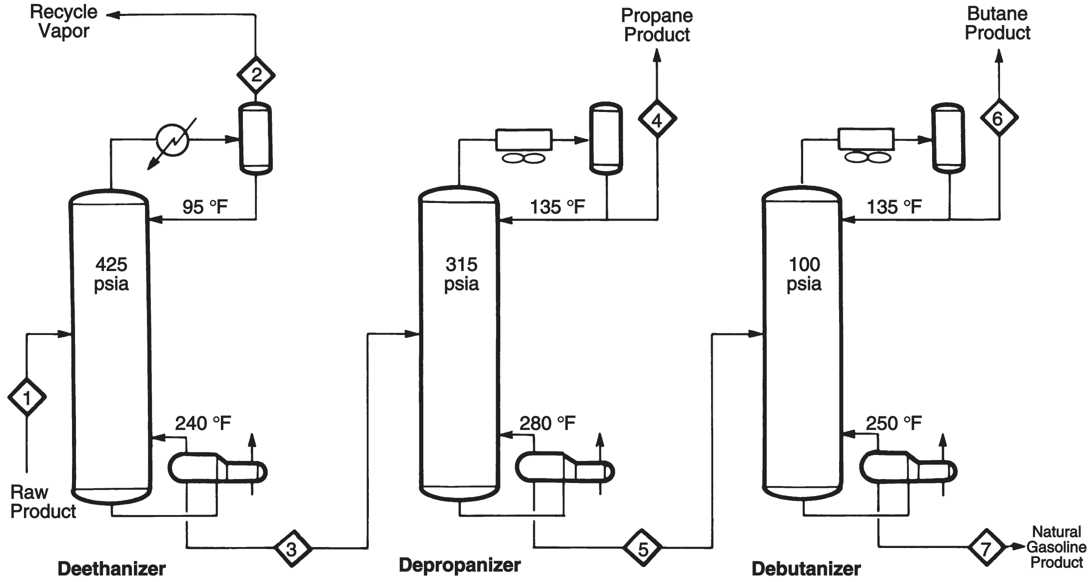

	Moles/hr						
	1	2	3	4	5	6	7
C_1	1.5	1.5					
C_2	24.6	22.2	2.4	2.4			
C_3	170.3	7.5	162.8	161.9	0.9	0.9	
iC_4	31.0		31.0	0.9	30.1	30.1	
nC_4	76.7		76.7		76.7	72.1	4.6
C_5+	76.5		76.5		76.5	0.9	75.6
Total	380.6	31.2	349.4	165.2	184.2	104.0	80.2
gal./day				41,340		31,160	29,290

plants (Fig. 19-5). The top feed being 12 mol % liquid at low temperature provides the reflux. This liquid along with the other feeds provides the liquid loading for this tower. The reboiler is the control point for the bottom product purity. The overhead composition is a function of the upstream process units.

FIG. 19-5

Demethanizer Example

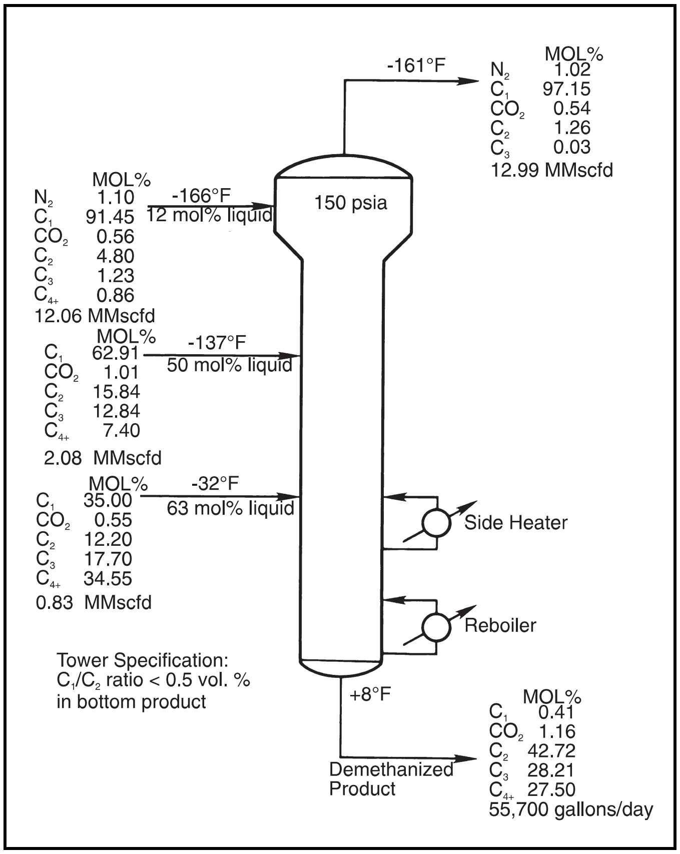

Applications also exist for a fractionator with a top liquid feed. These are commonly used for crude stabilizers or deethanizers. As with the demethanizer, this column produces a specification bottom product and an overhead stream whose composition is determined by upstream process units. This is an economical approach to producing a single product but is limited in separation efficiency. Better recovery or sharper separation can be achieved by adding a reflux condenser and rectifying section.

Product Specifications

A material balance around the column is the first step in fractionation calculations. In order to perform this balance, assumption of the product stream compositions must be made. There are three ways of specifying a desired product from a fractionator:

- A percentage recovery of a component in the overhead or bottom stream.
- A composition of one component in either product.
- A specific physical property, such as vapor pressure, for either product.

The recovery and composition specifications can be used directly in the material balance. However, property specifications are used indirectly. For instance if vapor pressure is a desired specification of a product, a material balance is performed with an assumed component split. The calculated vapor pressure of the resulting stream is then compared with the desired value and the material balance redone until reasonable agreement is reached.

In a multicomponent mixture, there are typically two components which are the "keys" to the separation. The light key component is defined as the lightest component in the bottom product in a significant amount. The heavy key component is the heaviest component in the overhead product in a significant amount. Normally, these two components are adjacent to each other in the volatility listing of the components. For hand calculations, it is normally assumed for material balance purposes that all components lighter than the light key are produced overhead and all components heavier than the heavy key are produced with the bottom product. By definition, the key components will be distributed between the product streams.

Example 19-1 — For the given feed stream, estimate the product stream compositions for 98% propane recovered in the overhead product with a maximum iso-butane content of the overhead stream of 1%.

Feed:			
	C_2	2.4	
	C_3	162.8	
	iC_4	31.0	
	nC_4	76.7	
	C_5	76.5	
		349.4	moles

Solution Steps

For Propane (light key):

Moles in overhead = (0.98) 162.8 = 159.5

Moles in bottoms = 162.8 – 159.5 = 3.3

For Ethane:

Moles in overhead = 2.4 (100% to overhead)

Since the isobutane (the heavy key) is 1% of the overhead stream, the sum of propane and ethane must be 99% (all n-C_4 and C_5+ are in the bottoms). Thus:

$$\text{Total Overhead Moles} = \frac{159.5 + 2.4}{0.99} = \frac{161.9}{0.99} = 163.5$$

$$\text{Moles of } iC_4 = 163.5 - 161.9 = 1.6$$

The overall balance is:

	Feed	Overhead		Bottoms	
Comp.	Moles	Moles	Mole %	Moles	Mole %
C_2	2.4	2.4	1.5	—	
C_3	162.8	159.5	97.5	3.3	1.8
iC_4	31.0	1.6	1.0	29.4	15.8
nC_4	76.7	—	—	76.7	41.2
C_5	76.5	—	—	76.5	41.2
Total	349.4	163.5	100.0	185.9	100.0

In actual operation, the lighter than light key components and heavier than heavy key components will not be perfectly separated. For estimation purposes and hand calculations, perfect non-key separation is a useful simplifying assumption.

Key Parameters

Two important considerations which affect the size and cost of a fractionation column are degree of separation and component volatility.

The degree of separation or product purity has a direct impact on the size of the column and the required utilities. Higher purity will require more trays, more reflux, larger diameter, and/or a reduced product quantity. One quantitative measure of the difficulty of a separation is the separation factor, S_F, defined as:

$$S_F = \left(\frac{X_D}{X_B}\right)_{LK}\left(\frac{X_B}{X_D}\right)_{HK} \qquad \textbf{Eq 19-1}$$

Note that Eq 19-1 defines the specification for the tower design.

Typically, for most fractionation problems this factor ranges from around 500 to 2000. However, for sharp separations, it can be in the 10,000 range. The number of trays will be roughly proportional to the log of the separation factor for a given system.

The volatility of the components is usually expressed as relative volatility, α. This quantity is computed as the ratio of the equilibrium K-values of two components at a given temperature and pressure. For fractionation calculations the α of the key components is important. Therefore:

$$\alpha = K_{LK}/K_{HK} \qquad \textbf{Eq 19-2}$$

This is a measure of the ease of separation. The larger α is, the easier is the separation.

DESIGN CONSIDERATIONS

Operating Pressure

Before any design calculations can be made on a fractionation problem, a tower operating pressure must be determined. One of the primary considerations for operating pressure is the cooling medium available for the reflux condenser. The overhead product will be at bubble point conditions for a liquid product or at dew point conditions for a vapor product. The bubble point (or dew point) pressure is fixed by a desired component separation and the temperature of the cooling medium.

The cooling media typically used are air, water, and refrigerant. Air cooling is normally the least expensive cooling method. Practical exchanger design limits the process to a 20°F approach to the ambient summer temperature. This translates to a process temperature of 115 to 125°F in most locations. With cooling water, process temperatures of 95 to 105°F are possible. Below about 95°F, mechanical refrigeration must be used to achieve the desired condensing temperature. This is the most expensive cooling method from both a capital and operating cost standpoint. Generally, it is desirable to operate at as low a pressure as possible to maximize the relative volatility between the key components of the separation. However, if reducing the pressure requires a change to a more expensive cooling method, this is usually not a desirable choice.

In some cases, the overhead from the column must be compressed to sales or another process unit. In this case a higher operating pressure may be desired to reduce compression horsepower.

Other items must be considered which will limit pressure selection. If an operating pressure is too high, the critical temperature of the bottom product may be exceeded and the desired separation cannot be achieved. Additionally, the pressure cannot exceed the critical pressure of the desired overhead product.

The selection of a partial or total condenser is fixed by the disposition of the overhead product. A total condenser is used for a liquid product and a partial condenser for a vapor product. However, a liquid product can be produced as a vapor and subsequently cooled and/or compressed to produce a liquid product. There may be cases where this downstream liquefaction is economically attractive. In most cases, the fractionation system for a partial condenser will be cheaper and will have to be balanced against the cost of additional downstream equipment. Before a reliable economic comparison can be made, the column design must be made for each type condenser for a number of reflux ratios and operating pressures.

Reflux Ratio and Number of Stages

The design of a fractionation column is a capital cost versus energy cost trade-off problem. The primary parameters are the number of stages and the reflux ratio. Reflux ratio may be defined in several ways. For most calculations, reflux ratio is defined as the ratio of the molar rate of reflux liquid divided by the molar rate of net overhead product. The reboiler duty is a direct function of the reflux ratio as the fractionating column must maintain an overall heat and material balance for a given separation.

A fractionation column can only produce a desired separation between the limits of minimum reflux and minimum stages. Fig. 19-6 illustrates the relationship between reflux ratio and number of stages for a given separation. At minimum reflux an infinite number of stages is required. At total reflux a minimum number of stages is required. Neither of these situations represents actual operation but are the extreme limits

FIG. 19-6

Relationship Between Reflux Ratio and Number of Stages

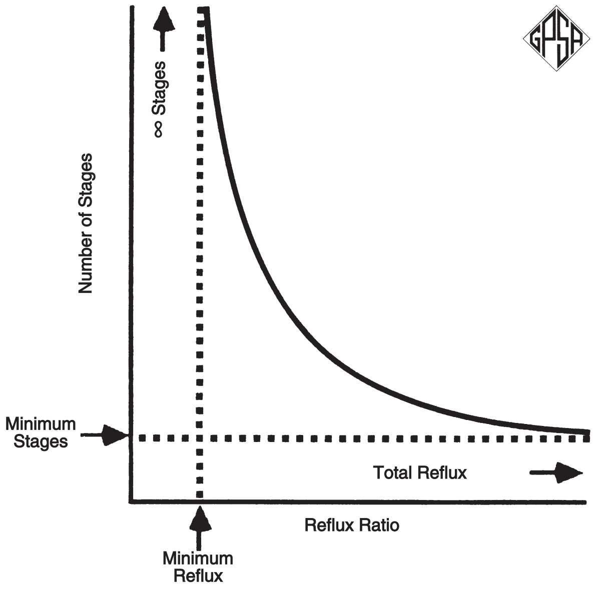

of possible design configurations. Methods have been developed to calculate both these cases in a rigorous manner.[1, 2] However, these methods require a computer solution of tray-by-tray calculations. In order to begin a detailed design, estimates of minimum reflux ratio and minimum trays should be generated from simple methods using a binary key component analysis.

Minimum Stages

The minimum stages can be calculated for most multicomponent systems by the Fenske equation.[3]

$$S_m = \frac{\log S_F}{\log (\alpha_{avg})} \qquad \textbf{Eq 19-3}$$

S_m in this equation includes a partial reboiler and a partial condenser if these items are used.

The α_{avg} is the column average relative volatility of the key components in the separation. Various averaging techniques have been proposed such as square root averaging of the α at the top and bottom of the column. The most common approach is to use an arithmetic average:

$$\alpha_{avg} = \frac{\alpha_{top} + \alpha_{bottom}}{2} \qquad \textbf{Eq 19-4}$$

If volatility varies widely, the approach of Winn[4] is suggested, in which a modified volatility is used:

$$\beta_{ij} = K_{LK} / K_{HK}^{b} \qquad \textbf{Eq 19-5}$$

where the exponent b is obtained from K-value plots over the range of interest.

The minimum stage calculation is:

$$S_m = \frac{\log \left[\left(\frac{X_D}{X_B} \right)_{LK} \left(\frac{X_B}{X_D} \right)_{HK}^{b} \left(\frac{B}{D} \right)^{1-b} \right]}{\log \beta_{ij}} \qquad \textbf{Eq 19-6}$$

Note that S_m includes the partial condenser and partial reboiler if they exist.

Minimum Reflux Ratio

The Underwood method[5] is the most widely used of the methods for calculating minimum reflux ratio. Underwood assumed constant relative volatility and constant molal overflow in the development of this method. The first step is to evaluate θ by trial and error:

$$1 - q = \sum_{i=1}^{n} \frac{X_{Fi}}{(\alpha_i - \theta)/\alpha_i} \qquad \textbf{Eq 19-7}$$

Once θ is determined, the minimum reflux ratio is:

$$(L_o/D)_m + 1 = R_m + 1 = \sum_{i=1}^{n} \frac{X_{Di}}{(\alpha_i - \theta)/\alpha_i} \qquad \textbf{Eq 19-8}$$

Number of Stages

The number of theoretical stages required for a given separation at a reflux ratio between minimum and total reflux can be determined from empirical relationships. Erbar and Maddox[6] made an extensive investigation of tray-by-tray fractionator calculations and developed the correlation in Fig. 19-7. This correlation relates the ratio of minimum stages to theoretical stages to the minimum reflux ratio, R_m, and the operating reflux ratio, R (where $R = L_o/D$).

Fig. 19-7 can be used to determine an operating reflux for a given number of stages by entering the figure at the value of S_m/S, moving up to the line representing the value of $R_m/(R_m + 1)$ and reading a value of $R/(R + 1)$. The optimum operating reflux ratio has been found to be near the minimum reflux ratio. Values of 1.2 to 1.3 times the minimum are common.[7] Thus for a given R, a value of S can be determined from Fig. 19-7.

This correlation is generated on the basis of bubble point feed. If the feed is between the bubble point and dew point then the operating reflux should be corrected. Erbar and Maddox[6] proposed the following relationship to adjust the vapor rate from the top tray for non-bubble point feed:

$$V_{corr} = V_{calc} + \frac{\left(1 - \frac{D}{F}\right)[F(H_{VF} - H_{BP})]}{\left(\frac{Q_C}{L_o}\right)_{calc}} \qquad \textbf{Eq 19-9}$$

The reflux rate can then be adjusted by material balance since:

$$L_o = V_1 - D \qquad \textbf{Eq 19-10}$$

Computation Method

In order to determine the design parameters for a fractionation problem, the following method is recommended:

1. Establish feed composition, flow rate, temperature, and pressure.
2. Make product splits for the column and establish condenser temperature and column pressure. From column pressure, calculate the reboiler temperature.
3. Calculate minimum number of theoretical stages from the Fenske equation (Eq 19-3).
4. Calculate minimum reflux rate from the Underwood equations (Eq 19-7 and 19-8).
5. Obtain theoretical stages/operating reflux relation from Fig. 19-7.
6. Adjust actual reflux for feed vaporization if necessary (Eq 19-9, 19-10).

Example 19-2 — For the given feed stream, 291,000 gal./day (bubble point feed).

Desire: 98% C_3 in the overhead (relative to the feed)
1% iC_4 in the overhead

Air cooling (120°F Condensing Temperature)

Feed Composition	Mol %	Moles/hr
C_2	2.07	21.5
C_3	48.67	505.6
iC_4	10.11	105.0
nC_4	24.08	250.1
iC_5	5.41	56.2
nC_5	4.81	50.0
C_6	4.85	50.4
	100.00	1038.8

Find the:

- Minimum trays required
- Minimum reflux ratio

FIG. 19-7

Erbar-Maddox Correlation of Stages vs Reflux[6]

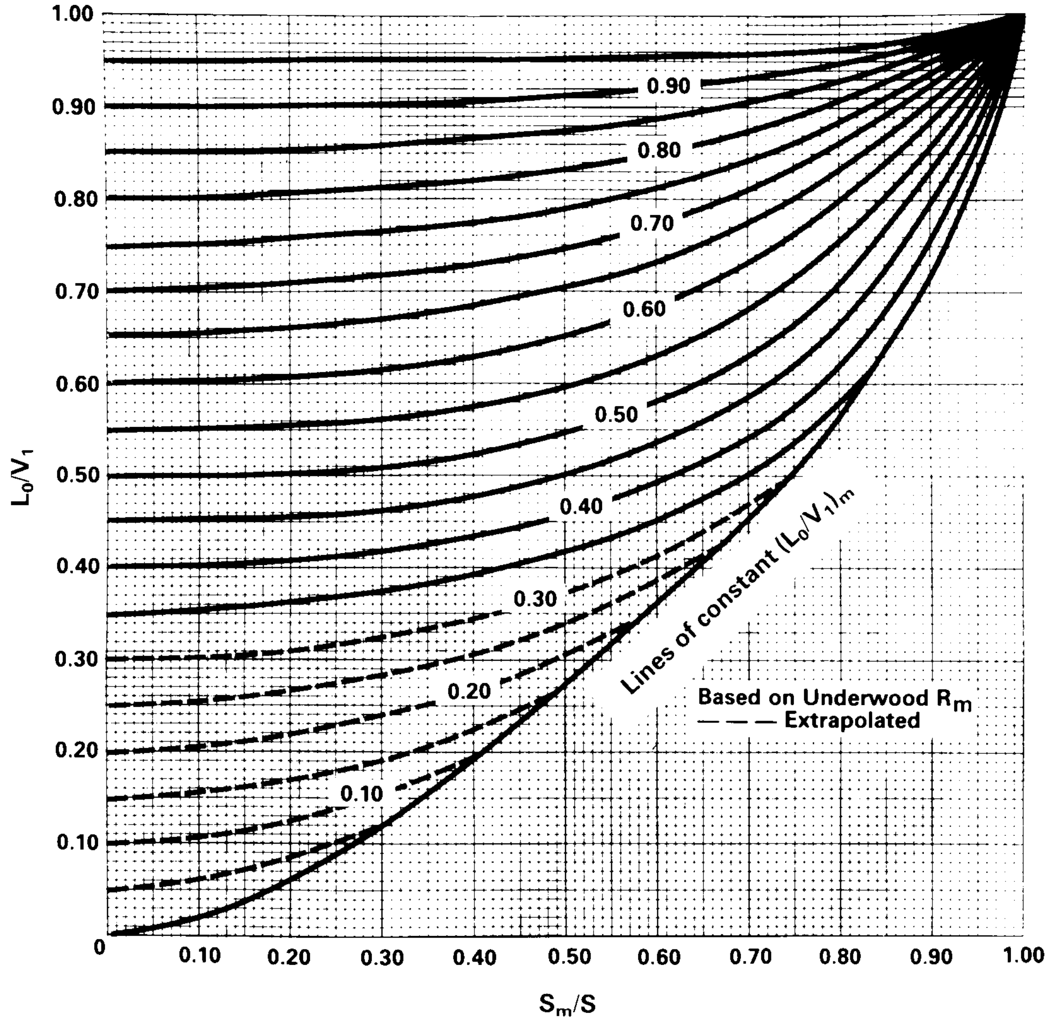

- Actual trays at 1.3 times the minimum reflux ratio

Solution Steps

Estimate Product Splits from Material Balance:

	Overhead		Bottoms	
	Moles	Mol %	Moles	Mol %
C_2	21.5	4.1	—	—
C_3	495.4	94.9	10.2	2.0
iC_4	5.2	1.0	99.8	19.3
nC_4	—	—	250.1	48.4
iC_5	—	—	56.2	10.9
nC_5	—	—	50.0	9.7
C_6	—	—	50.4	9.7
Totals	522.1	100	516.7	100

Get tower pressure at 120°F (bubble point calculation). Using K-values from Section 25:

	K	α
C_2	2.80	
C_3	0.93	2.067
iC_4	0.45	

bubble point pressure = 280 psia

Estimate the bottom temperature using K-values at 280 psia (bubble point calculation) assuming negligible pressure drop:

	K	α
C_3	2.30	1.643
iC_4	1.40	
nC_4	1.15	
iC_5	0.68	
nC_5	0.62	
C_6	0.15	

bubble point temperature = 250°F

$\alpha_{avg} = 1.855$

Determine the minimum number of trays (Eq 19-3):

$$S_F = \left(\frac{94.9}{2.0}\right)\left(\frac{19.3}{1.0}\right) = 915.8$$

$$S_m = \frac{\log(915.8)}{\log(1.855)} = 11 \text{ trays}$$

Correct for change in relative volatility by using Eq 19-6:

$$K_{LK} = 0.93 = \beta_{ij}(0.45)^b \text{ (condenser)}$$

$$K_{LK} = 2.30 = \beta_{ij}(1.4)^b \text{ (reboiler)}$$

dividing gives $2.473 = (3.111)^b$

$$b = 0.798; \beta_{ij} = 1.759$$

$$S_m = \frac{\log\left[\left(\frac{495.4}{10.2}\right)\left(\frac{99.8}{5.2}\right)^{0.798}\left(\frac{516.7}{522.1}\right)^{1-0.798}\right]}{\log(1.759)}$$

$$S_m = \frac{\log(512.1)}{\log(1.759)} = 11.05$$

Thus correcting for changing α did not affect the minimum tray calculation in this example.

Find the minimum reflux, R_m (Eq 19-7, 8):

	x_F	α_{avg} relative to C_6+	$\alpha x_F/(a-\theta)$		
			$\theta = 16$	$\theta = 15$	$\theta = 15.8$
C_2	0.0207	68.33	0.0270	0.0265	0.0269
C_3	0.4867	26.67	1.2165	1.1123	1.1941
iC_4	0.1011	13.83	-0.6443	-1.1951	-0.7098
nC_4	0.2408	11.00	-0.4506	-0.6622	-0.5518
iC_5	0.0541	5.83	-0.0310	-0.0344	-0.0316
nC_5	0.0481	5.00	-0.0219	-0.0241	-0.0223
C_6	0.0485	1.00	-0.0032	-0.0035	-0.0033
Total			0.0925	-0.7805	-0.0978

$$\theta = 15.9$$

$$R_m + 1 = \frac{68.33\,(0.041)}{68.33 - 15.9} + \frac{26.67\,(0.949)}{26.67 - 15.9} + \frac{13.83\,(0.01)}{13.83 - 15.9}$$

$$R_m + 1 = 2.336$$

$$R_m = 1.336$$

Theoretical trays at $R = (1.3)\,R_m = 1.737$

$$L_o/V_1 = \frac{R}{R+1} = \frac{1.737}{(1.737 + 1.0)} = 0.635$$

$$(L_o/V_1)_m = \frac{R_m}{R_m + 1} = \frac{1.336}{(1.336 + 1.0)} = 0.572$$

$S_m/S = 0.54$ (Fig. 19-7)

$S = 20.46$ trays (use 21 trays)

TRAYED COLUMNS

Internals

Various types of trays are used in fractionation columns. Fig. 19-8 presents an isometric sketch of the top two trays in a fractionation column with bubble caps. The bubble caps, along with the weirs and downcomers, maintain a liquid level on the trays. The liquid flows across the tray, into the downcomer, and across the next tray in the opposite direction. The vapor flows up through the caps and through the slots mixing with the liquid.

Fig. 19-9 shows the vapor flow through bubble cap trays, sieve trays, and valve trays. Due to the riser in the bubble cap, it is the only tray which can be designed to prevent liquid from "weeping" through the vapor passage. Sieve or valve trays control weeping by vapor velocity. The bubble cap tray has the highest turndown ratio, with designs of 8:1 to 10:1 ratio being common. Bubble cap trays are almost always used in glycol dehydration columns.

Valve and sieve trays are popular due to the lower cost and increased capacity over bubble cap trays for a given tower diameter. Fig. 19-10 shows two valve designs. The upper drawing shows a floating valve free to open and close with varying vapor flow rates. The lower drawing shows a "caged" valve which prevents valve loss due to erosion of the tray. Various other designs are common such as using multiple disks and rectangular valves. Valves of assorted weights have also been used to increase flexibility.

The sieve or perforated tray is the simplest construction of the three general types and thus is the least expensive option. The sieve tray is simply a plate with holes for vapor passage. Although the sieve tray generally has higher capacity, its main disadvantage is that sieve trays will be susceptible to "weep-

FIG. 19-8

Top Two Trays of a Bubble-cap Column[28]

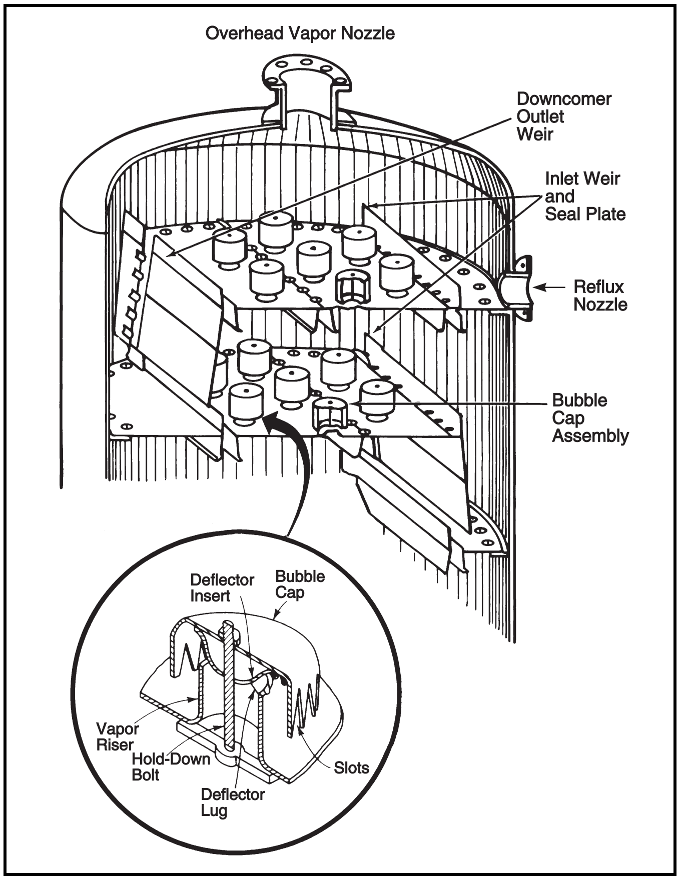

FIG. 19-9

Flow Through Vapor Passages[28]

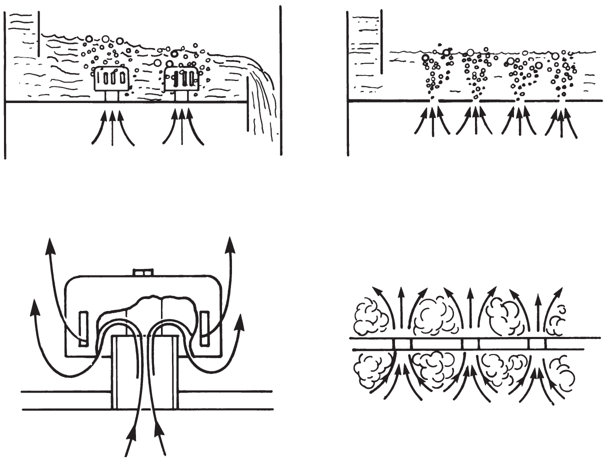

(a) Vapor flow through bubble cap

(b) Vapor flow through perforations

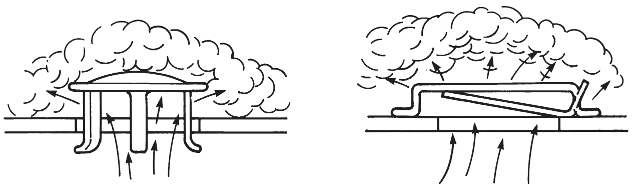

(c) Vapor flow through valves

FIG. 19-10

Valve Types[28]

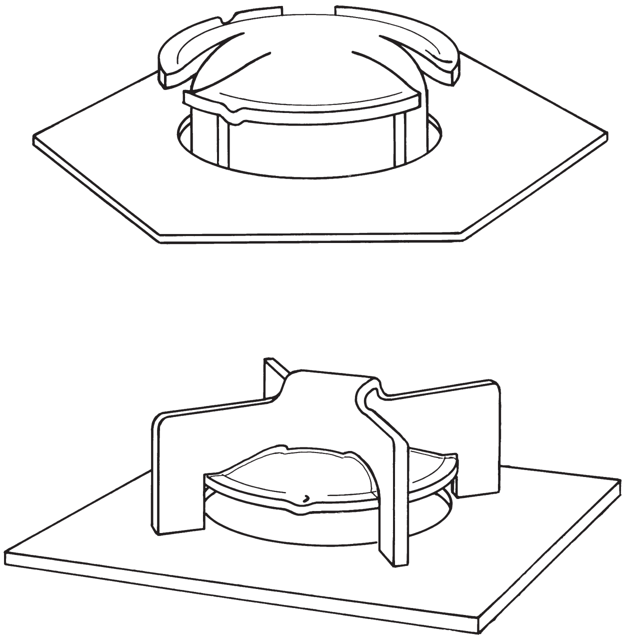

ing" or "dumping" of the liquid through the holes at low vapor rates and its turndown capacity is limited.

Trayed columns generally provide satisfactory operation over a wide range of vapor and liquid loadings. Fig. 19-11 shows operating characteristics for a representative system. The vapor and liquid rates can vary independently over a broad range and the column will operate satisfactorily. At low vapor rates unsatisfactory tray dynamics may be characterized by vapor pulsation, dumping of liquid, or uneven distribution. At high vapor rates, the tower will eventually flood as liquid is backed-up in the downcomers. At low liquid rates, poor vapor-liquid contact can result. High liquid rates can cause flooding and dumping as the liquid capacity of the downcomers is exceeded.

In order to handle higher liquid rates, more downcomer area is required. This is often achieved by using multiple pass trays. Multipass trays increase liquid handling capacity for a given diameter due to reductions in the flow path length and weir crest. Fig. 19-12 shows various configurations beyond a one pass tray where the liquid phase is split into two to four flow paths to increase liquid handling capacity.

Sizing

"C" Factor Method — Many design methods for sizing trayed fractionators have been used. Generally these methods are oriented toward liquid entrainment limitations or correlations for flooding limits. A simple method called the Souders and Brown equation[8] involves using a Stokes' Law type formula:

$$v_{max} = C\sqrt{\frac{\rho_L - \rho_v}{\rho_v}} \qquad \textbf{Eq 19-11}$$

Note that ρ_L and ρ_v are at flowing temperature and pressure.

The value of C can be found from Fig. 19-13 based on tray spacing and liquid surface tension. The column diameter is:

FIG. 19-11

Limits of Satisfactory Tray Operation for a Specific Set of Tray Fluid Properties[8]

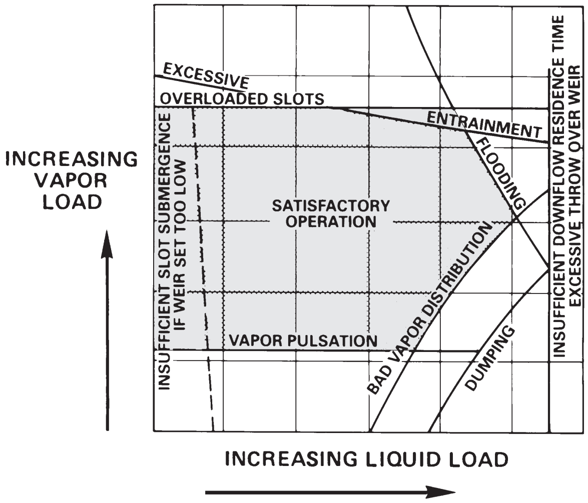

FIG. 19-12

Alternative Liquid Flow Paths

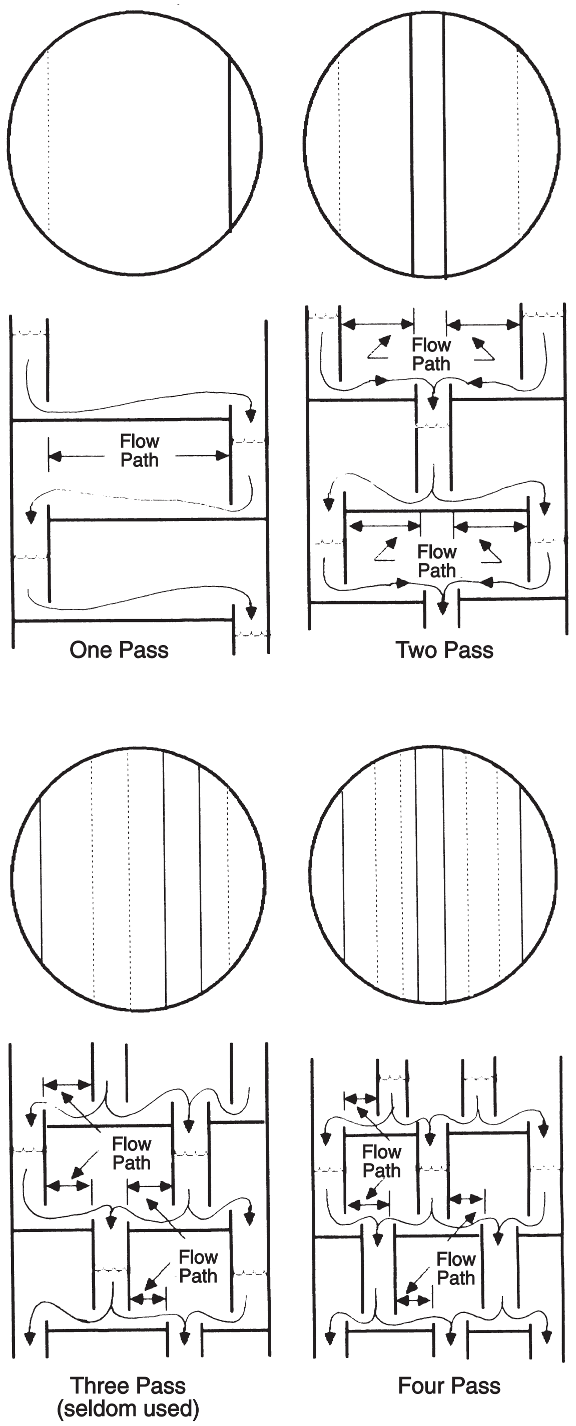

$$D_T = \sqrt{\frac{V_{max}}{v_{max}\,(0.7854)}} \qquad \textbf{Eq 19-12}$$

This method was originally developed for bubble cap trays and gives a conservative diameter, especially for other types of trays.

Nomograph Method — Manufacturers of valve trays have developed design methods for their trays. Design procedures are made available[9, 10, 11] for preliminary studies. One such procedure starts with the nomograph in Fig. 19-14.[10] This is a simple relationship of liquid rate (GPM) and a quantity V_{load} defined as:

$$V_{load} = CFS \sqrt{\frac{\rho_v}{(\rho_L - \rho_v)}} \qquad \textbf{Eq 19-13}$$

Detailed Method — Fig. 19-14 is an approximation only and does not take into account foaming which is a major consideration in many systems. In order to compensate for foaming, a System Factor is used to adjust the vapor and liquid capacities (Fig. 19-15).

The downcomer velocity VD^*_{dsg} is found from Fig. 19-16. VD^*_{dsg} is corrected by the System Factor:

FIG. 19-13

Souders-Brown Correlation for Approximate Tower Sizing[8]

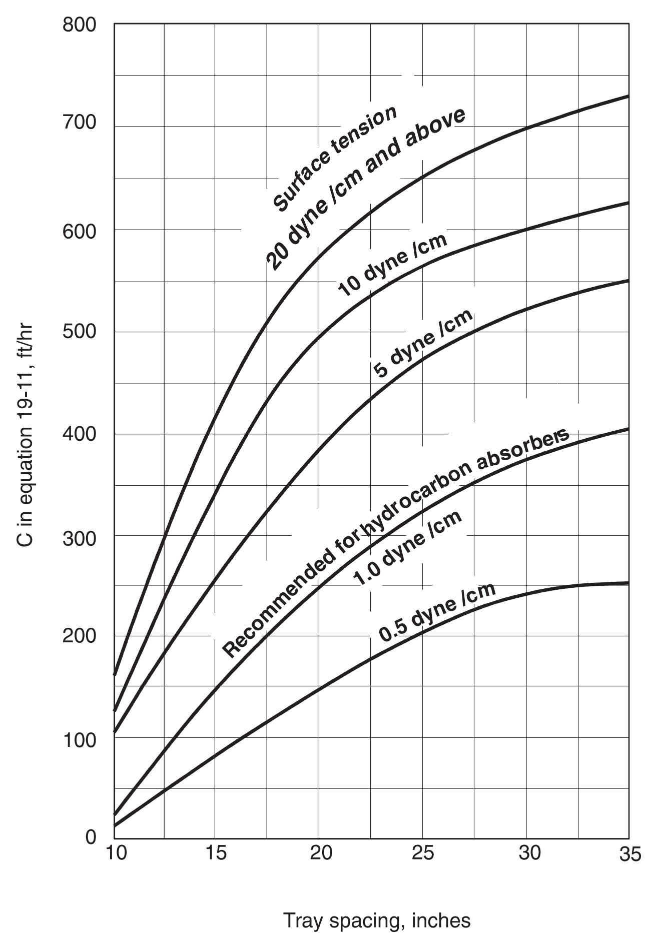

FIG. 19-14

Valve Tray Diameter[10]

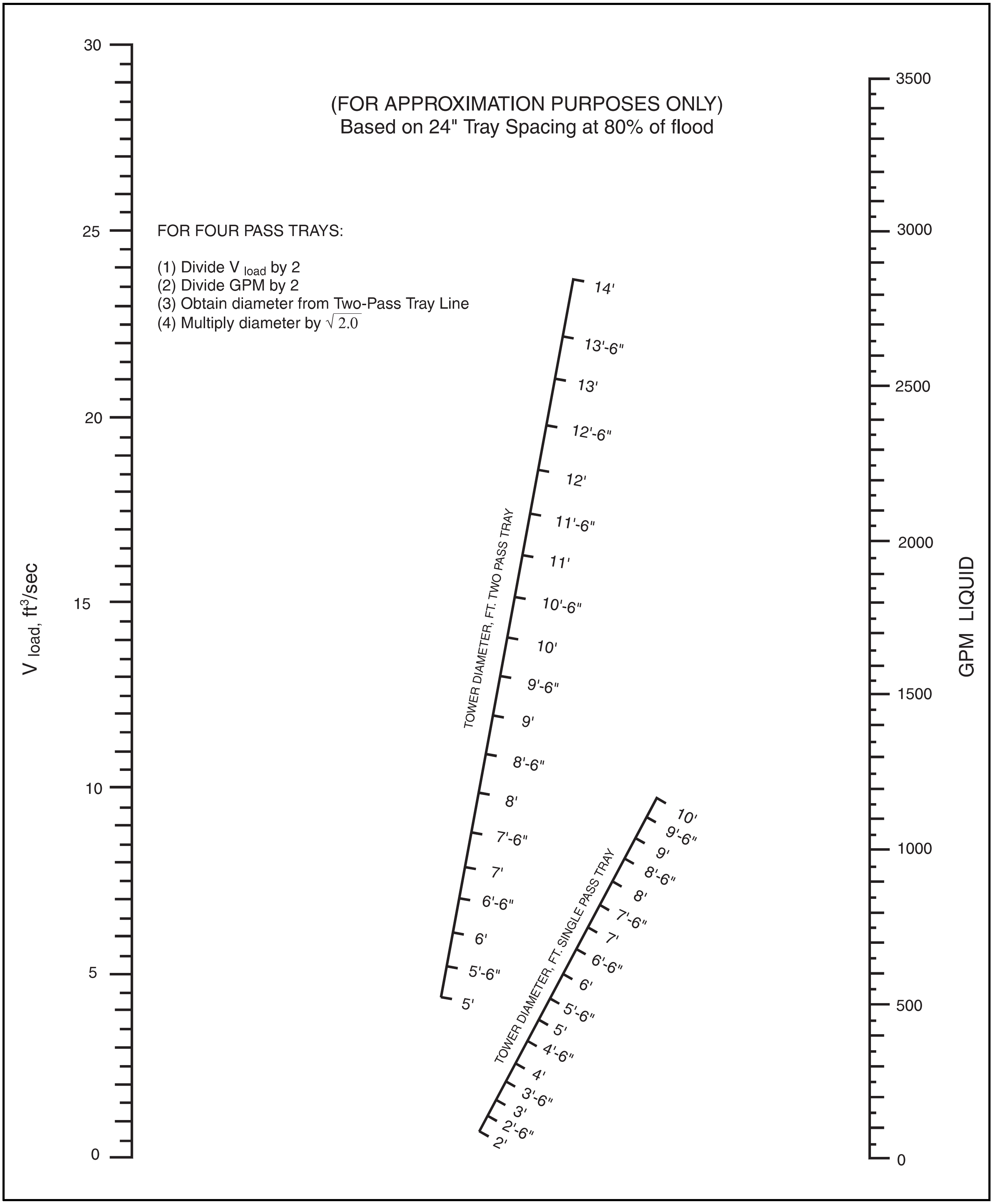

(FOR APPROXIMATION PURPOSES ONLY)
Based on 24" Tray Spacing at 80% of flood

FOR FOUR PASS TRAYS:

(1) Divide V_{load} by 2
(2) Divide GPM by 2
(3) Obtain diameter from Two-Pass Tray Line
(4) Multiply diameter by $\sqrt{2.0}$

FIG. 19-15
System Factors[9]

Systems with foaming tendencies are taken into account by using a factor to derate the capacity of a given tray design. A list of the more common foaming systems and their recommended factor is below.

System	Factor
Absorbers (over 0°F)	0.85
Absorbers (below 0°F)	0.80
Amine Contactor	0.80
Vacuum Towers	0.85
Amine Stills (Amine Regenerator)	0.85
H_2S Stripper	0.85
Furfural Fractionator	0.85
Top Section of Absorbing Type Demethanizer/ Deethanizer	0.85
Glycol Contactors	0.50
Glycol Stills	0.65
CO_2 Absorber	0.80
CO_2 Regenerator	0.85
Caustic Wash	0.65
Caustic Regenerator, Foul Water, Sour Water Stripper	0.60
Alcohol Synthesis Absorber	0.35
Hot Carbonate Contactor	0.85
Hot Carbonate Regenerator	0.90
Oil Reclaimer	0.70

The capacity of a given tray design used in *high pressure fractionation service* with a vapor density of 1.8 lb per cu ft and higher should be derated by a system factor calculated by the following formula:

$$\text{System factor} = \frac{1.21}{(\rho_V)^{0.32}}$$

$$VD_{dsg} = VD^*_{dsg} \text{ (System Factor)} \qquad \textbf{Eq 19-14}$$

The other factor required for this design method is the vapor capacity factor CAF.

$$CAF = CAF_o \text{ (System Factor)} \qquad \textbf{Eq 19-15}$$

CAF_o is read from Fig. 19-17. In order to compute the column cross sectional area, three quantities are needed.

The flow path length, FPL:

$$FPL = 9\ D_T/NP \qquad \textbf{Eq 19-16}$$

D_T and NP are found from Fig. 19-14.

The active area, AAM:

$$AAM = \frac{V_{load} + [(GPM(FPL/13000)]}{CAF \bullet FF} \qquad \textbf{Eq 19-17}$$

FF, the flooding factor commonly used is 0.82 for most systems.

The downcomer area, ADM:

$$ADM = GPM/(VD_{dsg} \bullet FF) \qquad \textbf{Eq 19-18}$$

If ADM is less than 11% of AAM, use 11% of AAM or double ADM, whichever is smaller.

The tower cross sectional area is then:

$$ATM = AAM + 2\ (ADM) \qquad \textbf{Eq 19-19}$$

or

$$ATM = \frac{V_{load}}{0.78 \bullet CAF \bullet FF} \qquad \textbf{Eq 19-20}$$

The larger of these two values is used. Then:

$$D_T = \sqrt{ATM / 0.7854} \qquad \textbf{Eq 19-21}$$

Example 19-3 — Determine the diameter of a depropanizer with the following data:

vapor rate: 70418 ft^3/hr

FIG. 19-16
Downcomer Design Velocity[10]

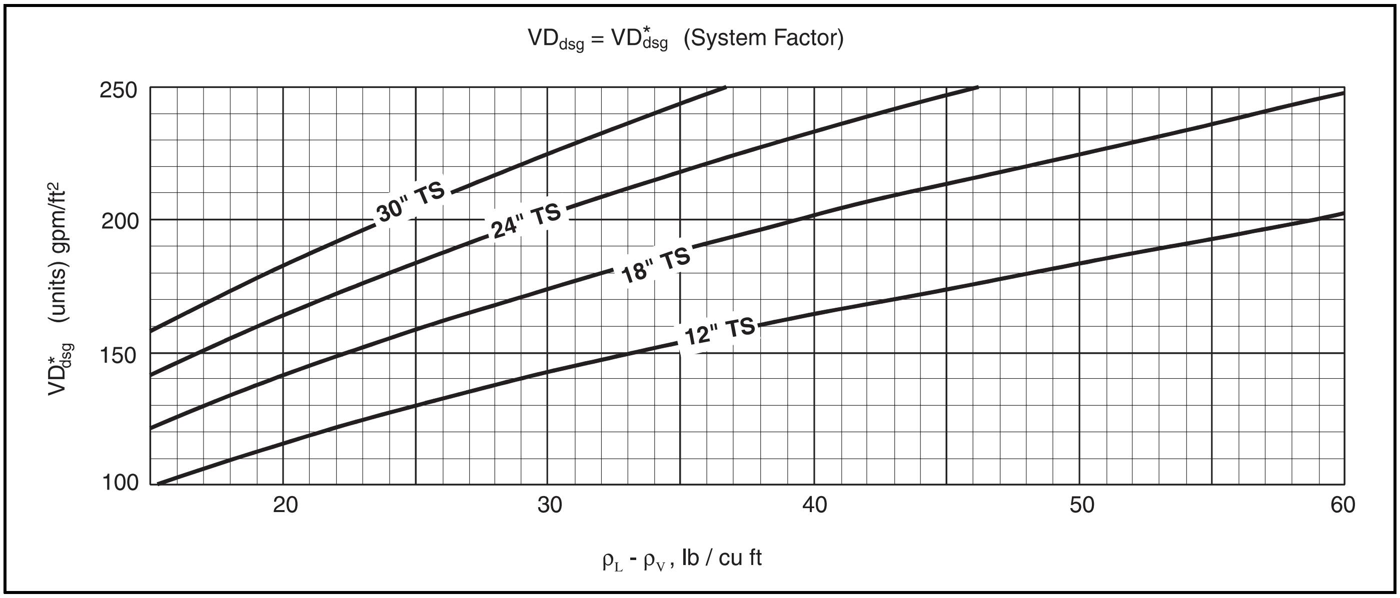

FIG. 19-17

Approximate Flood Capacity of Valve Trays[10]

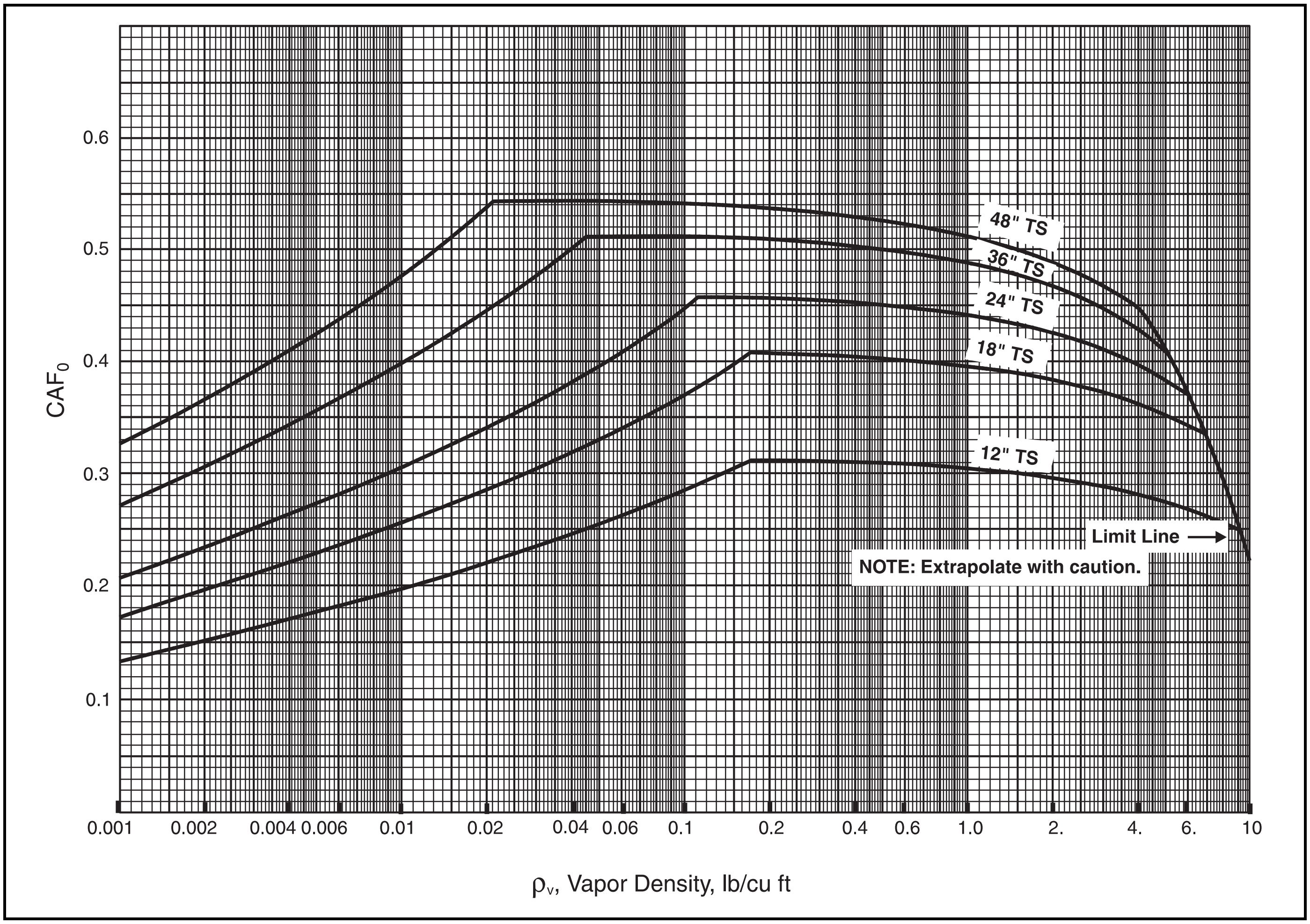

vapor density: 3.0 lb/ft^3
liquid rate: 1190 gpm
liquid density: 28.8 lb/ft^3
liquid surface tension: 3.3 dyne/cm
tray spacing: 24"

"C" Factor Method

From Fig. 19-13: C ≅ 430

$$v_{max} = 430\sqrt{\frac{28.8 - 3.0}{3.0}} = 1261 \text{ ft/hr}$$ from Eq 19-11

$$D_T = \sqrt{\frac{70418}{1261\ (0.7854)}} = 8.4 \text{ ft}$$ from Eq 19-12

Nomograph (Fig. 19-14)

$$V_{load} = \frac{70418}{3600}\sqrt{\frac{3}{28.8 - 3}} = 6.67 \text{ ft}^3\text{/sec}$$ from Eq 19-13

then from Fig. 19-14 @ GPM = 1190

D_T ≅ 9′6″ for a 1 pass tray
7′6″ for a 2 pass tray

Detailed Method

$$VD^*_{dsg} = 186 \text{ gpm/ft}^2 \text{ at } \rho_L - \rho_v = 25.8$$

$$\text{System Factor} = \frac{1.21}{(3)^{0.32}} = 0.85 \text{ (Fig. 19-15)}$$

$$VD_{dsg} = 186\ (0.85)$$

$$= 158.1 \text{ gpm/ft}^2$$

From Fig. 19-17:

$$CAF_o = 0.412 \text{ ft/sec}$$

$$CAF = (0.412)\ (0.85) = 0.350 \text{ ft/sec}$$

$$FPL = \frac{9(7.5)}{2} = 33.75 \text{ ft}$$ from Eq 19-16

$$AAM = \frac{6.67 + [1190\ (33.75/13000)]}{(0.350)\ (0.82)}$$

$$= 34.00 \text{ ft}^2$$ from Eq 19-17

$$\text{ADM} = \frac{1190}{(158.1)\,(0.82)} = 9.18\ \text{ft}^2 \qquad \text{from Eq 19-18}$$

$$\text{ATM} = 34.00 + 2(9.18) = 52.36\ \text{ft}^2 \qquad \text{from Eq 19-19}$$

$$\text{ATM} = \frac{6.67}{(0.78)\,(0.350)\,(0.82)} = 29.8\ \text{ft}^2 \qquad \text{from Eq 19-20}$$

$$D_T = \sqrt{\frac{52.36}{0.7854}} = 8.16\ \text{ft} \qquad \text{from Eq 19-21}$$

A comparison of the methods (rounded to the nearest 6")

C Factor	102"
Nomograph	90" (114" for single pass)
Detailed Method*	96"

*At at tray spacing different than 24" or for a different flooding factor, the diameter could change considerably.

Tray Efficiency

All column design work is performed using theoretical trays. An actual tray will not achieve equilibrium due to limitations of vapor-liquid contact time. In an actual column, more trays are required to obtain the desired separation. This determination is usually accomplished by the use of an overall tray efficiency defined as:

$$\varepsilon = \frac{\text{theoretical trays}}{\text{actual trays}} \qquad \textbf{Eq 19-22}$$

The determination of tray efficiencies from theoretical parameters is the topic of numerous technical articles.[12, 13, 14] A detailed discussion of this subject is beyond the scope of this book.

O'Connell[15] correlated the tray efficiencies of fractionators and absorbers. For fractionators, this correlation considered thirty-eight systems of which 27 are hydrocarbon fractionators. The correlation, shown in Fig. 19-18, relates overall tray efficiency to relative volatility computed at average column conditions and the feed viscosity at average column conditions.

Example 19-4 — Evaluate the tray efficiency for the system in Example 19-2.

Average column temperature = 185°F

Feed viscosity @ 185°F = 0.076 cp

Average α = 1.854

Solution Steps

$(\alpha)(\mu) = 0.141$

From Fig. 19-18, $\varepsilon \cong 80\%$

The system in Example 19-2 required 21 theoretical stages including the reboiler. The total actual trays is:

$$\frac{21 - 1}{0.80} \cong 25\ \text{trays}$$

FIG. 19-18

Effect of Relative Volatility and Viscosity on Plate Efficiency of Fractionating Columns

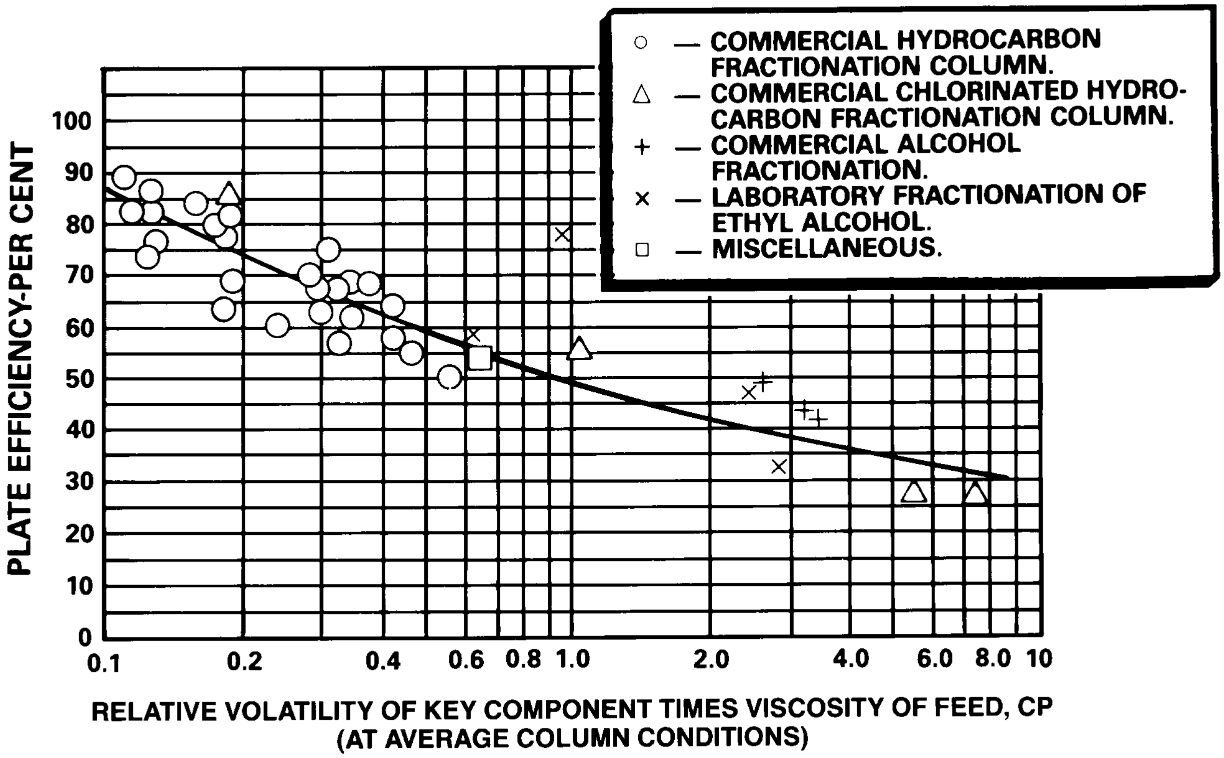

FIG. 19-19

Typical Fractionator Parameters

	Operating Pressure, psig	Number of Actual Trays	Reflux[1] Ratio	Reflux[2] Ratio	Tray Efficiency, %
Demethanizer	200 - 400	18-26	Top Feed	Top Feed	45 - 60
Deethanizer	375 - 450	25-35	0.9 - 2.0	0.6 - 1.0	60 - 75
Depropanizer	240 - 270	30-40	1.8 - 3.5	0.9 - 1.1	80 - 90
Debutanizer	70 - 90	25-35	1.2 - 1.5	0.8 - 0.9	85 - 95
Butane Splitter	80 - 100	60-80	6.0 -14.0	3.0 - 3.5	90 - 100
Rich Oil Fractionator (Still)	130 - 160	20-30	1.75 - 2.0	0.35 - 0.40	Top 67 Bottom 50
Rich Oil Deethanizer	200 - 250	40	–	–	Top 25-40 Bottom 40-60
Condensate Stabilizer	100 - 400	16-24	Top Feed	Top Feed	50-75

[1] Reflux ratio relative to overhead product, mol/mol

[2] Reflux ratio relative to feed, gal./gal.

Typically an extra tray is added to the tray count for each feed tray and each side exchanger. Using this criteria, this column should have 26 trays.

Typical operating pressures, tray counts, reflux ratio, and tray efficiencies for various gas processing systems are shown in Fig. 19-19. These are *not* design values; rather guidelines for typical values in previous applications. The actual selection depends on many factors such as feed composition, energy cost, and capital cost.

HIGH CAPACITY TRAYS

The 90s saw the proliferation of High Capacity Trays by distillation equipment vendors and users. These trays employ unconventional downcomer and deck configurations to effect vapor and/or liquid handling capability increases, when used to revamp distillation columns. High Capacity Trays have been particularly effective in demethanizers, deethanizers, depropanizers and butane columns.

One such High Capacity Tray, the NYE TRAY®, is shown in Fig. 19-20. This tray increases vapor capacity by raising the receiving pan and increasing the area available for vapor flow. This, and similar trays, employ a crossflow arrangement with liquid traveling horizontally across the decks and vapor bubbling up through the liquid, creating a froth where the mass transfer occurs. Examples of other High Capacity crossflow trays include the following:

MAC-FRAC®	(Koch-Glitsch)
Bi-FRAC™	(Koch-Glitsch)
SUPERFRAC®	(Koch-Glitsch)
Pro-Value	(St. Gobain)
Triton	(St. Gobain)
MVG	(Sulzer ChemTech)

Another style of High Capacity Trays employs a configuration sometimes called "counterflow," where the liquid spends only a short time on the tray decks and where the predominant liquid direction is vertical (downward) rather than horizontal. Examples of counterflow trays include the following:

MD™	(UOP)
ECMD™	(UOP)
VGMD™	(UOP and Sulzer ChemTech)
Hi-Fi	(Shell Global Solutions)
Vortex Downcomer	(Sulzer ChemTech)

FIG. 19-20

NYE TRAY Schematic

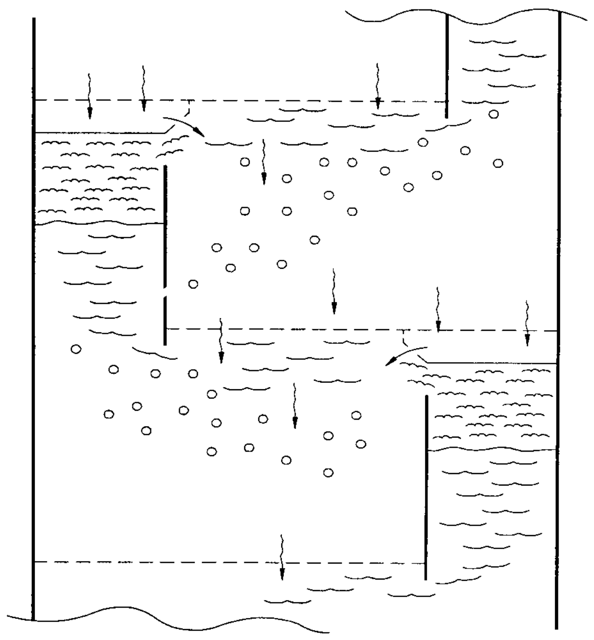

Efficiencies of these counterflow trays are often lower than those of crossflow trays due to the reduced contact time between the phases. Capacities can be quite high, and tray spacings quite small, due to the very long outlet weir that these trays are capable of providing.

Still another tray configuration, called "cocurrent flow," is expected to gain greater acceptance in the future. With cocurrent flow, the vapor and liquid phases are allowed to flow together, unidirectionally, for awhile inside contacting elements. Examples of such trays are ULTRA-FRAC® (Koch-Glitsch) and ConSep (Shell Global Solutions). Some such trays are only capable of functioning at low liquid rates such as those that are encountered in glycol dehydration columns. Little information is publicly available regarding the efficiency of cocurrent flow trays. Sizing for these, and in fact most High Capacity Trays, is regarded as proprietary by their vendors.

PACKED COLUMNS

Traditionally the majority of fractionation columns in gas processing plants were equipped with trays. However, an option to trayed columns is to use packing. With packed columns, contact between the vapor and liquid phases is achieved throughout the column rather than at specific levels.

There are generally three types of packed columns:

- Random packing wherein discrete pieces of packing are dumped in a random manner into a column shell. These packings are of a variety of designs. Each design has particular surface area, pressure drop and efficiency characteristics. Examples of various packing types are shown in Fig. 19-21. Random packing have gone through various development phases from the first generation packings which were two basic shapes, the Rashig Ring and the Berl Saddle. Second generation packings include the Pall Ring and the Inatalox Saddle which are still used extensively today. Third generation packings come in a multitude of geometries most of which evolved from the Pall Ring and The Intalox Saddle. (Fig. 19-22 and 19-23).

FIG. 19-21

Various Types of Packing[28]

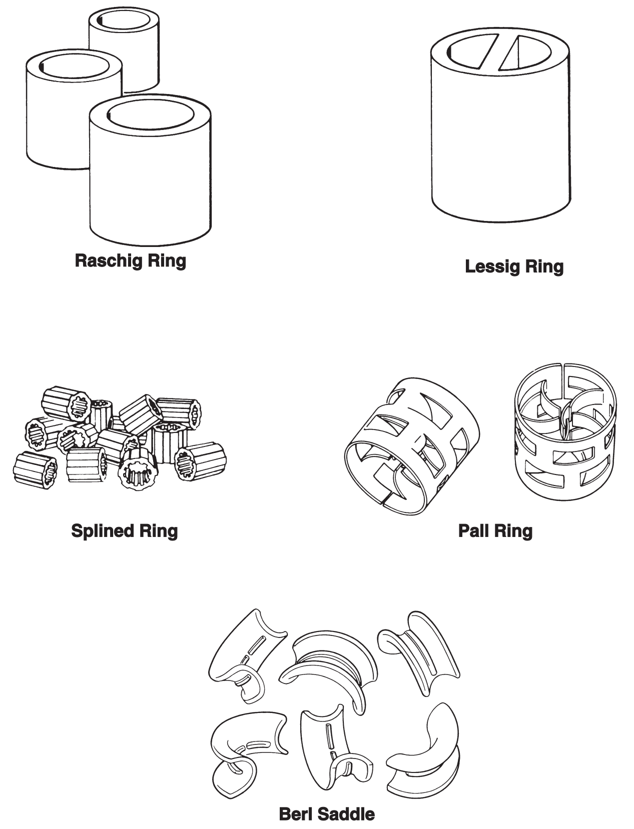

- Structured packing where a specific geometric configuration is achieved. These types of packing can either be the knitted-type mesh packing or sectionalized beds made of corrugated sheets (Fig. 19-24). There are a number of commercially available packings which differ in the angle of the crimps, the surface grooves and the use of perforations.
- Grids which are systematically arranged packing which use an open lattice structure. These types of packings have found application in vacuum operation and low pressure drop applications. Little use of these types of packings are seen in high pressure services.

Structured packing have found application in low liquid loading applications which are below 20 gpm/ft^2. Structured

FIG. 19-22

Flexipak®, Cascade Mini Rings® and Fleximax® packings

FIG. 19-23

Nutter Ring™ Metal Packings

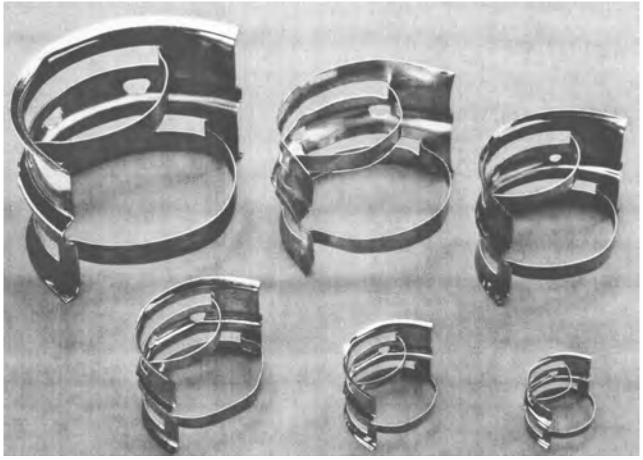

packing has performed very well in extremely low liquid loading applications such as glycol dehydration (See Section 20). The high surface tension in glycol dehydrators also helps the structured packing to perform well. Above 20 gpm/ft^2, random packings are more advantageous. Structured packings have been tried in fractionators with little success. Numerous case of structured packing failures have been experienced in high pressure and/or high-liquid rate services. Structured packings generally have lower pressure drop per theoretical stage then random packings. This can be important in low pressure applications but not for high pressure NGL fractionators.

Column Sizing

The Eckert generalized pressure drop correlation (GPDC)[16] is often used for sizing randomly packed columns. The chart in Fig. 19-26, which is a modified correlation, can be used to predict pressure drop for a given loading and column diameter. Alternatively, for a given pressure drop the diameter can be determined.

Most packed columns are designed for pressure drop of between 0.20 and 0.60 inches of water per foot of packed depth with 1.0 inches of water being the maximum.

The packing factors for various packings are shown in Fig. 19-25. Broadly speaking, packings smaller than 1 inch size are intended for towers one foot or smaller in diameter, packings 1 inch or 1½ inch in size for towers over one foot to three feet in diameters, and 2 or 3 inch packings are used for towers three or more feet in diameter. This results from tradeoffs of capacity and efficiency. The designer should select the proper size of packing, and therefore the proper packing factor for calculations.

The packing factors in Fig. 19-25 are average values which are sufficient for preliminary sizing but specific packing vendors should be contacted for design applications.

The GPDC has limitations in describing the performance of packings. Efforts to improve the correlation for specific packing geometries have led to the development and publication of charts for each packing which strive to correlate packing performance information with the same abscissa and ordinate as the GPDC chart. Kister[31] published a series of 96 charts for a wide variety of packings.

Example 19-5 — Determine the packed column diameter for example 19-3 using 2" plastic Pall rings.

Given:

$\mu = 0.076$ cp

$\Delta P = 0.5$ in. water/ft of packing

Solution Steps

$$M_L = \frac{(1190)\,(60)\,(28.8)}{(7.48)} = 274{,}909 \text{ lb/hr}$$

$$M_G = (70418)\,(3) = 211{,}254 \text{ lb/hr}$$

$$\frac{L_p}{G_p}\sqrt{\frac{\rho_v}{\rho_L}} = \frac{M_L}{M_G}\sqrt{\frac{\rho_v}{\rho_L}} = \frac{274{,}909}{211{,}254}\sqrt{\frac{3}{28.8}} = 0.42$$

From Fig. 19-26 at $\Delta P = 0.5$ in. water/ft of packing:

$$\frac{G_p^2\,\mu_L^{0.1}\,F_p\,(\rho_w/\rho_L)^{0.1}}{32.17\rho_v\,(\rho_L-\rho_v)} = 0.024$$

From Fig. 19-25 $F_p = 26$, then:

$$G_p^2 = \frac{(0.024)\,(32.17)\,(28.8-3.0)\,(3.0)}{(0.076)^{0.1}\,(26)\,(62.4/28.8)^{0.1}} = 2.753$$

$$G_p = 1.659 \text{ lb/(ft}^2 \bullet \text{sec)}$$

$$A_c = \frac{211254}{(1.659)\,(3600)} = 35.37 \text{ ft}^2$$

$D_T = 6.71$ ft (use a 7 ft column)

Packing Height

In order to determine the height of a packed column bed, the height of a theoretical plate, HETP, is required. HETP times the number of theoretical stages gives the height of the packing. Generally HETPs range from 12 to 36 in. but can be as high as 60 in. Packed columns have found wide usage in cryogenic plant demethanizers. Typical HETP's for demethanizers are 36 inches for the upper section and 30 inches for the lower section.

FIG. 19-24

Structured Packing

Courtesy of Koch-Glitsch Inc.

The prediction of the HETP from theory or empirical relations is a complex subject.[17] Recent research by Fractionation Research Inc. has underscored the sensitivity of HETP with a number of variables. HETP is a function of flow rates and properties of the system as well as the specific geometric and mechanical factors. In order to determine packing requirements, a packing manufacturer should be consulted.

Fig. 19-27 provides some example HETPs for hydrocarbon systems in the gas processing industry.[18]

HETP's are also a function of the packing size. In general, the smaller packings have lower HETP values. Fig. 19-28 shows an example trend of packing HETP's for one type of packing.

Packed Column Internals

A critical consideration in packed columns is the control of the vapor and liquid phases. Fig. 19-29 shows a cross section of a packed tower with various internals. Each section of packing is supported by a support plate or grid whose function is to carry the weight of the bed with minimum pressure drop. Hold-down grids are used at the top to prevent lifting of the bed by the vapor phase.

Liquid distribution is a critical consideration in packed columns. Poor liquid distribution causes dramatic loss of efficiency. Various designs have been used to distribute liquid feeds and to collect and redistribute the liquid at various points in the tower. Generally the liquid should be redistributed every 20 ft of packing height or every 10 column diameters, whichever is smaller.

Dumped Packing Versus Trays

Packed columns have been used extensively in the chemical industry for many years. Packings are selected instead of trays for several reasons:

- Pressure drop—Packed towers usually yield a lower pressure drop per theoretical stage. This can be important for low pressure operations. At the elevated pressures encountered in natural gas processing, column pressure drop is usually not a major issue.
- High liquid loading—for high liquid-to-vapor ratio systems, a packed column will have more capacity for a given diameter. Some fractionation applications are characterized by low liquid/vapor ratios and packing has less of an advantage for these designs.
- Corrosion—for corrosive systems, packing can be fabricated from ceramics or plastics. Trays may have to be fabricated from expensive alloy materials.

Packed columns also have several disadvantages which must be taken into account in a fractionation design:

- Turndown—Packed columns usually have limited turndown capabilities. Whereas trays can be operated as low as 10-15% of full load, packings are limited to about a 50% turndown. This can be important in situations where gas production is phased in and throughput rates build up over time.
- Liquid distribution—In trayed columns, the liquid phase is forced to flow across a tray surface. With gas bubbling through the liquid, contact is assured. In packed towers, the liquid and vapor are free to seek their own flow paths, and channeling can occur. It is critical that the liquid phase be properly distributed at the top of the column

FIG. 19-25

Packing factors (F_p) (Dumped Packing)

Packing Type	Material	Nominal Packing Size (Inches)										
		1/4	3/8	1/2	5/8	3/4	1	1.25	1.50	2	3	3.5
IMTP®	Metal				51		40		24	18	12	
Hy-Pak™	Metal						45		29	26		16
Super Intalox Saddles®	Ceramic						60			30		
Super Intalox Saddles®	Plastic						40			28		18
Pall Rings	Plastic				75		55		40	26		17
Pall rings	Metal				70		56		40	27		18
Intalox Saddles®	Ceramic	725	330	200		145	92		52	40	22	
Raschig Rings	Ceramic	1600	1000	580	380	255	155	125	95	65	37	
Raschig Rings	1/32" Metal	700	390	300	170	155	115					
Raschig Rings	1/16" Metal			410	300	220	144	110	93	62	32	
Berl Saddles	Ceramic	900		240		170	110		65	45		
Flexiring	Metal						49			23		16
Fleximax	Metal						35		26	17	11	
Cascade Mini Rings	Metal						39	36	33	26	18	
Cascade Mini Rings	Plastic						44		33	20	17	

NOTE: Values in this table are average values for the packing factor (F_p). F_p is actually a function of loading. Specific correlations for each packing from the vendors should be used for design purposes.

FIG. 19-26

Packed Column Pressure Drop Correlation

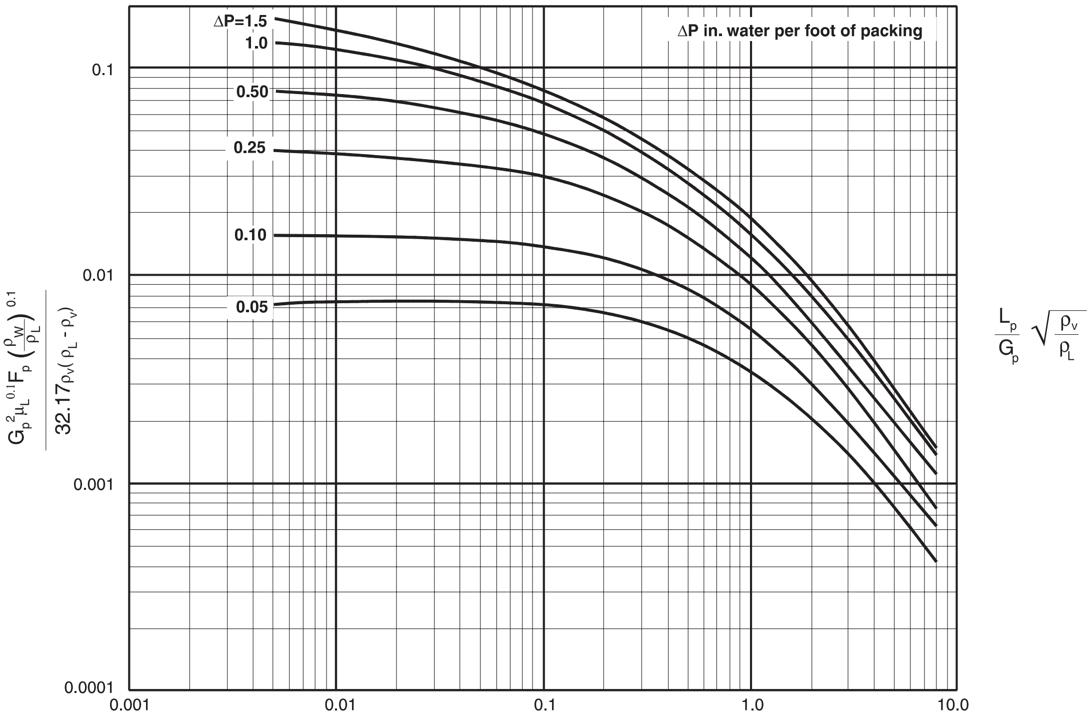

FIG. 19-27

Typical Packing Depths[18]

System	L/G, lb/(hr-sq ft)	Diam. in.	Packing		Bed depth, ft	HETP, ft	HTU, ft	System press., psia	ΔP, in H_2O/ ft pkg	% Overhead
			Type	Size, in.						
Absorber	8300/ 11000	36	Pall rings	2	23.0	2.8	–	865	0.55	–
L.O.-Top fractionator	3600/ 4700	36	Pall rings	2	17.0	2.5	–	157	0.12	–
L.O.-Bottom fractionator	10600/ 5600	48	Pall rings	2	17.0	2.8	–	157	0.30	–
Deethanizer top	11000/ 4600	18	Pall rings	1½	20.0	2.9	–	300	0.20	–
Deethanizer bottom	19000/ 4500	30.0	Pall rings	2	18.0	3.3	–	300	0.30	–
Depropanizer top	5700/ 4200	23.4	Pall rings	1½	16.0	3.2	–	270	0.30	–
Depropanizer bottom	5700/ 4200	23.4	Pall rings	1½	24.0	2.4	–	270	0.30	–
Debutanizer top	1900/ 3100	19.5	Pall rings	1½	12.0	2.4	–	90	0.12	–
Debutanizer bottom	1900/ 3100	19.5	Pall rings	1½	18.0	2.0	–	90	0.12	–
Pentane-iso-pentane	2100/ 1900	18.0	Pall rings	1	9.0/7.6	1.5	–	Atmos.	0.40	–
Light and heavy naphtha	660/ 1250	15.0	Pall rings	1	10.0	2.00	2.05	100 mm. Hg	1.10	95.0
	320/ 600	15	Pall rings	1	10.0	3.25	2.50	100 mm. Hg	0.20	95.0
	620/ 1450	15	Pall rings	1	10.0	1.45	1.25	100 mm. Hg	1.75	97.5
	260/ 650	15	Pall rings	1	10.0	1.45	1.30	100 mm. Hg	0.20	97.5
	370/ 850	15	Intalox	1	10.0	2.30	1.90	100 mm. Hg	0.80	93.0
	210/ 500	15	Intalox	1	10.0	2.70	2.10	100 mm. Hg	0.22	99.0
	340/ 800	15	Raschig rings	1	10.0	1.95	1.40	100 mm. Hg	1.11	91.6
	210/ 500	15	Raschig rings	1	10.0	2.70	1.97	100 mm. Hg	0.40	96.5
Iso-octane Toluene	1970/ 2300	15	Pall rings	1	10.0	1.34	1.35	Atmos.	0.70	82.0
	950/ 2100	15	Pall rings	1	10.0	1.90	2.17	Atmos.	0.10	76.0
	2100/ 2660	15	Pall rings	1	10.0	0.80	1.02	Atmos.	1.70	84.0
	960/ 1200	15	Pall rings	1	10.0	1.53	1.42	Atmos.	0.15	74.0
	1110/ 1300	15	Pall rings	1	10.0	1.34	1.29	100 mm. Hg	1.08	92.5
	510/ 600	15	Pall rings	1	10.0	1.88	1.81	100 mm. Hg	0.20	87.0
	1020/ 1300	15	Pall rings	1	10.0	1.67	1.60	100 mm. Hg	1.14	92.0
	470/ 600	15	Pall rings	1	10.0	2.07	2.00	100 mm. Hg	0.20	89.0

and be redistributed at 20 foot intervals or every 10 column diameters, whichever is smaller.

- Plugging—Packed towers will be more susceptible to plugging from dirt and other foreign materials.
- Packing Height—The HETP for a packed column is an uncertain matter. Often they must be determined by testing or field applications. HETP's can vary from a few inches to several feet.
- Inspection—It is difficult to inspect internals without removing all the contents of a column.

MECHANICAL CONSIDERATIONS

Once the diameter and height of a fractionator have been determined, consideration must be given to the column internals and heat exchanger arrangements. There are many options in each of these areas and a sound design must consider many details to ensure proper operation. For additional information on heat exchangers see Section 9.

Reboiler Arrangements[19]

There are several reboiler configurations which have been used in fractionation service.[20] The most common types are:

- Forced circulation
- Once-through natural circulation
- Vertical thermosyphon
- Horizontal thermosyphon
- Flooded bundle (kettle type)

These types of reboilers are shown in Fig. 19-30 through Fig. 19-35. Modifications of these types are also used; for example, forced circulation reboilers are not necessarily in vertical orientation. Also, internal "stab-in" type reboilers have been used but are not common.

Each type of reboiler has its special advantages and disadvantages. Selection criteria of a reboiler configuration should include:

- Heat transfer surface required
- Space and piping requirements
- Ease of maintenance
- Fouling tendency
- Operating stability
- Operating cost
- Column and skirt elevation requirements

Forced Circulation — A typical arrangement for forced circulation reboilers is shown in Fig. 19-30. This type is also called a pumped-through reboiler. All the liquid from the bottom tray is carried by a downcomer to below the liquid level in the bottom of the column. The liquid can be circulated through the reboiler as many times as is economically feasible to control the percent vaporization. The bottom product is drawn off the line to the reboiler. This type arrangement is usually used in installations where piping pressure drop is so high that natural circulation is not practical. Remotely located reboilers or installations where the reboiler heat is provided by several sources may require forced circulation. The main advantages of forced circulation are the abilities to closely control circulation rate and to handle viscous or solid containing

FIG. 19-28

Example Effect of Packing Size on HETP

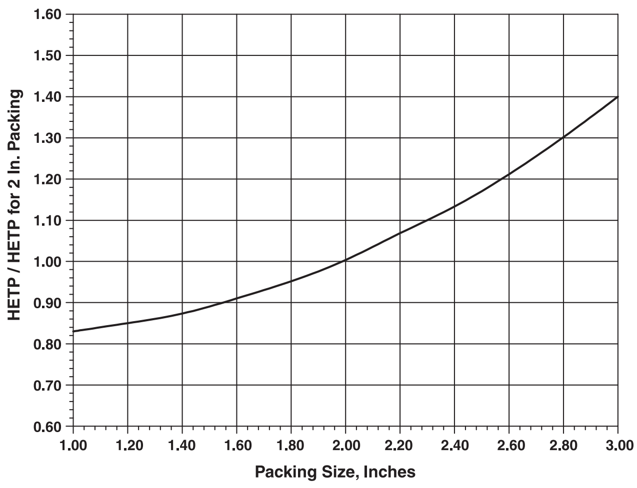

FIG. 19-29

Example Packed Column Internals[29]

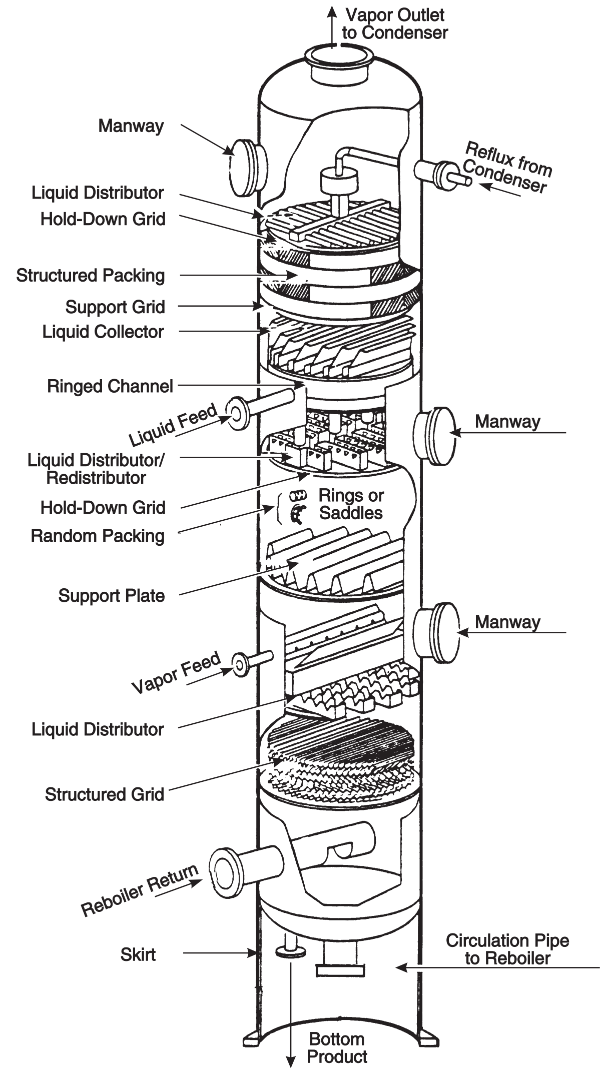

fluids. The continuous operating cost of the pump makes natural circulation designs more desirable.

Natural Circulation — By far the greater number of reboiler installations employ natural circulation. This can be achieved in either of two ways as shown on Fig. 19-31a and b. In Fig. 19-31a all the liquid on the bottom tray is circulated directly to the reboiler, where it is partially vaporized. The unvaporized portion, on being disengaged under the bottom tray, is withdrawn as bottom product. In Fig. 19-31b the liquid passes through the downcomer below the liquid level of the column as in forced circulation. The bottom liquid is free to recirculate through the reboiler as many times as the hydrostatic pressure difference between Z_1 and Z_3 will permit. Because there is no opportunity for recirculation in the arrangement in Fig. 19-31a, it is called a once-through reboiler arrangement. Fig. 19-31b is referred to as a recirculating reboiler.

Vertical Thermosyphon — The vertical thermosyphon reboiler shown in Fig. 19-32 is usually a one tube pass-one shell pass exchanger with the channel end up. The upper tube sheet is placed close to the liquid level in the bottom of the fractionation column. This type exchanger is capable of high heat transfer rates (minimum area) and requires simple piping. It is not easily fouled and has generally good controllability. Because of the vertical orientation, additional column skirt is required and maintenance can be awkward.

Recirculation Ratios — The recirculation ratio is determined from the difference between hydrostatic head in the column corresponding to the tube length of the reboiler and the weight of the vapor-liquid mixture.

Recirculation ratios of 4:1 or greater are usually employed. Referring to the vertical thermosyphon in Fig. 19-32, there are five principal resistances:

- Frictional pressure drop through the inlet piping
- Frictional pressure drop through the reboiler
- Expansion or acceleration loss due to vaporization in the reboiler
- Static pressure of a column of mixed liquid and vapor (Z_3) in the reboiler
- Frictional pressure drop through the outlet piping

Detailed calculation of the hydraulics of this system is complex due to the two-phase flow involved.[20] The simplified method presented by Kern[19] can be used to estimate this system:

Expansion Loss Due to Vaporization — This is taken as two velocity heads based on the mean of the inlet and outlet densities.

$$\Delta P_1 = \frac{G^2}{144\, g_c\, \rho_{avg}} \qquad \textbf{Eq 19-23}$$

Particularly where the recirculation ratio and the operating pressure are great, the difference in the densities between the inlet and outlet is not very large and the expansion loss is negligible.

Weight of a Column of Mixed Liquid and Vapor— This is difficult to evaluate if precision is required, since the expansion of the vapor is a function of the recirculation ratio, average specific volume of the vapor, coefficient of expansion of the liquid, etc. For nearly all practical cases it may be assumed that the variation of the density is linear between the inlet and the outlet. If v is the specific volume at any height, h, in the vertical tube whose total length is L_t and whose inlet and outlet specific volumes are v_i and v_o:

$$v = v_i + \frac{(v_o - v_i)h}{L_t} \qquad \textbf{Eq 19-24}$$

If the weight of the column of mixture is m, the change in weight with height is dm, and if a is the cross-section flow area,

$$dm = \frac{a}{v}\, dh \qquad \textbf{Eq 19-25}$$

If the static pressure of the column of liquid and vapor is designated by $Z_3\rho_{avg}$ and the cross-section area, a, is unity, then:

$$Z_3\rho_{avg} = \int^{L_t} \frac{dx}{v} = \int \frac{dx}{v_i + (v_o - v_i)\, x/L_t} \qquad \textbf{Eq 19-26}$$

Integrating and dividing by 144 to obtain the static head per square inch:

$$\frac{Z_3\, \rho_{avg}}{144} = \frac{2.3\, L_t}{144\,(v_o - v_i)} \log\frac{v_o}{v_i} \qquad \textbf{Eq 19-27}$$

Rational solutions for the recirculation ratio can be established by taking all the heads in the circuit into account as functions of the mass velocity, G, and upon solution for G, the recirculation rate can be obtained directly. Because the gravity of the reboiler outlet mixture also varies with the recirculation ratio, the expression becomes complex and it is simpler to solve

FIG. 19-30

Forced-Circulation Reboiler Arrangement

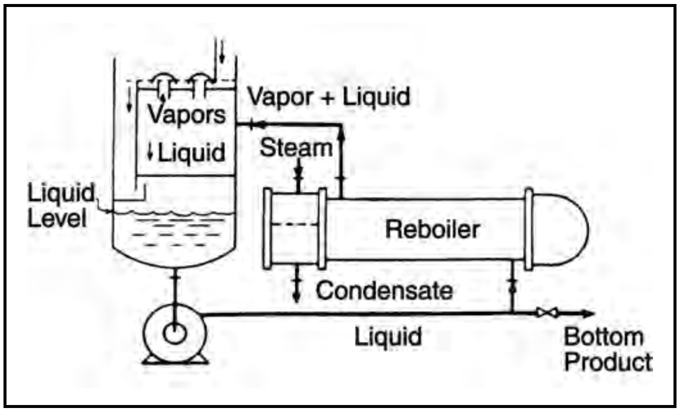

FIG. 19-31

Natural-Circulation Reboiler Arrangements

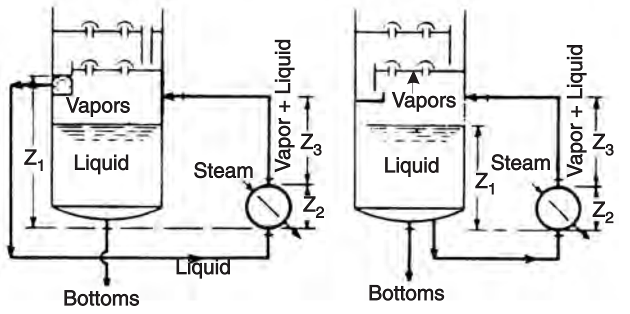

(a) One-through Reboiler

(b) Recirculating Reboiler

FIG. 19-32

Vertical Thermosyphon Reboiler Connected to Tower

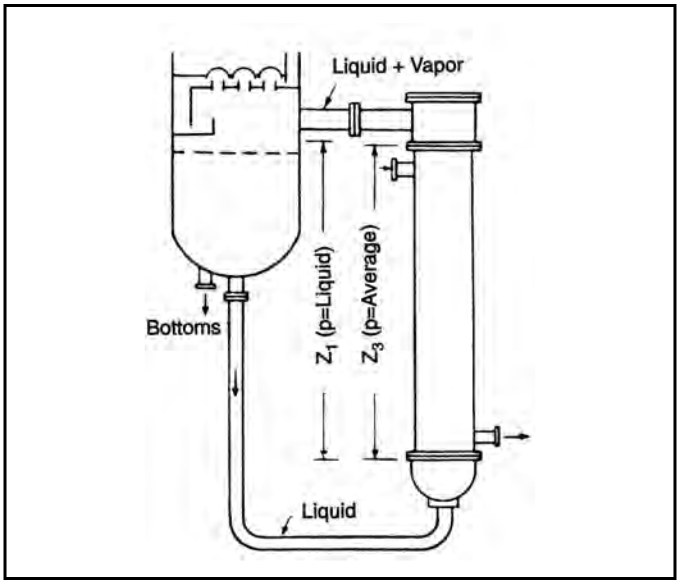

by trial and error. If the height of an existing reboiler is given, the recirculation ratio can be computed. If the recirculation ratio is given, the required head, $Z_1\rho_L$, may be computed.

Example 19-6 — A vertical thermosyphon reboiler is to provide 40,800 lb/hr of vapor which is almost pure butane. The column operates at a pressure of 275 psig corresponding to a nearly isothermal boiling point of 228°F. Heat will be supplied by saturated steam at 125 psig. A recirculation ratio of 4:1 or greater should be employed. What is the optimum exchanger to fulfill this requirement? (Assume negligible inlet and outlet piping pressure drops.)

Given:

Tube Data:

3/4 in., 16 BWG, 1-in. triangular pitch
I.D. = 0.62 in.
Surface Area = 0.1963 ft^2/ft
Internal Tube Area = .302 $in.^2$
Vapor Density = 2.27 lb/ft^3
Liquid Viscosity = 0.1 cp
Liquid Specific Gravity = 0.43

Solution Steps

Heat balance:

Enthalpy of liquid at 228°F and 290 psia = 241 Btu/lb
Enthalpy of vapor at 228°F and 290 psia = 338 Btu/lb
$Q = 40{,}800\ (338 - 241) = 3{,}960{,}000$ Btu/hr
Steam, 3,960,000/868 = 4570 lb/hr
Isothermal boiling, $\Delta T = LMTD = 353° - 228° = 125°F$

Trial 1:

When establishing reboiler surface the first trial should always be taken for the maximum allowable flux (12,000 Btu/ft^2):

$$A_t = \frac{Q}{Q/A_t} = \frac{3{,}960{,}000}{12{,}000} = 330\ ft^2$$

Assume 16′0″ long tubes to reduce the shell diameter and provide the cheapest reboiler. However, the long tubes will also require the greatest elevation of the column.

$$\text{Number of tubes} = \frac{330}{(16)\ (0.1963)} = 105$$

Static pressure of reboiler leg (Eq 19-27):

Vapor density,

$$\rho_v = \frac{58}{(359)\ (688/492)\ (14.7/290)} = 2.28\ lb/ft^3$$

$$v_v = \frac{1}{2.28} = 0.44\ ft^3/lb$$

$$v_L = v_i = \frac{1}{(62.4)\ (0.43)} = 0.0373\ ft^3/lb$$

Weight flow of recirculated liquid = (4) 40,800
= 163,200 lb/hr

Total volume out of reboiler:

Liquid	(163,200)	0.0373	= 6,100 ft^3
Vapor	(40,800)	0.44	= 17,950 ft^3
Total			24,050 ft^3

$$v_o = \frac{24{,}050}{(163{,}200 + 40{,}800)} = 0.1179\ ft^3/lb$$

Static pressure of leg, (Eq 19-27)

$$\frac{Z_3\ \rho_{avg}}{144} = \frac{(2.3)\ 16}{144\ (0.1179 - 0.0373)} \log \frac{0.1179}{0.0373}$$

$$= 1.59\ psi$$

Frictional resistance:

Flow area:

$$a_t = N_t \frac{a'_t}{144} = (105) \frac{0.302}{144} = 0.220\ ft^2$$

$$G_t = \frac{w}{a_t} = \frac{163{,}200 + 40{,}800}{0.220} = 927{,}273\ lb/(hr \cdot ft^2)$$

At 228°F, $\mu = (0.10)\ 2.42 = 0.242\ lb/(ft \cdot hr)$

$$D' = \frac{0.62}{12} = 0.0517\ ft$$

$$Re = \frac{D'\ G_t}{\mu} = \frac{(0.0517)\ 927{,}273}{0.242} = 198{,}100$$

$$f = 0.000127\ ft^2/in.^2$$

$$s_{avg} = \frac{[0.43 + (1/0.1179\ )\ /\ 62.4]}{2} = 0.283$$

$$\Delta P_t = \frac{f\ G_t^2\ L}{(5.22)\ (10^{10})\ Ds_{avg}}$$

$$= \frac{(0.000127)\ (927{,}273)^2\ (16)}{(5.22)\ (10^{10})\ (0.0517)\ (0.283)} = 2.29\ psi$$

Total resistance = 1.59 + 2.29 = 3.88 psi

Driving force, $\frac{Z_1\ \rho_L}{144} = (16)\ (0.43)\ (62.4/144) = 2.99$ psi

The resistances are greater than the hydrostatic head can provide; hence the recirculation ratio will be less than 4:1. Of the resistances, the frictional pressure drop may be reduced by the square of the mass velocity if the tubes are made shorter. The other alternative is to raise the liquid level in the column above the upper tube sheet.

Trial 2:

Assume 12′0″ tubes and 4:1 recirculation ratio:

$$\text{Number of tubes} \cong 330\ \text{ft}^2 = \frac{330}{(12)\,(0.1963)} = 140$$

$$v_i = 0.0373 \text{ as before}$$

$$v_o = 0.1179$$

Static pressure,

$$\frac{Z_3\,\rho_{avg}}{144} = \frac{(2.3)\,12}{144\,(0.1179 - 0.0373)} \log \frac{0.1179}{0.0373} = 1.19 \text{ psi}$$

Frictional resistance:

$$a_t = (140)\,\frac{0.302}{144} = 0.294\ \text{ft}^2$$

$$G_t = \frac{204{,}000}{0.317} = 694{,}000\ \text{lb/(hr} \bullet \text{ft}^2)$$

$$Re = \frac{(0.0517)\,694{,}000}{0.242} = 148{,}000$$

$$f = 0.000135\ \text{ft}^2/\text{in.}^2$$

$$\Delta P_t = \frac{(0.000135)\,(694{,}000^2)\,(12)}{(5.22)\,(10^{10})\,(0.0517)\,(0.285)} = 1.01 \text{ psi}$$

$$\text{Total resistance} = 1.19 + 1.01 = 2.20 \text{ psi}$$

$$\text{Driving force,} \quad \frac{Z_1\,\rho_L}{144} = (12)\,(0.43)\,\frac{62.4}{144} = 2.24 \text{ psi}$$

Since the driving force is slightly greater than the resistances, a recirculation ratio better than 4:1 is assured.

If the solution is not reached, a plot of Δ P (driving force – resistance), can be developed to determine the maximum length to achieve a pressure balance where the driving force exceeds the resistance. Fig. 19-33 shows a plot for this example at various lengths.

Horizontal Thermosyphon—The horizontal thermosyphon (Fig. 19-34) is similar in nature to the vertical thermosyphon reboiler. However, less skirt height is required to provide circulation head. It consists of centrally located inlet and outlet nozzles, a vertical support plate between the nozzles, and a horizontal longitudinal baffle. The liquid enters the bottom, flowing in two directions around the longitudinal baffle and back together at the outlet. Vapor disengagement takes place in the column. The horizontal thermosyphon can be natural or forced circulation.

Kettle Reboilers—Kettle reboilers are quite different in their configuration than other types (Fig. 19-35). Liquid from the bottom tray is gravity fed to the reboiler from a draw-off on the bottom of the column. A weir maintains the liquid level

Fig. 19-33

Thermosyphon Reboiler Driving Force Curve

FIG. 19-34

Horizontal Thermosyphon Reboiler

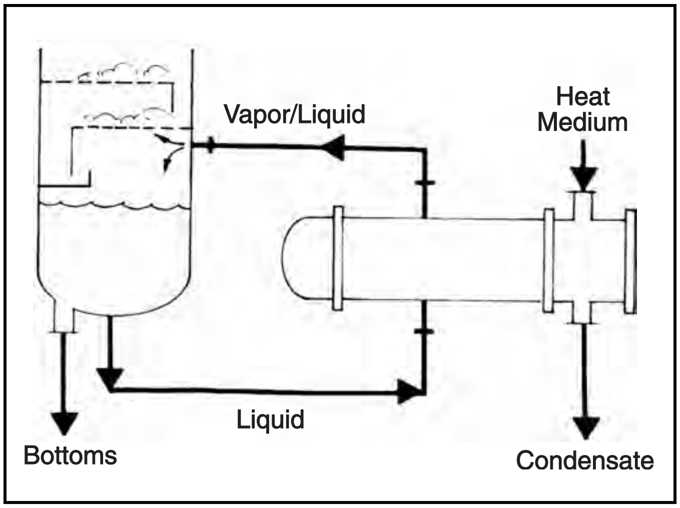

FIG. 19-35

Kettle Reboiler Arrangement

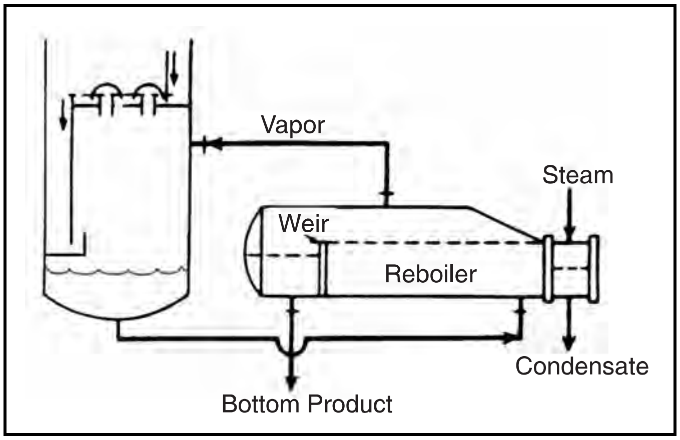

FIG. 19-36

Example Top Feed Nozzles[21]

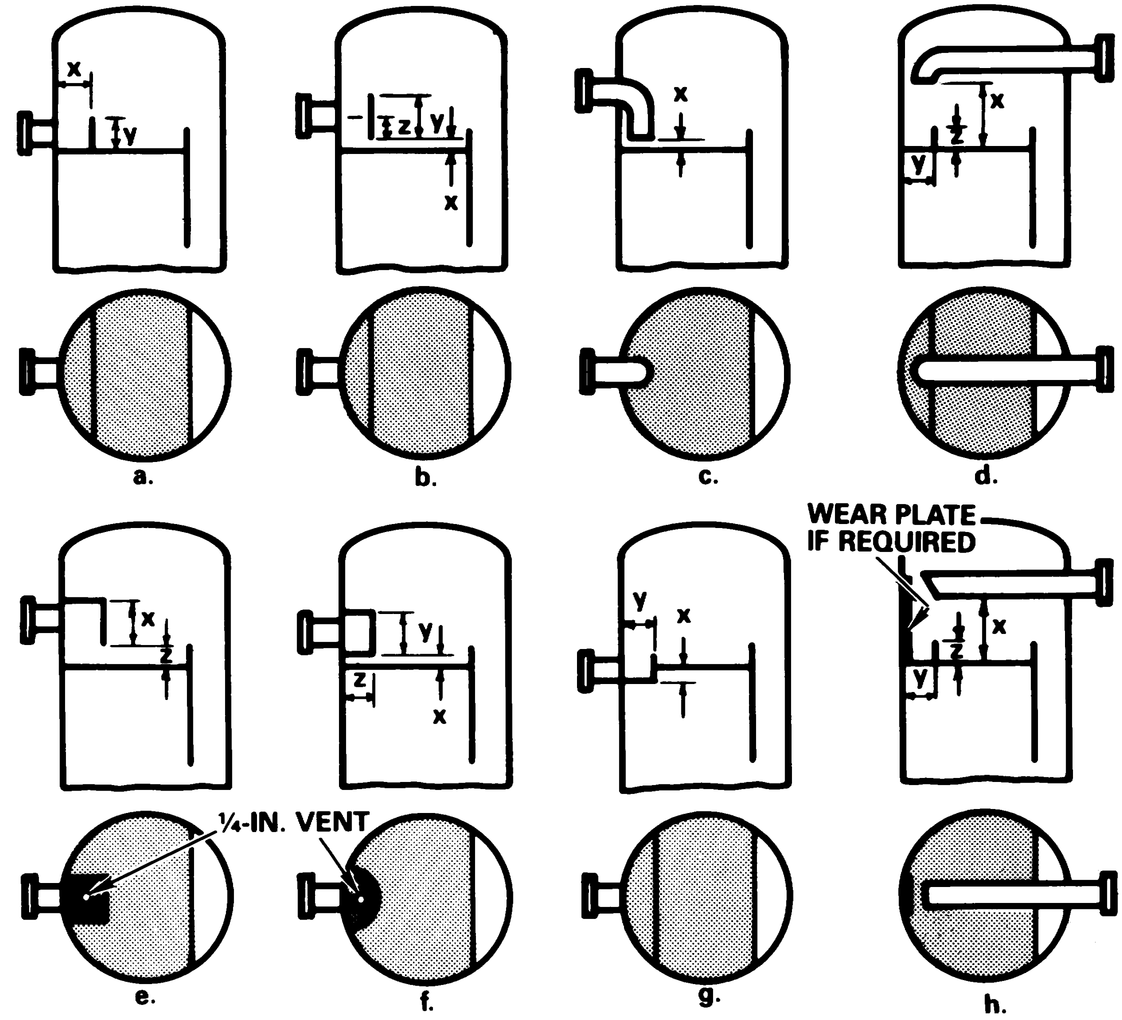

FIG. 19-37

Design Parameters for Top Feed Nozzles[21]

Dimensions for top feed/reflux inlet arrangements								
	See Fig. 19-36							
	a	b	c	d	e	f	g	h
Maximum nozzle dia., in.	6	–	–	6	–	–	6	–
Note	3	3	–	–	1	1	–	2
Pure-liquid feed								
Dimension x, in.	W_d	h_{cl}	$d_n/2$	>12	$2d_n$	$d_n/2$	4	>12
Dimension y, in.	4 to 6	$2d_n$	–	W_d	$2d_n$	$2d_n$	W_d	W_d
Dimension z, in.	–	d_n	–	4 to 6	d_n	$1.5d_n$	–	4 to 6
Vapor/liquid feed	NS		NS			NS	NS	
Dimension x, in.		$2d_n$		>12	$2d_n$			>12
Dimension y, in.		$2d_n$		W_d	$2d_n$			W_d
Dimension z, in.		d_n		4 to 6	$2d_n$			4 to 6

d_n = Inlet pipe dia., in.
h_{cl} = Clearance under downcomer, in.
W_d = Downcomer width, in.
NS = Not suitable

Note 1: Drill a ¼-in. vent hole on top.

Note 2: Wear plate may be required.

Note 3: Ensure nozzle enters behind the baffle. If it does not, hydraulic jump could be a problem.

Internal inlet pipes should be removable for maintenance.

in the reboiler such that the tube bundle is always submerged. Vapor disengaging space is provided in the exchanger. The vapor is piped back to the column to provide stripping vapor for the bottom tray. Bottom product is drawn from the reboiler.

Kettle reboilers are attractive due to the ease of control. No two-phase flow or circulation rate considerations are required. The kettle is also equivalent to a theoretical tray. Due to the vapor disengagement requirement, kettles are constructed with an expanded shell. The additional cost of this shell is offset to some extent by a reduced tower skirt requirement.

Column Internals

The most common causes of startup and operating problems are the column internals. These items are usually small details that are often overlooked and later become operating difficulties. Correct location and orientation of inlet and outlet nozzles and other internal considerations must be addressed to eliminate problems. Kister[21] presented a series of articles which discussed these areas in detail.

Top Feed Nozzles — Fig. 19-36 illustrates various arrangements used for top-tray feed and reflux nozzles. Fig. 19-37 lists factors and restrictions in each design. For cost reasons, arrangements of Fig. 19-36a, b, c, e, and f are preferred. However, for a two-phase stream only b, d, e, and h are suitable. Most installations use arrangement a or c for all-liquid feed while b and e are popular for a two-phase feed.

Tray sections and baffles that are contacted by an entering feed should be strengthened. Feed nozzles and internal liquid distributors should be anchored to the tower shell. Feed lines containing two phase flow should be designed to minimize slugging which causes column instability and possible tray damage. For liquid feeds, the nozzle velocity should not exceed 3 ft/sec.

Intermediate Feed Nozzles — Fig. 19-38 shows various methods for introducing intermediate column feeds. Fig.19-39 summarizes the application area for each design. Fig. 19-38a is only suitable for subcooled liquids. Vapor containing or hot feeds would cause flashing in the downcomer and loss of capacity. Fig. 19-38b is only suitable for low-velocity liquid feeds and is seldom recommended. Fig. 19-38c and d show a similar nozzle location with a baffle to direct the feed stream. These are both designed for two-phase streams with d being the preferred arrangement. Fig. 19-38c can be used for virtually any feed except for high velocity feeds where a baffle plate is added as in Fig. 19-38f.

Bottom Vapor Inlet[22] — The optimum vapor inlet below the bottom tray is shown at location A in Fig. 19-40. The vapor is introduced parallel to the bottom downcomer at a recommended spacing of 24 in. below the bottom tray. A vapor inlet nozzle, causing impingement of the vapor stream against the downcomer and/or liquid overflow as shown by location B, should be provided with vapor inlet baffle or piping. The vapor velocity can be controlled by the hood outlet area. For multipass trays, it is very important to feed each compartment equally and allow for vapor equalization between sections.

Liquid Outlet — Sufficient residence time must be provided in the liquid draw-off sump. Fig. 19-41 presents recommended residence times for various situations. These guidelines are intended to provide sufficient times for vapor disengagement, to smooth out column upsets, and to give operating personnel time to correct operating problems. For

FIG. 19-38

Example Intermediate Feed Nozzle Arrangements[21]

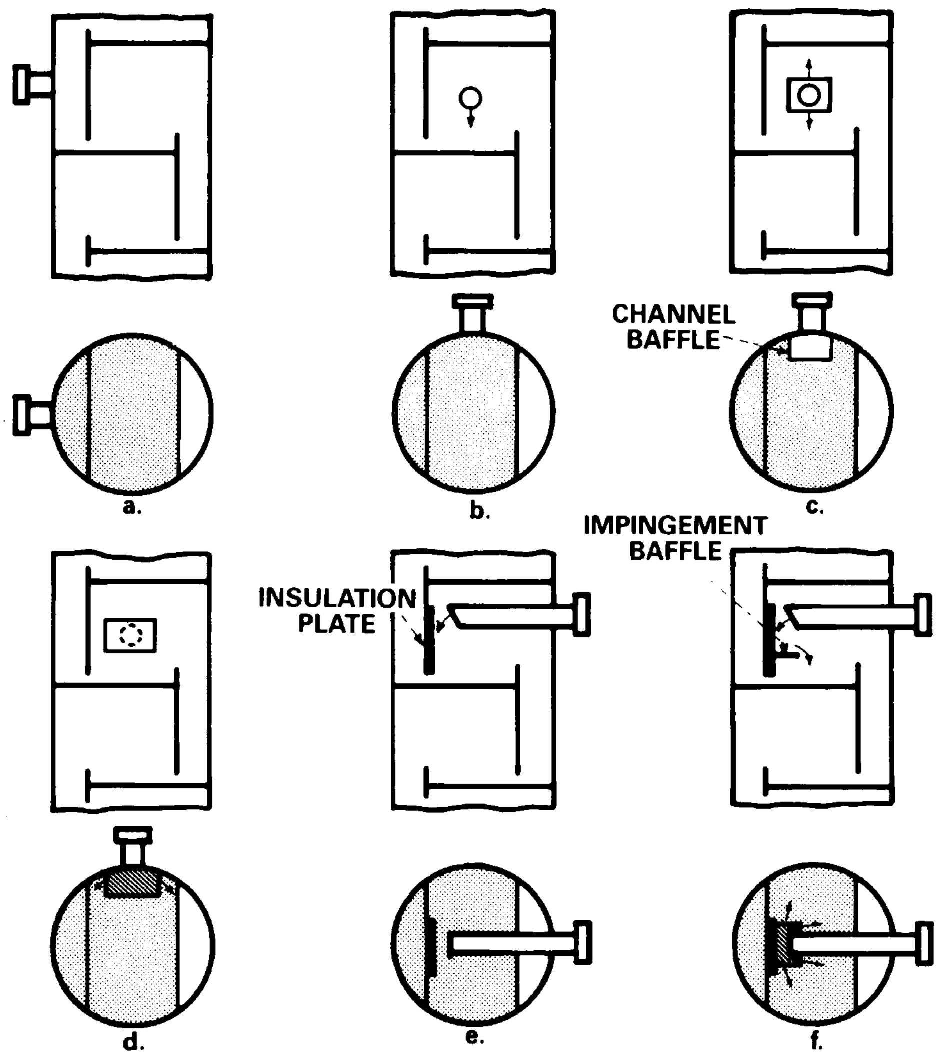

large residence time requirements, an external vessel should be considered in lieu of a large sump volume.

Bottom Sump Arrangements — A common design practice is to divide the bottoms sump into a reboiler-feed compartment and bottoms-drawoff compartment by installing a preferential baffle. Typical arrangements are shown in Fig. 19-42. The baffle has the advantage of providing an additional theoretical tray, supplying a constant head to the reboiler, and increasing the bottoms-outlet sump residence time. The installation of such a baffle is recommended when thermosyphon reboilers are used.

Each sump must have its own drainage facilities. This can frequently be achieved by drilling a hole through the baffle, or by using an external dump line at a low point to interconnect the liquid outlet lines from each compartment.

Either one of the arrangements shown in Fig. 19-42a or b is satisfactory. The arrangement of Fig. 19-42b has slightly better mass-transfer characteristics; however, it is somewhat more complicated than that of Fig. 19-42a. A baffle similar to that on the left-hand side of Fig. 19-42b can also be incorporated in arrangements such as shown in Fig. 19-42c and d.

The arrangement of Fig. 19-42d is preferable to that of Fig. 19-42c for two-pass trays. The latter forces the vapor to flow through a curtain of liquid while ascending to the first tray, which may cause entrainment or premature flooding.

Draw-off Arrangements—Total draw-off is normally accomplished with a chimney tray or draw pan as indicated in Fig. 19-43. The chimney tray has an advantage over the draw pan because it catches tray weepage during startup and at low vapor rates. Chimneys are normally sized for approximately 15% of tower area. The chimneys should be located or hooded to prevent liquid flow downward through the chimney. Elevating the draw nozzles flush with the draw tray in many cases eliminates the need for weep holes. A spill-over baffle can be provided for the draw pan to maintain tower circulation for

FIG. 19-39

Intermediate Feed Nozzle Applications[21]

	See Fig. 19-38					
	a	**b**	**c**	**d**	**e**	**f**
Cold-liquid feed	Yes	Yes	Yes	Yes	Yes	Yes
Vapor/liquid feed	No	No	Yes	Yes	Yes	Yes
Vapor feed	No	No	Yes	Yes	Yes	Yes
Hot feed	No	Yes	Yes	Yes	Yes*	Yes*
High-velocity feed	No	No	No	Yes	No	Yes
High-pressure application	No	Yes	Yes	Yes	Yes	Yes
Downcomer capacity critical	No	Yes	Yes	Yes	Yes	Yes

*Assuming insulation plate is provided.

cases where a draw-off may not be required during operation. A vortex breaker is suggested for outlet nozzles.

If the liquid on the chimney tray seals the downcomer from the tray above, particular care must be taken with the design of this downcomer. The liquid in the downcomer is aerated, while most of the liquid on the tray is degasified. The degasified liquid on the tray produces a greater hydrostatic head than the column of aerated liquid in the downcomer. This effect is aggravated if two phases are separated. If these effects are not allowed for, and sufficient height is not provided, downcomer backup may exceed the spacing between the liquid level and the tray above, and lead to premature flooding.

Fig. 19-44 shows two types of partial draw-off arrangements. When a chimney tray is used, a partition (sometimes insulated by application of two plates) can be provided to allow a draw-off and return on the same tray. Elevating the partition will determine total separation or recycling. The return nozzle should be located above the liquid level if vapor content is expected.

Partial draw from a recessed pan is frequently used. The draw pan saves shell length at the sacrifice of surge capacity. It is advisable to provide a positive downcomer seal.

FIG. 19-40

Bottom Vapor Inlet[22]

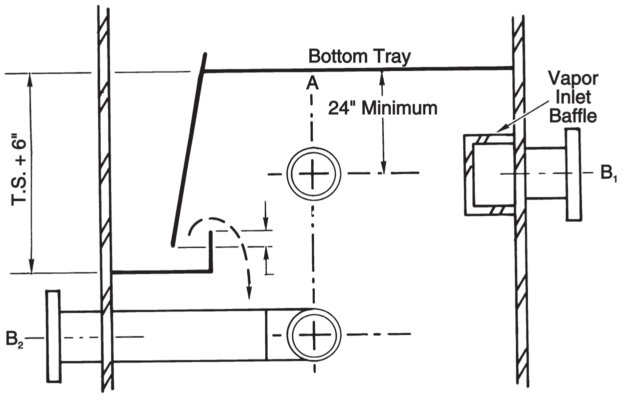

Water draw-off has been successfully accomplished by using the design shown in Fig. 19-45. The perforated plate normally contains 25% of the pan area as hole area. Water draw pans are usually sloped for multipass trays in large towers. A weld-in pan with a flush fitting draw nozzle is recommended.

Mechanical Design

Special care should be given to designing the trussing structure at heavily loaded areas, such as draw pan and draw trays where additional liquid levels are anticipated.

Where total draw-off arrangements are required, it is generally recommended that seal welding should be applied in lieu of gasketing, as gasketing may not maintain its sealing effectiveness at operating conditions. For large towers and higher temperatures, expansion joints should be provided. Good inspection can, in many cases, detect errors which could lead to column operation problems. It is, therefore, important

FIG. 19-41

Residence Time for Liquid in the Sump[21]

Operating condition	Minimum residence time, min
Liquid is withdrawn by level control and feeds another column directly by pressure.	2
Liquid is withdrawn by level control and pumped away. Spare pump starts manually.	3
Liquid is withdrawn by level control and pumped away. Spare pump starts automatically.	1
Liquid is withdrawn by level control and feeds a unit that is some distance away or that has its instruments on a different control board.	5-7
Liquid is withdrawn by flow control.	3-5
Liquid flows through a thermosyphon reboiler without a level controller, to maintain a level in the sump.	1

FIG. 19-42

Example Baffle Arrangements for Bottom Sumps for Recirculating Reboilers[21]

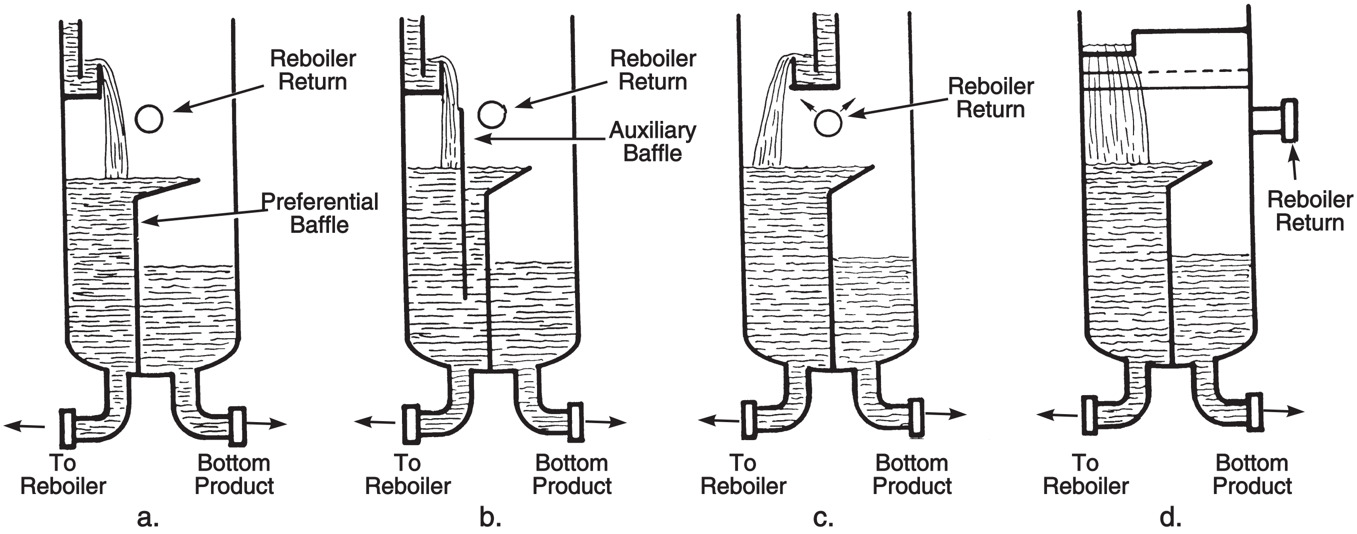

FIG. 19-43

Example Total Draw-off[22]

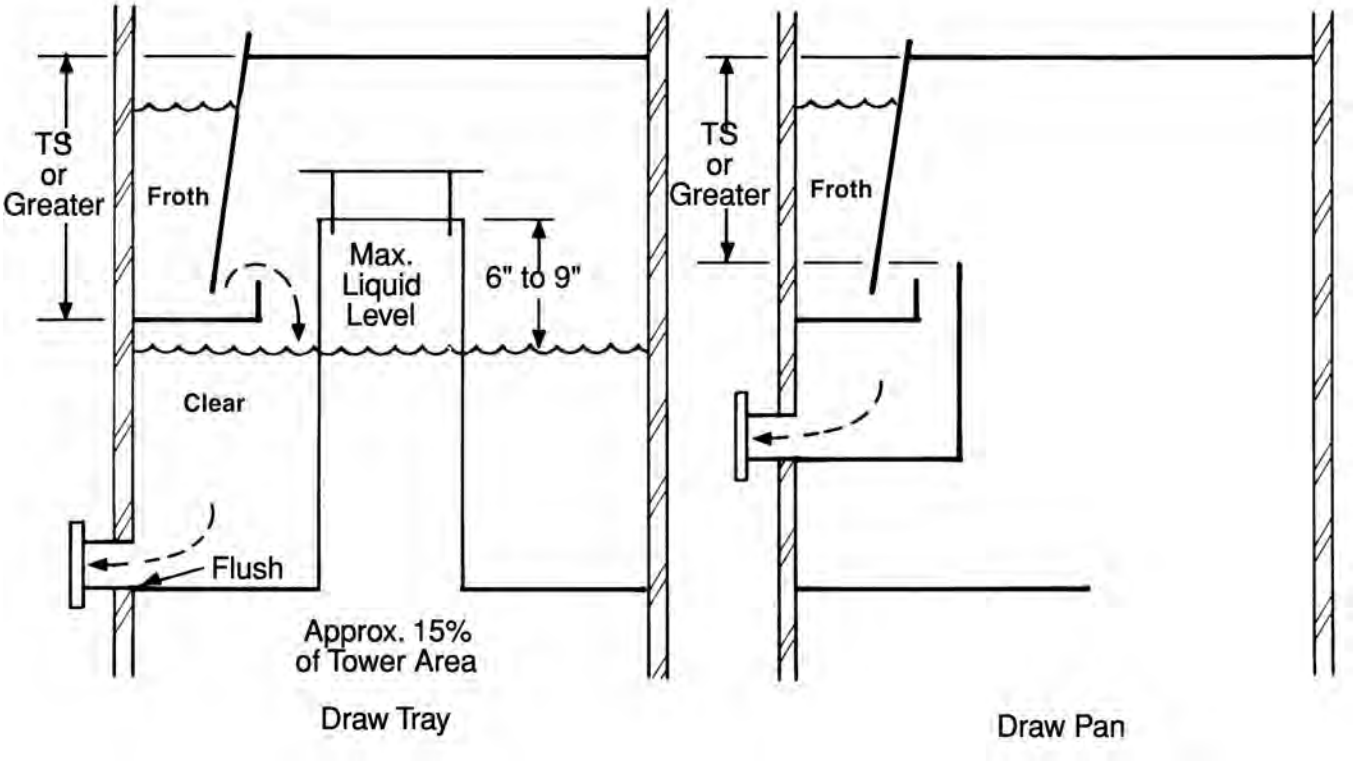

FIG. 19-44

Example Partial Draw-off[22]

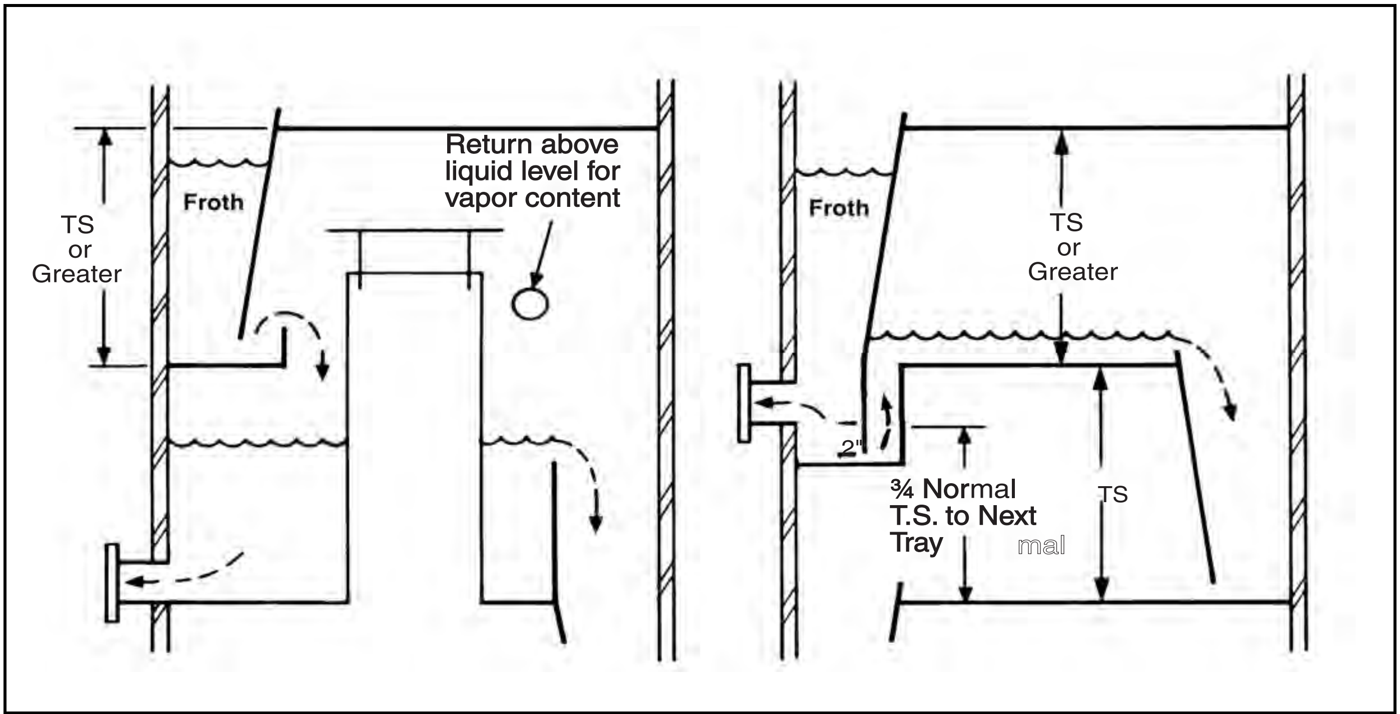

that an inspector be well informed on internal design fundamentals including feed and draw-off arrangements. The following recommended inspection check list can be an invaluable tool for discovering errors and providing a record for future reference:

- Weir levelness
- Tray levelness
- Is hardware properly installed?
- Have correct materials been used (general spot check)?
- Are downcomers properly sealed to prevent vapor from escaping into downcomer area?

FIG. 19-45

Example Water Draw-off[22]

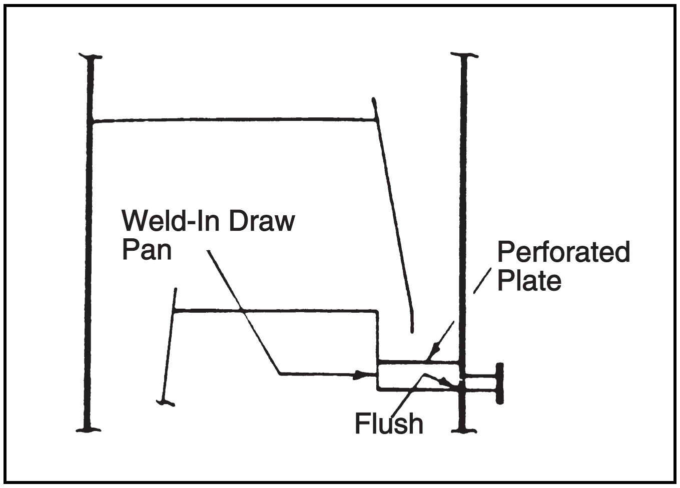

- Are nozzles oriented properly with respect to feed and draw-off requirements?
- All special internal designs as well as feed and draw nozzles should be checked for restrictions
- Are trays clean and clear of obstruction from foreign material?
- Are all internal parts secured?

FIG. 19-46

Example Feed/Product Exchanger

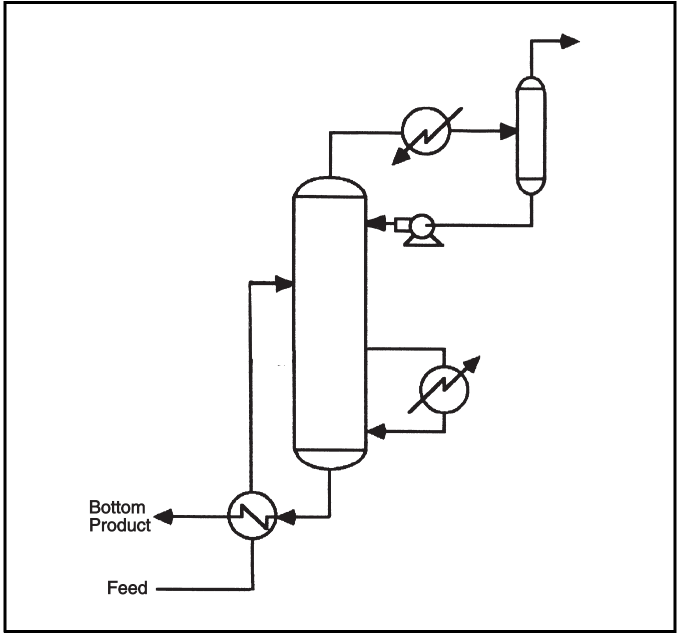

ENERGY EFFICIENT DESIGN CONSIDERATIONS

Fractionators require energy input in the form of heat to the reboiler. Regardless of the exact arrangement, fuel is often required and represents a major operating cost. Minimization of fuel usage is a common design goal.

To provide reflux for the fractionator, a utility is required to remove the heat to an appropriate heat sink. For columns utilizing air or water cooling, all the utilities use a common temperature heat sink. However, for columns using refrigeration, the temperature level is very important. A lower temperature refrigeration level increases both the capital and operating cost of a unit. If the condenser duty can be applied to a higher temperature system, considerable savings can be realized.

Feed/Product Exchangers

One of the simplest ways to reduce the reboiler fuel requirement is to preheat a liquid feed stream. This can be accomplished with a feed/product exchanger as shown in Fig. 19-46.

In general this heat input will decrease the reboiler duty. However, since the feed is now partially vaporized, the overhead condenser duty will tend to increase (see Eq 19-9). This increased condenser duty must be offset by reboiler duty. The net reboiler savings will be close to, but not equal to, the heat input to the feed. The net effect will depend on many system parameters; but feed/product exchange is generally an attractive heat conservation application.

Side Heaters

Side heaters (Fig. 19-47) can be used to add heat to a tower several trays up from the reboiler. Because of the temperature gradient in the column, this heat is applied at a much lower temperature than the reboiler. The heat source for this side heater can be any stream which requires cooling and is at a high enough temperature level to be useful. Often, the bottom product is used to side-heat the column. In cryogenic plants, the feed gas often supplies the reboil heat.

One penalty for side heating is the additional column height required for the liquid draw-off tray and vapor disengagement of the two-phase return stream. Typically, this will add about 6-8 feet to the column height.

For small amounts of side heat up to 25% of the reboiler duty, the side heater has little effect on the column design and condenser duty. As this heat is increased, the condenser duty will rise, requiring more total heat and/or more trays. In general, a good rule of thumb is to limit the side heat duty to no more than 50% of the total heat requirement.

One other possible benefit of side heating is that tower loading below the side heat tray is reduced. In many towers the bottom trays have the greatest loading. Judicious application of side heating can "smooth" the column vapor and liquid profiles in the lower section, reducing the required diameter.

Side Coolers/Condensers

Side coolers can be used to extract heat from a tower at an intermediate point above the feed tray. Due to the tower gradient this heat removal can be accomplished with a higher temperature cooling medium. This can be particularly attractive if the condenser uses refrigeration.

For large quantities of heat removal a side condenser can be effective. However, this is a bit more complicated than a single phase cooler. A side condenser requires a vapor draw-off and provision for a two phase return and separation section.

One place where side coolers are used is in absorber applications. The cooler draw-off is located in the middle part of the absorber to remove the heat of absorption from the liquid phase. This helps limit the temperature rise throughout the tower thus increasing absorption recovery.

Heat Pumping

One technique for energy conservation in fractionation systems is the use of a heat pump. Heat pumping usually employs an external working fluid as shown in Fig. 19-48. Compression is used to raise the temperature of the working fluid above that required for the reboiler. The fluid leaving the reboiler is then flashed and used to condense the reflux. The net result is that the heat absorbed in the condenser is used to reboil the column. The main operating cost then becomes the compressor rather than the normal heating and cooling utilities.

An alternative to the basic heat pump is to use the column overhead as the working fluid. This alternative, vapor compression, eliminates the overhead condenser (Fig. 19-49).

It is often difficult to find a working fluid to reboil and condense in a single fractionator. However, often plants have several fractionators with condensers and reboilers at a variety of temperatures. It may be possible to link a condenser and reboiler from separate columns to utilize a heat pump configuration.

Absorption

Absorption is one of the oldest unit operations used in the gas processing industry. Rich gas enters the bottom of the absorber and flows upward contacting the countercurrent lean oil stream. The lean oil preferentially absorbs the heavier components from the gas and is then termed "rich oil". The rich oil is sent to a stripper (or still) where the absorbed components are removed by heating and/or stripping with steam. The lean oil is recycled to the absorber to complete the process loop.

For a given gas, the fraction of each component in the gas that is absorbed by the oil is a function of the equilibrium phase relationship of the components and lean oil, the relative flow rates, and the contact stages. The phase relation is a function of pressure, temperature, and the composition of the lean oil. Nomenclature for an absorber is shown in Fig. 19-50.

As components are absorbed, the temperature of the gas and oil phases will increase due to heat of absorption. The heat released is proportional to the amount of gas absorbed. In many cases, side coolers are used on the absorber to limit the temperature rise and aid in absorption.

Lean oil will have a molecular weight in the 100 to 200 range. For ambient temperature absorbers, a heavy lean oil of 180 to 200 molecular weight will normally be used. For refrigerated absorbers, a lighter lean oil of 120 to 140 molecular weight is used. A lower molecular weight lean oil will contain more moles per gallon resulting in a lower circulation rate. However, lower molecular weight lean oil will have higher vaporization losses.

The stripping column is operated at low pressure and high temperatures. In older plants, "live" steam is injected into the bottom of the column to strip the NGL components. The steam lowers the partial pressure of the light hydrocarbons which is equivalent to lowering the effective operating pressure.

Refrigerated lean oil plants normally use direct fired heaters to vaporize a portion of the rich oil in the stripper (still) to provide the necessary stripping vapor.

ABSORBER CALCULATIONS

Absorber and stripper calculations, like fractionation column calculations, can be accomplished with tray-by-tray computer models. However, hand calculations can be performed to estimate the absorption of components in a lean oil absorber. The stripping operation is essentially the reverse of absorption and can be handled in a similar fashion.

Many attempts have been made to define an "average" absorption factor method to short-cut the time consuming rigorous calculation procedures. The sole restriction of such a method is how well the average factor, as it is defined, will represent the absorption that actually occurs. One of the simplest definitions of an average absorption factor was by Kremser and Brown.[23, 24] They defined it as:

$$A = L_o/(K_{avg}V_{n+1}) \qquad \textbf{Eq 19-28}$$

$$\text{or} \quad L_o = A\,(K_{avg})\,(V_{n+1}) \qquad \textbf{Eq 19-29}$$

Using an average absorption factor, the extraction of any component from a rich gas can be described by:

$$\frac{Y_{n+1} - Y_1}{Y_{n+1} - Y_o} = \frac{A^{n+1} - A}{A^{n+1} - 1} = E_a \qquad \textbf{Eq 19-30}$$

Fig. 19-48 provides a graphical solution of Eq 19-30.

FIG. 19-47

Example Side Heater

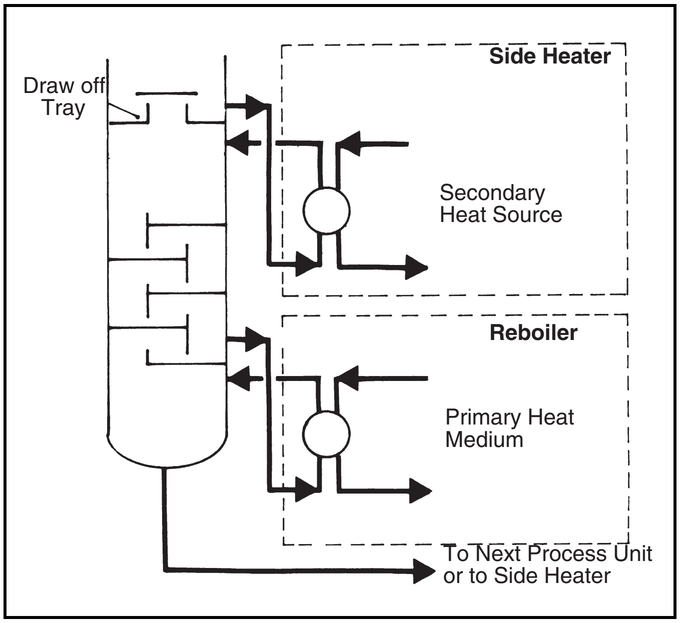

FIG. 19-48

Heat Pumping

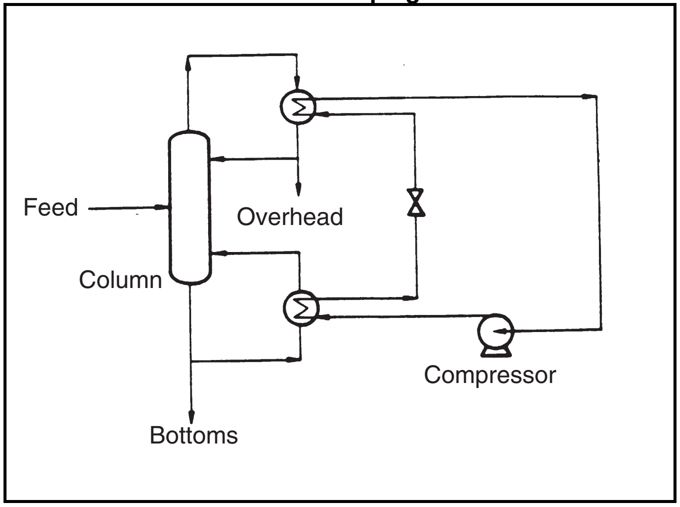

FIG. 19-49

Vapor Recompression

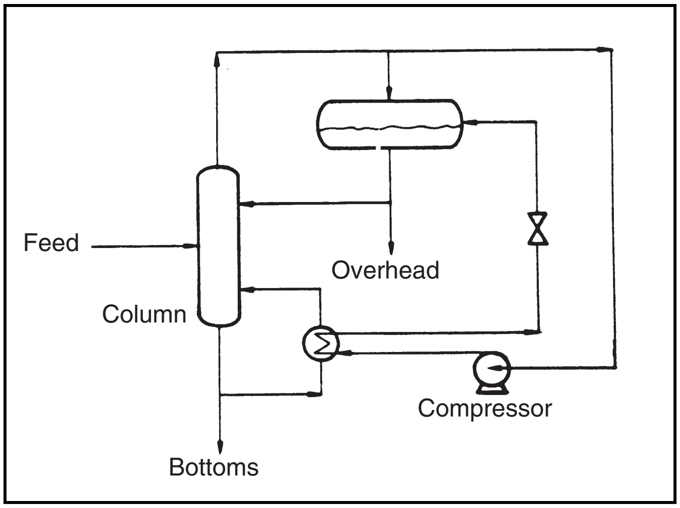

FIG. 19-50

Absorption Nomenclature

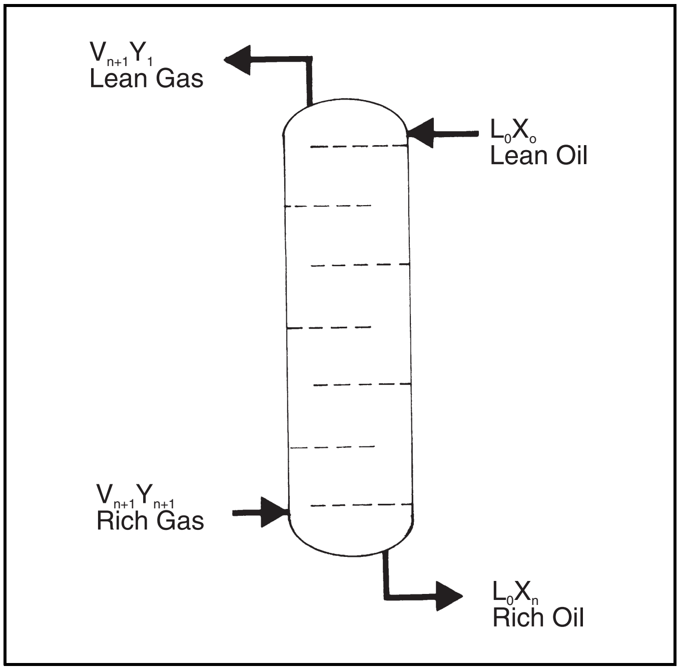

Example 19-7 — Oil absorption is to be used to recover 75 percent of the propane from 100 moles of the rich gas stream shown below. The absorber is to have six theoretical plates. What oil circulation rate is to be used if the average temperature and pressure of the absorber are 104°F and 1,000 psig? The entering lean oil is assumed to be completely stripped or denuded of rich gas components. What will be the composition of the residue gas leaving the absorber?

Solution Steps

Using the equilibrium ratio charts (Section 25), obtain the K-value for each component at 104°F and 1,000 psig.

From Fig. 19-51 at $E_a = 0.75$, $A = 0.80$

Using Eq 19-29:

$$L_o = (0.8)(0.37)(100) = 29.6 \text{ moles/hr}$$

(based on 100 moles of gas)

Using Eq 19-28, the oil rate calculated and the component K-values determine the absorption factor "A" for the remaining components.

For example, for methane:

$$A = \frac{29.6}{3.25\,(100)} = 0.091$$

Using the absorption-factor values read values of E_a for each component (Fig. 19-51).

Solve Eq. 19-30 for each component to determine the moles of components in the residue gas, Y_1.

For example, for methane:

$$\frac{Y_{n+1} - Y_2}{Y_{n+1} - Y_o} = \frac{90.6 - Y_1}{90.6 - 0} = 0.091$$

$$Y_1 = 82.36$$

Note: For this example, $Y_o = 0$ since entering lean oil is assumed completely stripped of rich gas components. This assumption will not be true for all cases.

Calculate the moles of each component in the rich oil. For example, for methane:

$$l = Y_{n+1} - Y_1 + Y_o = 90.6 - 82.36 + 0 = 8.24$$

Comp	Mol %	K	A	E_a	Y_1	l
C_1	90.6	3.25	0.091	0.091	82.36	8.24
C_2	4.3	0.9	0.329	0.329	2.89	1.41
C_3	3.2	0.37	0.80	0.75	0.80	2.40
iC_4	0.5	0.21	1.41	0.96	0.02	0.48
nC_4	1.0	0.17	1.74	0.985	0.015	0.985
C_6	0.4	0.035	8.46	1.0	0.0	0.40
Total	100.0				86.085	13.915

The use of an average absorption factor, as defined in Eq 19-28, ignores the change in gas volume from inlet to outlet. Also, the assumptions of average temperature and K-values can cause significant errors in the preceding calculation method.

Fig. 19-51 can also be used to determine the trays required for a given lean oil rate or to calculate recoveries with a given oil rate and tray count. Fig. 19-51 shows that oil rate declines with increasing number of trays and that beyond about eight theoretical trays little increase in efficiency is achieved.

Since higher oil rates require more energy for heating, cooling, and pumping, the optimum design is usually one that uses the minimum possible oil rate with a reasonable size absorber.

The lowest molecular weight lean oil should be used. This will be fixed by oil vapor pressure and absorber operating temperature. Most problems in absorber operation center around oil quality and rates. Proper stripping of the oil is necessary to minimize lean oil losses to the gas and to maximize absorption capacity.

STRIPPER CALCULATIONS

In a calculation sense, a stripper is simply an upside-down absorber. For hand calculations, a stripping factor is defined as

$$S_T = \frac{KV}{L} \qquad \textbf{Eq 19-31}$$

then:

$$\frac{X_{m+1} - X_1}{X_{m+1} - Y_o} = \frac{S_T^{m+1} - S_T}{S_T^{m+1} - 1} = E_s \qquad \textbf{Eq 19-32}$$

Fig. 19-51 can be used to perform stripper calculations in a similar manner to absorber calculations.

SOUR WATER STRIPPERS

Sour water is a term used for water containing dissolved hydrogen sulfide. Facilities for processing sour gas may have several sources of sour water. These include water from inlet separators, water from compressor discharge scrubbers, quench water from certain Claus unit tail-gas cleanup processes, and water from the regeneration of solid bed product treaters or dehydrators. In some plants it is possible to dispose of this water by using it for makeup to the gas treating solution. However, most sour gas plants have an excess of water and the hydrogen sulfide must be removed to a level of 1 to 2 ppmw before disposing of the water. Sour water strippers are used for this purpose.

Sour water strippers commonly have 10 to 15 trays or 20 to 30 feet of packing. The feed enters at the top and heat is supplied either by a reboiler or by steam injection directly below the bottom tray. Typical operating conditions are:

Pressure, psig	10 - 15
Feed Temperature, °F	200 - 230
Bottom Temperature, °F	240 - 250
Reboil Heat, Btu/gal.	1000 - 2000
Residual H_2S, ppmw	0.5 - 2.0

Overhead vapors from sour water strippers contain hydrogen sulfide, steam, trace amounts of hydrocarbons and, in some plants, carbon dioxide. These vapors are usually sent to the regenerator (still) condenser in plants using aqueous treating solutions. Alternatively, the vapors may be sent directly to the sulfur recovery unit, or incinerated if emission standards are not exceeded.

Foaming occurs in sour water strippers and the tower diameter should be based on operation at 50 to 70 percent of the flooding loads for a non-foaming system.[25]

The required number of theoretical trays and stripping vapor quantity can be calculated as shown in the following example. However, the results of such calculations must be used only as a guide to the relative effects of changing vapor rates

FIG. 19-51

Absorption and Stripping Factor Correlation

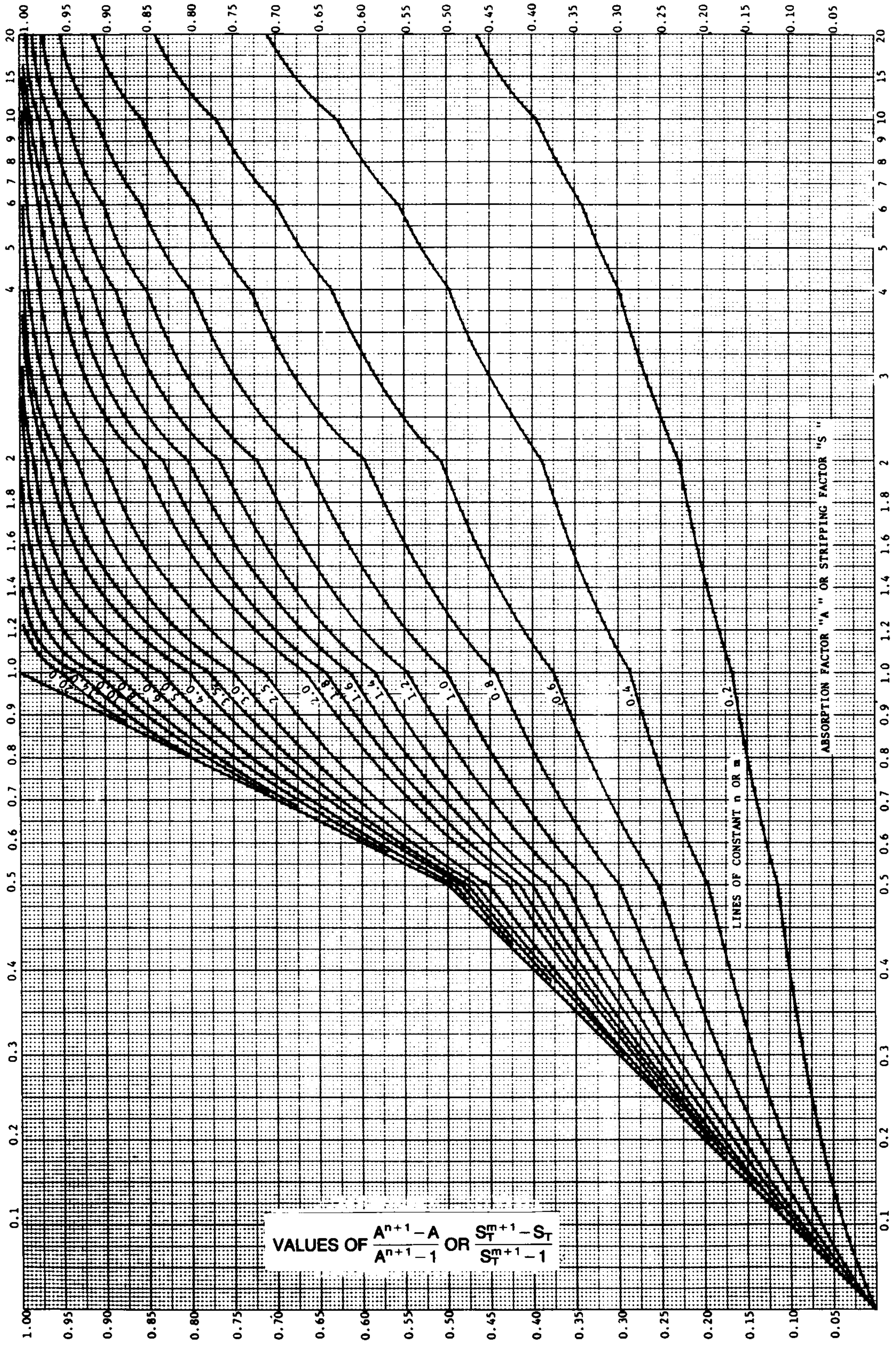

and trays. This is because tray efficiencies or packing HETPs are not known accurately and the effects of other components in the sour water change the apparent solubility of hydrogen sulfide. Ammonia, which is common in refinery sour waters, can increase the hydrogen sulfide solubility by a factor of 10 or more. A more detailed design procedure is then required for refining sour water strippers than that given in the following example.[26]

Example 19-8 — Sour water containing 2500 ppmw of hydrogen sulfide is to be stripped to 1.5 ppmw. Enough indirect reboiler heat is provided to allow 0.75 pounds of steam to leave the top tray for each gallon of feed. The feed rate is 10 gpm and the tower top is to operate at 21.0 psia. Determine the number of theoretical trays required.

Set desired overall material balance:

Feed = 10 gpm (8.33 lb/gal) (60 min/hr) = 5000 lb/hr

Overhead steam = 10 (60) 0.75 = 450 lb/hr

	Feed lb/hr	Bottoms lb/hr	Overhead lb/hr
H_2S	12.50	0.007	12.493
Water	4987.50	4537.500	450.000
	5000.00	4537.507	462.493

Required fraction of H_2S to be stripped:

12.493/12.50 = 0.99944

Estimate top temperature:

Fraction water vapor in overhead

450/462.493 = 0.973

Partial pressure water in overhead

0.973 (21) = 20.4 psia

Temperature (from steam table, Fig. 24-37)
at 20.4 psia = 229°F

Estimate the K-value for H_2S at top conditions:

K = Henry's Constant/Total pressure

Henry's Constant for H_2S at 229°F = 2.05 (10^4) psia (Fig. 19-52)

$$K = 2.05\,(10^4)/21.0 = 976.2$$

V = mols vapor leaving top tray

$$= \frac{12.493}{34} + \frac{450}{18} = 25.37$$

L = mols liquid to top tray

$$= \frac{12.5}{34} + \frac{4987.5}{18} = 277.5$$

Use Eq 19-31 to calculate fraction H_2S stripped:

$$S_T = \frac{(976)\,(25.37)}{277.5} = 89.2$$

$$E_s = \frac{S_T^{(m+1)} - S_T}{S_T^{(m+1)} - 1}$$

Assume various values for "m" and calculate "E_s":

Results are:

m	E_s
1	0.98891
2	0.99988
3	0.99999

Two theoretical trays would be required for the stated conditions. Since tray efficiencies or packing HETPs are not predictable, 10 actual trays or 20 feet of packing would be used.

The relative effect of various operating pressures and reboiler heat rates can be estimated by the above method.

FIG. 19-52

Henry's Constants for H_2S in Water

Temp, °F	H (H_2S), psia
100	1.10 (10^4)
200	1.82 (10^4)
300	2.6 (10^4)

REFERENCES

1. Chien, H. H. Y., "A Rigorous Method for Calculating Minimum Reflux Rates in Distillation", AIChE Jour. 24, July, 1978.
2. Chien, H. H. Y., "A Rigorous Calculation Method for the Minimum Stages in Multicomponent Distillation", Chem. Eng. Sci. 28, 1967-74, 1973.
3. Fenske, M. R., "Fractionation of Straight-Run Pennsylvania Gasoline", Ind. Eng. Chem. 24, 482-5, 1932.
4. Winn, F. W., "New Relative Volatility Method for Distillation Calculations", Pet. Refiner. 37(5), 216-218, 1958.
5. Underwood, A. J. V., "Fractional Distillation of Multicomponent Mixtures", Chem. Eng. Prog. 44, 603-14, 1948.
6. Erbar, J. H., and Maddox, R. N., "Latest Score: Reflux vs. Trays", Petr. Refiner 40(5), 183-188, 1961.
7. Fair, J. R., and Bolles, W. L., "Modern Design of Distillation Columns", Chem. Engr. 75(9), 156-178, April 22, 1968.
8. Katz, D. L., et al., "Handbook of Natural Gas Engineering", McGraw-Hill, 1959.
9. Koch Engineering Co., "Flexitray Design Manual", 1982.
10. Glitsch, Inc., "Ballast Tray Design Manual", Third Edition.
11. Nutter Engineering, "Float Valve Design Manual", Aug., 1981.
12. AIChE, "Bubble-Tray Design Manual", New York, 1958.
13. Smith, B. D., "Design of Equilibrium Stage Processes", McGraw-Hill, 1963.
14. Vital, T. J., et al., "Estimating Separation Efficiency", Hyd. Proc. 63, 147-153 Nov., 1984.
15. O'Connell, H. E., "Plate Efficiency of Fractionating Columns and Absorbers", Trans. AIChE 42, 741-755, 1946.
16. Eckert, J. S., "Selecting the Proper Distillation Column Packing", Chem. Eng. Prog. 66(3), 39, 1970.
17. Vital, T. J., et al., "Estimating Separation Efficiency", Hyd. Proc. 63, 75-78 Dec., 1984.
18. Eckert, J. S., "Tower Packings . . . Comparative Performance", Chem. Eng. Prog. 59(5), 76-82, 1963.

19. Kern, D. Q., "Process Heat Transfer", McGraw-Hill, p. 453-491, 1950.
20. Fair, J. R., "What You Need to Design Thermosiphon Reboilers", Petr. Refin. 39(2), 105-123, 1960.
21. Kister, H. Z., "C. E. Refresher: Column Internals", Chem, Engr., May 19, 1980, p. 138-142; July 28, 1980, p. 79-83; Sept. 8, 1980, p. 119-123; Nov. 17, 1980, p. 283-285; Dec. 29, 1980, p. 55-60; Feb. 9, 1981, p. 107-109; Apr. 6, 1981, p. 97-100.
22. Jamison, R. H., "Internal Design Techniques", Chem, Eng. Prog. 65(3), 46-51, 1969.
23. Kremser, A., "Theoretical Analysis of Absorption Process", National Petro. News, 22(21), 48, 1930.
24. Brown, G. G., and Souders, M., "Fundamental Design of Absorbing and Stripping Columns for Complex Vapors", Ind. Eng. Chem. 24, 519, 1932.
25. Walker, G. J., "Design Sour Water Strippers Quickly", Hyd. Proc., June 1969, pp. 121-124.
26. Beychok, M. R., "Aqueous Wastes from Petroleum and Petrochemical Plants", John Wiley & Sons, Ltd., 1967.
27. Gillespie, P. C., and Wilson, G. M., "Vapor-Liquid and Liquid-Liquid Equilibria", GPA-RR-48, 1982.
28. Van Winkle, M., "Distillation", McGraw-Hill, p. 480-645, 1967.
29. Chen, G. K., "Packed Column Internals", Chem. Engr., March 5, 1984, p. 40-51.
30. Campbell, J. M., "Gas Conditioning and Processing Vol. 2", Campbell Petroleum Series, p. 4, 1978.
31. Kister, Henry, "Distillation Design," McGraw-Hill, Chapter 9, 1992.

NOTES:

SECTION 20

Dehydration

Natural gas and associated condensate are often produced from the reservoir saturated (in equilibrium) with water. In addition, the gas and condensate often contain CO_2 and H_2S which might require removal. This is frequently accomplished with aqueous solutions such as amines, potassium carbonate, etc. which saturate the gas or condensate with water. Liquid hydrocarbons may also contain water downstream of product treaters or upon removal from underground storage.

Dehydration is the process used to remove water from natural gas and natural gas liquids (NGLs), and is required to:

- prevent formation of hydrates and condensation of free water in processing and transportation facilities,
- meet a water content specification, and
- prevent corrosion

FIG. 20-1

Nomenclature

A = area, ft^2
B = constant in Equation 20-11
C = constant in Equation 20-11
C_p = heat capacity, Btu/(lb • °F)
C_g = gravity correction factor for water content
C_s = salinity correction factor for water content
C_{ss} = saturation correction factor for sieve
C_T = temperature correction factor
D = diameter, ft
d = depression of the water dewpoint or the gas hydrate freezing point, °F
EOS = Equation of State
F_s = sizing parameter for packed towers, $\sqrt{lb / (ft \cdot sec)}$
G = mass velocity, lb /(ft^2 • hr)
H = enthalpy, BTU/lb
ΔH = latent heat of vaporization, Btu/lb
K_{vs} = vapor/solid equilibrium K-value
L = length of packed bed, ft
L_g = glycol flow rate, U.S. gal./hr
L_{MTZ} = length of packed bed mass transfer zone, ft
L_s = length of packed bed saturation zone, ft
$\dot{m}$ = mass flow rate, lb/hr
MTZ = mass transfer zone
MW = molecular weight
MW_I = molecular weight of inhibitor0
N = number of theoretical stages
P = pressure, psia
ΔP = pressure drop, psi
q = actual gas flow rate, ft^3/min
Q = heat duty, Btu/hr
Q_c = reflux condensing heat duty, Btu/gal.
Q_{hl} = regeneration heat loss duty, Btu
Q_r = total regeneration heat duty, Btu/gal.
Q_s = sensible heat, Btu/gal.
Q_{si} = duty required to heat mole sieve to regeneration temperature, Btu
Q_{st} = duty required to heat vessel and piping to regeneration temperature, Btu
Q_{tr} = total regeneration heat duty, Btu
Q_v = vaporization of water heat duty, Btu/gal.
Q_w = desorption of water heat duty, Btu
S_s = amount molecular sieve req'd in saturation zone, lb
t = thickness of the vessel wall, in.
T = temperature, °F
T_{rg} = regeneration temperature, °F
v = vapor velocity, ft/sec
V = superficial vapor velocity, ft/min
$\dot{w}$ = water rate, lb/hr
W = water content of gas, lb/MMscf
W_{bbl} = water content of gas, bbl/MMSCF
W_r = water removed per cycle, lb
x = mole fraction in the liquid phase
X = mass fraction in the liquid phase
y = mole fraction in the gas phase
z = compressibility factor
γ = specific gravity
μ = viscosity, cp
ρ = density, lb/ft^3

Subscripts

i = inlet
o = outlet
l = liquid
v = vapor
t = total
CO_2 = carbon dioxide
H_2S = hydrogen sulfide
HC = hydrocarbon
s = solid phase
L = lean inhibitor
R = rich inhibitor
I = inhibitor
H_2O = water
H = hydrate
rg = regeneration
f = feed
p = permeate

Techniques for dehydrating natural gas, associated gas condensate and NGLs include:

- Absorption using liquid desiccants,
- Adsorption using solid desiccants,
- Dehydration with $CaCl_2$,
- Dehydration by refrigeration,
- Dehydration by membrane permeation,
- Dehydration by gas stripping, and
- Dehydration by distillation

WATER CONTENT OF GASES AND LIQUIDS

Water Solubility in Liquid Hydrocarbons

Fig. 20-2 shows the solubilities of water in sweet liquid hydrocarbons. It is based on experimental data developed in GPA RR 169.[49] In sour hydrocarbon liquids, water solubility can be substantially higher.

GPA RR-62[1] provides water solubility data for selected hydrocarbons in both sweet and sour systems. Equations-of-State (EOS) may be used to estimate water solubilities in hydrocarbon systems. GPA RR-42[2] provides a comparison of experimental versus calculated values using a modified Soave-Redlich-Kwong (SRK) EOS. Results from EOS methods should be used with caution and verified with experimental data when possible.

Fig. 20-3 gives hydrocarbon solubilities in water, which in general are considerably less than water in hydrocarbons. This figure is based on experimental data developed in GPA RR 169.[49] Some experimental data is available in GPA RR-62. Yaws, *et. al.*[3] provide a general correlation which may be used to estimate the solubility of over 200 hydrocarbons in water.

Water Content of Natural Gases

The saturated water content of a gas depends on pressure, temperature, and composition. The effect of composition increases with pressure and is particularly important if the gas contains CO_2 and/or H_2S. For lean, sweet natural gases containing over 70% methane and small amounts of heavy hydrocarbons, generalized pressure-temperature correlations are suitable for many applications. Fig. 20-4[4] is an example of one such correlation which has been widely used for many years in the design of "sweet" natural gas dehydrators. It was first published in 1958 and was based on experimental data available at that time. The gas gravity correlation should never be used to account for the presence of H_2S and CO_2 and may not always be adequate for certain hydrocarbon effects, especially for the prediction of water content at pressures above 1500 psia. The hydrate formation line is approximate and should not be used to predict hydrate formation conditions.

Fig. 20-5 extends Fig. 20-4 from 300 to 400°F. This is based on data in the high-temperature region published by Olds et. al.[50]

The following examples are provided to illustrate the use of Figs. 20-4 and 20-5:

Example 20-1 — Determine the saturated water content for a sweet lean hydrocarbon gas at 150°F and 1,000 psia.

From Fig. 20-4 or Fig. 20-5

$$W = 220 \text{ lb/MMscf}$$

For a 26 molecular weight gas,

$$C_g = 0.98 \qquad \text{(Fig. 20-4)}$$

$$W = (0.98)(220) = 216 \text{ lb/MMscf}$$

For a gas in equilibrium with a 3% brine,

$$C_s = 0.93 \qquad \text{(Fig. 20-4)}$$

$$W = (0.93)(220) = 205 \text{ lb/MMscf}$$

Water Content of High CO_2/H_2S Gases

Both H_2S and CO_2 contain more water at saturation than methane or sweet natural gas mixtures. The relative amounts vary considerably with temperature and pressure. Fig. 20-6[7] and 20-7[6] display saturated water content of pure CO_2 and H_2S, respectively, at various temperatures and pressures. Fig. 20-8 shows the saturated water contents of pure CH_4, CO_2 and selected mixtures vs. pressure at 100°F. Fig. 20-9[5] exhibits the saturated water content of pure CH_4, CO_2 and a 95% CO_2 – 5% CH_4 mixture vs. pressure at 100°F. Several significant observations can be made from these figures and other available data.

1. Saturated water content of pure CO_2 and H_2S can be significantly higher than that of sweet natural gas, particularly at pressures above about 700 psia at ambient temperatures.
2. Corrections for H_2S and CO_2 should be applied when the gas mixture contains more than 5% H_2S and/or CO_2 at pressures above 700 psia. These corrections become increasingly significant at higher concentrations and higher pressures.
3. The addition of small amounts of CH_4 or N_2 to CO_2 or H_2S can dramatically reduce the saturated water content compared to the pure acid gas.

Acid gas water content is a very complex subject. The data and methods presented here should not be used for final design. Fig. 20-6, 20-7, 20-8 and 20-9 are all based on experimental data. A cursory study of these figures reveals the complexities involved. An accurate determination of water content requires a careful study of the existing literature and available experimental data. In most cases additional experimental data is the best way to verify predicted values. Even the most sophisticated EOS techniques may give results of questionable reliability.

Below 40% acid gas components, one method of estimating the water content uses Eq 20-1 and Fig. 20-4, 20-10, and 20-11.[8]

$$W = y_{HC} W_{HC} + y_{CO_2} W_{CO_2} + y_{H_2S} W_{H_2S} \qquad \textbf{Eq 20-1}$$

Note that Fig. 20-10 and 20-11 provide values for what is termed the "effective" water content of CO_2 and H_2S in natural gas mixtures for use only in Eq 20-1. These are not pure CO_2 and H_2S water contents.

Another method for estimation of the saturated water content of acid gas mixtures up to 10,000 psia uses Fig. 20-12, 20-13, and 20-14.[9] With gases containing CO_2, the CO_2 must be converted to an "equivalent" H_2S concentration. For purposes of this method, it is assumed the CO_2 will contribute 75% as much water to the gas mixture, on a molar basis, as H_2S.

Water contents for pressures in between the values in the figures (for example at pressure P_{bbl} between pressures P_{bbl1} and P_{bbl2}) can be determined by plotting on log-log paper or by logarithmic interpolation using the following equation:

$$\log(W_{bbl}) = \log(W_{bbl1}) + (\log(W_{bbl2}/W_{bbl1})) \bullet (\log(P_{bbl}/P_{bbl1})) / (\log(P_{bbl2}/P_{bbl1}) \qquad \textbf{Eq 20-2}$$

A third method is Fig. 20-15.[51] The CO_2 is converted to equivalent H_2S as for the second method, but the factor is 70% instead of 75%.

Example 20-2 — Determine the saturated water content of an 80% C_1, 20% CO_2 mixture at 160 °F and 2000 psia. The experimentally determined water content was 172 lb/MMscf.

Method One

$$W_{HC} = 167 \text{ lb/MMscf} \qquad \text{(Fig. 20-4)}$$

$$W_{CO_2} = 240 \text{ lb/MMscf} \qquad \text{(Fig. 20-11)}$$

$$W = (0.80)(167) + (0.20)(240)$$

$$= 182 \text{ lb/MMscf}$$

Method Two

First the composition must be converted for use with Fig. 20-12.

$$y_{H_2S}\text{ (pseudo)} = (0.75)(y_{CO_2}) = (0.75)(0.20) = 0.15$$

$$W = 0.49 \text{ bbl/MMscf} \qquad \text{(Fig. 20-12)}$$

$$\text{Density of water} = 350 \text{ lb/bbl}$$

$$= (0.49)(350) = 172 \text{ lb/MMscf}$$

FIG. 20-2

Solubility of Water in Liquid Hydrocarbons

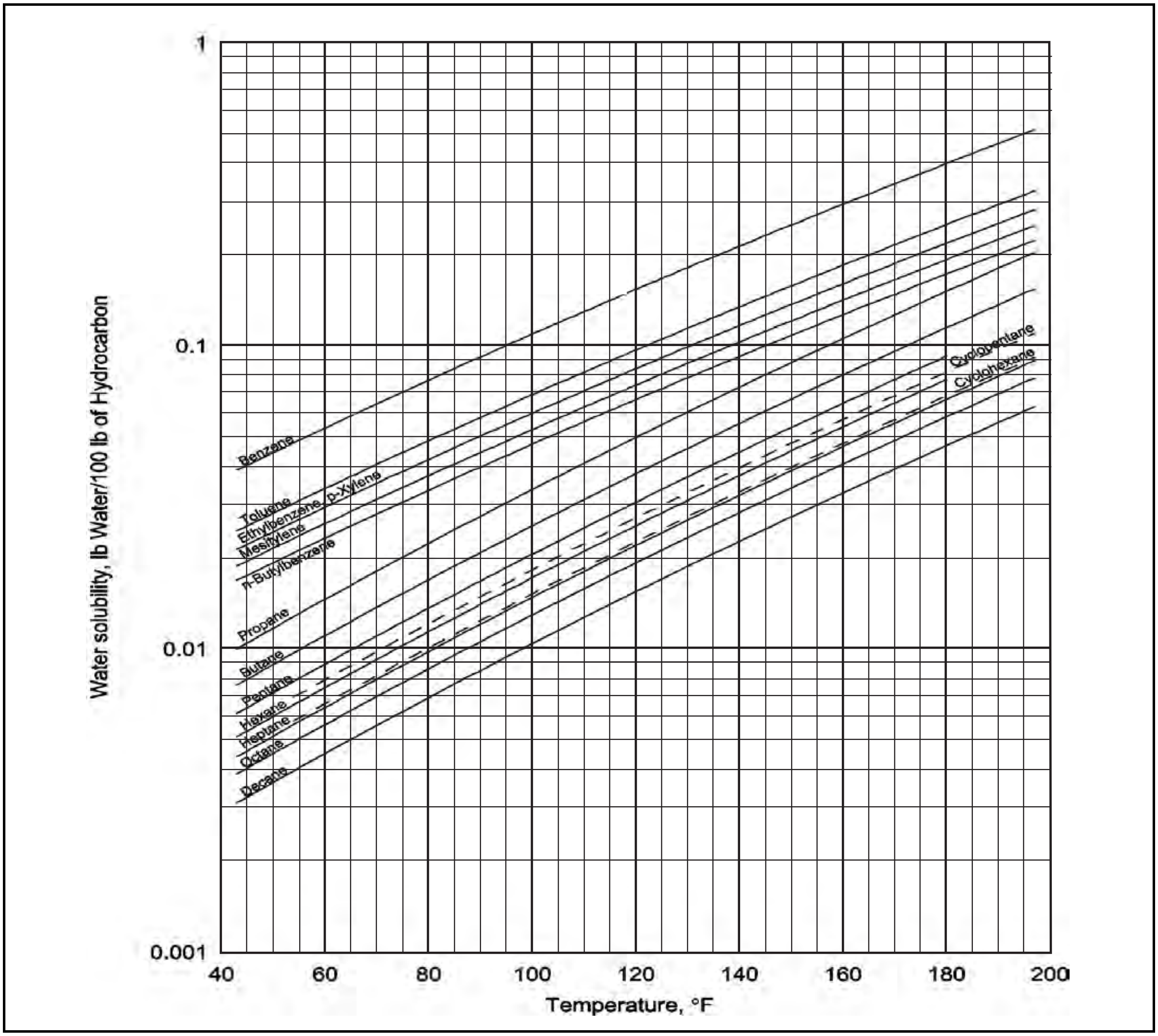

Method Three

First the composition must be converted for use with Fig. 20-15.

$$y_{H_2S}\,(\text{pseudo}) = 0.70\,(y_{CO_2}) = 0.70(0.20) = 0.14$$

Enter the left side of Fig. 20-15 at 160°F and move to the % H_2S Equivalent line (14%). Proceed vertically upward to the Pressure, psia line (2000 psia), and move horizontally to the left to Water Content Ratio scale (ratio of 1.16).

$$W = (1.16)(167) = 194 \text{ lb/MMscf}$$

Fig. 20-16 compares the three methods presented for saturated water content determination of high CO_2/H_2S gas mixtures with some of the available experimental data. The last four data points shown in Fig. 20-16 indicate the dangers involved with extrapolation to higher CO_2 or H_2S contents. In one case, the estimated water content agrees within 11% of the experimental value. In another case, the experimental value is over 6 times the estimated water content.

Water Content in the Hydrate Region

Fig. 20-4 is based on the assumption that the condensed water phase is a liquid. However, at temperatures below the hydrate temperature of the gas, the "condensed" phase will be a solid

FIG. 20-3

Solubility of Hydrocarbons in Water

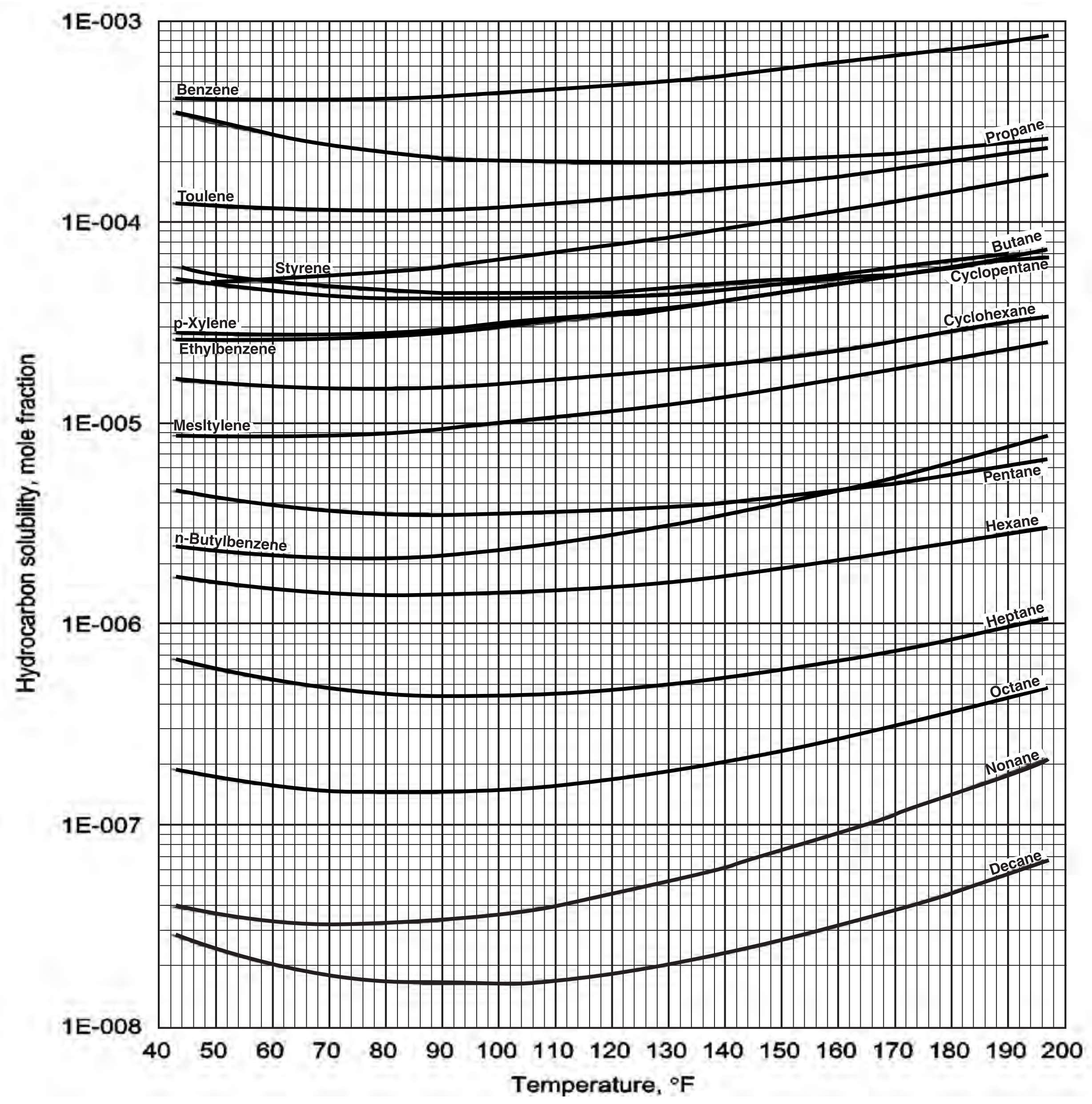

FIG. 20-4

Water Content of Hydrocarbon Gas

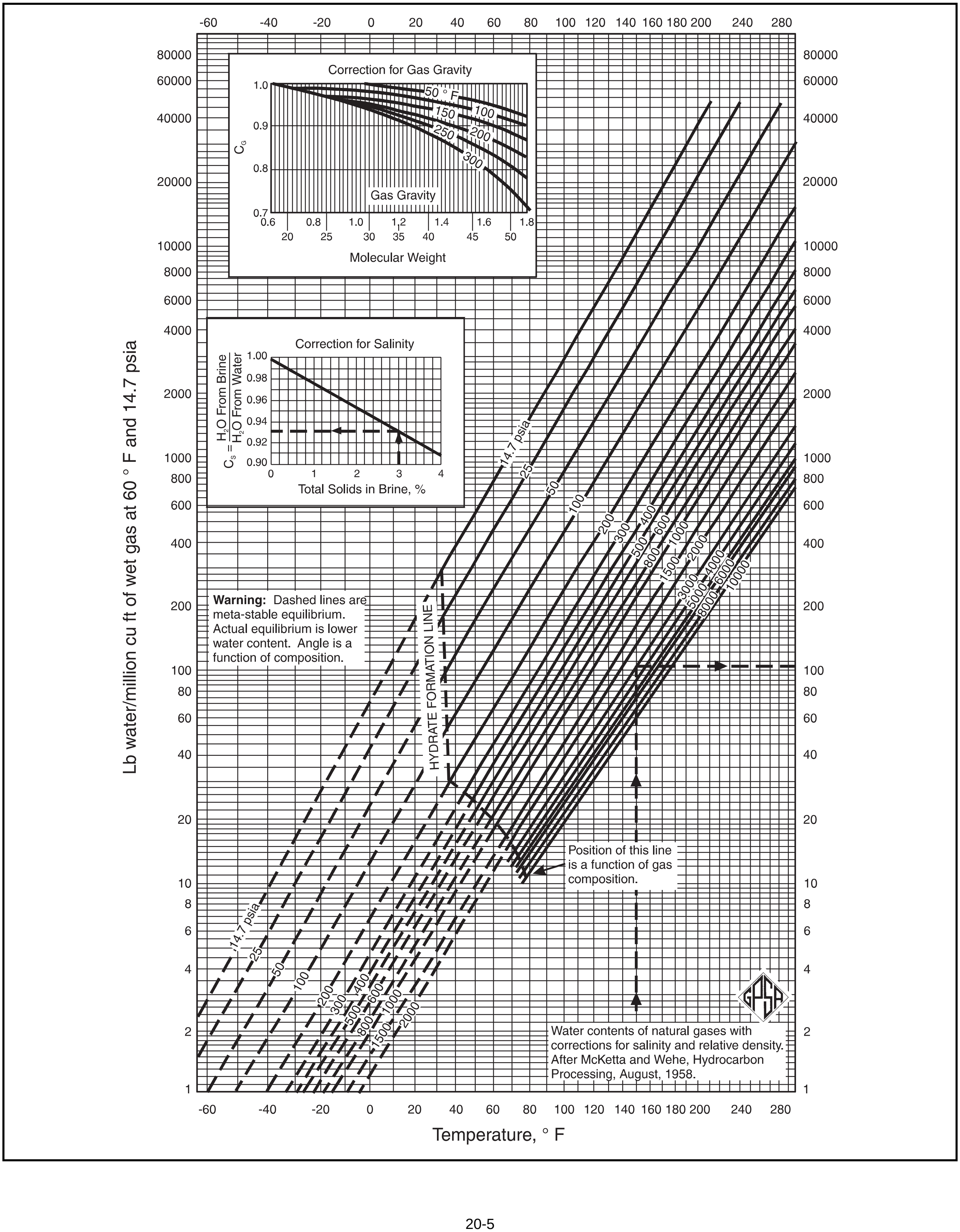

Warning: Dashed lines are meta-stable equilibrium. Actual equilibrium is lower water content. Angle is a function of composition.

Position of this line is a function of gas composition.

Water contents of natural gases with corrections for salinity and relative density. After McKetta and Wehe, Hydrocarbon Processing, August, 1958.

FIG. 20-5

Water Content of Hydrocarbon Gas

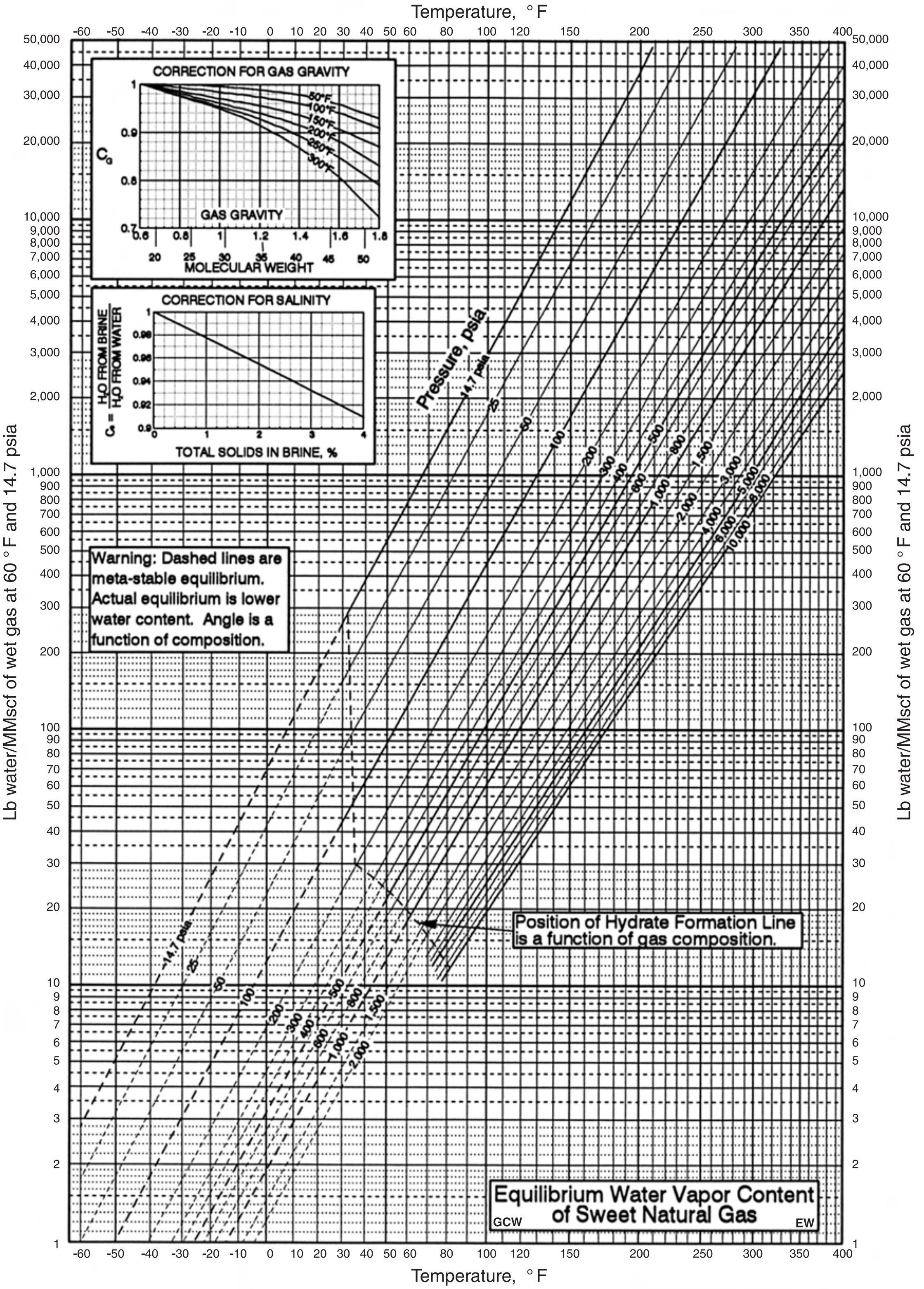

Warning: Dashed lines are meta-stable equilibrium. Actual equilibrium is lower water content. Angle is a function of composition.

Position of Hydrate Formation Line is a function of gas composition.

Compliments of Gordon Wichert, Penn West Petroleum Ltd., with all rights reserved.

FIG. 20-6

Water Content of CO_2

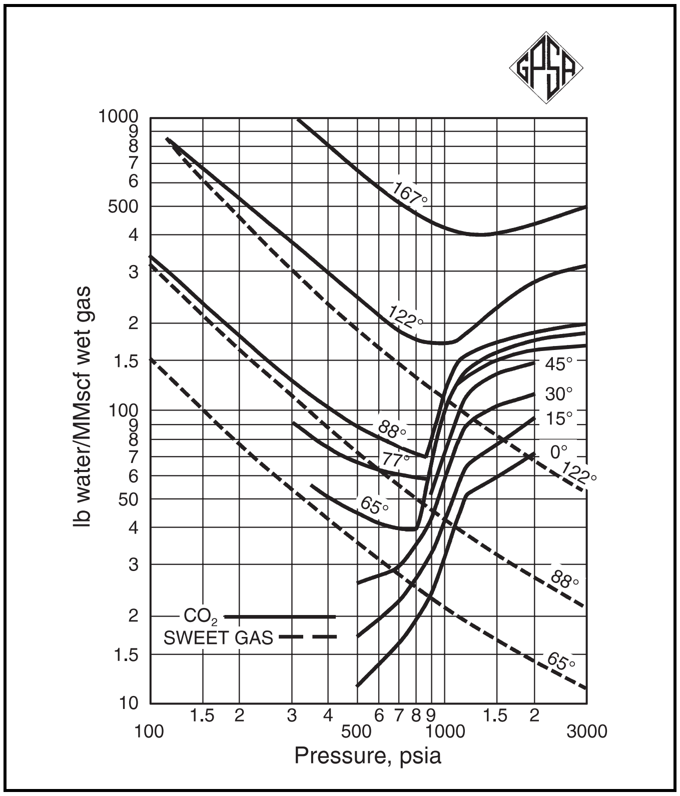

FIG. 20-8

Experimental Values for Water Content of Acid Gases

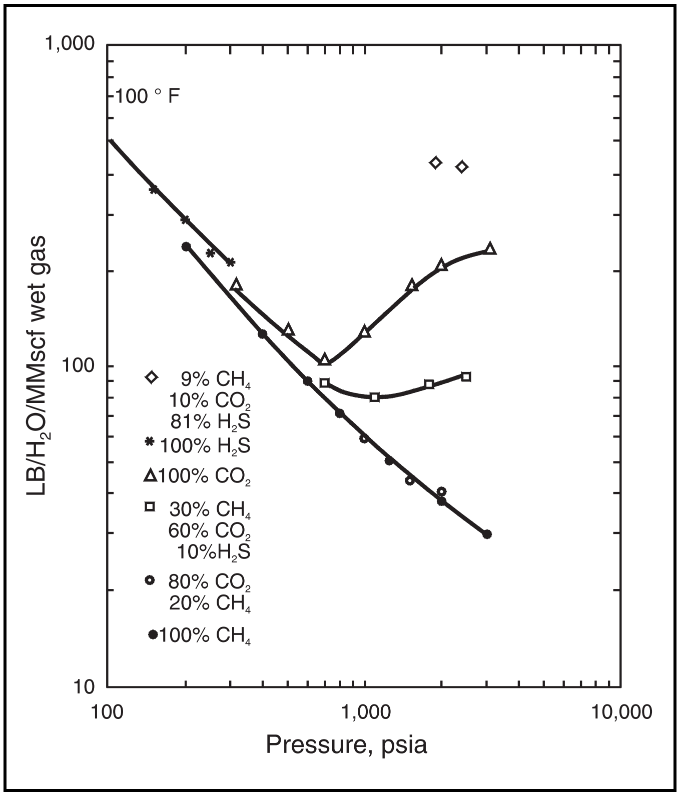

FIG. 20-7

Water Content of Hydrogen Sulfide

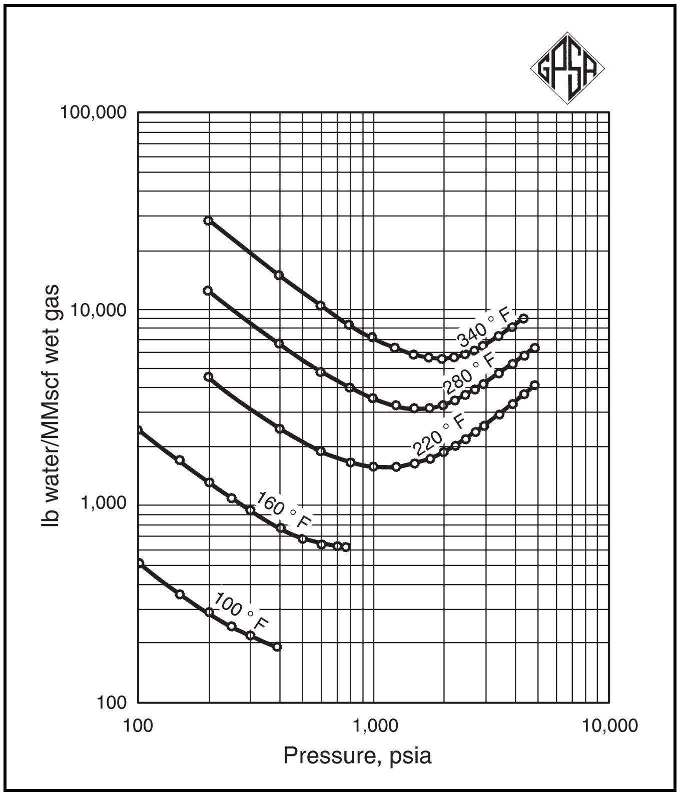

FIG. 20-9

Saturated Water Content of CO_2 - Rich Mixtures at 100°F

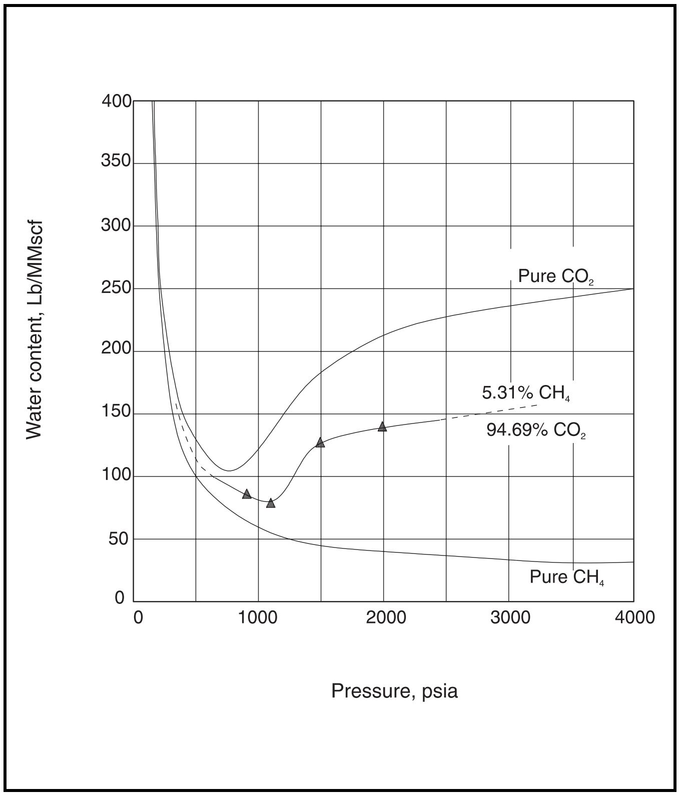

FIG. 20-10

Effective Water Content of H_2S in Natural Gas Mixtures vs. Temperature at Various Pressures

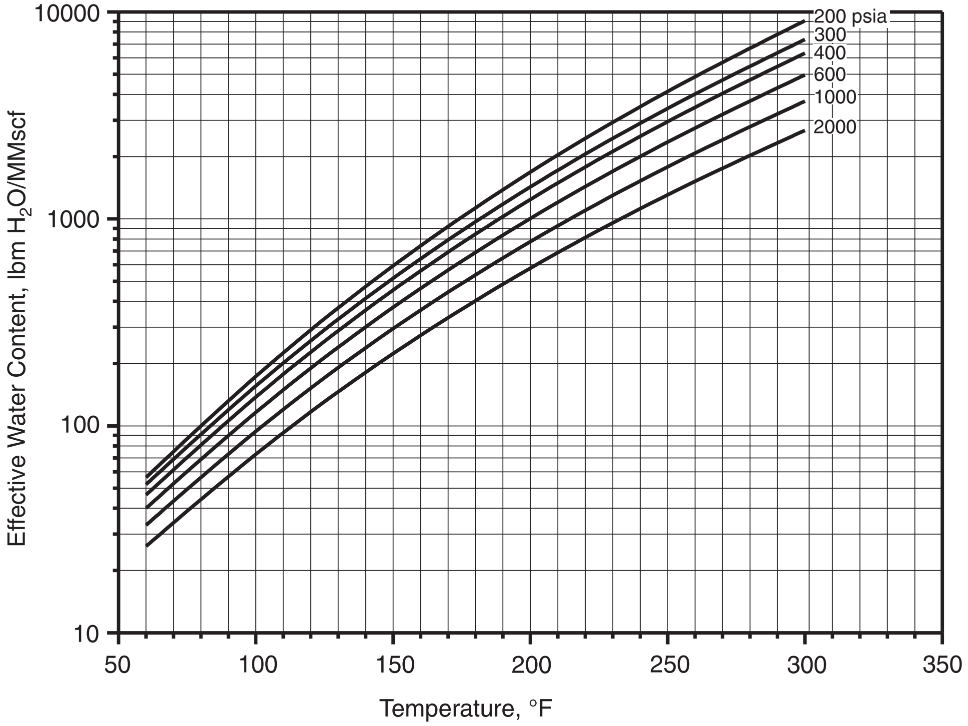

FIG. 20-11

Effective Water Content of CO_2 in Natural Gas Mixtures vs. Temperature at Various Pressures

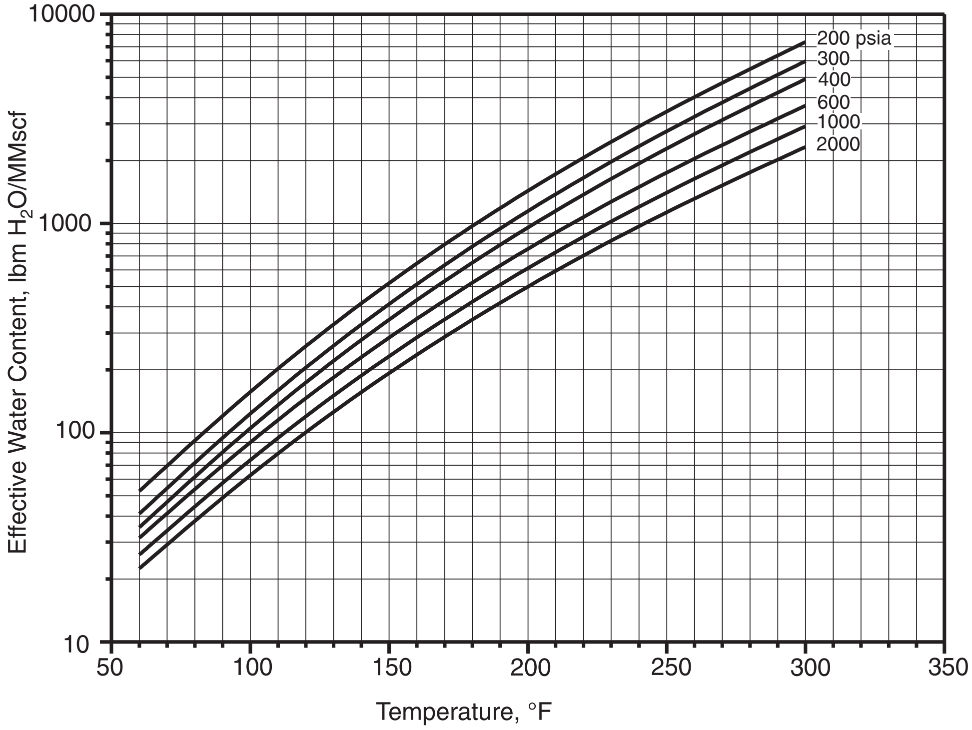

FIG. 20-12

Calculated Water Content of Acid Gas Mixtures to 2000 psia

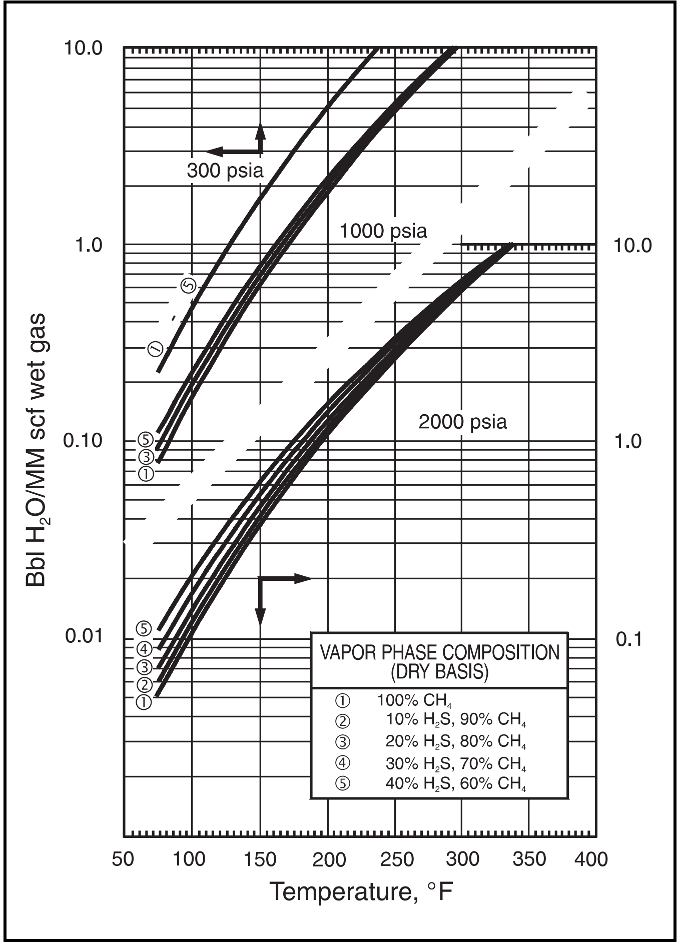

FIG. 20-13

Calculated Water Content of Acid Gas Mixtures to 6000 psia

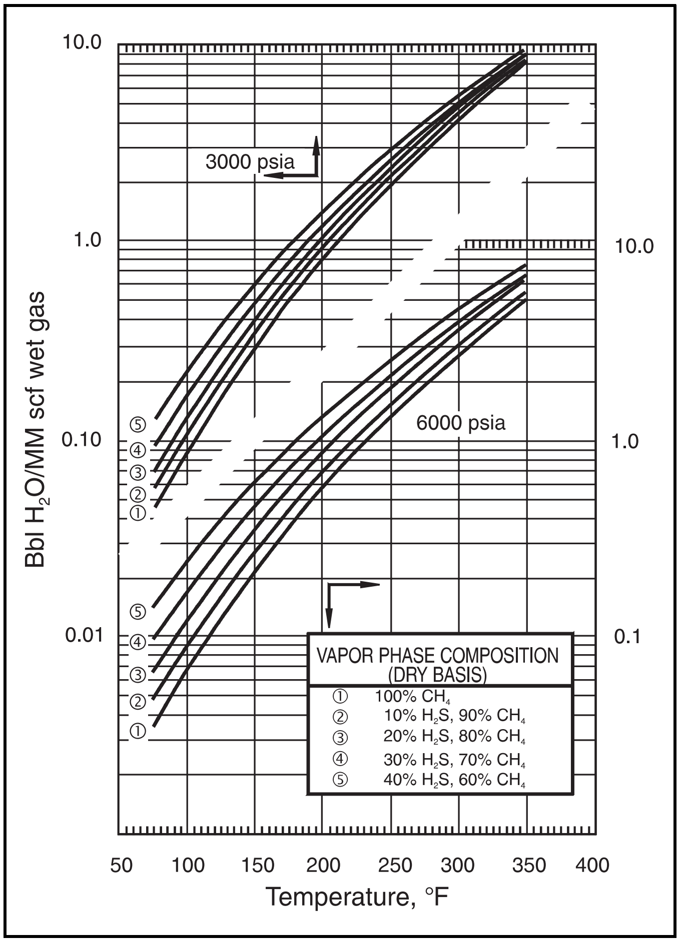

(hydrate). The water content of a gas in equilibrium with a hydrate will be lower than equilibrium with a metastable liquid. This is acknowledged in the "Warning" in Fig. 20-4.

Hydrate formation is a time dependent process. The rate at which hydrate crystals form depends upon several factors including gas composition, presence of crystal nucleation sites in the liquid phase, degree of agitation, etc. During this transient "hydrate formation period" the liquid water present is termed "metastable liquid". Metastable water is liquid water which, at equilibrium, will exist as a hydrate.

GPA RR-45[11], 50[10] and 80[12] present experimental data showing equilibrium water contents of gases above hydrates. Data from RR-50 is presented in Fig. 20-17. For comparative purposes, the metastable water content of a sweet gas from Fig. 20-4 is also shown. Water content of gases in the hydrate region is a strong function of composition. Fig. 20-17 should not be extrapolated to other compositions.

When designing dehydration systems (particularly TEG systems) to meet extremely low water dewpoint specifications, it is necessary to determine the water content of the gas in equilibrium with a hydrate using a correlation like that presented in Fig. 20-17. If a metastable correlation is used, one will overestimate the saturated water content of the gas at the dewpoint specification. This, in turn, may result in a dehydration design which is unable to meet the required water removal. Where experimental data is unavailable, utilization of a sound thermodynamic-based correlation can provide an estimate of water content in equilibrium with hydrates.

Water Content Measurement

Specifications for water content measurement are given in GPA Publication 2140. These include the Valve Freeze Method, the Bureau of Mines Dew Point Tester, and the Cobalt Bromide Method. Cobalt bromide color change occurs at about 25-30 ppmw.

There are several commercial instruments available for monitoring water content based on other principles. Measuring water contents of less than 20 ppmw or making dewpoint determinations at less than –40°F can be very difficult.

HYDRATES IN NATURAL GAS SYSTEMS

A hydrate is a physical combination of water and other small molecules to produce a solid which has an "ice-like" appearance but possesses a different structure than ice. Their formation in gas and/or NGL systems can plug pipelines, equipment, and instruments, restricting or interrupting flow.

There are three recognized crystalline structures for such hydrates. In both, water molecules build the lattice and hydrocarbons, nitrogen, CO_2 and H_2S occupy the cavities. Smaller molecules (CH_4, C_2H_6, CO_2, H_2S) stabilize a body-centered cu-

FIG. 20-14

Calculated Water Content of Acid Gas Mixtures to 10,000 psia

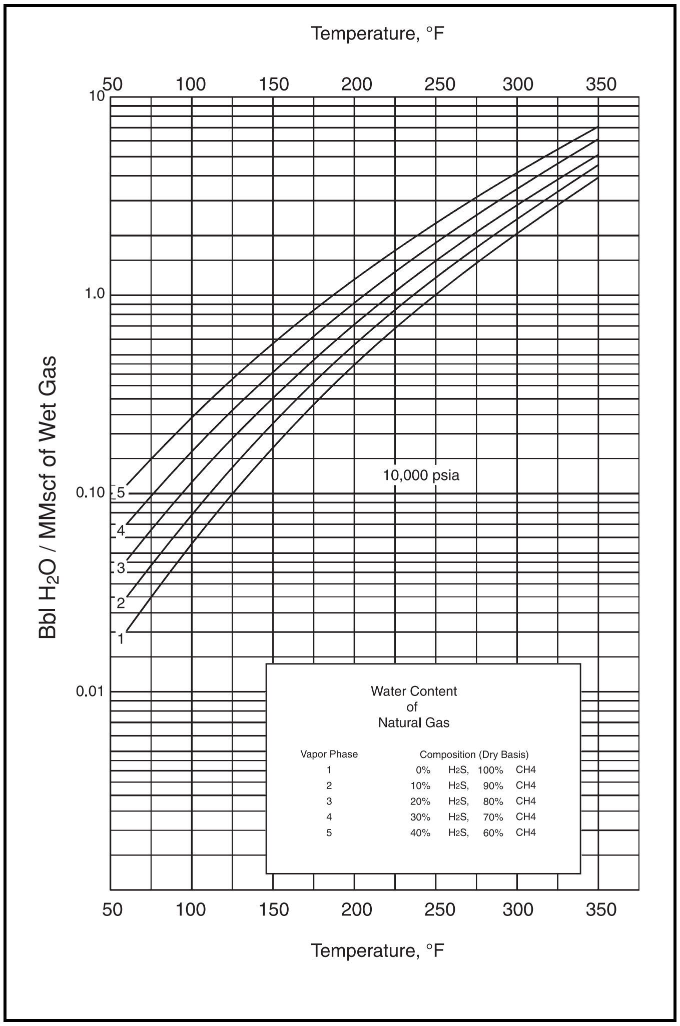

bic called Structure I. Larger molecules (C_3H_8, i-C_4H_{10}, n-C_4H_{10}) form a diamond-lattice called Structure II.

Normal paraffin molecules larger than n-C_4H_{10} do not form Structure I and II hydrates as they are too large to stabilize the lattice. However, some isoparaffins and cycloalkanes larger than pentane are known to form Structure H hydrates.[13]

Gas composition determines structure type. Mixed gases will typically form Structure II. Limiting hydrate numbers (ratio of water molecules to molecules of included gaseous component) are calculated using the size of the gas molecules and the size of the cavities in H_2O lattice.

From a practical viewpoint, the structure type does not affect the appearance, properties, or problems caused by the hydrate. It does, however, have a significant effect on the pressure and temperature at which hydrates form. Structure II hydrates are more stable than Structure I. This is why gases containing C_3H_8 and i-C_4H_{10} will form hydrates at higher temperatures than similar gas mixtures which do not contain these components. The effect of C_3H_8 and i-C_4H_{10} on hydrate formation conditions can be seen in Fig. 20-19. At 1000 psia, a 0.6 sp. gr. gas (composition is shown in Fig. 20-22) has a hydrate formation temperature which is 12-13°F higher than pure methane.

The presence of H_2S in natural gas mixtures results in a substantially warmer hydrate formation temperature at a given pressure. CO_2, in general, has a much smaller impact and often reduces the hydrate formation temperature at fixed pressure for a hydrocarbon gas mixture.

The conditions which affect hydrate formation are:

Primary Considerations

- Gas or liquid must be at or below its water dew point or saturation condition (NOTE: liquid water does not have to be present for hydrates to form)
- Temperature
- Pressure
- Composition

Secondary Considerations

- Mixing
- Kinetics
- Physical site for crystal formation and agglomeration such as a pipe elbow, orifice, thermowell, or line scale
- Salinity

In general, hydrate formation will occur as pressure increases and/or temperature decreases to the formation condition.

Prediction of Sweet Natural Gas Hydrate Conditions

Fig. 20-18, based on experimental data, presents the hydrate pressure-temperature equilibrium curves for pure methane, ethane, propane, and for a nominal 70% ethane 30% propane mix.

Fig. 20-19 through 20-21, based on gas gravity, may be used for first approximations of hydrate formation conditions and for estimating permissible expansion of sweet natural gases without the formation of hydrates.

The conditions at which hydrates can form are strongly affected by gas composition. Compositions used for the construction of Fig. 20-19 through Fig. 20-21 are given in Fig. 20-22. The gases are saturated with water.

Example 20-3 — Find the pressure at which hydrate forms for a gas with the following composition. T = 50°F.

Component	Mole Fraction	Mole Wt	lb per lb-mol of Mixture
C_1	0.784	16.043	12.58
C_2	0.060	30.070	1.80
C_3	0.036	44.097	1.59
iC_4	0.005	58.124	0.29
nC_4	0.019	58.124	1.10
N_2	0.094	28.013	2.63
CO_2	0.002	44.010	0.09
Total	1.000		20.08

Mole wt. of gas mixture = 20.08

$$\gamma = \frac{MW_{gas}}{MW_{air}} = \frac{20.08}{28.964} = 0.693$$

FIG. 20-15

Calculated Water Content of Acid Gas Mixtures

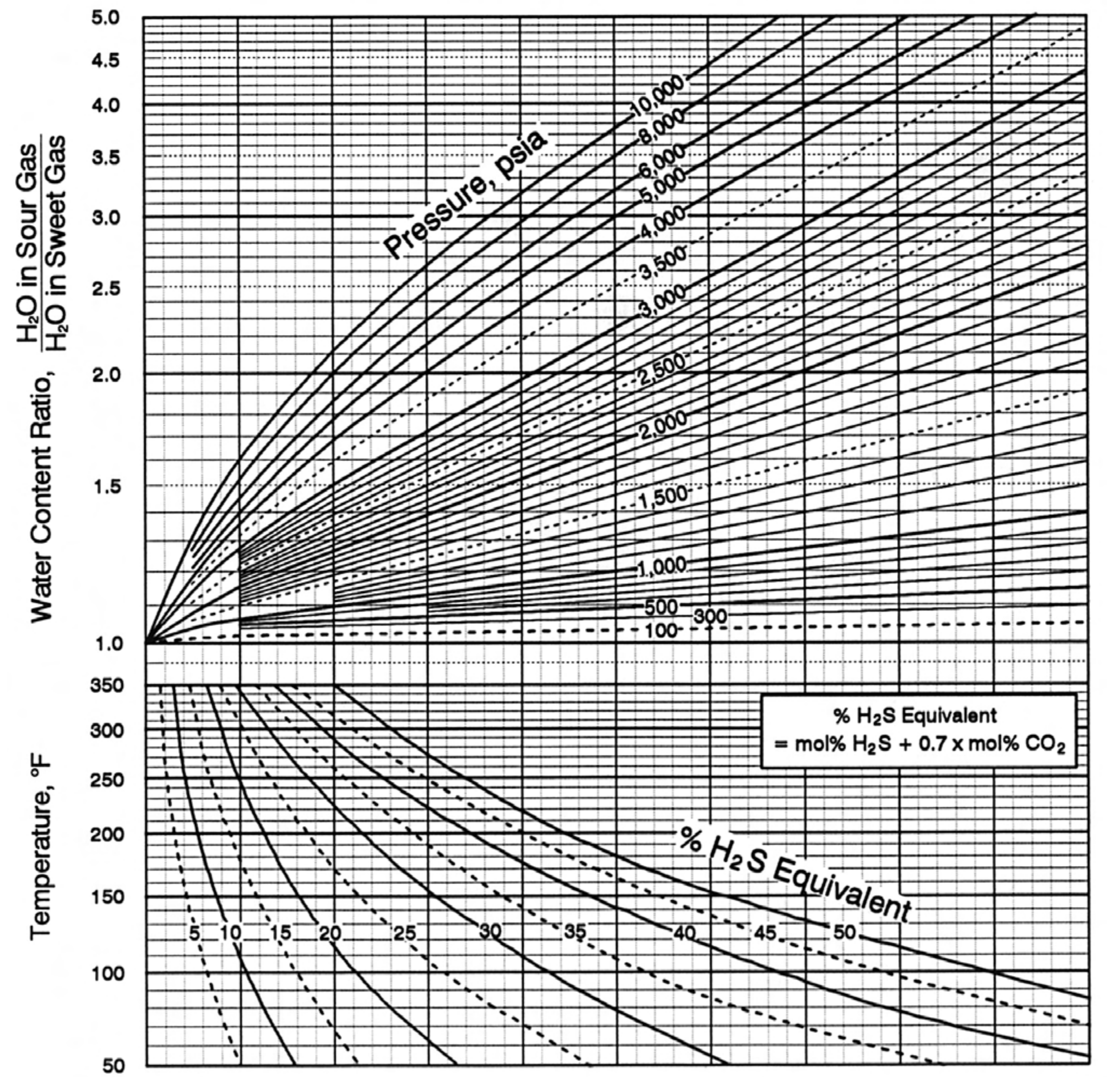

Compliments of Gordon Wichert, Penn West Petroleum Ltd., with all rights reserved.

From Fig. 20-19 at 50°F

P = 320 psia for 0.7 gravity gas

Example 20-4 — The gas in Example 20-3 is to be expanded from 1,500 psia to 500 psia. What is the minimum initial temperature that will permit the expansion without hydrate formation?

The 1,500 psia initial pressure line and the 500 psia final pressure line intersect just above the 110°F curve on Fig. 20-21. Approximately 112°F is the minimum initial temperature.

Example 20-5 — How far may a 0.6 gravity gas at 2,000 psia and 100°F be expanded without hydrate formation?

On Fig. 20-20 find the intersection of 2,000 initial pressure line with the 100°F initial temperature curve. Read on the x-axis the permissible final pressure of 1100 psia.

Example 20-6 — How far may a 0.6 gravity gas at 2,000 psia and 140°F be expanded without hydrate formation?

On Fig. 20-20, the 140°F initial temperature curve does not intersect the 2,000 psia initial pressure line. Therefore, the gas may

FIG. 20-16

Comparison of Experimental vs. Calculated Water Contents for Acid Gases

Mixture	T, °F	P, psia	Water Content lb/MMscf			
			Experimental	Eq 20-1	Fig. 20-12 & 20-13	Fig. 20-15
11% CO_2/89% C_1	100	2000	40.6	42	39.2	43
11% CO_2/89% C_1	160	1000	286	277	287	285
20% CO_2/80% C_1	100	2000	40.6	43	44.1	46
20% CO_2/80% C_1	160	1000	282	278	287	290
20% CO_2/80% C_1	160	2000	172	182	172	194
8% H_2S/92% C_1	130	1500	111	105	112	106
27.5% H_2S/72.5% C_1	160	1367	247	258	273	260
17% H_2S/83% C_1	160	1000	292	278	290	293
C_1/CO_2/H_2S 30%/60%/10%	100	1100	81	72	NA	86
C_1/CO_2/H_2S 9%/10%/81%	100	1900	442	72	NA	NA
5.31% C_1/94.69% CO_2	77	1500	109.2	38	NA	NA
5.31% C_1/94.69% CO_2	122	2000	164.6	105	NA	NA

FIG. 20-17

Water Content of 5.31% C_3/94.69% C_1 Gas in Equilibrium with Hydrate

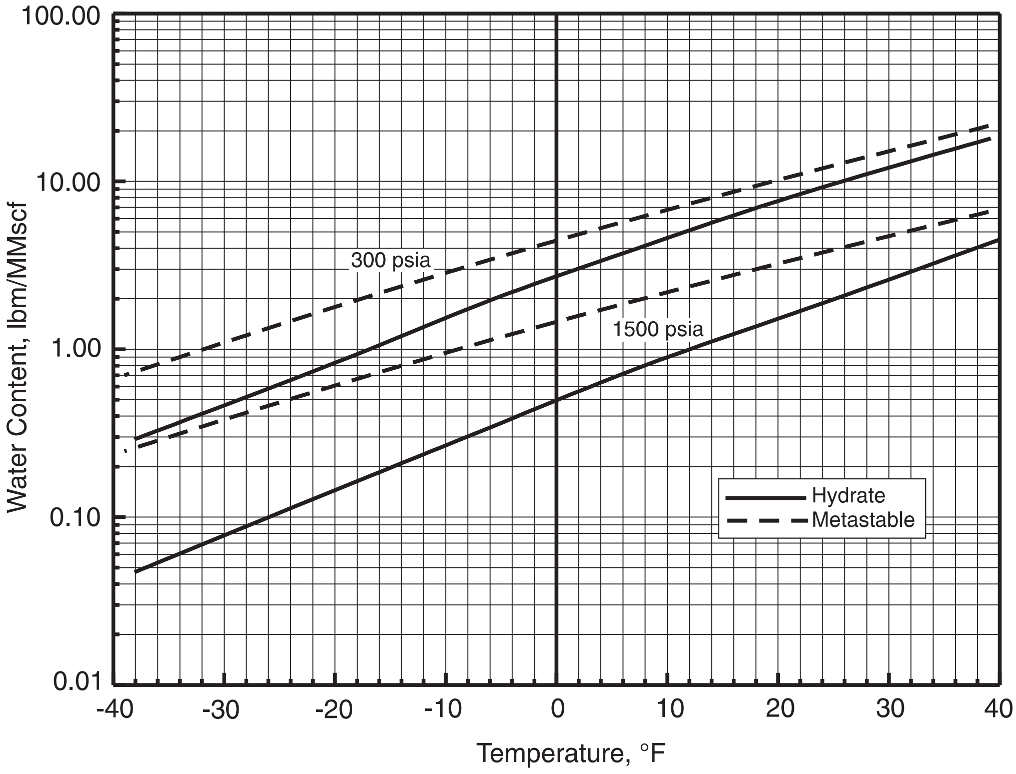

be expanded to atmospheric pressure without hydrate formation.

Conditions predicted by Fig. 20-19 through 20-21 may be significantly in error for compositions other than those used to derive the charts. For more accurate determination of hydrate formation conditions, the following procedures should be followed. In addition, Fig. 20-20 and 20-21 do not account for liquid water and liquid hydrocarbons present or formed during the expansion. These can have a significant effect on the outlet temperature from the pressure reduction device.

Hydrate Prediction Based on Composition for Sweet Gases

Several correlations have proven useful for predicting hydrate formation of sweet gases and gases containing minimal amounts of CO_2 and/or H_2S. The most reliable ones require a gas analysis. The Katz method[14,15] utilizes vapor solid equilibrium constants defined by the Eq 20-3.

$$K_{vs} = \frac{y}{x_s} \qquad \textbf{Eq 20-3}$$

WARNING: Not good for pure components – only mixtures.

The applicable K-value correlations for the hydrate forming molecules (methane, ethane, propane, isobutane[16], normal butane[17], carbon dioxide, and hydrogen sulfide) are shown in Fig. 20-23 to 20-29. Normal butane cannot form a hydrate by itself but can contribute to hydrate formation in a mixture.

For calculation purposes, all molecules too large to form hydrates have a K-value of infinity. These include all normal paraffin hydrocarbon molecules larger than normal butane. Nitrogen is assumed to be a non-hydrate former and is also assigned a K-value of infinity.

The K_{vs} values are used in a "dewpoint" equation to determine the hydrate temperature or pressure. The calculation is iterative and convergence is achieved when the following objective function (Eq 20-4) is satisfied.

$$\sum_{i=1}^{i=n} (y_i / K_{vs}) = 1.0 \qquad \textbf{Eq 20-4}$$

Prudence should be exercised when some higher molecular weight isoparaffins and certain cycloalkanes are present as they can form Structure H hydrates.

Example 20-7 — Calculate the pressure for hydrate formation at 50°F for a gas with the following composition.

Component	Mole Fraction in Gas	at 300 psi		at 400 psi	
		K_{vs}	y/K_{vs}	K_{vs}	y/K_{vs}
Methane	0.784	2.04	0.384	1.75	0.448
Ethane	0.060	0.79	0.076	0.50	0.120
Propane	0.036	0.113	0.319	0.072	0.500
Isobutane	0.005	0.046	0.109	0.027	0.185
n-Butane	0.019	0.21	0.090	0.21	0.090
Nitrogen	0.094	*	0.000	*	0.000
Carbon dioxide	0.002	3.0	0.001	1.9	0.001
Total	1.000		0.979		1.344

* Infinity   Interpolating linearly, $\Sigma y/K_{vs} = 1.0$ at 305 psia

FIG. 20-18

Conditions for Hydrate Formation for Light Gases

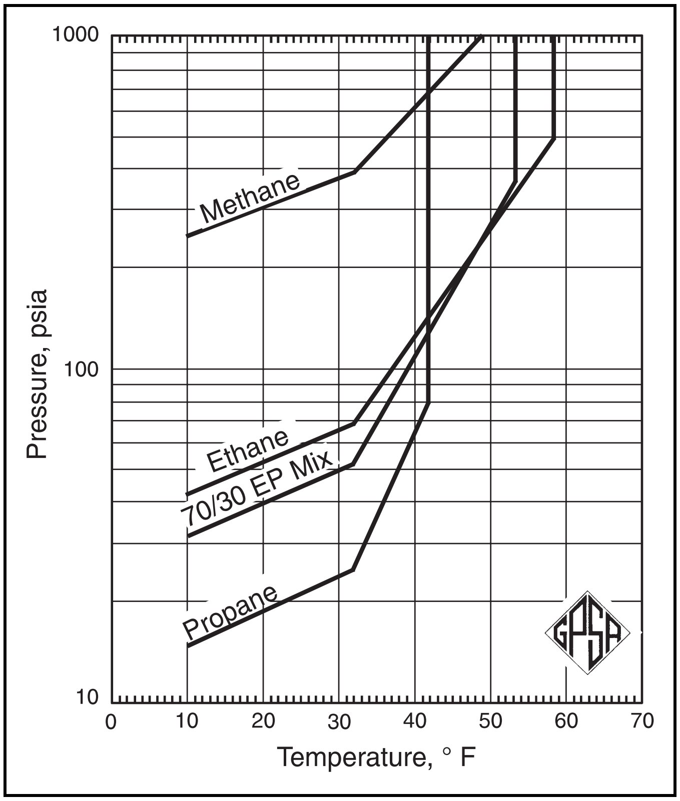

FIG. 20-19

Pressure-Temperature Curves for Predicting Hydrate Formation

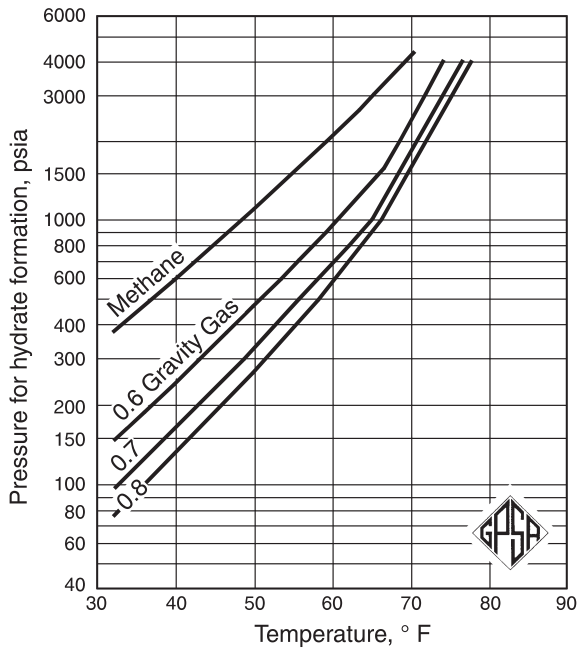

CAUTION: Figures 20-19 through 20-21 should only be used for first approximations of hydrate formation conditions. For more accurate determination of hydrate conditions make calculations with $K_{v\text{-}s}$.

The experimentally observed hydrate-formation pressure at 50°F was 325 psia.

Example 20-8 — The gas with the composition below is at 3500 psia and 150°F. What will be the hydrate conditions when this gas is expanded?

Component	Mole Fraction
C_1	0.9267
C_2	0.0529
C_3	0.0138
iC_4	0.0018
nC_4	0.0034
nC_5	0.0014
Total	1.0000

Solution Steps:

1. Make several adiabatic flash calculations at different pressures and plot on a pressure versus temperature graph. (See Fig. 20-30)

Initial Pressure, psia	Initial Temperature, °F	Final Pressure, psia	Final Temperature, °F
3500	150	300	38
3500	150	400	45
3500	150	500	52
3500	150	600	58
3500	150	700	64

2. Assume some temperature and predict the hydrate formation pressure for this gas using the solid-vapor K-data. Plot the results on Fig. 20-30. Sample calculations for 200 and 300 psia are provided below. This calculation has been repeated for 400, 500, 800 and 1000 psia to develop Fig. 20-30.

T = 40°F	y	200 psia		300 psia	
		K_{vs}	y/K_{vs}	K_{vs}	y/K_{vs}
C_1	0.9267	2.25	0.4119	1.75	0.5295
C_2	0.0529	0.50	0.1058	0.205	0.2580
C_3	0.0138	0.055	0.2509	0.030	0.4600
iC_4	0.0018	0.0225	0.0800	0.0105	0.1714
nC_4	0.0034				
C_5	0.0014				
Total	1.0000		0.8486		1.4189

$\Sigma y/K_{vs}$ = 1.0 @ 227 psia

3. The intersection of the lines in Fig. 20-30 will be the point at which hydrates start to form. In this example, the result is 500 psia and 52°F.

Note: Fig. 20-20 would predict permissable expansion only to a pressure around 700 psia.

The Katz correlation is not recommended above 1000-1500 psia, depending on composition. Prediction of hydrate formation conditions at higher pressures requires the use of other methods. Sloan, et.al.[18] present an alternate set of K_{vs} values which, in general, are valid to 4000 psia. McLeod & Campbell[19] present experimental hydrate data for natural gas mixtures

FIG. 20-20

Permissible Expansion of a 0.6-Gravity Natural Gas Without Hydrate Formation

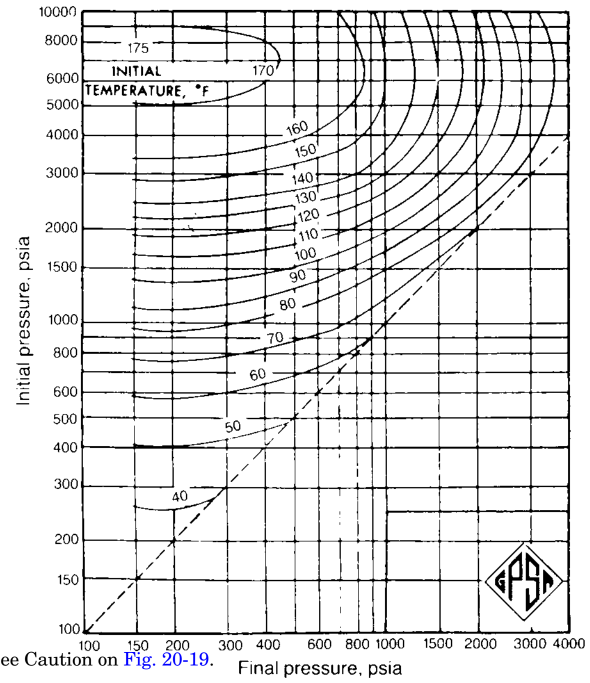

See Caution on Fig. 20-19.

FIG. 20-21

Permissible Expansion of a 0.7-Gravity Natural Gas Without Hydrate Formation

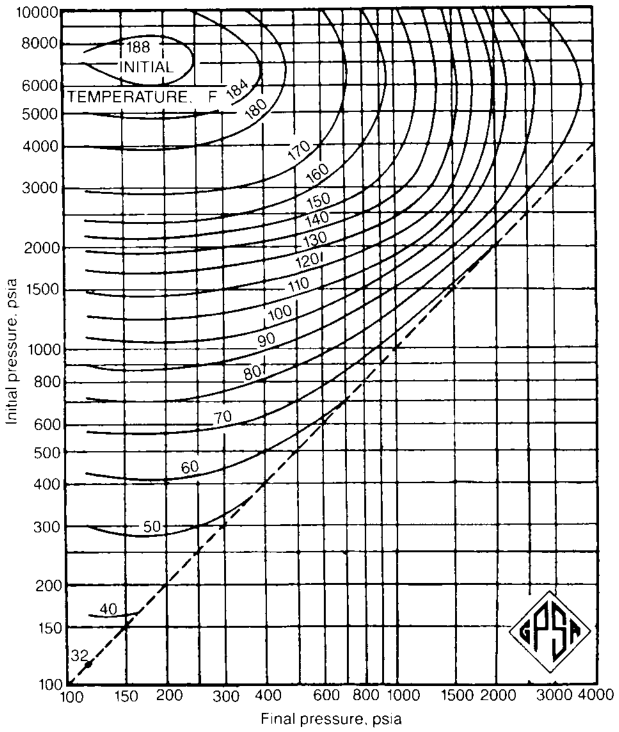

See Caution on Fig. 20-19.

up to 10,000 psia as well as a correlation for estimating high pressure hydrate formation conditions. Blanc & Tournier-Lasserve[20] provide experimental hydrate data to 14,500 psia and compare prediction correlations with experimental data.

Hydrate Predictions for High CO_2/H_2S Content Gases

The Katz method of predicting hydrate formation temperature gives reasonable results for sweet paraffin hydrocarbon gases. The Katz method should not be used for gases containing significant quantities of CO_2 and/or H_2S despite the fact that K_{vs} values are available for these components. Hydrate formation conditions for high CO_2/H_2S gases can vary significantly from those composed only of hydrocarbons. The addition of H_2S to a sweet natural gas mixture will generally increase the hydrate formation temperature at a fixed pressure.[21]

A method by Baille & Wichert for predicting the temperature of high H_2S content gases is shown in Fig. 20-31[22]. This is based on the principle of adjusting the propane hydrate conditions to account for the presence of H_2S as illustrated in the following example.

FIG. 20-22

Gas Compositions Used for Fig. 20-19 through 20-21

	Mole Fraction		
C_1	0.9267	0.8605	0.7350
C_2	0.0529	0.0606	0.1340
C_3	0.0138	0.0339	0.0690
iC_4	0.0018	0.0084	0.0080
nC_4	0.0034	0.0136	0.0240
nC_5	0.0014	0.0230	0.0300
Sp. Gr.	0.603	0.692	0.796

Example 20-9 — Estimate the hydrate formation temperature at 610 psia of a gas with the following analysis using Fig. 20-31.

Component	mol %
N_2	0.30
CO_2	6.66
H_2S	4.18
C_1	84.27
C_2	3.15
C_3	0.67
iC_4	0.20
nC_4	0.19
C_{5+}	0.40
MW = 19.75	γ = 0.682

Solution Steps:

1. Enter left side of Fig. 20-31 at 600 psia and proceed to the H_2S concentration line (4.18 mol%)
2. Proceed down vertically to the specific gravity of the gas (γ = 0.682)
3. Follow the diagonal guide line to the temperature at the bottom of the graph (T = 63.5°F).
4. Apply the C_3 correction using the insert at the upper left. Enter the left hand side at the H_2S concentration and proceed to the C_3 concentration line (0.67%). Proceed down vertically to the system pressure and read the correction on the left hand scale (–2.7°F)

Note: The C_3 temperature correction is negative when on the left hand side of the graph and positive on the right hand side.

T_H = 63.5 – 2.7 = 60.8°F

Fig. 20-31 was developed based on calculated hydrate conditions using the Peng-Robinson EOS. It has proven quite accurate when compared to the limited amount of experimental

FIG. 20-23

Vapor-Solid Equilibrium Constants for Methane

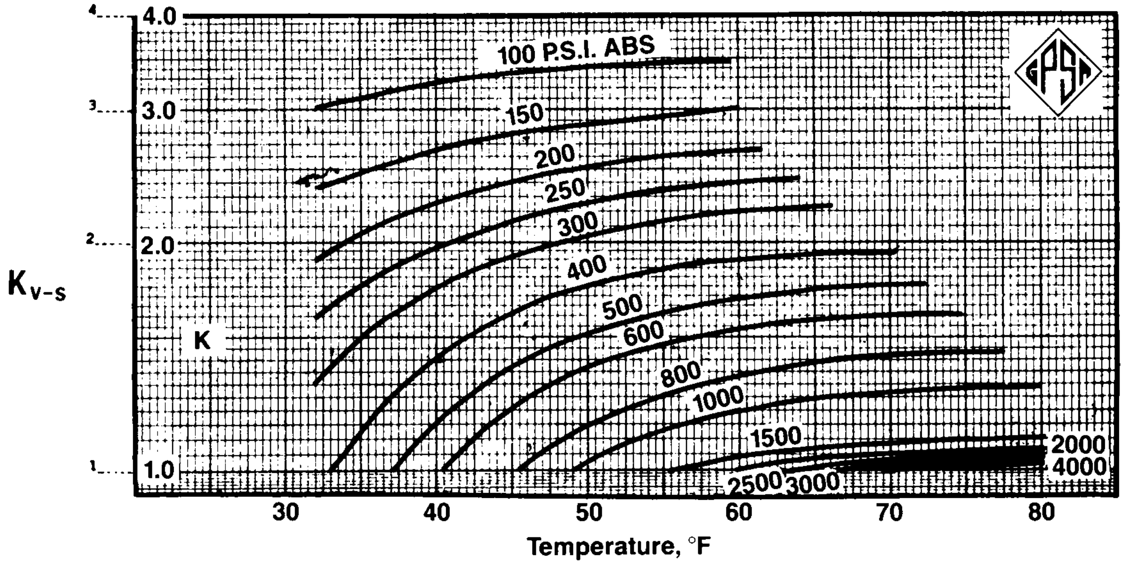

data available. It should only be extrapolated beyond the experimental data base with caution.

Fig. 20-32[23] presents experimental hydrate formation data for three mixtures of methane, propane and hydrogen sulfide. Results of selected hydrate prediction methods are also shown.

The addition of CO_2 to pure methane will slightly increase the hydrate temperature at a fixed pressure.[24] However, the addition of CO_2 to a "typical" sweet natural gas mixture will often lower the hydrate formation temperature at a fixed pressure. Fig. 20-33 is provided to portray these compositional effects. The hydrate curves for four gas compositions are shown. These were generated using a commercial hydrate program employing the Peng-Robinson EOS. The four gas compositions are:

Sweet Gas (0.6 sp. gr. gas from Fig. 20-22)
Sweet Gas containing 10% CO_2
Sour Gas containing 10% H_2S
Sour Gas containing 10% CO_2 and 10% H_2S

Note that H_2S significantly increases the hydrate temperature of a sweet natural gas. In this example, at 1000 psia, the addition of H_2S (10 mol%) to a sweet gas mixture increases the hydrate temperature by 15°F. On the other hand, CO_2 has a minor effect on the hydrate formation temperature and slightly decreases the hydrate temperature for both the "sweet" and "sour" gases in this case.

EOS-based computer programs are probably the most consistent method of predicting hydrate formation temperatures today. Accuracy when compared to experimental data is usually ± 2°F. This is generally adequate for design.

FIG. 20-24

Vapor-Solid Equilibrium Constants for Ethane

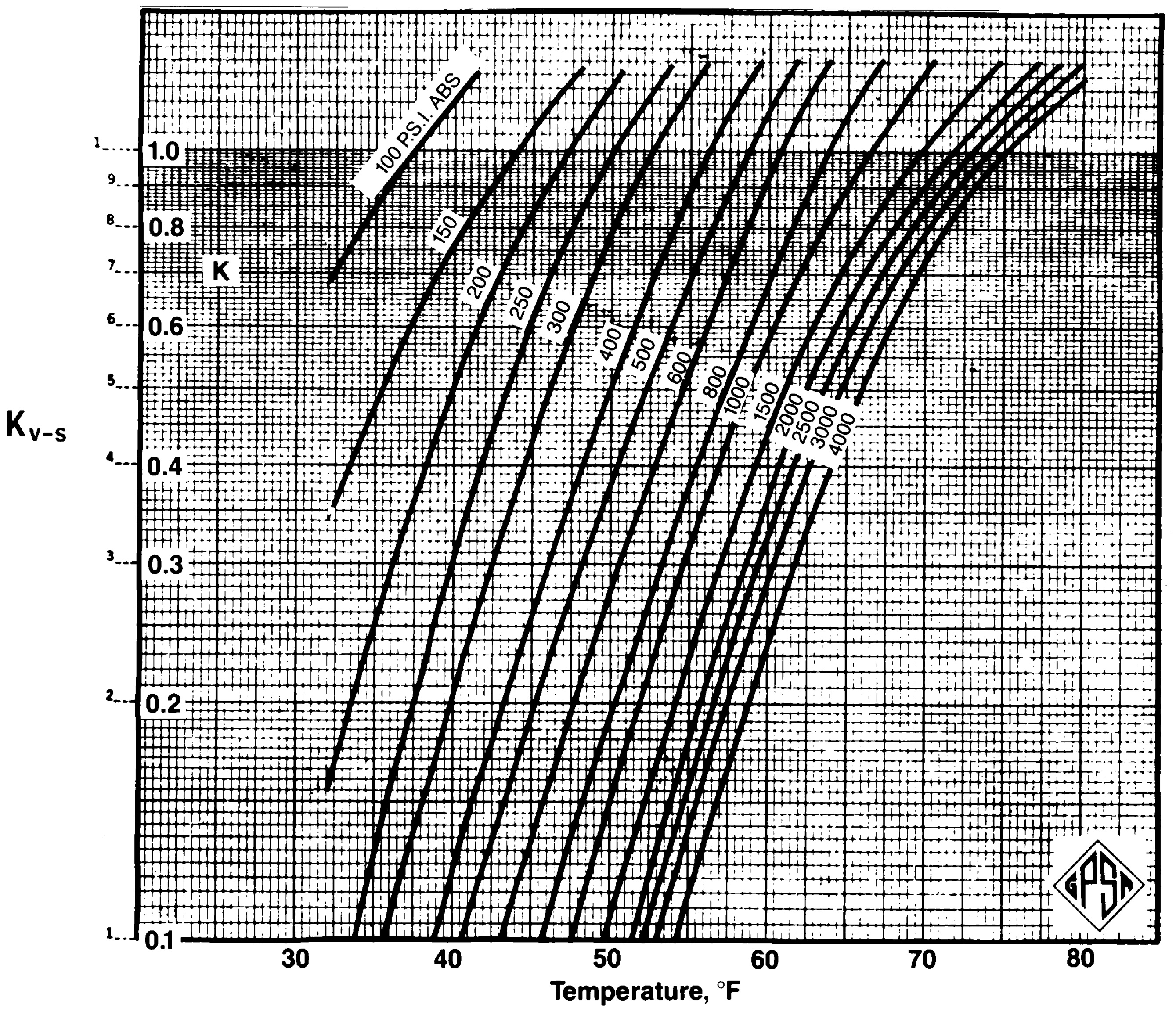

FIG. 20-25

Vapor-Solid Equilibrium Constants for Propane

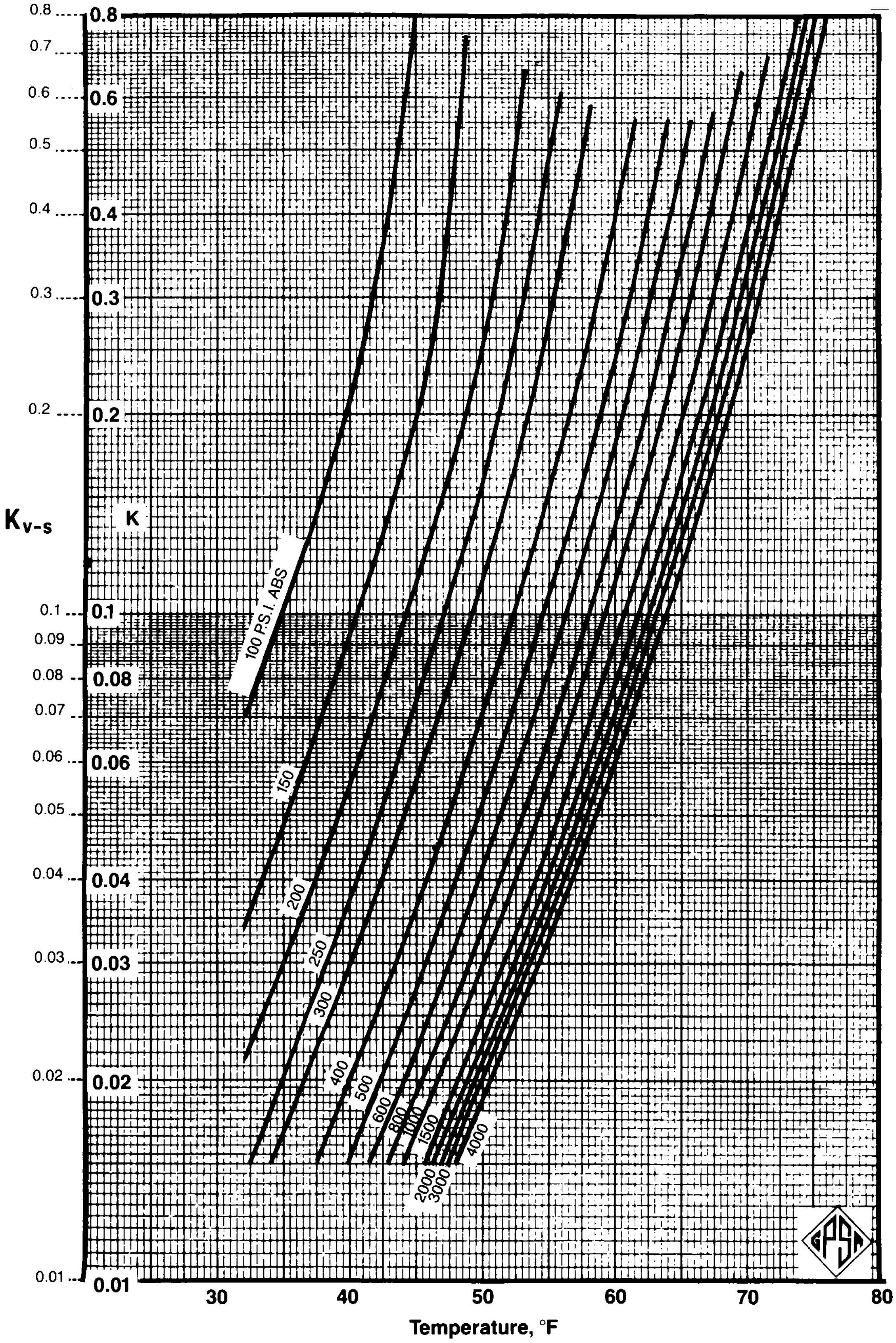

FIG. 20-26

Vapor-Solid Equilibrium Constants for Iso-Butane

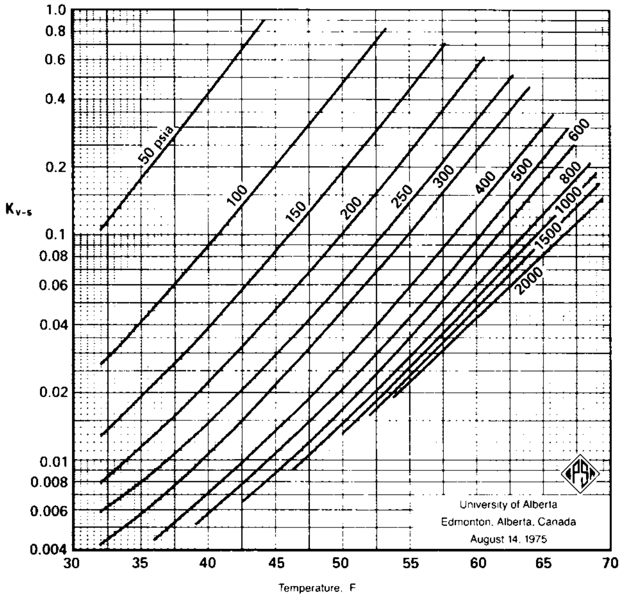

FIG. 20-27

Vapor-Solid Equilibrium Constants for N-Butane

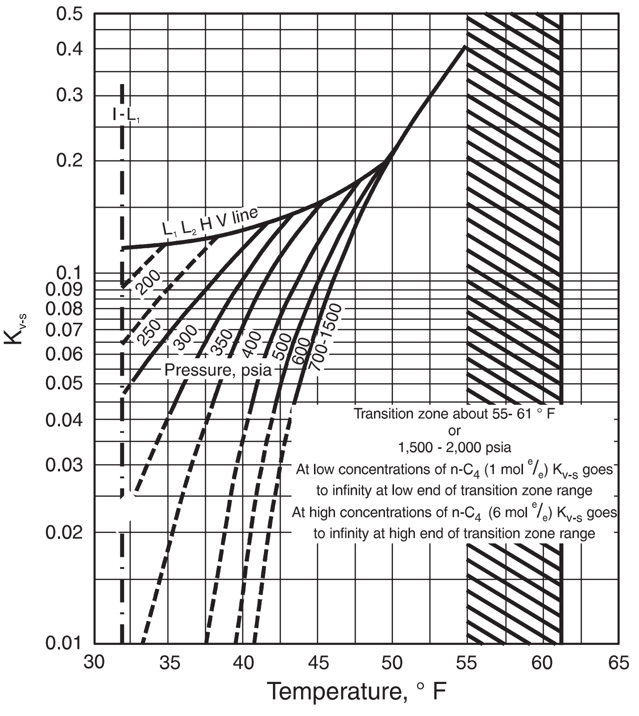

FIG. 20-28

Vapor-Solid Equilibrium Constants for Carbon Dioxide

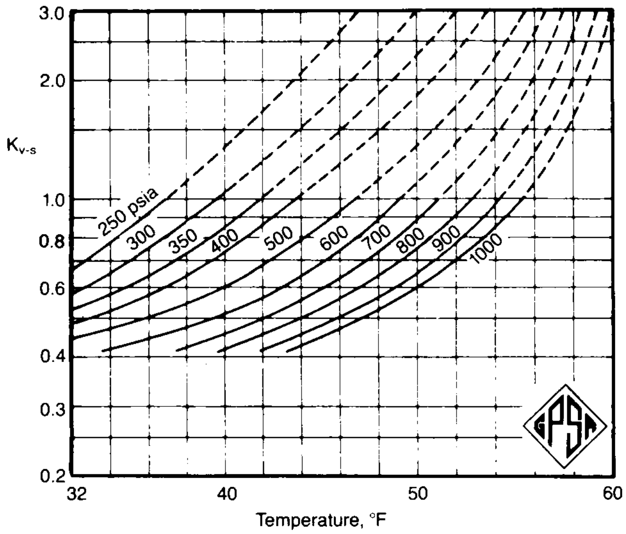

FIG. 20-29

Vapor-Solid Equilibrium Constants for Hydrogen Sulfide

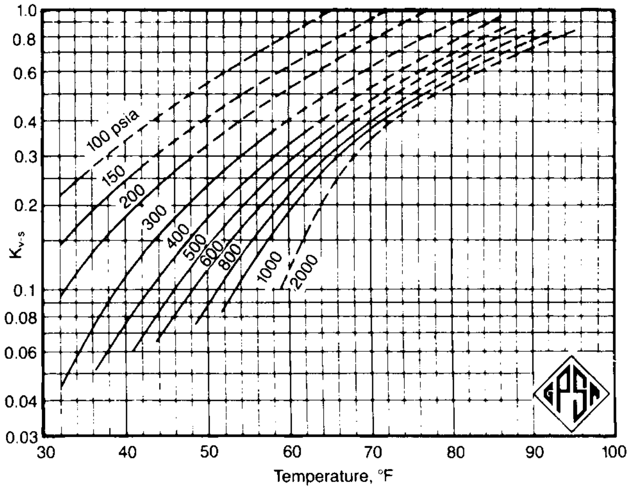

Hydrate Inhibition

The formation of hydrates can be prevented by dehydrating the gas or liquid to eliminate the formation of a condensed water (liquid or solid) phase. In some cases, however, dehydration may not be practical or economically feasible. In these cases, chemical inhibition can be an effective method of preventing hydrate formation. Chemical inhibition utilizes injection of thermodynamic inhibitors or low dosage hydrate inhibitors (LDHIs). Thermodynamic inhibitors are the traditional inhibitors (i.e., one of the glycols or methanol), which lower the temperature of hydrate formation. LDHIs are either kinetic hydrate inhibitors (KHIs) or antiagglomerants (AAs). They do not lower the temperature of hydrate formation, but do diminish its effect. KHIs lower the rate of hydrate formation, which inhibits its development for a defined duration. AAs allow the formation of hydrate crystals but restrict them to sub-millimeter size.

Thermodynamic Inhibitors — Inhibition utilizes injection of one of the glycols or methanol into a process stream where it can combine with the condensed aqueous phase to lower the hydrate formation temperature at a given pressure. Both glycol and methanol can be recovered with the aqueous phase, regenerated and reinjected. For continuous injection in services down to –40°F, one of the glycols usually offers an economic advantage versus methanol recovered by distillation. At cryogenic conditions (below –40°F) methanol usually is preferred because glycol's viscosity makes effective separation difficult.

Ethylene glycol (EG), diethylene glycol (DEG), and triethylene glycol (TEG) glycols have been used for hydrate inhibition. The most popular has been ethylene glycol because of its lower cost, lower viscosity, and lower solubility in liquid hydrocarbons.

Physical properties of methanol and methanol-water mixtures are given in Fig. 20-34 through Fig. 20-37. Physical properties of the most common glycols and glycol-water mixtures are given in Fig. 20-38 through Fig. 20-49. Tabular information for the pure glycols and methanol is provided in Fig. 20-56.

To be effective, the inhibitor must be present at the very point where the wet gas is cooled to its hydrate temperature. For example, in refrigeration plants glycol inhibitors are typically sprayed on the tube-sheet faces of the gas exchangers so that it can flow with the gas through the tubes. As water condenses, the inhibitor is present to mix with the water and prevent hydrates. Injection must be in a manner to allow good distribution to every tube or plate pass in chillers and heat exchangers operating below the gas hydrate temperature.

The viscosities of ethylene glycol and its aqueous solutions increase significantly as temperature decreases, and this must be allowed for in the rating of refrigeration-plant exchangers and chillers.

The inhibitor and condensed water mixture is separated from the gas stream along with a separate liquid hydrocarbon stream. At this point, the water dewpoint of the gas stream is essentially equal to the separation temperature. Glycol-water solutions and liquid hydrocarbons can emulsify when agitated or when expanded from a high pressure to a lower pressure, e.g., JT expansion valve. Careful separator design will allow nearly complete recovery of the diluted glycol for regeneration and reinjection. Fig. 20-57 shows a flow diagram for a typical EG injection system in a refrigeration plant.

FIG. 20-30

Solution Sketch for Example 20-8

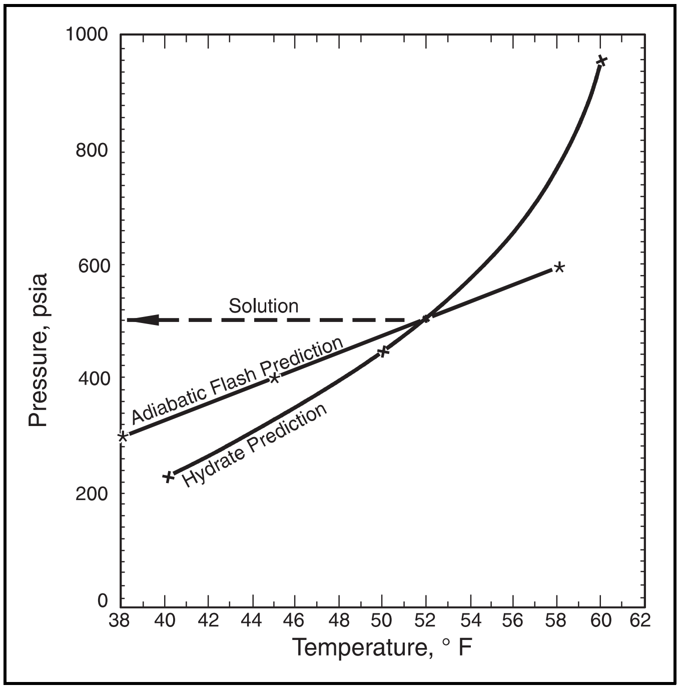

The regenerator in a glycol injection system should be operated to produce a regenerated glycol solution that will have a freezing point below the minimum temperature encountered in the system. This is typically 75-80 wt%. Fig. 20-58 shows the freezing point of various concentrations of glycol water solutions.

The minimum inhibitor concentration in the free water phase may be approximated by Hammerschmidt's equation.[25]

$$d = \frac{K_H X_I}{MW_I (1 - X_I)} \qquad \textbf{Eq 20-5}$$

$$X_I = \frac{d MW_I}{K_H + d MW_I} \qquad \textbf{Eq 20-6}$$

Where K_H (glycols) = 2335 to 4000 and
K_H (methanol) = 2335

The K_H range of 2335 to 4000 for glycols reflects the uncertainty in the value of this parameter. At equilibrium, such as for a laboratory test, 2335 is applicable as illustrated on Fig. 20-60. In some field operations, however, hydrate formation has been prevented with glycol concentrations corresponding with K_H values as high as 4000. This is because hydrate suppression with glycols depends on the system's physical and flow characteristics (i.e., the system dynamics, configuration, location and method of glycol injection, amount of free water, etc.) as well as the properties of the gas and the glycol. Therefore, in the absence of reliable field-test data, a system should be designed for a K_H of 2335. Once the system is operating, the glycol concentration can be reduced to tolerable levels.

Eq 20-5 and Eq 20-6 should not be used beyond 20-25 wt% for methanol and 60-70 wt% for the glycols. For methanol concentrations up to about 50%, the Nielsen-Bucklin equation[26] provides better accuracy:

$$d = -129.6 \ln(x_{H_2O}) \qquad \textbf{Eq 20-7}$$

Note that "x_{H_2O}" in Eq 20-7 is a mole fraction, not a mass fraction. Expressing mole fraction in terms of mass fraction, dew-

FIG. 20-31

Hydrate Chart for Gases Containing H_2S

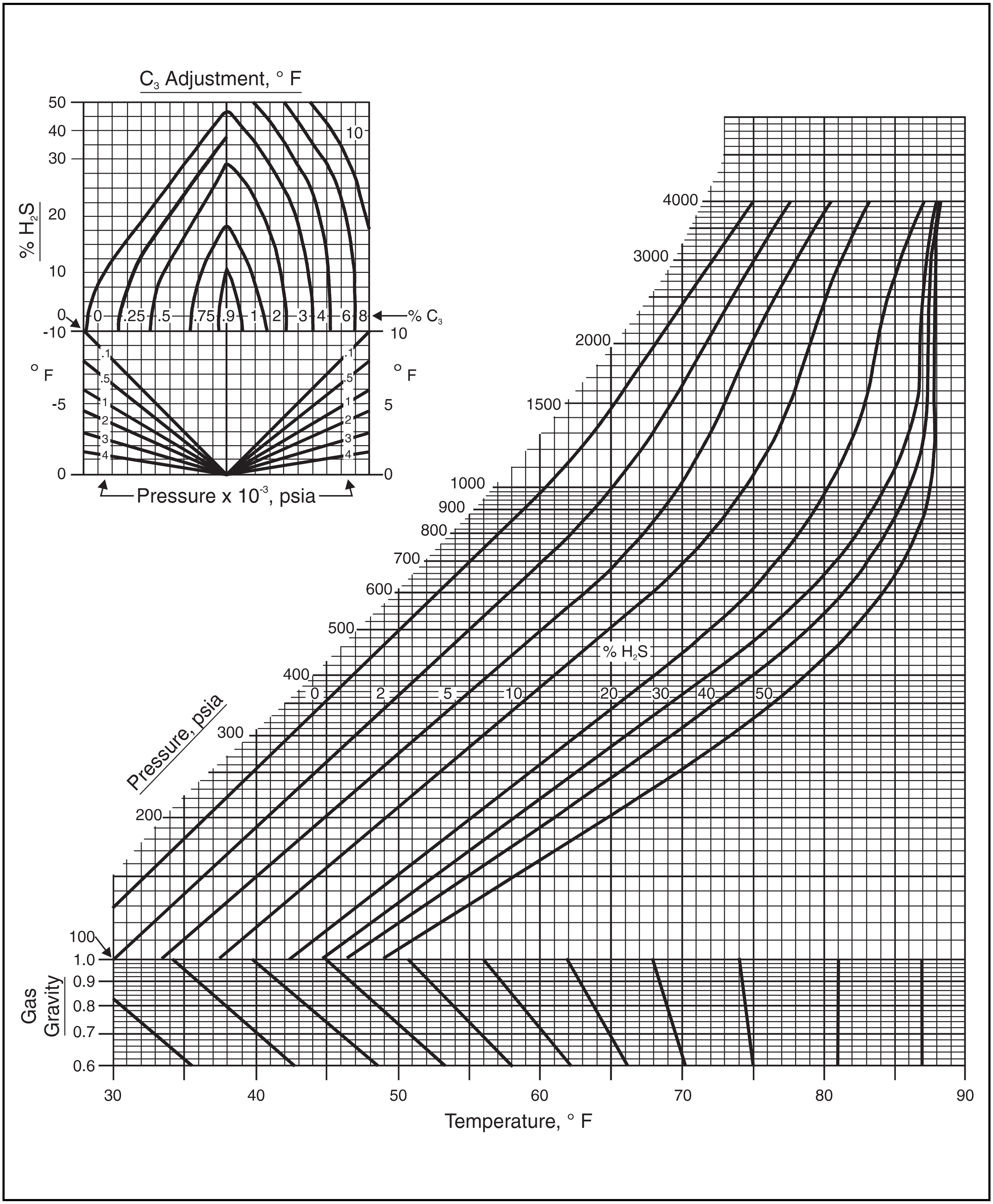

point depression is plotted against the weight percent methanol in Fig. 20-59.

Maddox *et al.*[27] presents a method of estimating the required inhibitor concentration for both methanol and EG. The method is iterative but converges easily after a few iterations.

Figs. 20-60 thru 20-64 provide a comparison of various inhibitor correlations with experimental data.[28,29,30] Experimental data at very high inhibitor concentrations is limited.

Once the required inhibitor concentration has been calculated, the mass of inhibitor required in the water phase may be calculated from Eq 20-8

$$m_I = \frac{X_R \cdot m_{H_2O}}{X_L - X_R} \qquad \textbf{Eq 20-8}$$

The amount of inhibitor to be injected not only must be sufficient to prevent freezing of the inhibitor water phase, but also must be sufficient to provide for the equilibrium vapor phase content of the inhibitor and the solubility of the inhibitor in any liquid hydrocarbon. The vapor pressure of methanol is high enough that significant quantities will vaporize. Methanol vaporization losses may be estimated from Fig. 20-65.[31] Fig. 20-65 is extrapolated above 700 psia. Recent studies indicate Fig. 20-65 may underestimate vapor phase methanol losses at higher pressures. Glycol vaporization losses are generally very small and are typically ignored in calculations.

Inhibitor losses to the hydrocarbon liquid phase are more difficult to predict. Solubility is a strong function of both the water phase and hydrocarbon phase compositions. Fig. 20-66 presents experimental data[32,33,34] showing solubility of methanol in a paraffinic hydrocarbon liquid as a function of temperature and methanol concentration. Methanol solubility in naphthenic hydrocarbons is slightly less than paraffinic, but solubility in aromatic hydrocarbons may be four to six times higher than in parafins.

Solubility of EG in the liquid hydrocarbon phase is extremely small.[29] A solubility of 0.3 lb per 1000 gal. (U.S.) of NGL is often used for design purposes. However, entrainment and other physical losses may result in total losses significantly higher than this.

Example 20-10—100 MMscf/d of natural gas leaves an offshore platform at 100°F and 1200 psia. The gas comes onshore at 40°F and 900 psia. The hydrate temperature of the gas is 65°F. Associated condensate production is 10 Bbl/MMscf. The condensate has an API gravity of 50 and a MW of 140. Calculate the amount of methanol and 80 wt% EG inhibitor required to prevent hydrate formation in the pipeline.

Solution Steps:

Methanol

1. Calculate the amount of water condensed per day

$$\text{from Fig. 20-4,} \quad \begin{aligned} W_{in} &= 53.0 \text{ lb / MMscf} \\ W_{out} &= \underline{\;9.5 \text{ lb / MMscf}\;} \\ \Delta W &= 43.5 \text{ lb / MMscf} \end{aligned}$$

Water condensed = (100)(53 – 9.5) = 4350 lb/day

2. Calculate required methanol inhibitor concentration from Eq 20-5 and 20-7 (with Fig. 20-59).

$$d = 25°\text{F} \qquad MW = 32$$

Solving for X_I,

$$X_I = 0.255, \text{ Eq 20-5}$$

$$X_I = 0.275, \text{ Eq. 20-7} \qquad \text{(use this value in subsequent calculations)}$$

3. Calculate mass rate of inhibitor in water phase from Eq. 20-8 (assume 100% methanol is injected)

$$m_I = \frac{X_R \cdot m_{H_2O}}{X_L - X_R} = \frac{(0.275)\,(4350)}{(1 - 0.275)} = 1650 \text{ lb/day}$$

4. Estimate vaporization losses from Fig. 20-65.

$$@\ 40°\text{F and 900 psia, losses} = 1.05 \frac{\text{lb/MMscf}}{\text{wt\% MeOH}}$$

$$\text{daily losses} = (1.05)(100)(27.5) = 2890 \text{ lb/day}$$

5. Estimate losses to hydrocarbon liquid phase from Fig. 20-66.

$$@\ 40°\text{F and 27.5 wt\% MeOH,} \;\; x_{MeOH} \approx 0.2 \text{ mol\%}$$

lb • mols of condensate per day–

$$\left(\frac{100 \text{ MMscf}}{\text{day}}\right)\left(\frac{10 \text{ bbl}}{\text{MMscf}}\right)\left(\frac{(350)(0.78)\text{ lb}}{\text{bbl}}\right)\left(\frac{1 \text{ lb} \cdot \text{mol}}{140 \text{ lb}}\right)$$

$$= 1950 \text{ lb–mols/day}$$

$$\begin{aligned} \text{lb} \cdot \text{mols methanol} &= (1950)(0.002) \\ &= 3.9 \text{ lb} \cdot \text{mols/day} \end{aligned}$$

lb methanol = (3.9)(32) = 125 lb/day

$$\begin{aligned} \text{Total methanol injection rate} &= 1650 + 2890 + 125 \\ &= 4665 \text{ lb/day} \end{aligned}$$

Methanol left in the gas phase can be recovered by condensation with the remaining water in downstream chilling processes. Likewise, the methanol in the condensate phase can be recovered by water by downstream water washing.

80 wt% EG

1. Calculate required inhibitor concentration from Eq 20-6.

$$d = 25°\text{F} \qquad MW = 62 \qquad K_H = 2335$$

Solving for X_I, $X_I = 0.40$

2. Calculate mass rate of inhibitor in water phase from Eq. 20-8.

$$\dot{m}_I = \frac{(0.40)(4350)}{(0.8 - 0.40)} = 4350 \text{ lb / day}$$

Vaporization and liquid hydrocarbon losses are negligible.

Inhibitor losses represent a significant operating cost and can cause problems in downstream process units. Efficient inhibitor separation should be provided.

Low Dosage Hydrate Inhibitors (LDHIs)—LDHIs can provide significant benefits compared to thermodynamic inhibitors including:

- Significantly lower inhibitor concentrations and therefore dosage rates. Concentrations rante from 0.1 to 1.0 weight percent polymer in the free water phase, whereas alcohols can be as high as 50%
- Lower inhibitor loss caused by evaporation, particularly compared to methanol
- Reduced capital expenses through decreased chemial storage and injection rate requirements; and no need for regeneration because the chemicals are not currently recovered. These are especially appropriate for offshore where weight and space are critical to costs
- Reduced operating expenses in many cases through decreased chemical consumption and delivery frequency
- Increased production rates, where inhibitor injection capacity or flowline capacity is limited

FIG. 20-32

Experimental vs. Predicted Hydrate Conditions for Gases Containing C_1, C_3, and H_2S

Composition, mol %				Experimental Data[18]		Predicted Temperature,°F		
C_1	C_3	H_2S	γ	Temperature, °F	Pressure, psia	Fig. 20-19	Eq 20-4	Fig. 20-31
88.654	7.172	4.174	0.649	40.3	102.4	NA	36.6	41.8
88.654	7.172	4.174	0.649	51.8	205.8	41	47.2	52.3
88.654	7.172	4.174	0.649	57.6	293.5	45	52.2	57.3
88.654	7.172	4.174	0.649	64.4	488.3	53	58.9	65.2
81.009	7.016	11.975	0.696	50.7	118.5	34	41.2	51.4
81.009	7.016	11.975	0.696	67.1	408	53	58.9	70.7
60.888	7.402	31.71	0.823	55.6	99.5	37	44.7	55.8
60.888	7.402	31.71	0.823	66.4	209.5	47	59.6	68.5
60.888	7.402	31.71	0.823	75.7	371	55	67.5	76.6
60.888	7.402	31.71	0.823	82.0	620	62	75.3	83.6

FIG. 20-33

Hydrate Formation Conditions for Sweet Gas Showing Effects of CO_2 and H_2S

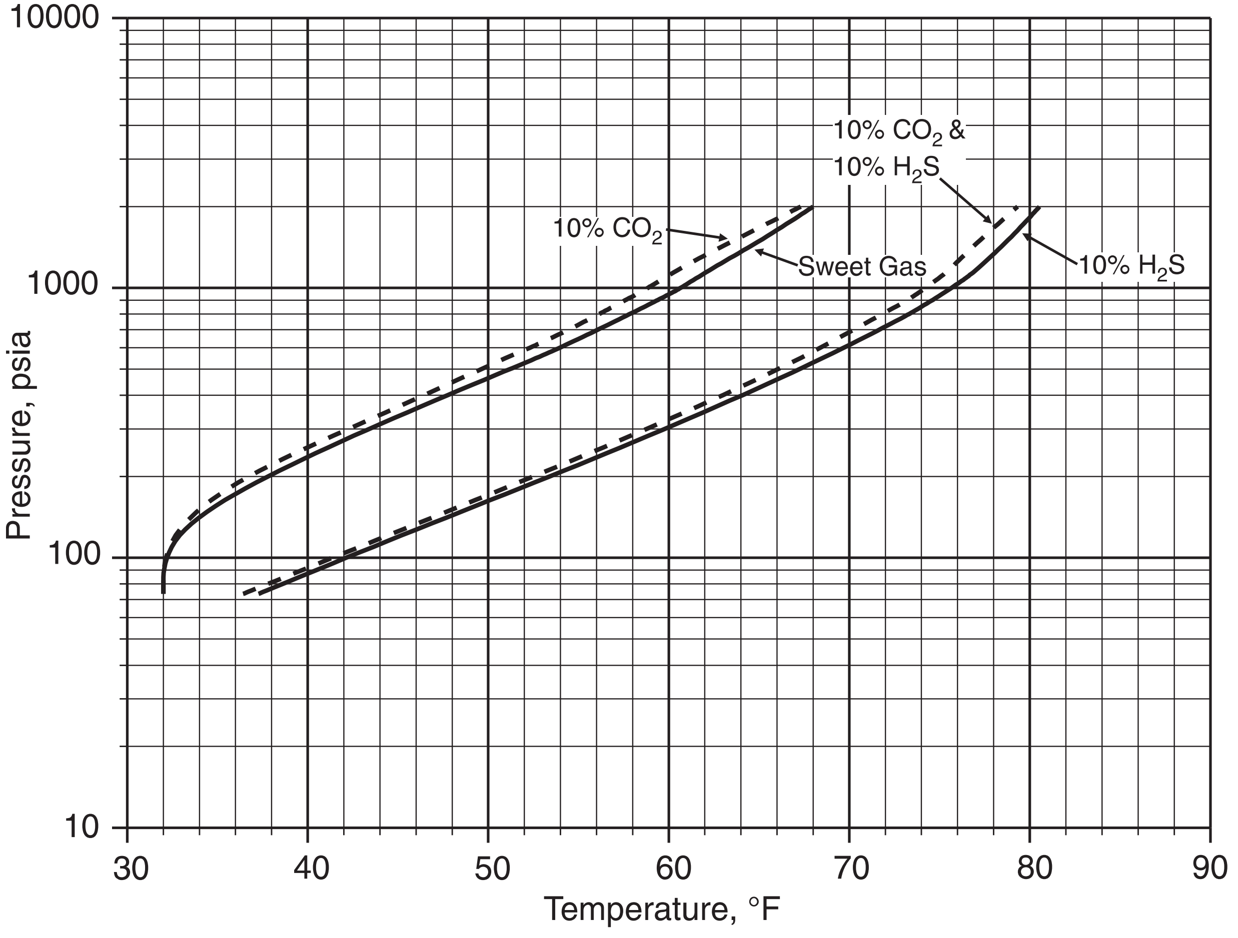

FIG. 20-34

Density of Aqueous Methanol Solutions at Various Temperatures

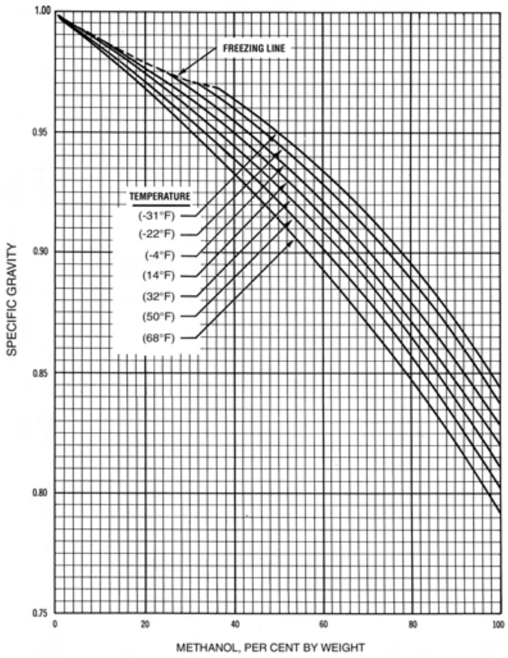

FIG. 20-35

Vapor Pressure of Aqueous Methanol Solutions at Various Temperatures

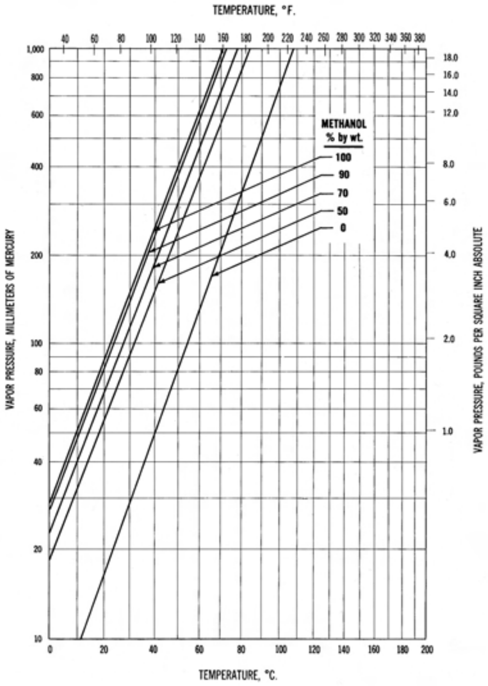

FIG. 20-36

Heat of Vaporization of Methanol Versus Temperature

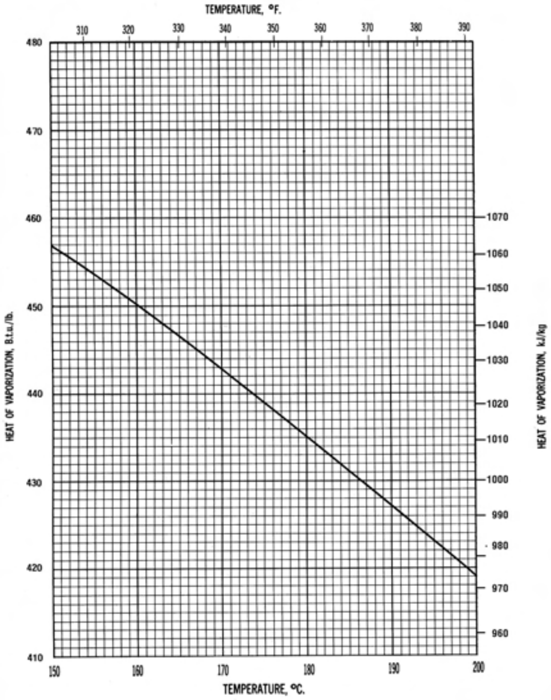

FIG. 20-37

Freezing Points of Aqueous Methanol Solutions

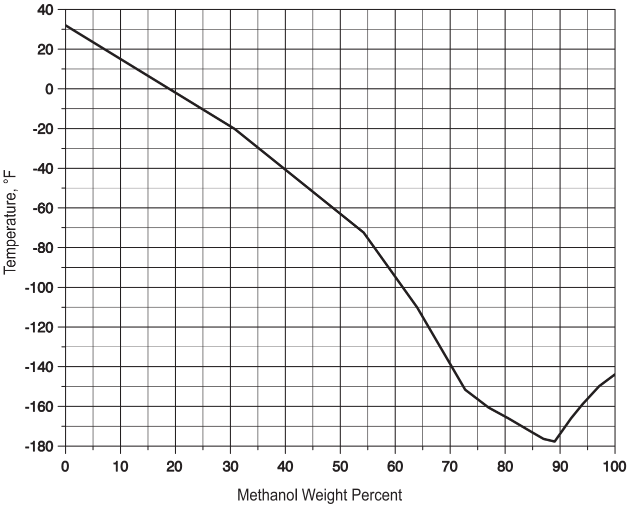

Figures 20-38 through 20-49 are reproduced from ***Gas Conditioning Fact Book***, 1962, and Figures 20-50 through 20-55 are reproduced from the Dow monoethylene, diethylene, and triethylene glycol guides, 2003, with permission from "The Dow Chemical Company" and subject to all warranty disclaimers therein.

FIG. 20-38

Densities of Aqueous Ethylene Glycol Solutions

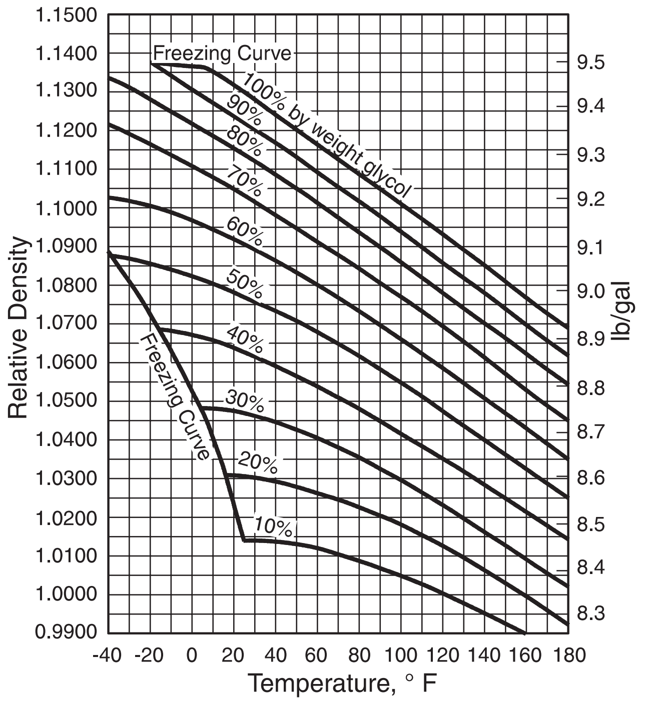

FIG. 20-40

Densities of Aqueous Triethylene Glycol Solutions

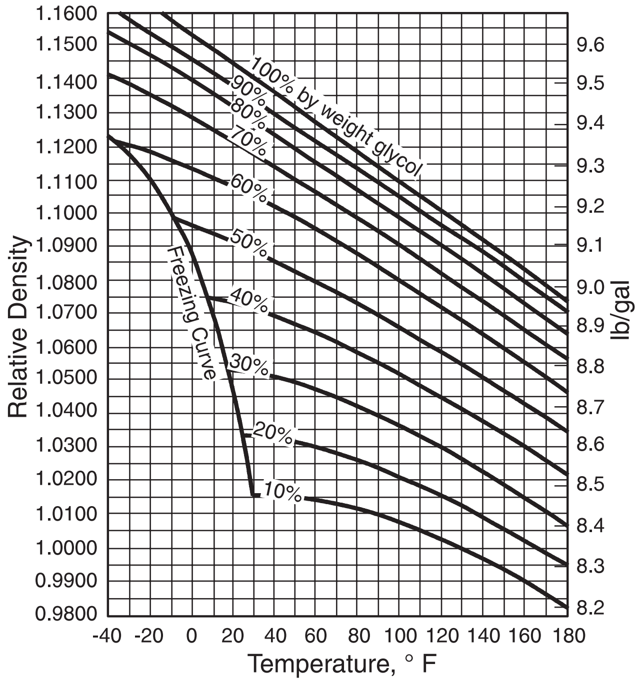

FIG. 20-39

Densities of Aqueous Diethylene Glycol Solutions

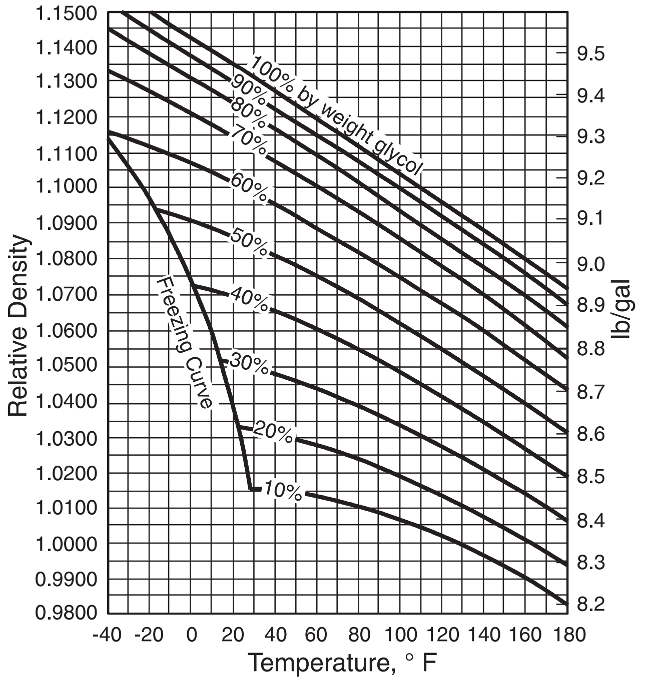

FIG. 20-41

Viscosities of Aqueous Ethylene Glycol Solutions

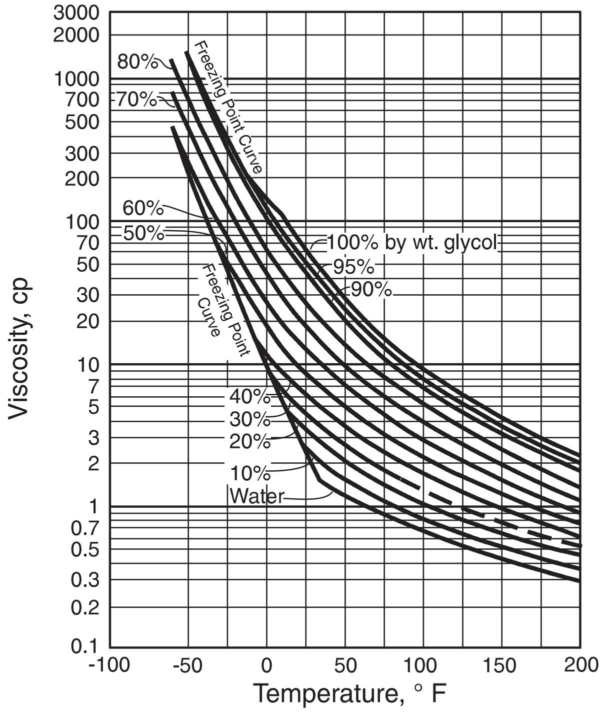

FIG. 20-42

Viscosities of Aqueous Diethylene Glycol Solutions

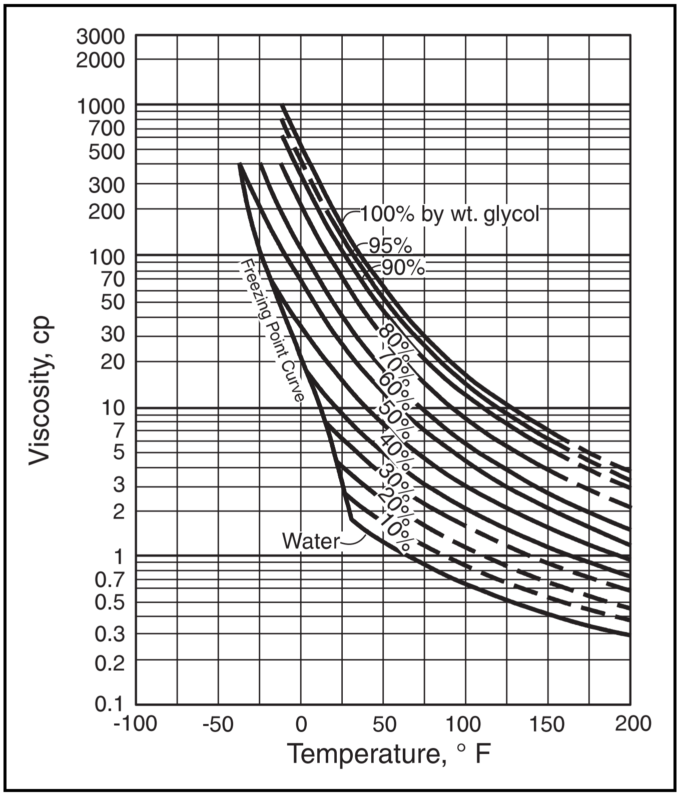

FIG. 20-44

Heat Capacities of Aqueous Ethylene Glycol Solutions

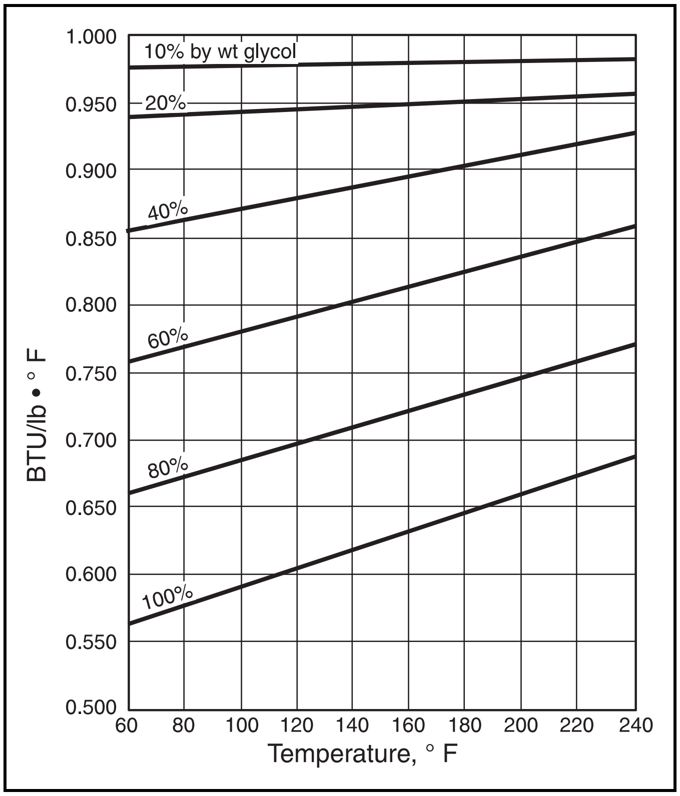

FIG. 20-43

Viscosities of Aqueous Triethylene Glycol Solutions

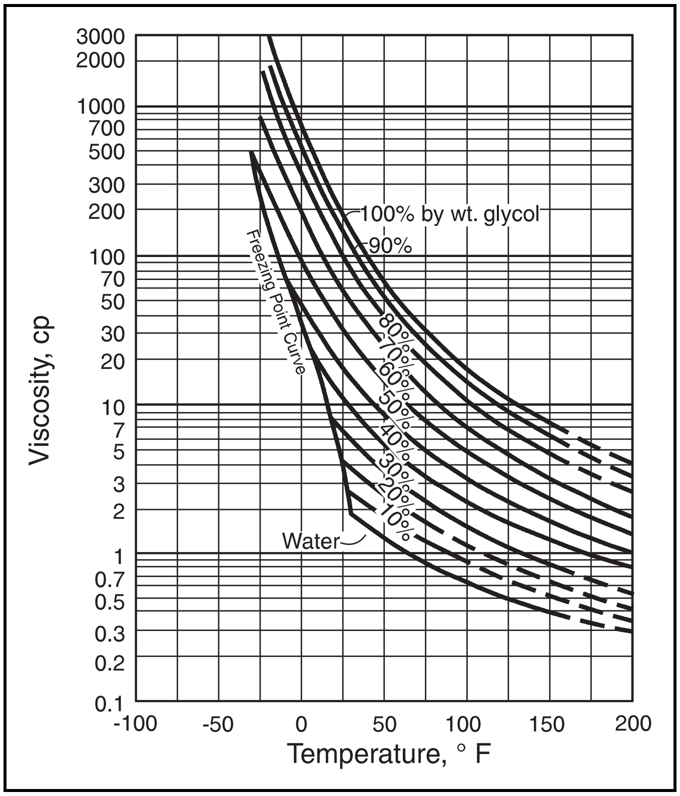

FIG. 20-45

Heat Capacities of Aqueous Diethylene Glycol Solutions

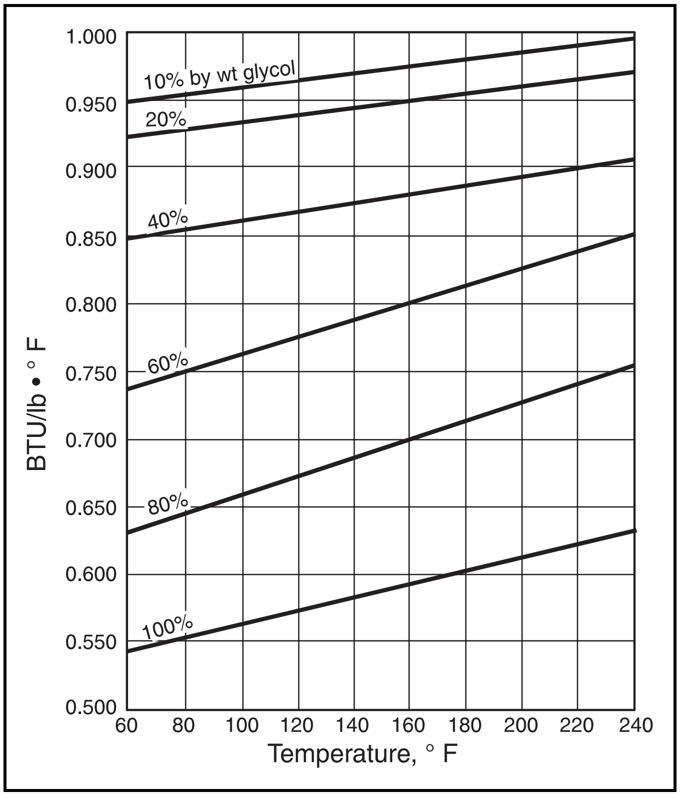

FIG. 20-46

Heat Capacities of Aqueous Triethylene Glycol Solutions

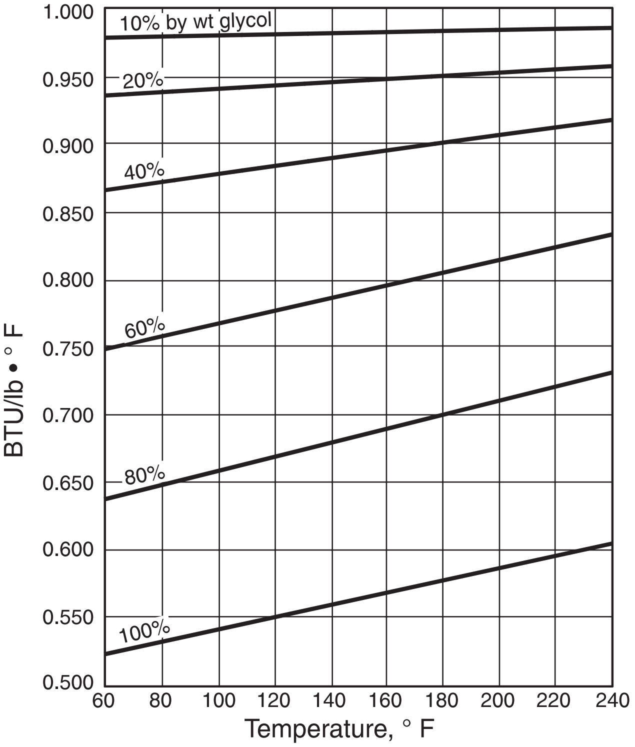

FIG. 20-48

Thermal Conductivity of Diethylene Glycol–Water Mixtures

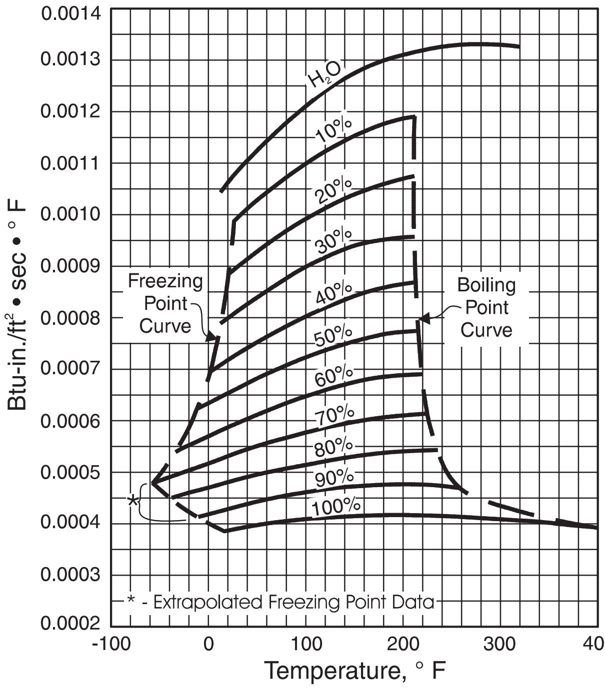

FIG. 20-47

Thermal Conductivity of Ethylene Glycol–Water Mixtures

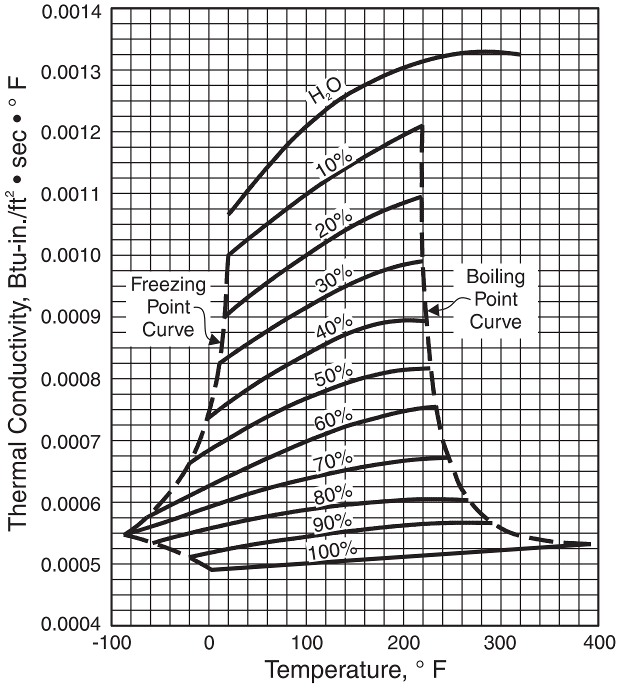

FIG. 20-49

Thermal Conductivity of Triethylene Glycol–Water Mixtures

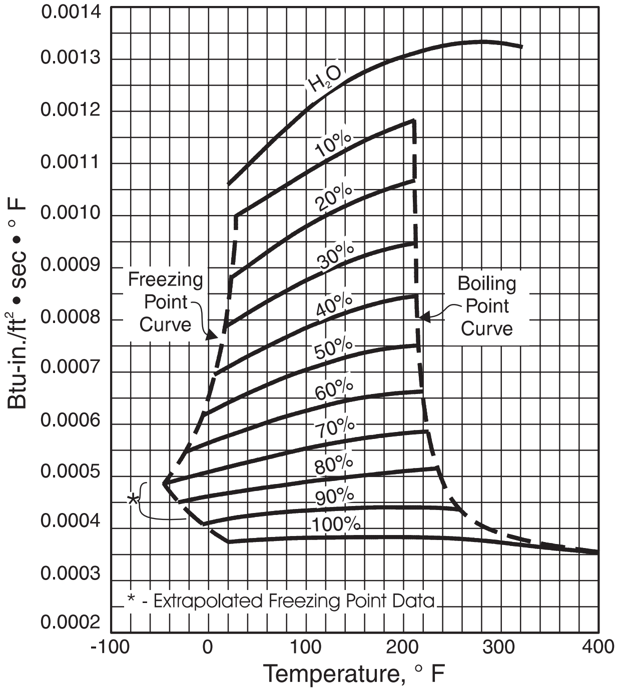

FIG. 20-50

Vapor Pressures of Ethylene Glycol at Various Temperatures

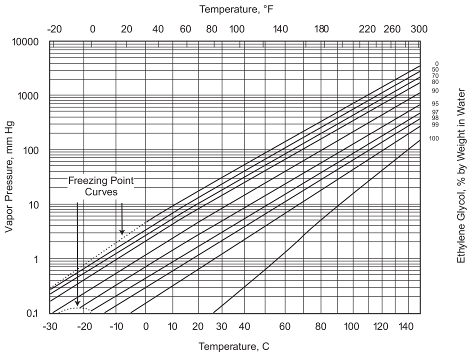

Ethylene Glycol Antoine Constants for Calculating Vapor Pressure

3-Constant Equation

$\log_{10}(P) = A - B/(T + C)$

$P = \text{mmHg}, T = °C$

EG, Wt%	*A*	*B*	*C*
0	7.966820	1668.210	228.000
50	7.901886	1691.452	229.778
70	7.833380	1712.369	231.166
80	7.775839	1736.188	232.689
90	7.685032	1792.464	235.836
95	7.856193	2019.846	251.898
97	8.123192	2273.083	267.910
98	8.384100	2493.364	279.584
99	9.189807	3103.597	309.713
100	8.212109	2161.907	208.429

Courtesy of The Dow Chemical Company. All rights reserved.

FIG. 20-51

Vapor Pressures of Aqueous Diethylene Glycol Solutions at Various Temperatures

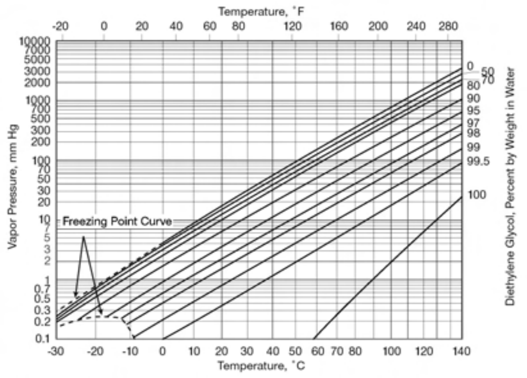

Diethylene Glycol Antoine Constants for Calculating Vapor Pressure

3-Constant Antoine Equation

$\log_{10}(P) = A - B/(T + C)$

$P = \text{mm Hg}, T = °C$

DiEG, Wt%	*A*	*B*	*C*
0	7.959199	1663.545	227.575
50	7.849221	1646.755	226.918
70	7.720100	1632.771	226.643
80	7.605747	1630.455	227.213
90	7.411919	1649.970	229.847
95	7.246397	1699.218	233.944
97	7.234579	1813.670	243.670
98	7.299095	1951.128	254.593
99	7.626717	2329.389	281.281
99.5	8.405776	3045.472	325.327
100	7.700795	2019.255	173.622

Courtesy of The Dow Chemical Company. All rights reserved.

FIG. 20-52

Vapor Pressures of Aqueous Triethylene Glycol Solutions at Various Temperatures

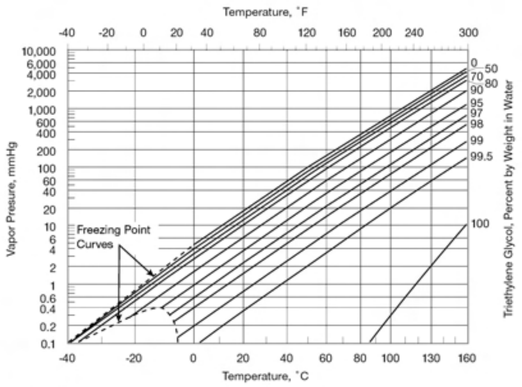

Triethylene Glycol Antoine Constants for Calculating Vapor Pressure

3-Constant Antoine Equation

$\log_{10}(P) = A - B/(T + C)$

$P = \text{mm Hg}, T = °C$

TriEG, Wt%	*A*	*B*	*C*
0	7.959199	1663.545	227.575
50	7.922294	1671.501	228.031
70	7.878546	1681.363	228.237
80	7.837076	1697.006	228.769
90	7.726126	1728.047	229.823
95	7.620215	1806.257	236.227
97	7.495349	1841.522	238.048
98	7.404435	1881.474	240.666
99	7.211145	1926.114	242.799
99.5	7.042989	1970.802	242.865
100	7.472115	2022.898	152.573

Courtesy of The Dow Chemical Company. All rights reserved.

FIG. 20-53

Dew Points of Aqueous Ethylene Glycol Solutions at Various Contact Temperatures

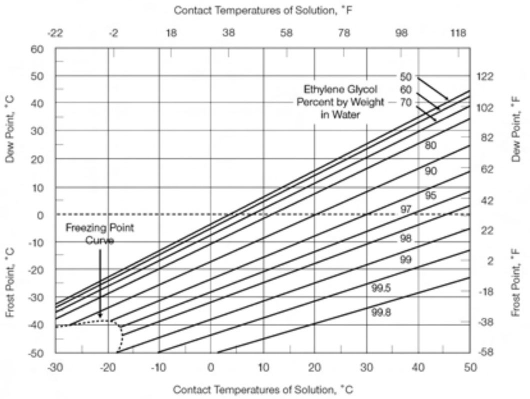

Dew or Frost Point = A + BT

T = Temperature, °C

EG, Wt%	*A*	*B*
50.0	-3.532	0.96530
60.0	-5.043	0.95130
70.0	-7.231	0.93130
80.0	-10.663	0.90020
90.0	-17.081	0.84200
95.0	-23.575	0.77810
97.0	-28.124	0.72850
98.0	-31.807	0.69790
99.0	-37.996	0.65700
99.5	-43.626	0.61100
99.8	-50.671	0.55450

Courtesy of The Dow Chemical Company. All rights reserved.

FIG. 20-54

Dew Points of Aqueous Diethylene Glycol Solutions at Various Contact Temperatures

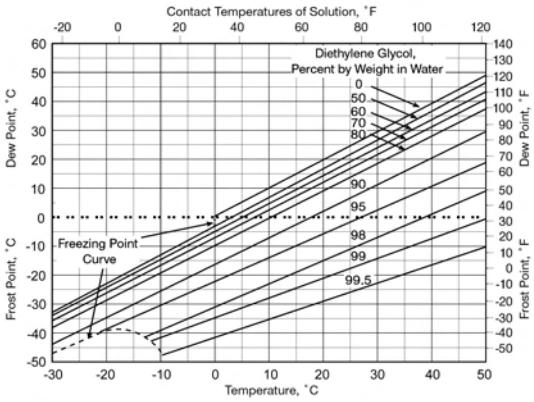

Dew or Frost Point = A + BT
T = Temperature, °C

DEG, Wt%	*A*	*B*
0	0.0000	0.99202
50	-3.1257	1.00710
60	-5.0603	0.97853
70	-7.1426	0.96426
80	-10.127	0.95719
90	-16.857	0.93572
95	-22.731	0.82862
98	-31.334	0.80003
99	-35.064	0.69450
99.5	-41.845	0.62866

Courtesy of The Dow Chemical Company. All rights reserved.

- Lower toxicity

Kinetic Hydrate Inhibitors — KHIs were designed to inhibit hydrate formation in flowlines, pipelines, and downhole equipment operating within hydrate-forming conditions such as subsea and cold-weather environments. Their unique chemical structure significantly reduces the rate of nucleation and hydrate growth during conditions thermodynamically favorable for hydrate formation, without altering the thermodynamic hydrate formation conditions (i.e., temperature and pressure). This mechanism differs from methanol or glycol, which depress the thermodynamic hydrate formation temperature so that a flowline operates outside hydrate-forming conditions.

KHIs Compared to Methanol or Glycols— KHIs inhibit hydrate formation at a concentration range of 0.1–1.0 weight percent polymer in the free water phase. At the maximum recommended dosage, the current inhibition capabilities are 28°F of subcooling in a gas system and 20°F in an oil system with efforts continuing to expand the region of effectiveness. For relative comparison, methanol or glycol typically may be required at concentrations ranging 20 to 50 weight percent respectively in the water phase.

KHI Screening Considerations — Although KHIs are applicable under most producing conditions, certain conditions must be considered when evaluating a potential application, which include water salinity, freezing conditions, hold time (i.e., period of effectiveness), water saturation, and high-temperature processes.

FIG. 20-55

Dew Points of Aqueous Triethylene Glycol Solutions at Various Contact Temperatures

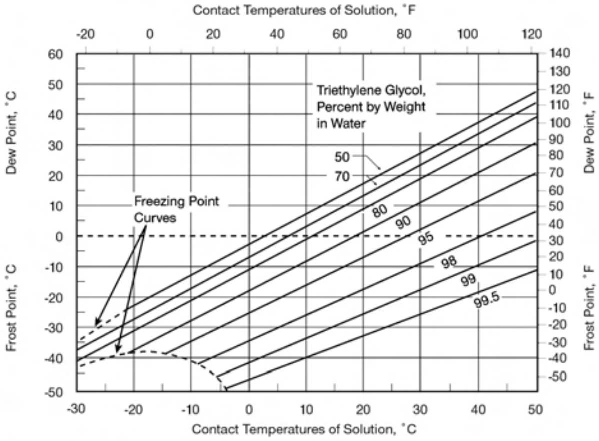

Dew or Frost Point = A + BT
T = Temperature, °C

TriEG, Wt%	*A*	*B*
50	-3.0308	1.01050
70	-7.0009	1.01610
80	-10.745	1.01160
90	-17.923	0.98187
95	-25.252	0.93019
98	-34.675	0.85598
99	-41.419	0.80150
99.5	-47.195	0.73263

Courtesy of The Dow Chemical Company. All rights reserved.

- At water salinity levels greater than approximately 17% NaCL, the polymer may come out of solution, thereby reducing KHI effectiveness.
- A solution of KHI in water does not provide protection from freezing or icing conditions, neither in the line being treated nor in the KHI storage tank. If ambient temperatures are expected to fall below freezing, the KHI storage volume must be freeze-protected through the use of insulation on the container and piping or addition of antifreeze (typically ethylene glycol) to the KHI solution.
- A solution of KHI cannot be used for melting ice or hydrate plugs. It is recommended to have other strategies, such as a small quantity of ethylene glycol or methanol for remediation purposes in the event of a blockage.
- The KHI delivery system must be capable of providing sufficient dosage to achieve a hold time greater than the water residence time in the piping. Factors to consider include:
  - — The design basis duration of hydrate forming conditions for an unplanned shut-in.
  - — The potential for water to pool in low sections of piping (e.g., turn-down hydraulics, flowline profile, pigging frequency, flowline interconnects that are not used continuously) and dead legs.
  - — The seasonal duration of the cold point temperature below hydrate temperature, if applicable.
- If the gas is undersaturated with respect to water, the water in the KHI solution will evaporate and leave a high viscosity fluid. This can be addressed by using a more

FIG. 20-56

Physical Properties of Selected Glycols and Methanol

	Ethylene Glycol	Diethylene Glycol	Triethylene Glycol	Tetraethylene Glycol	Methanol
Formula	$C_2H_6O_2$	$C_4H_{10}O_3$	$C_6H_{14}O_4$	$C_6H_{18}O_5$	CH_3OH
Molecular Weight	62.1	106.1	150.2	194.2	32.04
Boiling Point* at 760 mm Hg, °F	387.1	472.6	545.9	597.2	148.1
Boiling Point* at 760 mm Hg, °C	197.3	244.8	285.5	314	64.5
Vapor Pressure at 77°F (25°C) mm Hg	0.12	<0.01	<0.01	<0.01	120
Density					
(g/cc) at 77°F (25°C)	1.110	1.113	1.119	1.120	0.790
(g/cc) at 140°F (60°C)	1.085	1.088	1.092	1.092	
Pounds Per Gallon at 77°F (25°C)	9.26	9.29	9.34	9.34	6.59
Freezing Point, °F	8	17	19	22	–144.0
Pour Point, °F	—	–65	–73	–42	
Viscosity in centipoise					
at 77°F (25°C)	16.5	28.2	37.3	44.6	0.52
at 140°F (60°C)	4.68	6.99	8.77	10.2	
Surface Tension at 77°F (25°C), dynes/cm	47	44	45	45	22.5
Refractive Index at 77°F (25°C)	1.430	1.446	1.454	1.457	0.328
Specific Heat at 77 °F (25°C) Btu/(lb•°F)	0.58	0.55	0.53	0.52	0.60
Flash Point, °F (PMCC)	240	255	350	400	53.6
Fire Point, °F (C.O.C.)	245	290	330	375	

* Glycols decompose at temperatures below their atmospheric boiling point. Approximate decomposition temperatures are:

Ethylene Glycol 329°F Triethylene Glycol 404°F

dilute KHI solution, or by changing the KHI carrier fluid to ethylene glycol.

- The KHI and water from the KHI solution will form separate phases if the inhibited fluid is above the lower critical solution temperature (LCST) of the KHI solution.
- The KHI polymer suffers degradation effects at temperatures above 480°F.

Antiagglomerant Inhibitors — Antiagglomerants were developed out of the necessity to extend the range of subcooling for LDHIs beyond that of KHIs, and AAs can achieve subcooling of greater than 40°F. Unlike KHIs, which delay the formation of hydrates, AAs allow their formation at normal rates, but as small nonagglomerating hydrate crystals that are dispersed into an oil or condensate preventing the formation and accumulation of large hydrate crystals. Thus, AAs are suitable only in the presence of liquid hydrocarbon. The mechanism of dispersion is emulsification with the AAs acting as emulsification agents.

AAs Compared to Methanol or Glycols — The comparisons of AAs are similar for KHIs except AAs achieve greater subcooling.

AA Screening Considerations — Although AAs are applicable under most producing conditions, certain conditions must be considered when evaluating a potential application. These conditions include water salinity, emulsification and de-mulsification (i.e., separation), pipeline hydraulics, water cuts, material compatibility, water treating, and downstream impacts.

- Some AAs have a maximum salinity criterion that is normally not exceeded with produced water.
- Since AAs are based on dispersing (i.d., emulsifying) polar hydrate crystals in a nonpolar oil or condensate phase (i.e., continuous phase), they may sometimes require a de-emulsifier for oil and water separation. Further, the addition of a heater upstream or heat coil inside a separator may be required to melt the hydrate crystals.
- Since AAs form crystals that are then dispersed in the liquid hydrocarbon phase, careful consideration of the potential impact on viscosity should be considered including steady state flow, shut-in flow and restart conditions.
- An additional consideration for AAs is that the water cuts (i.e., percent water in the liquids) should be less than 50%. Higher water cuts can invert the emulsion (i.e., change the continuous liquid phase from liquid hydrocarbon to water) and make the AA ineffective.
- AAs can impact the performance of some metallurgy and elastomers, so impacts on existing hardware should be reviewed.

- AAs typically partition (i.e., disperse) to the liquid hydrocarbon phase, but low residuals can remain in the produced water, which can impact toxicity test results.
- Residual AA concentration in the hydrocarbon liquid phase could possibly impact downstream processes and should be considered in the context of overall contribution to a total feed-stream.

GAS DEHYDRATION

Glycol Dehydration Systems

In those situations where inhibition is not feasible or practical, dehydration must be used. Both liquid and solid desiccants may be used, but economics frequently favor liquid desiccant dehydration when it will meet the required dehydration specification.

Liquid desiccant dehydration equipment is simple to operate and maintain. It can easily be automated for unattended operation; for example, glycol dehydration at a remote production well. Liquid desiccants can be used for sour gases, but additional precautions in the design are needed due to the solubility of the acid gases in the desiccant solution. At very high acid gas content and relatively higher pressures the glycols can also be "soluble" in the gas.

Glycols are typically used for applications where dew point depressions of the order of 60° to 120°F are required. Diethylene glycol (DEG), triethylene glycol (TEG), and tetraethylene glycol (TREG) are used as liquid desiccants, but TEG is the most common for natural gas dehydration.

Good practice dictates installing an inlet gas scrubber, even if the dehydrator is near a production separator. The inlet gas scrubber will prevent accidental dumping of large quantities of water (fresh or salty), hydrocarbons, treating chemicals or corrosion inhibitors into the glycol contactor. Even small quantities of these materials can result in excessive glycol losses due to foaming, reduced efficiency, and increased maintenance. Integral separators at the bottom of the contactor are common.

Following the process flow in Fig. 20-67, the regenerated glycol is pumped to the top tray of the contactor (absorber). The glycol absorbs water as it flows down through the contactor countercurrent to the gas flow. Water-rich glycol is removed from the bottom of the contactor, passes through the reflux condenser coil, flashes off most of the soluble gas in the flash tank, and flows through the rich-lean heat exchanger to the regenerator. In the regenerator, absorbed water is distilled from the glycol at near atmospheric pressure by application of heat. The regenerated lean glycol exits the surge drum, is partly cooled in the lean-rich exchanger and is pumped through the glycol cooler before being recirculated to the contactor.

Evaluation of a TEG system involves first establishing the minimum TEG concentration required to meet the outlet gas water dewpoint specification. Fig. 20-68 shows the water dewpoint of a natural gas stream in equilibrium with a TEG solution at various temperatures and TEG concentrations. Fig. 20-68 can be used to estimate the required TEG concentration for a particular application or the theoretical dewpoint depression for a given TEG concentration and contactor temperature. Actual outlet dewpoints depend on the TEG circulation rate and number of equilibrium stages, but typical approaches to equilibrium are 10-20°F. Equilibrium dewpoints are relatively

FIG. 20-57

Typical Glycol Injection System

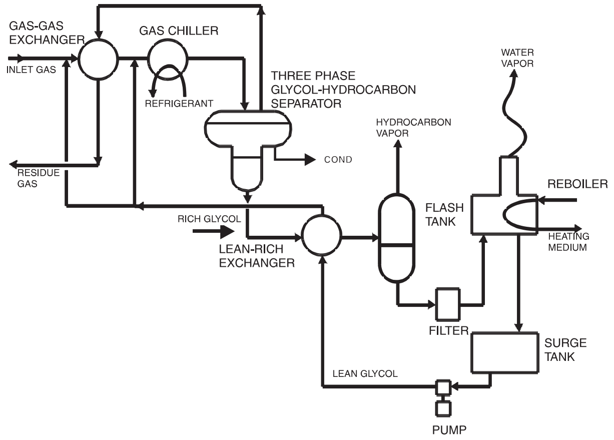

FIG. 20-58

Freezing Points of Aqueous Glycol Solutions

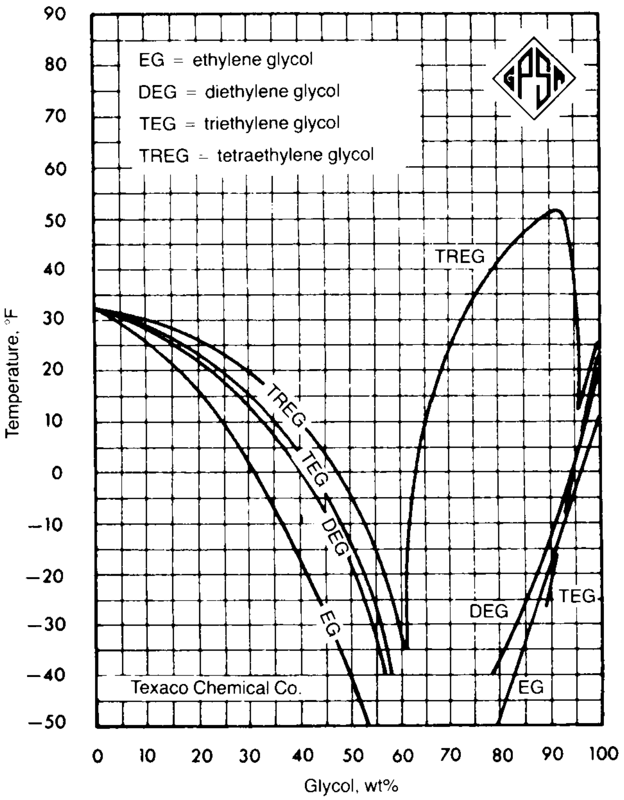

insensitive to pressure and Fig. 20-68 may be used up to 1500 psia with little error.

Fig. 20-68 combines the results published by Parrish, et al.[35] covering TEG purity up to 99.99 weight percent and those reported by Bucklin and Won in 1987[52] covering TEG purity up to 99.999 weight percent. Several equilibrium correlations[36,37,38,39,40,52] have been presented since 1950. Previous editions of the GPSA data book presented an equilibrium correlation based on the work of Worley[38]. In general, the correlations of Worley,[38] Rosman[39] and Parrish[35] agree reasonably well and are adequate for most TEG system designs. All are limited by the ability to measure accurately the equilibrium concentration of water in the vapor phase above TEG solutions. The Parrish et al. and Won correlation has been included in this edition because equilibrium water concentrations in the vapor phase were determined at infinite dilution (essentially 100% TEG). The other correlations use extrapolations of data at lower concentrations to estimate equilibrium in the infinite dilution region.

Please note that the equilibrium water dewpoints on the ordinate of Fig. 20-68 are based on the assumption the condensed water phase is a metastable liquid. At low dewpoints the true condensed phase will be a hydrate. The equilibrium dewpoint temperature above a hydrate is higher than that above a metastable liquid. Therefore, Fig. 20-68 predicts dewpoints which are colder than those which can actually be achieved. The difference is a function of temperature, pressure and gas composition but can be as much as 15-20°F (see Fig. 20-17). When dehydrating to very low dewpoints, such as those required upstream of a refrigeration process, the TEG concentration must be sufficient to dry the gas to the hydrate dewpoint.

Once the lean TEG concentration has been established, the TEG circulation rate and number of trays (height of packing) must be determined. Most economical designs employ circulation rates of about 2-5 gal. TEG/lb H_2O absorbed. The relationship between circulation rate and number of equilibrium stages employs the absorption calculation techniques set out in Chapter 19. This has been done for TEG systems with the results presented in Figs. 20-69 through 20-74.

The graphs in these figures apply only if the feed gas is water saturated. They are based on feed-gas and therefore contactor temperatures of 80°F, but are essentially independent of temperature. Although the K values in the absorption factors (i.e., L/VK) do increase with temperature, the required TEG rates also increase, and this tends to compensate for the increasing K values and keep the absorption factors fairly constant.

Conversion from equilibrium stages to actual trays can be made assuming an overall tray efficiency of 25-30%. For random and structured packing, Height of Packing Equivalent to a Theoretical Plate (HETP) varies with TEG circulation rate, gas rate, gas density, and packing characteristics but a value of about 60 inches is usually adequate for planning purposes. When the gas density exceeds about 6 lb/ft^3 (generally at very high pressures), the above conversions may not provide sufficient packing height and number of trays. Also when the contactor temperature is less than about 60°F, the increased viscosity of the TEG can reduce mass transfer efficiency, and temperatures in this range should be avoided.

Typical tray spacing in TEG contactors is 24 inches. Therefore, the total height of the contactor column will be based on the number of trays or packing required plus an additional 6-10 ft to allow space for vapor disengagement above the top tray, inlet gas distribution below the bottom tray, and rich glycol surge volume at the bottom of the column. Bubble cap trays have historically been used in glycol contactors due to the low liquid rates versus gas flow, but structured packing is widely used. Generally, structured packing allows a significantly smaller contactor diameter and a slightly smaller contactor height. In 1991, ARCO published a report on its testing and application of structured packing to TEG dehydration.[53]

Contactor diameter is set by the gas velocity. Sizing is identical to that outlined for separators in Section 7. Recommended values for K-factors and C-factors are shown in Fig. 20-75.

Structured packing vendors frequently quote an F_s value for sizing glycol contactors, where F_s is defined in Eq 20-9.

$$F_s = v\sqrt{\rho_v} \qquad \textbf{Eq 20-9}$$

Values of F_s = 2.5 to 3.0 will generally provide a good estimate of contactor diameter for structured packing.

FIG. 20-59

Hydrate Temperature Depression vs. Methanol Concentration

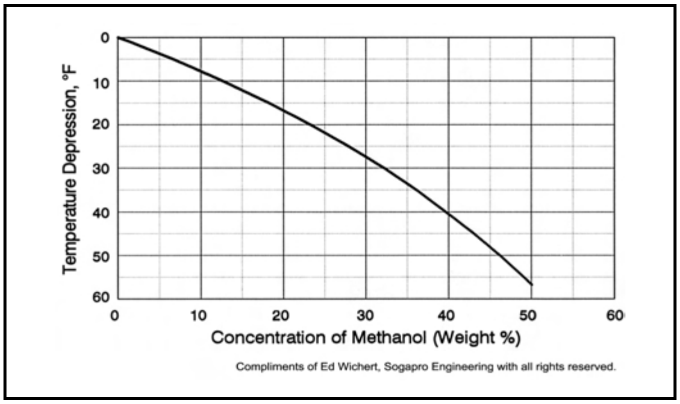

Compliments of Ed Wichert, Sogapro Engineering with all rights reserved.

FIG. 20-60

Hydrate Inhibition with Ethylene Glycol: Hammerschmidt vs. Experimental Data[28]

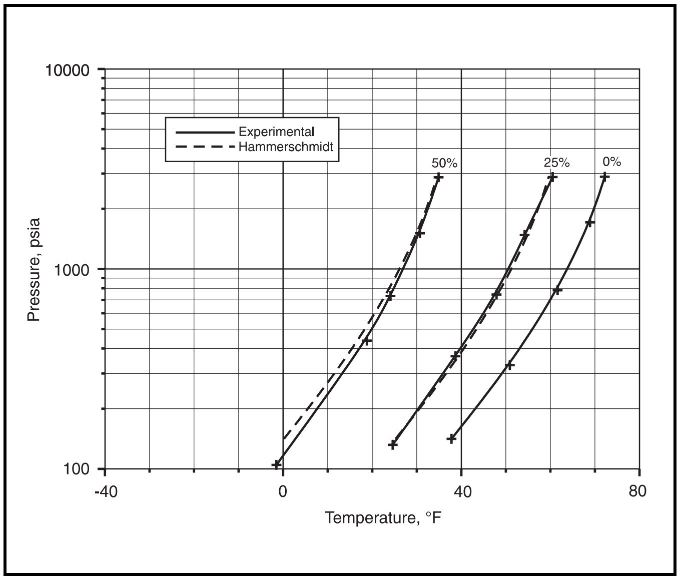

Example 20-11—30 MMscf/d of a 0.65 sp gr natural gas enters a TEG contactor at 600 psia and 100°F. Outlet water content specification is 7 lb H_2O/MMscf and the TEG circulation rate is 3 gal TEG/lb H_2O. Estimate the contactor diameter and number of bubble cap trays or height of structured packing required to meet this requirement. Assume z = 0.92.

Solutions Steps:

1. Estimate required TEG concentration from Fig. 20-68

   H_2O Dewpoint = 24°F, which from Fig. 20-4 is equivalent to a water content of 7 lb H_2O/MMscf @ 600 psia)

   Assume a 10°F approach to equilibrium

   @ T = 100°F, lean TEG concentration ≈ 98.8 wt%

2. Estimate number of theoretical stages.

   Calculate water removal efficiency

$$\frac{W_{in} - W_{out}}{W_{in}} = \frac{90 - 7}{90} = 0.922$$

From Fig. 20-70 (N = 1.5) at 3 gallon TEG/lb H_2O and 99.0 wt% TEG

$$(W_{in} - W_{out})/W_{in} = 0.885$$

From Fig. 20-71 (N = 2.0) at 3 gallon TEG/lb H_2O and 99.0 wt% TEG

$$(W_{in} - W_{out})/W_{in} = 0.925$$

use N = 2.0

2 theoretical stages ≅ 8 bubble cap trays @ 24 inch tray spacing

FIG. 20-61

Hydrate Inhibition with Methanol: Hammerschmidt vs. Experimental Data[28]

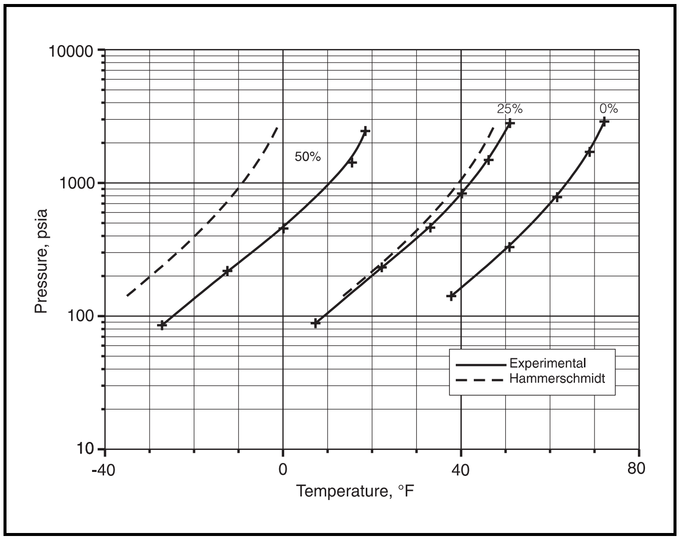

FIG. 20-62

Hydrate Inhibition with Methanol: Nielsen & Bucklin vs. Experimental Data[28]

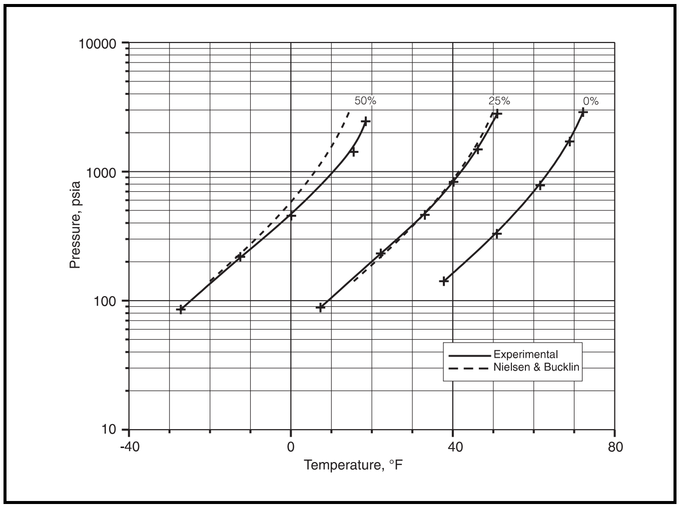

FIG. 20-63

Hydrate Inhibition with Methanol: Nielsen & Bucklin[26] vs. Experimental Data[28]

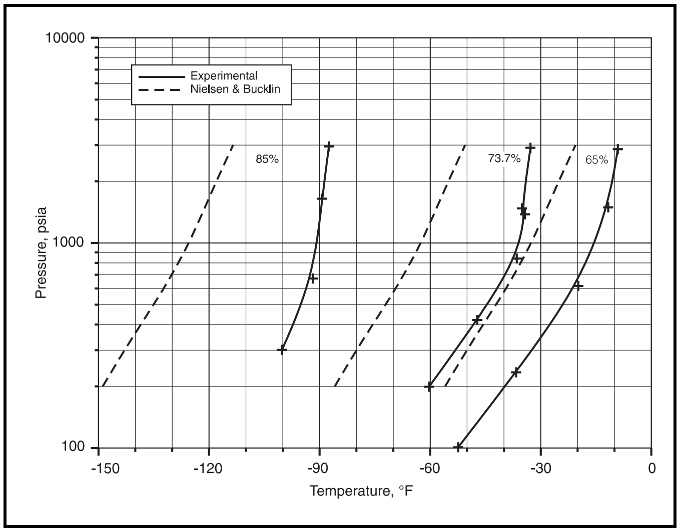

FIG. 20-64

Hydrate Inhibition with Methanol: Maddox et al.[27] vs. Experimental Data[28]

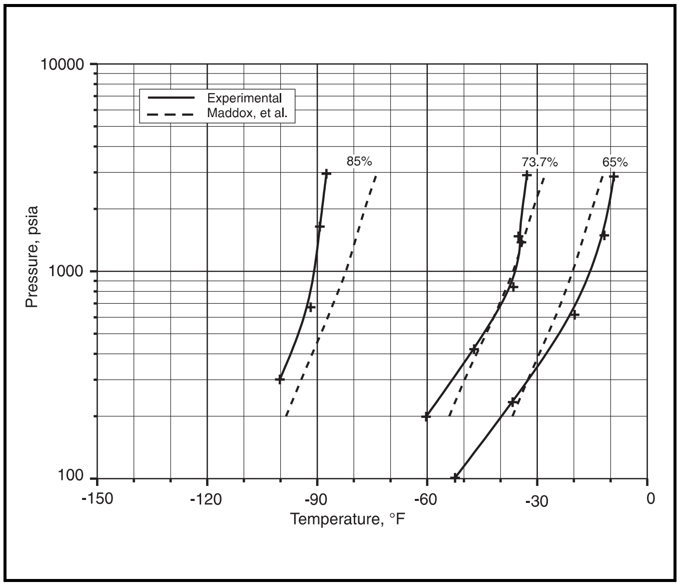

2 theoretical stages ≅ 10 ft of structured packing

3. Size the contactor
   Bubble caps, 24 inch tray spacing:
   From Section 7

$$G = C\,[\rho_v(\rho_L - \rho_v)]^{0.5}$$

$$= 576\,[2.0(69.9 - 2.0)]^{0.5} = 6712 \text{ lb / ft}^2 \bullet \text{hr}$$

$$\dot{m} = \left(\frac{30\ 000\ 000 \text{ scf}}{\text{d}}\right)\left(\frac{1 \text{ lb} \bullet \text{mol}}{379.5 \text{ scf}}\right)$$

$$\left(\frac{(0.65)(28.97) \text{ lb}}{\text{lb} \bullet \text{mol}}\right)\left(\frac{1 \text{ d}}{24 \text{ hr}}\right) = 62\ 000 \text{ lb hr}$$

$$A = \frac{\dot{m}}{G} = \frac{62\ 000}{6712} = 9.2 \text{ ft}^2$$

$$D = \left(\frac{4\,A}{\pi}\right)^{0.5} = \left(\frac{(4)(9.2)}{3.14}\right)^{0.5} = 3.4 \text{ ft}$$

For Structured packing:

$$D = \left(\frac{C_{\text{Bubble cap}}}{C_{\text{Structured packing}}}\right)^{0.5} (D_{\text{Bubble cap}})$$

$$= \left(\frac{576}{1200}\right)^{0.5} (3.4) = 2.4 \text{ ft}$$

TEG will typically absorb about 1 scf of sweet natural gas per gallon of glycol at 1000 psia and 100°F. Solubilities will be considerably higher if the gas contains significant amounts of CO_2 and H_2S.

The solubilities of pure H_2S and CO_2 in pure TEG are given in Fig. 20-76. These charts apply to pure TEG or to the lean TEG, which is essentially pure. For the rich-TEG solution leaving the bottom of a contactor, it is approximately correct to apply them to the TEG portion.

Heavier paraffin hydrocarbons are essentially insoluble in TEG. Aromatic hydrocarbons, however, are very soluble in TEG, and significant amounts of aromatic hydrocarbons may be absorbed in the TEG at contactor conditions. This may present an environmental or safety hazard when they are discharged from the top of the regenerator.

Vapor-liquid equilibrium constants (K-values) for benzene, toluene, ethylbenzene, and o-xylene in TEG solutions are presented in RR-131.[43] This data indicates that at typical contactor conditions approximately 10-30% of the aromatics in the gas stream may be absorbed in the TEG solution. Based on the data in RR-131 at 1000 psia, 100°F and a TEG circulation rate of 3 gal TEG/lb H_2O absorbed, the approximate percentage absorption of aromatics from the gas into the rich TEG are calculated as:

Benzene	10%
Toluene	14%
Ethylbenzene	19%
O-xylene	28%

Aromatic absorption increases with increasing pressure and decreasing temperature. Aromatic absorption is directly related to TEG circulation rate. Higher circulation rates result in increased absorption. Aromatic absorption is essentially independent of the number of contacts in the absorber so one method of minimizing aromatic absorption is to use taller contactors and minimize TEG circulation rates.

Most of the aromatic components will be stripped from the TEG solution in the regenerator.

Flash tank sizing should be sufficient to degas the glycol solution and skim entrained liquid hydrocarbons, if necessary. A minimum retention time of 3-5 minutes is required for degassing. If liquid hydrocarbons are to be removed as well, retention times of 20-30 minutes may be required for adequate separation. Flash tank pressures are typically less than 75 psia.

Regenerator sizing requires establishing the reboiler duty and, when high TEG concentrations are required, providing sufficient stripping gas.

FIG. 20-65

Ratio of Methanol Vapor Composition to Methanol Liquid Composition

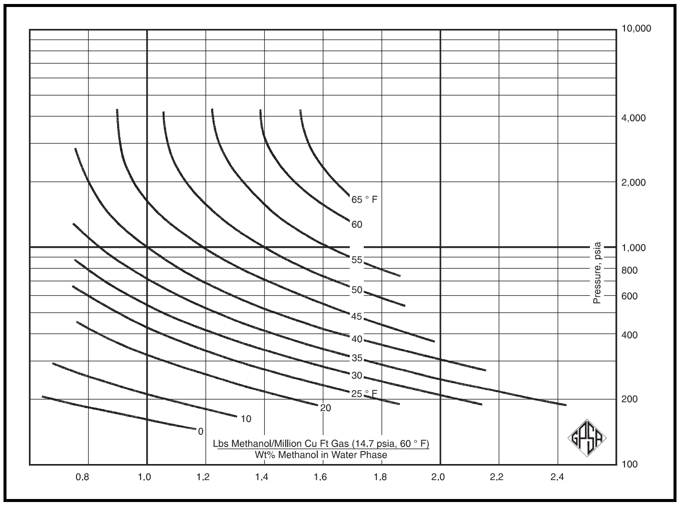

FIG. 20-66

Solubility of Methanol in Paraffinic Hydrocarbons[32, 33,34] vs. Temperature at Various Methanol Concentrations

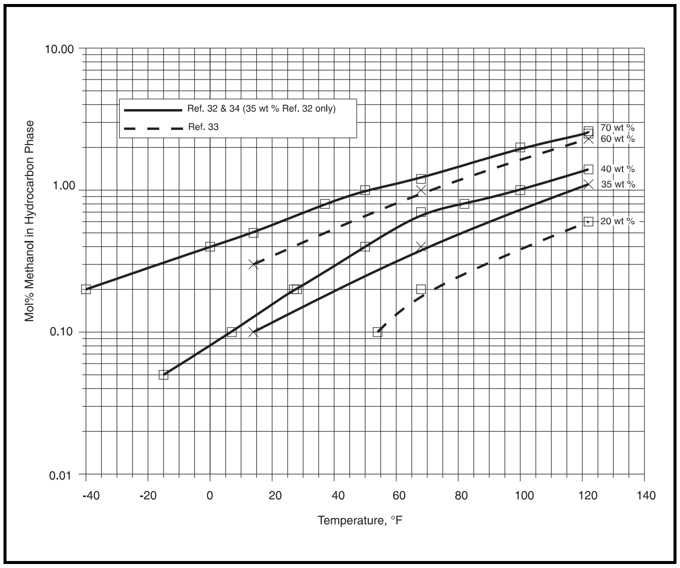

FIG. 20-67

Example Process Flow Diagram for Glycol Dehydration Unit

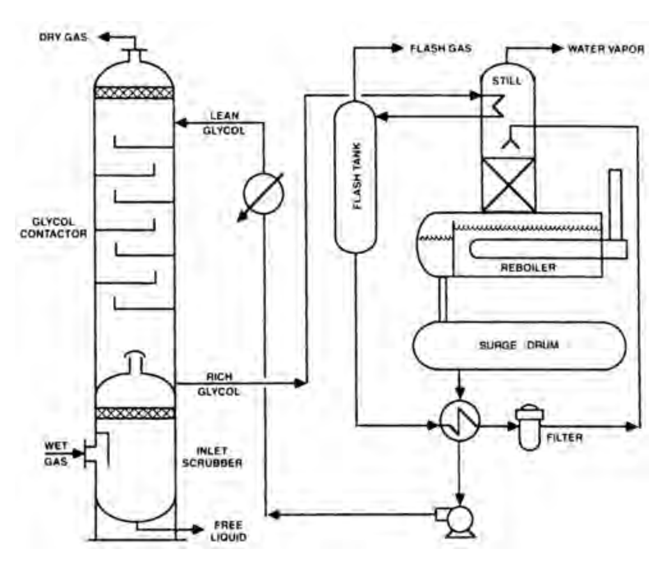

FIG. 20-68

Equilibrium H_2O Dewpoint vs. Temperature at Various TEG Concentrations

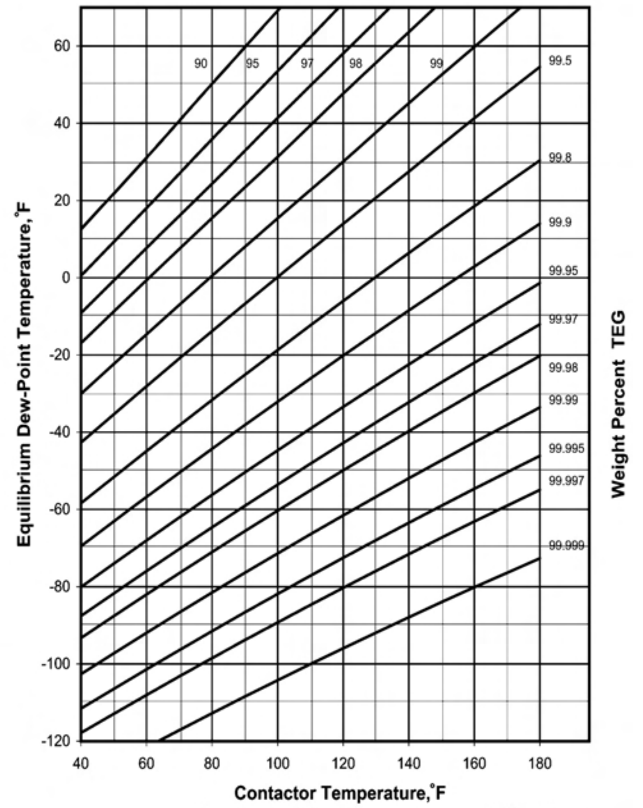

Compliments of Fluor Enterprises Inc. with all rights reserved.

A quick estimate of reboiler duty can be made using Eq 20-10.

$$Q = (1500)(L_g) \qquad \textbf{Eq 20-10}$$

Eq 20-10 is approximate and usually gives values which are higher than the actual duty. A more rigorous determination of reboiler duty is shown in Example 20-12.

Example 20-12 — Determine reboiler duty for conditions in the previous example. Assume the rich TEG temperature entering the regenerator is 300°F and the reboiler temperature is 400°F.

Glycol Reboiler Duty: Basis 1 gal. TEG

Sensible Heat:

$$Q_s = m\, C_p\, \Delta t$$

$$= \frac{(9.3 \text{ lb})}{\text{gal.}} \left(\frac{0.665 \text{ Btu}}{\text{lb} \bullet {}^\circ\text{F}}\right)(400^\circ\text{F} - 300^\circ\text{F})$$

$$= 618 \text{ Btu /gal.}$$

Vaporization of Absorbed H_2O:

$$Q_v = (\Delta H_{vap})\,(\Delta W)$$

$$= \left(\frac{970 \text{ Btu}}{\text{lb } H_2O}\right)\left(\frac{1 \text{ lb } H_2O}{3 \text{ gal. TEG}}\right)$$

$$= 323 \text{ Btu /gal.}$$

Condenser Duty @ 25% Reflux Ratio:

$$Q_c = (0.25)\,(Q_v) = 81 \text{ Btu /gal.}$$

Total Duty Including 10% Heat Loss:

$$Q_r = (618 + 323 + 81)\,(1.1) = 1124 \text{ Btu /gal.}$$

Total Duty Based on 30 MMscfd of Gas:

$$Q = (1124 \text{ Btu/gal})\,(3 \text{ gal./lb})\,(30 \text{ MMscfd/24})\,((90\text{-}7) \text{ lb/MMscf}) = 350{,}000 \text{ Btu/hr}$$

Boiling of TEG at 400°F and 1 atmosphere will provide about 98.6 wt% glycol. Regeneration at higher altitude will result in higher concentrations at 400°F or a reduced regeneration temperature at the same concentration.

ENHANCED GLYCOL CONCENTRATION PROCESSES

There are several principles and processes for obtaining higher TEG purity than 98.6 wt%, which is the TEG purity obtained by reboiling at 400°F and atmospheric pressure. All methods are based on the principle of reducing the effective partial pressure of H_2O in the vapor space of the glycol reboiler, and hence obtaining a higher glycol concentration at the same temperature.

The most common method for enhancement of the glycol concentration has been by use of stripping gas or by means of vacuum in the reboiler.

Other patented or proprietary processes in use to enhance the glycol purity and thereby achieve a more stringent water dew point depression are as described below based on information from the licensors.

The processes are illustrated on Fig. 20-77.

DRIZO®

DRIZO® achieves glycol enrichment by means of its own internally generated stripping medium, a mixture of paraffinic and aromatic (BTEX) hydrocarbons of a C_5+ boiling range, which are absorbed by the glycol. The heavy hydrocarbons and water are condensed from the regenerator overhead while the non-condensables discharge to atmosphere essentially free of BTEX. The condensed hydrocarbons (with BTEX) are separated from the water, are vaporized and superheated, and flow to the lean-glycol stripping column to serve as the stripping medium, which results in TEG purities higher than 99.99 weight percent. As the liquid hydrocarbons build up, they are drawn off as an NGL product. Various options to further enhance the lean TEG purity are available, such as drying the hydrocarbon liquid solvent with solid desiccant, which achieves TEG purities as high as 99.999 weight percent. It is claimed that this high TEG purity level permits water dewpoint depressions in the range of 250°F.

COLDFINGER®

The COLDFINGER® process can be described as a trace-water exhauster for liquids, either hydrophilic (as with glycols) or hydrophobic (as with propane, butanes, etc.). With triethylene glycol (TEG), it is most effective at 400°F and corresponding water concentrations where the equilibrium vapor is water rich at approximately 40 to 45% by weight TEG and 55 to 60% water; and the water concentration of the liquid feed (lean TEG) is one and one-half percent (1-1/2%) or less. With the surge tank half full of hot-lean TEG, a condensing tube bundle ("cold finger") inserted in the surge tank's vapor space continuously condenses equilibrium vapor and discharges the condensate through a trough placed under the tube bundle. The liquid phase (lean TEG) seeks to restore the equilibrium vapor and in doing so, exhausts its trace water before it reaches the COLDFINGER® surge-tank outlet nozzle. With a limited residence time, the water in the liquid phase is exhausted, and the residual liquid (lean TEG) approaches better than 99.7% by weight TEG concentration. In the most common applications, dilute glycol (rich TEG) from the glycol contactor is used as the coolant in the COLDFINGER® tube bundle. The COLDFINGER® process does not use stripping gas.

FIG. 20-69

Water Removal vs. TEG Circulation Rate at Various TEG Concentrations (N = 1.0)

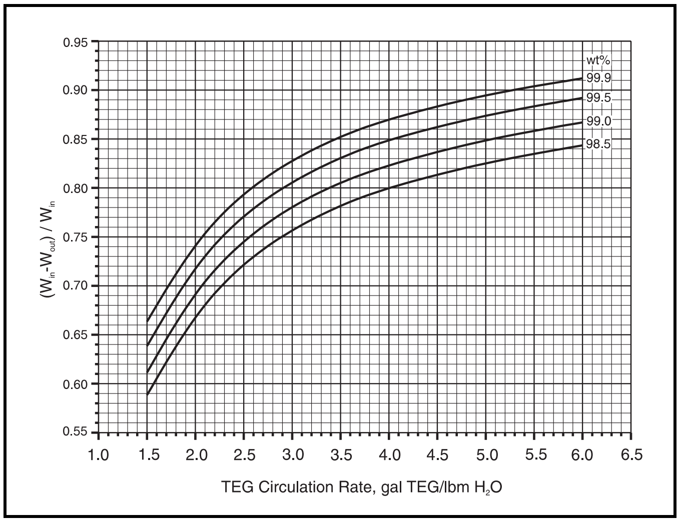

OTHER CONSIDERATIONS

Under conventional dehydration conditions, 40 to 60% of methanol in the feed gas to a glycol dehydrator will be absorbed by the TEG[44]. This will add additional heat duty on the reboiler and additional vapor load on the regenerator. High methanol injection rates and slug carryover can cause flooding.

Glycol losses can be defined as mechanical carryover from the contactor (normally 0.10 gallon/MMscf for standard mist eliminator) plus vaporization from the contactor and regenerator and spillage. Glycol losses, exclusive of spillage, range from 0.05 gallon/MMscf for high pressure low-temperature gases to as much as 0.30 gal/MMscf for low pressure, high temperature gases. Excessive losses usually result from foaming in the absorber and/or regenerator. Anti-foam agents are sometimes used.

FIG. 20-70

Water Removal vs. TEG Circulation Rate at Various TEG Concentrations (N = 1.5)

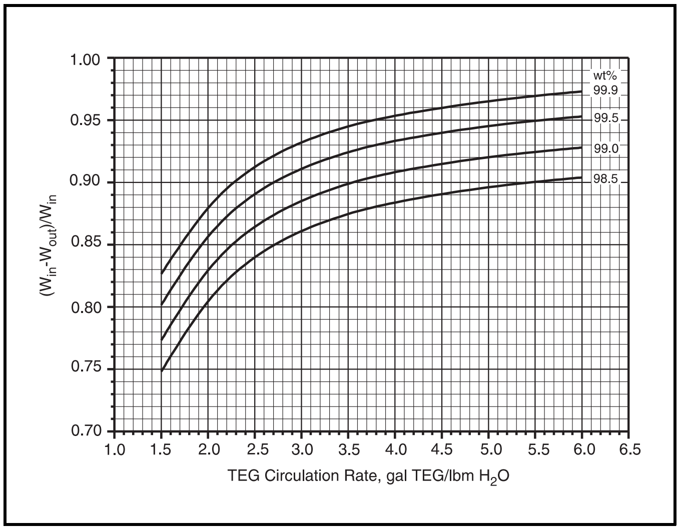

FIG. 20-71

Water Removal vs. TEG Circulation Rate at Various TEG Concentrations (N = 2.0)

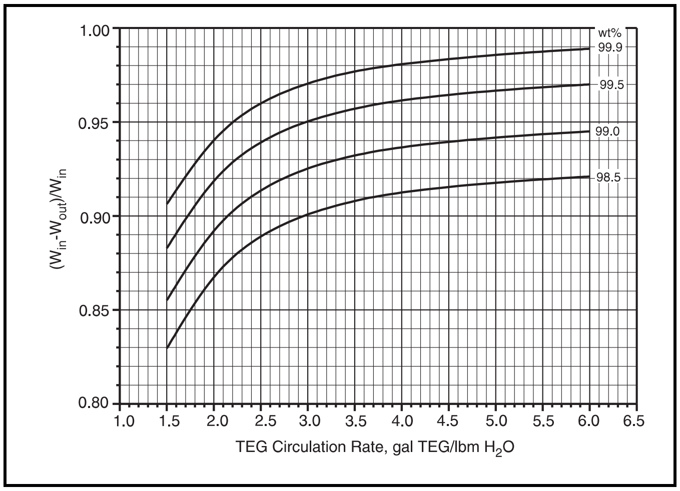

TEG vaporization losses at the contactor are minimal unless the gas temperature exceeds about 120°F. These losses are more significant at lower pressures. Tetraethylene glycol (TREG) has been used in some cases to minimize losses in high temperature, low pressure systems. Vaporization losses at the regenerator typically result from excessive stripping gas rates and/or inadequate reflux.

Glycol losses in CO_2 dehydration systems can be significantly higher than in natural gas systems particularly at pressures above about 900 psia. This is due to the solubility of TEG in dense phase CO_2. Glycerol[45] is much less soluble and has been used successfully as a desiccant in some CO_2 dehydration systems.

Glycol becomes corrosive with prolonged exposure to oxygen. A dry gas blanket on the glycol surge tank will help eliminate oxygen absorption. Special precautions should be taken if oxygen is in the gas to be dehydrated. Thermal decomposition of TEG can become a problem if TEG is heated to temperatures above 400°F.

FIG. 20-72

Water Removal vs. TEG Circulation Rate at Various TEG Concentrations (N = 2.5)

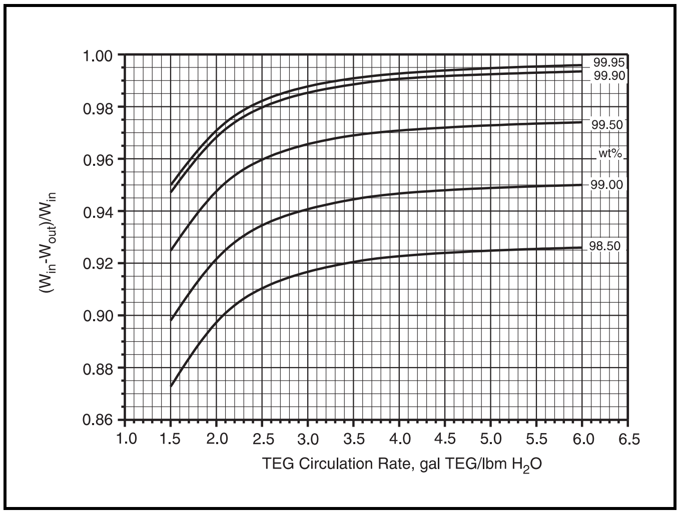

FIG. 20-73

Water Removal vs. TEG Circulation Rate at Various TEG Concentrations (N = 3.0)

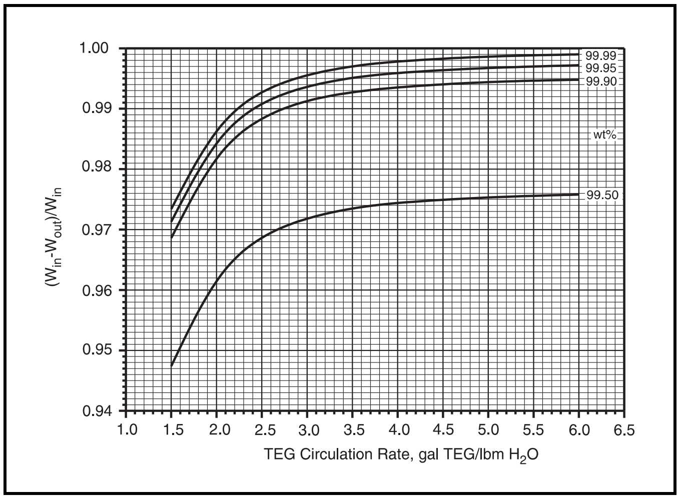

A low pH accelerates decomposition of glycols. Bases such as triethanolamine, borax, or sodium mercaptobenzothiazole may be added to maintain pH, but they should be added sparingly.

SOLID DESICCANT DEHYDRATION

There are several solid desiccants which possess the physical characteristic to adsorb water from natural gas. These desiccants generally are used in dehydration systems consisting of two or more towers and associated regeneration equipment. See Fig. 20-80 for a simple two-tower system. One tower is onstream adsorbing water from the gas while the other tower is being regenerated and cooled. Hot gas is used to drive off the adsorbed water from the desiccant, after which the tower is cooled with an unheated gas stream. The towers are switched before the on-stream tower becomes water saturated. In this configuration, part of the dried gas is used for regeneration and cooling, and is recycled to the inlet separator. Other streams may be used if they are dry enough, such as part of the residue gas.

Solid desiccant units generally cost more to buy and operate than glycol units. Therefore, their use is typically limited to applications such as high H_2S content gases, very low water dewpoint requirements, simultaneous control of water and hydrocarbon dewpoints, and special cases such as oxygen containing gases, etc. In processes where cryogenic temperatures are encountered, solid desiccant dehydration usually is preferred over conventional methanol injection to prevent hydrate and ice formation. Solid desiccants are also often used for the drying and sweetening of NGL liquids.

Desiccants in common commercial use fall into one of three categories:

Gels – alumina or silica gels manufactured and conditioned to have an affinity for water.

Alumina – a manufactured or natural occurring form of aluminum oxide that is activated by heating.

Molecular Sieves – manufactured or naturally occurring aluminosilicates exhibiting a degree of selectivity based on crystalline structure in their adsorption of natural gas constituents.

Silica Gel is a generic name for a gel manufactured from sulfuric acid and sodium silicate. It is essentially pure silicon dioxide, SiO_2. It is used for gas and liquid dehydration and hydrocarbon (iC_5+) recovery from natural gas. When used for hydrocarbon removal, the units are often called HRUs (Hydrocarbon Recovery Units) or SCUs (Short Cycle Units). When used for dehydration, silica gel will give outlet dewpoints of approximately –60°F.

Alumina is a hydrated form of alumina oxide (Al_2O_3). It is used for gas and liquid dehydration and will give outlet dewpoints of about –90°F. Less heat is required to regenerate alumina and silica gel than for molecular sieve, and the regeneration temperature is lower. Molecular sieves give lower outlet water dewpoints.

Molecular sieves are a class of aluminosilicates. They produce the lowest water dewpoints, and can be used to simultaneously sweeten and dry gases and liquids. Their equilibrium water capacity is much less dependent on adsorption temperature and relative humidity. They are usually more expensive.

Molecular sieve dehydrators are commonly used ahead of NGL recovery plants designed to recover ethane. These plants operate at very cold temperatures and require very dry feed gas to prevent formation of hydrates. Dehydration to a –150°F dewpoint is possible with molecular sieves. Water dewpoints less than –150°F can be accomplished with special design and strict operating parameters.

Fig. 20-81 presents the important properties of commercial solid desiccants. Fig. 20-82[46] shows static equilibrium capacity vs. relative humidity for various new desiccants. This is for comparison only. Adsorption capacity depends on other parameters besides relative humidity, and design values should be obtained from desiccant suppliers. Figure 20-83 shows water-adsorption isotherms for 4A molecular sieve in contact with air. This gives the relationship of static-equilibrium water capacity to the operating temperature and gas dewpoint temperature. Although the chart is based on an air-water system, it also can be used for natural gas.

FIG. 20-74

Water Removal vs. TEG Circulation Rate at Various TEG Concentrations (N = 4.0)

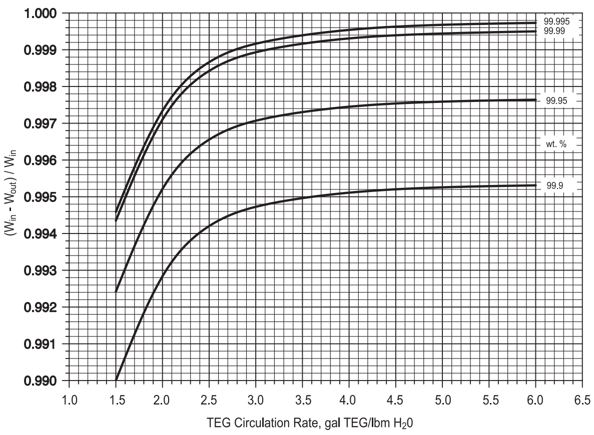

FIG. 20-75

Recommended Sizing Parameters for TEG Contactors

	K factor, ft/sec	**C factor, ft/hr**
Bubble Cap Trays		
20 inch spacing	0.14	504
24 inch spacing	0.16	576
30 inch spacing	0.17	612
Packing		
Structured	0.3 to 0.4*	1080-1440*
Random		
1 inch Pall rings	0.13 to 0.18	468-648
2 inch Pall rings	0.19 to 0.26	684-936
* Depending on packing density and vendor		

The continuous process requires two (or more) vessels with one on-line removing water while the other is being regenerated. Generally a bed is designed to be on-line in adsorption for 8 to 24 hours. When the bed is taken off-line, the water is removed by heating to 375°F-600°F, depending on the desiccant used and the performance specification (i.e., 375°F for silica gel and up to 600°F for molecular sieve, with alumina gel and activated alumina falling in between). The regeneration gas used to heat the bed is usually a slipstream of dry process gas. The regeneration gas is returned to the process after it has been cooled and the free water removed. Any heat source can be used including waste heat from engines and turbines. This is an important design consideration since heat is often a major operating cost.

Gas flow during adsorption is typically downflow. This allows higher gas velocities (thus smaller diameter towers) since bed fluidization is avoided. Regeneration gas flow is upflow during the heating period. In this way, any residual water left on the desiccant will be at the top of the bed and will not affect the effluent dewpoint when adsorption is resumed. In addition, upflow heating helps to strip any contaminants from the top of the bed extending desiccant life. Regeneration gas flow during the cooling period may be upflow if the gas is completely free of water, which saves two switching valves per tower. If the cooling gas contains water, cooling flow should be downflow to avoid preloading of the desiccant at the bottom of the bed with water.

Design

The first step is to determine the bed diameter, which depends on the superficial velocity. Too large a diameter will require a high regeneration gas rate to prevent channeling. Too small a diameter will cause too high a pressure drop and damage the sieve. The pressure drop is determined by a modified Ergun[47] equation, which relates pressure drop to superficial velocity as follows:

$$\frac{\Delta P}{L} = B\,\mu V + C \rho V^2 \qquad \textbf{Eq 20-11}$$

Constants for Eq 20-11 are:

Particle Type	B	C
1/8" bead (4x8 mesh)	0.0560	0.0000889
1/8" extrudate	0.0722	0.000124
1/16" bead (8x12 mesh)	0.152	0.000136
1/16" extrudate	0.238	0.000210

Fig. 20-87 was derived from Eq 20-11 by assuming a gas composition and temperature and setting the maximum allowable ΔP/L equal to 0.33 psi/ft. The design pressure drop through the bed should be about 5 psi. A design pressure drop higher than 8 psi is not recommended as the desiccant is fragile and can be crushed by the total bed weight and pressure drop forces. Remember to check the pressure drop after the bed height has been determined. Once the allowable superficial velocity is estimated, calculate the bed minimum diameter (i.e., $D_{minimum}$), and select the nearest standard diameter (i.e. $D_{selected}$):

$$D_{minimum} = \left(\frac{4q}{\pi\, V_{max}}\right)^{0.5} \qquad \textbf{Eq 20-12}$$

$$q = \frac{\dot{m}}{60\rho} \quad \textbf{Eq 20-13}$$

Obtain the corresponding superficial velocity, $V_{adjusted}$ as follows:

$$V_{adjusted} = V_{max}\left(\frac{D_{minimum}}{D_{selected}}\right)^2 \quad \textbf{Eq 20-14}$$

An alternative and more exact method to using Fig. 20-11 is to calculate the maximum superficial velocity by solving Eq 20-11 algebraically, which gives Eq 20-15 below. The second term inside the square root of Eq 20-15 may be deleted since its value is insignificant compared to the first term, which gives Eq 20-16

$$V_{max} = \{(\Delta P/L)_{max}/(C\rho) + [(B/C)(\mu/\rho)/2]^2\}^{1/2} - [(B/C)(\mu/\rho)/2] \quad \textbf{Eq 20-15}$$

$$V_{max} = \{(\Delta P/L)_{max}/(C\rho)\}^{1/2} - [(B/C)(\mu/\rho)/2] \quad \textbf{Eq 20-16}$$

The value of $(\Delta P/L)_{max}$ in these equations depends on the sieve type, size, and shape, but a typical value for design is 0.33 psi/ft.

The next step is to choose an adsorption period and calculate the mass of desiccant required. Eight to twelve hour adsorption periods are common. Periods of greater than 12 hours may be justified especially if the feed gas is not water saturated. Long adsorption periods mean less regenerations and longer sieve life, but larger beds and additional capital investment.

FIG. 20-76

Solubility of H_2S and CO_2 in Triethylene Glycol vs. Temperature and Partial Pressure

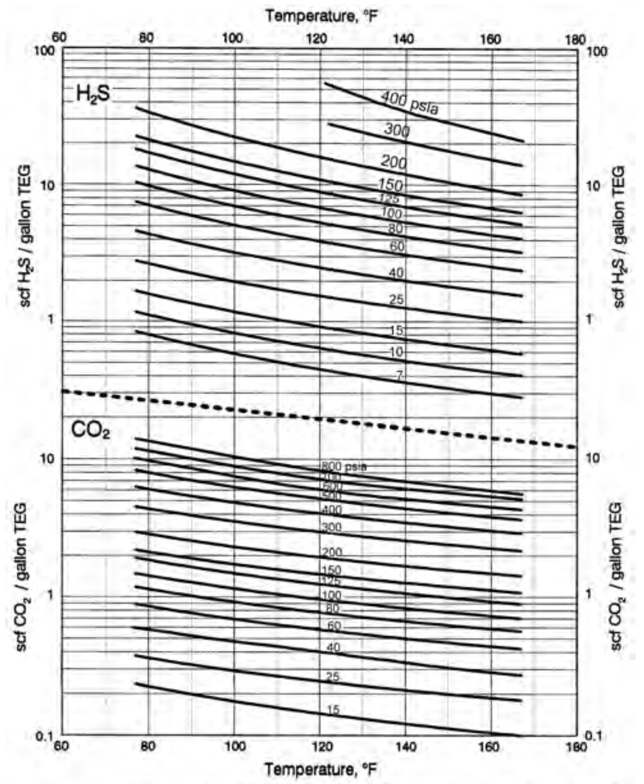

Compliments of Ed Wichert, Sogapro Engineering with all rights reserved.

During the adsorption period, the bed can be thought of as operating with three zones. The top zone is called the saturation or equilibrium zone. The desiccant in this zone is in equilibrium with the wet inlet gas. The middle or mass transfer zone (MTZ) is where the water content of the gas is reduced from its inlet concentration to < 1 ppm. The bottom zone is unused desiccant and is often called the active zone. If the bed operates too long in adsorption, the mass transfer zone begins to move out the bottom of the bed causing a "breakthrough." At breakthrough, the water content of the outlet gas begins to increase and will eventually reach feed gas water content when the MTZ is completely displaced.

Both water capacity and the rate at which solid desiccants adsorb water decline as the material ages. The object of the design is to install enough desiccant such that after three to five years, the mass transfer zone will be at the bottom of the bed at the end of the adsorption period.

In the saturation zone, molecular sieve is expected to hold approximately 13 pounds of water per 100 pounds of sieve. New sieve will have an equilibrium capacity near 20%; 13% represents the approximate capacity of a 3-5 year old sieve. This capacity needs to be adjusted when the gas is not water saturated or the temperature is above 75°F. See Fig. 20-84 and 20-85 to find the correction factors for molecular sieve. To determine the mass of desiccant required in the saturation zone, calculate the amount of water to be removed during the cycle and divide by the effective capacity.

$$S_S = \frac{W_r}{(0.13)(C_{SS})(C_T)} \quad \textbf{Eq 20-17}$$

$$L_S = \frac{(S_s)(4)}{\pi\,(D^2)(\text{bulk density})} \quad \textbf{Eq 20-18}$$

Molecular sieve bulk density is 42 to 46 lb/ft^3 for spherical particles and 40 to 44 lb/ft^3 for extruded cylinders.

Even though the MTZ will contain some water (approximately 50% of the equilibrium capacity), the saturation zone is estimated assuming it will contain all the water to be removed.

The length of the mass transfer zone can be estimated as follows:

$$L_{MTZ} = (V_{adjusted} / 35)^{0.3}\,(Z) \quad \textbf{Eq 20-19}$$

Where: Z = 1.70 ft for 1/8 inch sieve
0.85 ft for 1/16 inch sieve

The total bed height is the summation of the saturation zone and the mass transfer zone heights. It should be no less than the vessel inside diameter, or 6 feet, whichever is greater.

Now the total bed pressure drop is checked. The ΔP/L for the selected diameter, $D_{selected}$, is adjusted using Eq 20-11 or the following approximation:

$$(\Delta P/L)_{adjusted} \cong (0.33\ \text{psi/ft})\left(\frac{V_{adjusted}}{V_{max}}\right)^2 \quad \textbf{Eq 20-20}$$

The result is multiplied times the total bed height (L_S + L_{MTZ}) to get the total design pressure drop, which should be 5-8 psi. This is important, because the operating pressure drop can increase to as much as double the design value over three years. Too high a pressure drop plus the bed weight can crush the sieve. If the design pressure drop exceeds 8 psi, the bed diameter should be increased and the sieve amount and vessel dimensions recalculated.

FIG. 20-77

Simplified Process Flow Diagrams of Enhanced TEG Regeneration Systems

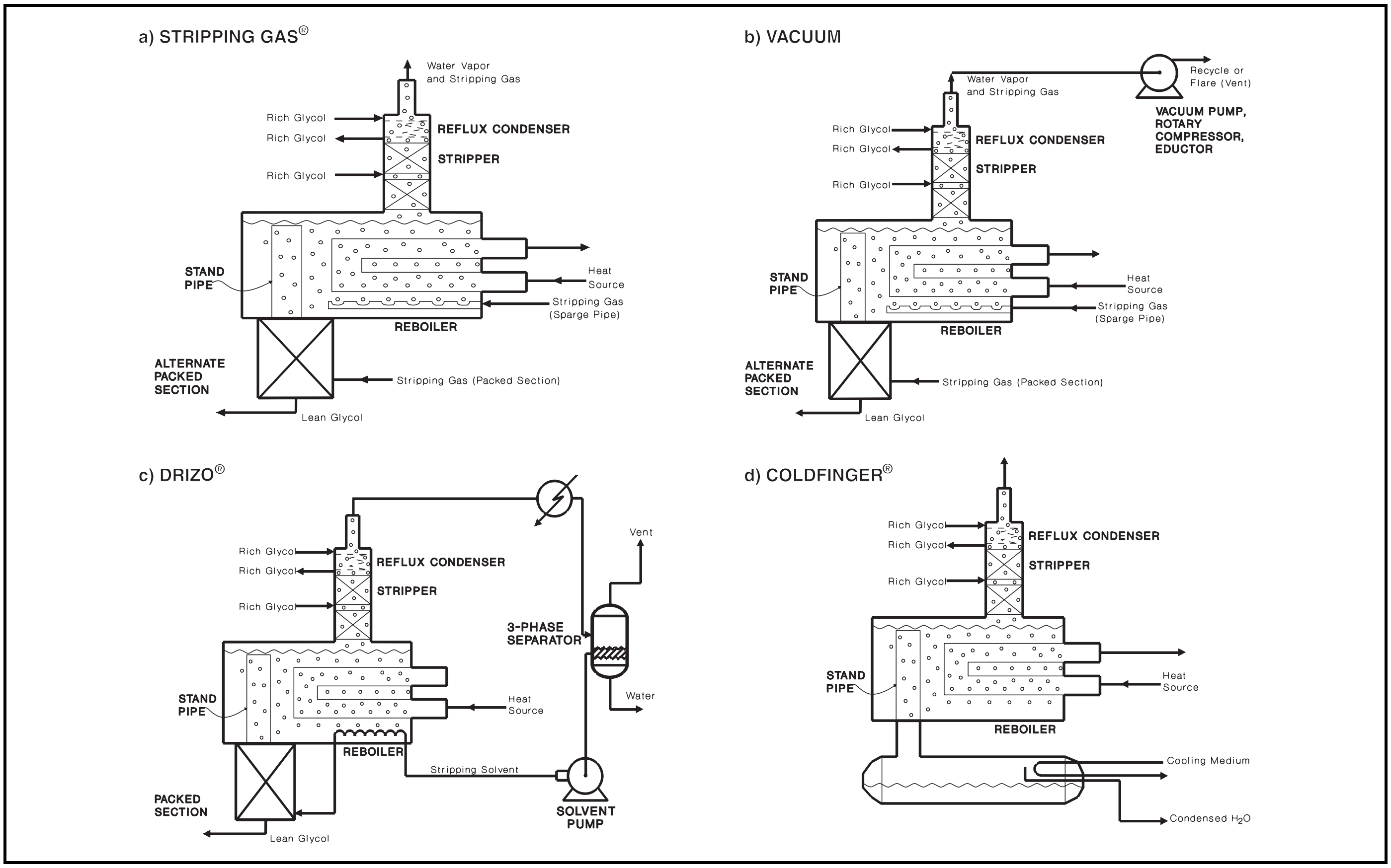

A second method uses Eq 20-17, but replaces the saturation capacity of 13% with an "effective desiccant capacity" which includes the MTZ effect, temperature, and relative humidity corrections. When using this method, an effective capacity of 8-10% is typically assumed. This method is adequate for most planning and feasibility calculations.

To estimate the total cylindrical length of a tower, add 3 feet to the bed height, which provides the space for an inlet distributor and for bed support and hold-down balls under and on top of the sieve bed.

Regeneration Calculations

The first step is to calculate the total heat required to desorb the water and heat the desiccant and vessel. A 10% heat loss is assumed.

$$Q_w = \left(1800\,\frac{\text{Btu}}{\text{lb}}\right)(\text{lbs of water on bed}) \qquad \textbf{Eq 20-21}$$

$$Q_{si} = (\text{lb of sieve})\left(\frac{0.24\text{ Btu}}{\text{lb °F}}\right)(T_{rg} - T_i) \qquad \textbf{Eq 20-22}$$

$$Q_{st} = (\text{lb of steel})\left(\frac{0.12\text{ Btu}}{\text{lb °F}}\right)(T_{rg} - T_i) \qquad \textbf{Eq 20-23}$$

$$Q_{hl} = (\text{heat loss}) = (Q_w + Q_{si} + Q_{st})(0.10) \qquad \textbf{Eq 20-24}$$

The temperature, T_{rg}, is the temperature to which the bed and vessel must be heated based on the vessel being externally insulated (i.e., no internal insulation which is usually the case). This is about 50°F below the temperature of the hot regeneration gas entering the tower.

The weight of the vessel steel is estimated from the equations below. Eq 20-25 is the ASME Section VIII equation in terms of the vessel inside diameter. It is based on a maximum tensile stress of 18,800 psi (i.e., the ASME 2001 maximum allowable tensile stress for SA516 Grade 70 steel at 650°F and a welded-joint efficiency of 1.0). This is 19,400 psi at 600°F. The design pressure, P_{design}, is usually set at 110% of the maximum operating pressure. The value of 0.125 in Eq 20-26 is the corrosion allowance in inches. The term $0.75D_{bed}$ is to account for the weight of the tower heads. The value of "3" provides the space for the inlet distributor and support and hold-down balls.

$$t(\text{inches}) = (12D_{bed}P_{design}) / ((2\text{x}18{,}800 = 37{,}600) - 1.2P_{design}) \qquad \textbf{Eq 20-25}$$

$$\text{Weight of steel (lb)} = 155(t + 0.125)(L_S + L_{MTZ} + 0.75D_{bed} + 3)D_{bed} \qquad \textbf{Eq 20-26}$$

For determination of the regeneration gas rate, calculate the total regeneration load from Eq 20-27.

$$Q_{tr} = (2.5)(Q_w + Q_{si} + Q_{st} + Q_{hl}) \qquad \textbf{Eq 20-27}$$

The 2.5 factor corrects for the change in temperature difference (in – out) across the bed with time during the regeneration period. It assumes that 40% of the heat in the gas transfers to the bed, vessel steel, and heat loss to atmosphere; and the balance leaves with the hot gas.

FIG. 20-78

Effect of Stripping Gas on TEG Concentration

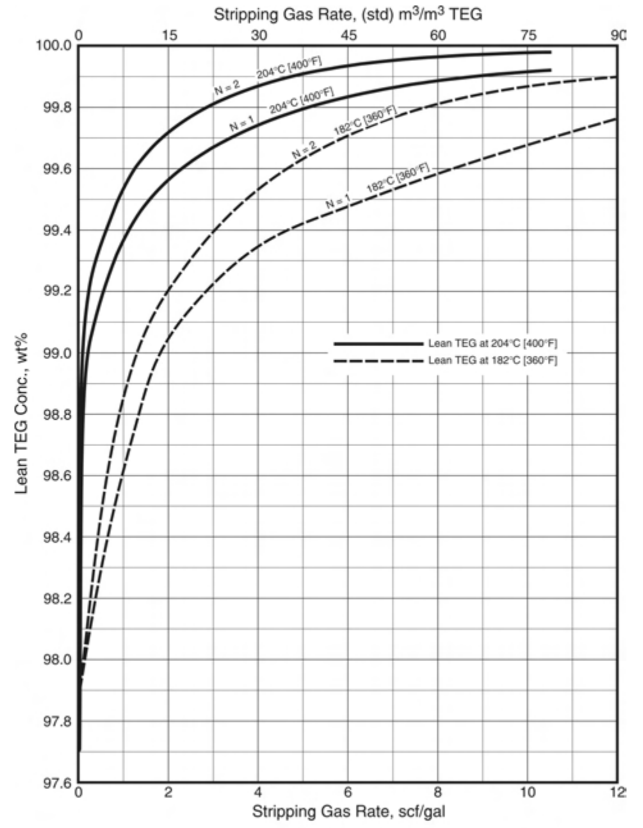

John M. Campbell and Company 2000, all rights reserved.

FIG. 20-79

Glycol Regeneration Processes

Process	TEG Conc. wt%	Water Dew Point Depression Possible, °F
Vacuum	99.2 to 99.9	100 to 150
COLDFINGER®	92.2 to 99.7	100 to 130
DRIZO®	99.99 to 99.999*	180 to 250*
Stripping Gas	99.2 to 99.9	100 to 150
*With Solvent Dryer		

The regeneration-gas flow rate is calculated from Eq 20-28 below. The heat capacity, C_p, is calculated with Eq 20-29, with the enthalpies obtained from the enthalpy vs. temperature plots for various pressures in Section 24. The temperature, T_{hot}, is 50°F above the temperature, T_{rg}, to which the bed must be heated. The temperature, T_b, is the bed temperature at the beginning of regeneration, which is the same as the dehydration-plant feed temperature.

The heating time is usually 50% to 60% of the total regeneration time which must include a cooling period. Figure 20-87 shows a typical temperature profile for a regeneration period (heating and cooling). For 8 hour adsorption periods, the regeneration normally consists of 4 1/2 hours of heating, 3 hours of cooling and 1/2 hour for standby and switching. For longer periods the heating time can be lengthened as long as a minimum pressure drop of 0.01 psi/ft is maintained to ensure even flow distribution across the bed.

$$\dot{m}_{rg} = Q_{tr}/(C_p(T_{hot} - T_b)(\text{heating time})) \qquad \textbf{Eq 20-28}$$

$$C_p\ (\text{Btu/lb/°F}) = (H_{hot} - H_i)/(T_{hot} - T_b) \qquad \textbf{Eq 20-29}$$

FIG. 20-80

Example Solid Desiccant Dehydrator Twin Tower System

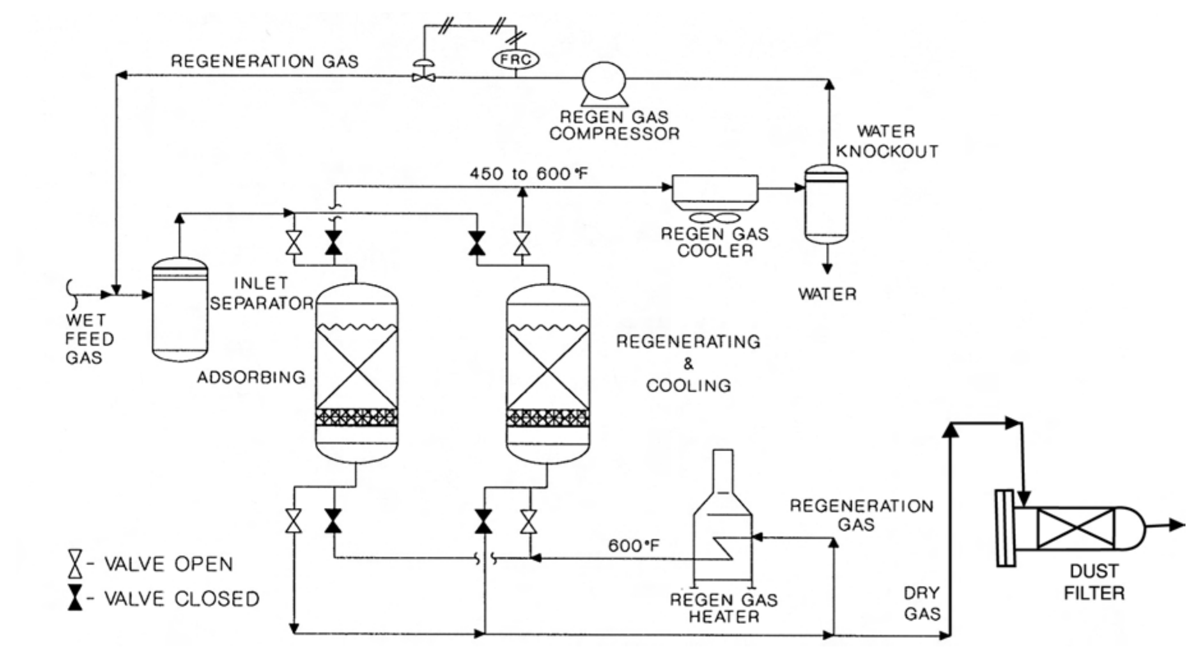

The superficial velocity of the regeneration gas is calculated from Eq 20-30 for which q is calculated from Eq 20-13

$$V = 4q / (\pi D^2) \qquad \textbf{Eq 20-30}$$

The calculated superficial velocity can not be less than the value that corresponds with a minimum bed pressure drop of 0.01 psi/ft. This can be determined from Fig. 20-88, which was derived from Eq 20-11 by assuming a gas composition and temperature and setting $\Delta P/L$ equal to 0.01 psi / ft. If the calculated velocity is less than this, the regeneration gas rate, $\dot{m}_{rg}$, must be increased by multiplying it by the ratio V_{min} / V, and the period of regeneration should be decreased by multiplying it times the ratio V / V_{min}. A method more exact than Fig. 20-16 for calculating the minimum superficial velocity is to use Eq 20-16, but to consider it in terms of $(\Delta P/L)_{min}$ and V_{min} instead of $(\Delta P/L)_{max}$ and V_{max}.

General Comments

The regeneration cycle frequently includes depressuring/repressuring to match the regeneration gas pressure and/or to maximize the regeneration gas volume to meet the velocity criterion. In these applications, the rate of depressuring or repressuring should not exceed 50 psi/minute. Some applications, termed pressure swing adsorption, regenerate the bed only with depressurization and sweeping the bed with gas just above atmospheric pressure.

Moisture analyzers for very low water contents require care to prevent damage to the probes. When inserted into the beds, sample probes and temperature probes must be installed to reach the center of the gas phase.

Solid desiccant towers are insulated externally or possibly internally. Internal refractory requires careful installation and curing, usually before the desiccant is installed. It saves energy but the greatest benefit is it can dramatically reduce the required heating and cooling times. This is often an important benefit for systems where regeneration times are limited. The primary disadvantage is the potential for wet gas bypassing the desiccant through cracks and defects in the insulation during the adsorption cycle.

Example 20-13: 100 MMscfd of natural gas with a molecular weight of 18 is to be processed for ethane recovery in a turboexpander plant. It is water saturated at 600 psia and 100°F and must be dried to –150°F dew point. Determine the water content of the gas, and the amount of water that must be removed; and do a preliminary design of a molecular-sieve dehydration system consisting of two towers with down-flow dehydration in one tower and up-flow regeneration in the other. Use 4A molecular sieve of 1/8" beads (i.e., 4x8 mesh). The regeneration gas is part of the plant's residue gas, which is at 600 psia and 100°F and has a molecular weight of 17. The bed must be heated to 500°F for regeneration.

Solution Steps

1. Determine the bed diameter and the corresponding $\Delta P/L$ and V. First determine the maximum superficial velocity from Eq 20-16. Let the maximum $\Delta P/L$ be 0.33 psi/ft.

   z = 0.93 from Fig. 23-5 for 17.4 mole weight which is conservative

   ρ = (18 mole weight) (600 psia) / (10.73(560 °R)(0.93 z)) = 1.93 lb/ft^3 (Eq 23-2)

   μ = 0.015 centipoise (Fig. 23-23)

   $V_{max} = \{(0.33 \text{ psi/ft}) / (0.000089) / (1.93) \text{ lb/ft}^3)\}^{1/2}$
   $- [(0.056 / 0.000089)\ (0.015 \text{ centipoise}/1.93 \text{ lb/ft}^3)/2]$
   = 41.4 ft/min (Eq 20-16)

   $\dot{m} = (100 \bullet 10^6 \text{ scf/day}) / ((24 \text{ hr/day})(379.43 \text{ scf/lb mole}))$ (18 lb/lb mole) = 198,000 lb/hr of wet gas

   q = (198,000 lb/hr)/((60 min/hr)(1.93 lb/ft^3))
   = 1710 ft^3/min of wet gas (Eq 20-13)

   $D_{minimum} = [(4(1710 \text{ ft}^3/\text{min}))/$
   $(\pi \bullet 41.4 \text{ ft/min})]^{1/2}$ = 7.25 ft (Eq 20-12)

   Round off upward to 7.5 ft diameter, for which V and $\Delta P/L$ are adjusted as follows:

   $V_{adjusted} = (41.4)(7.25/7.5)^2 = 38.7$ ft/min (Eq 20-14)

   $(\Delta P/L)_{adjusted} = 0.33(38.7/41.4)^2 = 0.29$ psi/ft (Eq 20-20)

2. Estimate the amount of water to be removed from the feed per cycle for each bed. Base this on a 24-hour cycle

FIG 20-81

Typical Desiccant Properties

Desiccant	Shape	Bulk Density, lb/ft^3	Particle Size	Heat Capacity, Btu/ (lb •°F)	Approx. Minimum Moisture Content of Effluent Gas
Alumina Alcoa F200	Beads	48	7x14 Tyler mesh 1/8" / 3/16" / 1/4"	0.24	–90°F dew point
Activated Alumina UOP A-201	Beads	46	3-6 mesh or 5-8 mesh	0.22	5-10 ppmv
Mole Sieve Grace – Davison 4A	Beads	42-45	4-8 mesh or 8-12 mesh	0.23	0.1 ppmv (–150°F)
Molecular Sieve UOP 4A-DG	Extrudate	40-44	1/8" or 1/16" pellets	0.24	0.1 ppmv
Mole Sieve Zeochem 4A	Beads	45-46	4-8 mesh or 8-12 mesh	0.24	0.1 ppmv
Silica Gel Sorbead® – R	Beads	49	5x8 mesh	0.25	–60°F dew point
Silica Gel Sorbead® – H	Beads	45	5x8 mesh	0.25	–60°F dew point
Silica Gel Sorbead®– WS	Beads	45	5x8 mesh	0.25	–60°F dew point

FIG. 20-82

Static Equilibrium Capacity vs. Relative Humidity for Selected Solid Desiccants[46]

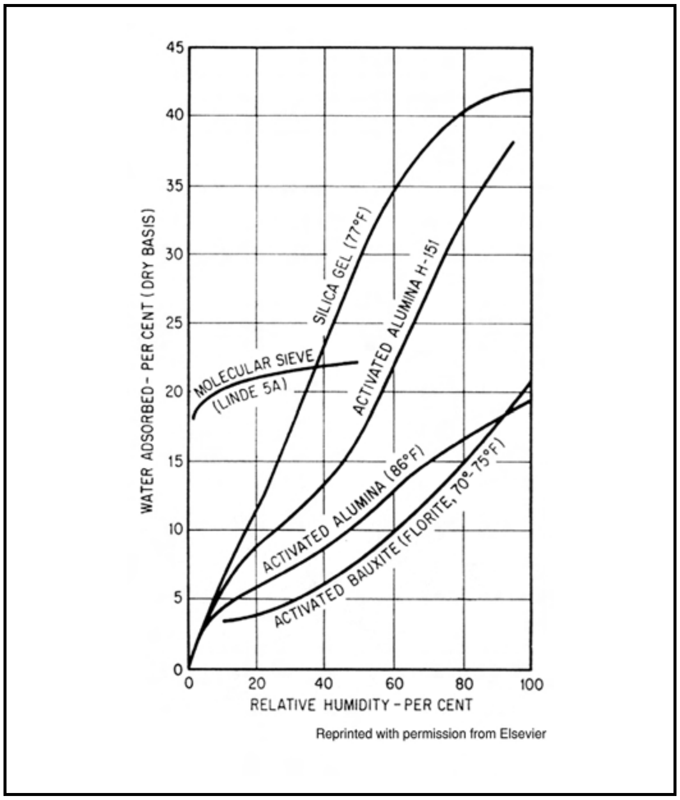

Reprinted with permission from Elsevier

consisting of 12 hours adsorbing and 12 hours regenerating (heating, cooling, standby, and valve switching). From Fig. 20-4, the water content at 600 psia and 100°F is 88 pounds per million standard cubic feet (MMscf). The water content at a dew point of –150°F is essentially zero, so the water removed is the following:

$\dot{w}$ = (88-0 lb/MMscf)(100 MMscf/day) / (24 hr/day) = 367 lb/hr of water removed

W_r = (367 lb/hr) (12 hr) = 4404 lb water removed per 12-hour drying period or 24-hour cycle per bed

3. Determine the amount of sieve required and the bed height based on a sieve bulk density of 45 lb/ft^3. Since the feed gas is water saturated, the relative humidity is 100%, so C_{SS} is 1.0 from Fig. 20-84. From Fig. 20-85, C_T is 0.93 at 100°F. Applying the equations:

   S_S = (4404) / ((0.13)(1.0)(0.93)) = 36,427 lb of sieve for each bed (Eq 20-17)

   L_S = (36,427)(4)/((3.1416) (7.5)^2 (45)) = 18.3 ft bed height (Eq 20-18)

   L_{MTZ} = (38.7/35)$^{0.3}$ (1.7) = 1.8 ft for mass-transfer zone (Eq 20-19)

   L_S + L_{MTZ} = 18.3 + 1.8 = 20.1 ft of sieve for each bed

   The total sieve = (20.1/18.3)(36,427) = 40,010 lb for each bed

4. Check the bed design and pressure drop which is the ΔP/L calculated in Step 1 times the total bed height calculated in Step 3:

   (0.29 psi/ft)(20.1 ft) = 5.8 psi which meets the criteron of not exceeding 5–8 psi/ft

FIG. 20-83

UOP™ Adsorbents
4A-DG MOLSIV™ Pellets — Water Adsorption Isotherms

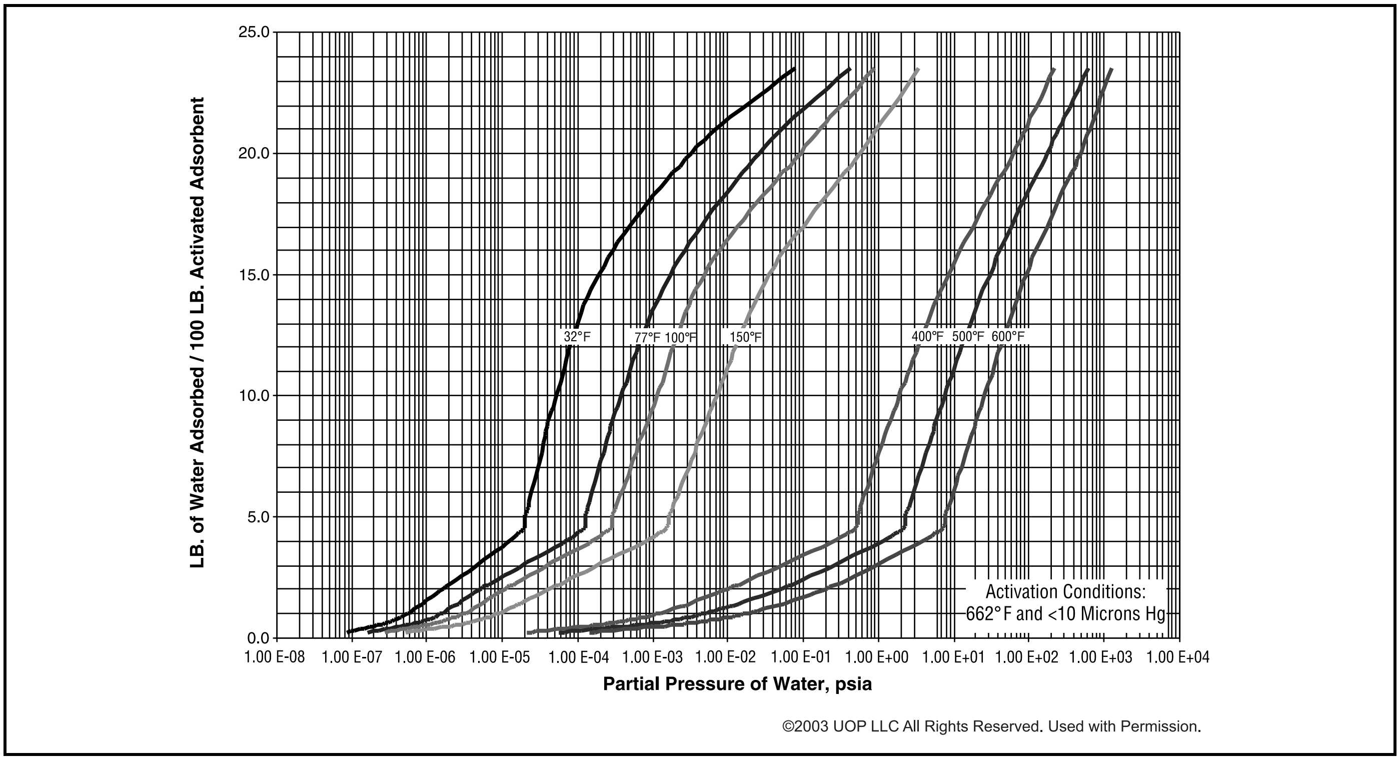

FIG. 20-8

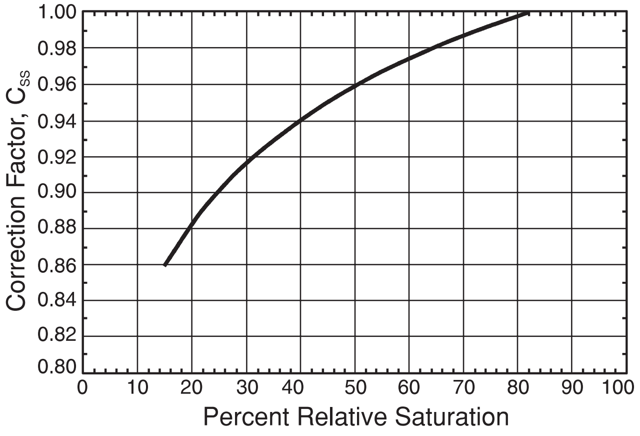

FIG. 20-85

Mole Sieve Capacity Correction for Temperature

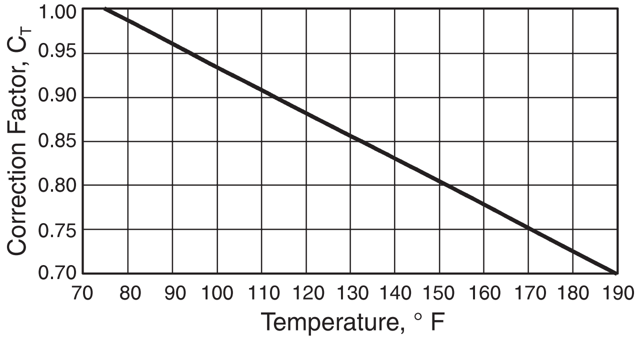

FIG. 20-86

Inlet and Outlet Temperatures During Typical Solid Desiccant Bed Regeneration Period

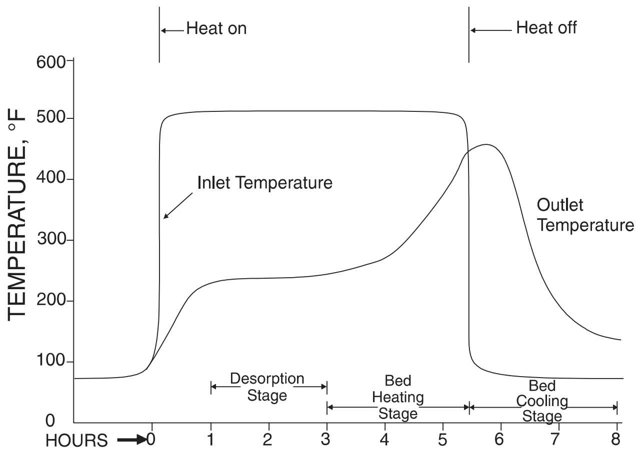

5. Calculate the total heat required to desorb the water based on heating the bed and vessel to 500°F. First calculate the weight of steel from Eq 20-25 and 20-26. Let the design pressure, P_{design}, be 110% of the operating pressure:

   P_{design} = (600)(1.1) = 660 psig

   t = (12)(7.5)(660) / (37,600 – (1.2)(660)) = 1.614 inches (Eq 20-25)

   Weight of steel = (155) (1.614 + 0.125) (18.3 + 1.8 + (0.75) (7.5) + 3) (7.5) = 58,070 pounds (Eq 20-26)

   Q_{st} = (58,070 lb) (0.12 Btu/lb/°F) (500°F – 100°F) = 2,787,000 Btu (Eq 20-23)

   Q_w = (1800 Btu/lb (4404 lb water) = 7,927,000 Btu (Eq 20-21)

   Q_{si} = (40,010 lb) (0.24 Btu/lb/°F) (500°F – 100°F) = 3,841,000 Btu (Eq 20-22)

   Q_{hl} = (2,787,000 + 7,927,000 + 3,841,000) (0.10) = 1,455,000 Btu (Eq 20-24)

   Q_{tr} = (2.5) (2,787,000 + 7,927,000 + 3,841,000 + 1,455,000) = 40,025,000 Btu (Eq 20-27)

6. Calculate the flow rate of regeneration gas using Eq 20-28. Let the heating time be 60% of the total regeneration period, and calculate the gas heat capacity, C_p, from Eq 20-29:

   (60%) (12 hr) = 7.2 hours heating

   C_p (@ 600 psia from Fig. 24-12) = ((545 – 250) (Btu/lb))/((550 – 100) (°F)) = 0.66 Btu/lb/°F (Eq 20-29)

FIG. 20-87

Allowable Velocity for Mole Sieve Dehydrator

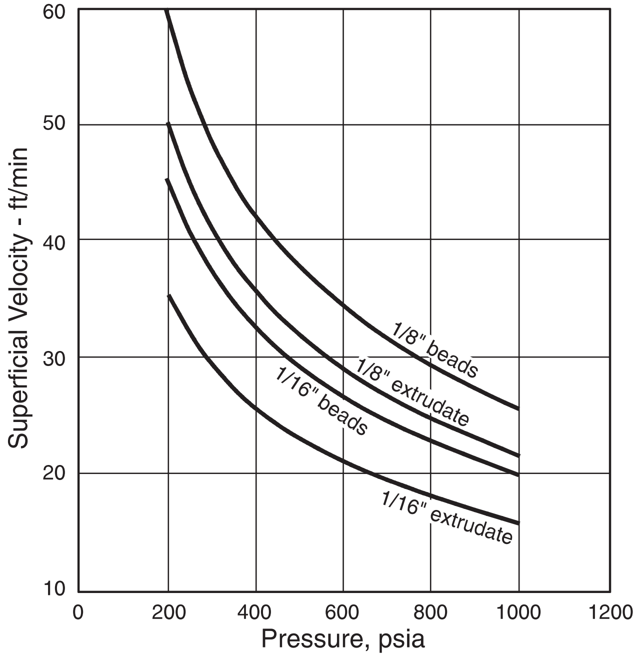

$\dot{m}_{rg}$ = (40,025,000 Btu)/((0.66 Btu/lb/°F) (550 – 100) (°F) (7.2 hr)) = 18,717 lb/hr (Eq 20-28)

7. Check that the $\Delta P/L \geq 0.01$ psi/ft at 550°F.

ρ = ((17 mole weight)(≈600 psi) /((10.73) (460 + 550)) = 0.94 lb/ft^3

FIG. 20-88

Minimum Regeneration Velocity for Mole Sieve Dehydrator

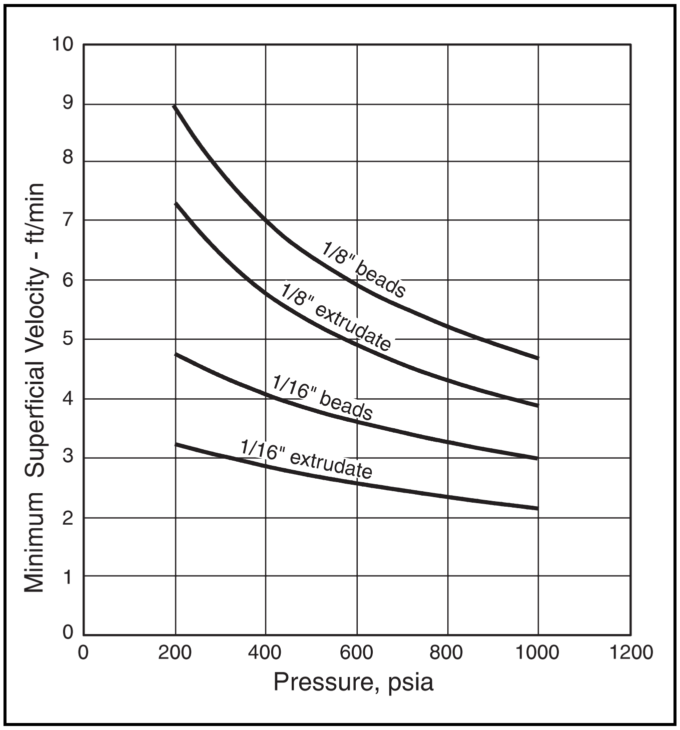

FIG. 20-89

Typical $CaCl_2$ Dehydrator

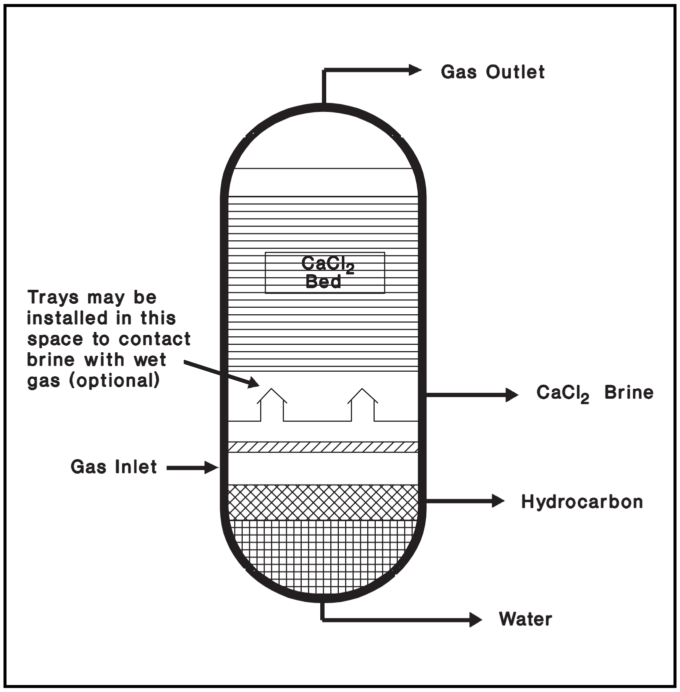

q = (18,717 lb/hr) / ((60 min/hr) (0.94 lb/ft^3)) = 331.9 ft^3/min of hot regeneration gas (Eq 20-13)

Rearranging Eq 20-12:

V = 4q/πD^2 = ((4)(331.9)/((3.414)(7.5)^2) = 6.91 ft/min

μ = 0.023 cP (Fig. 23-23)

$\Delta P/L$ = (0.056) (0.023) (6.91) + (0.000089) (0.94) (6.91)^2 = 0.013 psi/ft (Eq 20-11)

This is safely above the minimum value of 0.01 psi/ft needed to prevent channeling.

8. The design results are summarized as follows:

Number of vessels: two

Vessel design pressure and temperature: 660 psig and 600°F

Vessel dimensions: 90 inches (7.5 feet) ID by 23.1 feet tan to tan

Weight of molecular sieve: 2x40,010 lb

Regeneration gas rate: 18,717 lb/hr (10.026 MMscfd)

Regeneration gas temperature: 550°F

Cycle time: 24 hours, 12 hours adsorption, 12 hours regeneration

FIG. 20-90

Example IFPEX-1 ® Dehydration Process Flow Diagram

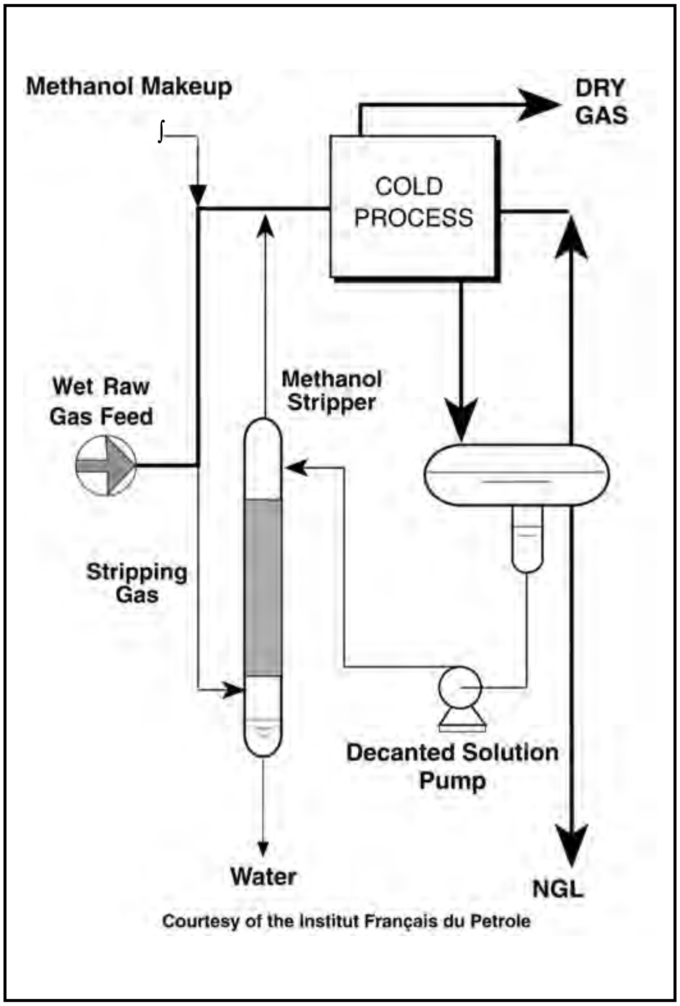

Courtesy of the Institut Français du Petrole

Heating time: 7.2 hours

This example is based on regeneration with a gas that is separate from the main stream that has been dehydrated. If a slip-stream of dehydrated gas is used as illustrated on Fig. 20-80, the amount of regeneration gas must be assumed and added to the inlet gas. In this case several trials must be performed until the amount calculated for regeneration is equal to the amount added to the plant feed. As illustrated by the above example, a good initial assumption is 10% of the plant feed.

Bottom bed support typically includes three to five layers of inert ceramic balls in graduated sizes (smallest on top). On top of the bed, a hold-down screen is provided, again covered with a layer of ceramic balls. In some cases, a layer of less expensive desiccant can be installed on the top of the bed to catch contaminants such as free water, glycol, hydrocarbons, amines, etc. This may extend the bed life. Good inlet separation of entrained contaminants is absolutely essential for long desiccant life.

Since solid desiccants can produce dust, 1μm filters are frequently installed at the outlet of the dehydration unit to protect downstream equipment.

Operating performance should be monitored periodically to adjust adsorption cycle length so that adequate dehydration is obtained. Performance tests are scheduled on a routine basis, ranging from monthly during early operations to six months or longer. The size of the unit and frequency of regeneration cycles also affect the timing of performance tests.

Calcium Chloride

Calcium chloride ($CaCl_2$) can be used as a consumable desiccant to dehydrate natural gas. Solid anhydrous $CaCl_2$ combines with water to form various $CaCl_2$ hydrates ($CaCl_2 \cdot XH_2O$). As water absorption continues, $CaCl_2$ is converted to successively higher states of hydration – eventually forming a $CaCl_2$ brine solution.

3/8 in. to 3/4 in. $CaCl_2$ pellets are installed in a fixed bed much like a dry desiccant tower. Gas flow is upflow. The more efficient designs utilize 3-4 trays below the solid bed to pre-contact the gas with the brine solution. This removes a portion of the water from the gas before contact with the solid $CaCl_2$ and increases unit capacity. One such unit is shown in Fig. 20-89.

The solid $CaCl_2$ near the bottom of the fixed bed will typically be $CaCl_2 \cdot 4H_2O$ or $CaCl_2 \cdot 6H_2O$ and the $CaCl_2$ at the top of the fixed bed will be anhydrous $CaCl_2$ or $CaCl_2 \cdot H_20$. In this way the gas contacts successively drier $CaCl_2$ as it flows upwards and in theory leaves the fixed bed in equilibrium with the $CaCl_2$ at the top of the bed.

Outlet water contents of 1 lb/MMscf have been achieved with $CaCl_2$ dehydrators. Typical $CaCl_2$ capacity is 0.3 lb $CaCl_2$ per lb H_20. Superficial bed velocities are 20-30 ft/min and length to diameter ratio for the bed should be at least 3 to 4:1.

$CaCl_2$ dehydrators may offer a viable alternative to glycol units on low rate, remote dry gas wells. The $CaCl_2$ must be changed out periodically. In low capacity – high rate units this may be as often as every 2-3 weeks. Brine disposal raises environmental issues. In addition, under certain conditions the $CaCl_2$ pellets can bond together to form a solid bridge in the fixed bed portion of the tower. This results in gas channeling and poor unit performance.

Dehydration by Refrigeration

The dehydration of natural gas can also be achieved by refrigeration and/or cryogenic processing down to – 150°F in the presence of methanol hydrate and freeze protection. The condensed water and methanol streams decanted in the cold process can be regenerated by conventional distillation or by a patented process called IFPEX-1®.

In the latter process illustrated in schematic form in Figure 20-90[48] a slip stream of water saturated feed gas strips essentially all the methanol in the cold decanted methanol water stream originating in the cold process at feed gas conditions to recirculate the methanol to the cold process. The water stream leaving the stripper contains generally less than 100 ppm wt of methanol. No heat is required for the process and no atmospheric venting takes place.

Dehydration By Membrane Permeation

Membranes can be used to separate gas stream components in natural gas such as water, CO_2 and hydrocarbons according to their permeabilities. Each gas component entering the separator has a characteristic permeation rate that is a function of its ability to dissolve in and diffuse through the membrane.

The driving force for separation of a gas component in a mixture is the difference between its partial pressure across the membrane. As pressurized feed gas flows into the metal shell of the separator, the fast gas component, such as water and CO_2, permeate through the membrane. This permeate is collected at a reduced pressure, while the non-permeate stream, i.e., the dry natural gas, leaves the separator at a slightly lower pressure than the feed.

The amount of methane and other natural gas components in the permeate stream is dependent on pressure drop and the surface area of the membranes. However, 5–10% of the feed stream is a realistic figure. Dehydration by membrane permeation is therefore normally only considered for plants that can make use of low pressure natural gas fuel.

LIQUID DEHYDRATION

Many liquid streams must be dehydrated to allow further processing or meet requirements of a handling chain to a direct consumer. Commercial propane must be dry before entering the fuel market to prevent freezing problems as the liquid vaporizes at temperatures below the hydrate point, or even below the freezing point of any free water that may be present.

The amount of water that can be in solution with light hydrocarbon liquid is very small, even at the saturation point. Effective drying to very low levels of moisture is usually required. The solubility of water in liquid hydrocarbons is presented in Fig. 20-2. The desired maximum moisture level for commercial propane is approximately 10 ppmw. However, liquids exposed to cryogenic temperatures require virtually all the moisture be removed.

The water content in light hydrocarbon liquids can be determined by using recommended methods in GPA Publication 2140 (Cobalt Bromide or Freeze Valve methods), or electronic instruments designed to indicate the moisture content directly.

Gas Stripping

One simple method of dehydrating liquid hydrocarbons is counter current stripping with a dry gas. This method is currently used to dry condensate produced offshore prior to export from the production platform. The contactor is usually trayed. Stripping gas rates depend on the condensate rate, the amount of entrained water in the condensate, stripper temperature and pressure.

Advantages of this process are simplicity and low capital cost. Disadvantages include the requirement for a dry natural gas stream, and the coincidental stripping of some of the volatile hydrocarbons from the condensate. The stripping gas may be recycled to the gas dehydration unit or it can be used as fuel gas.

Solid Desiccant Dehydration

Several solid desiccant processes are available to dry liquid hydrocarbons.

Liquid velocity is usually 3-5 ft/minute through solid desiccant beds with a minimum travel of at least 5 feet to ensure good distribution. Direction of flow can be upflow or downflow in the adsorption cycle.

Special care must be taken in designing the bed supports in the liquid dehydrator vessels to prevent desiccant loss, desiccant damage, and to ensure proper distribution. Layers of ceramic balls are installed in decreasing size from the support screen. The support ball sizes may vary with the type and size of solid desiccant used but the layers of support balls should never be graduated in size more than twice the diameter of the balls being supported.

The regeneration of solid desiccant beds is very similar to gas dehydrators with the following exceptions:

- Liquid draining and filling time must be allowed.
- Pressuring and depressuring must be done carefully to avoid bed movement.
- Adequate bed cooling is required before liquid re-entry to minimize flashing.

It is important to prevent movement of the bed particles to prevent attrition that would require premature replacement. Also, desiccant dust particles can cause downstream plugging, equipment damage, and excessive filter maintenance. Liquid and vapor velocities must be controlled carefully and flashing of liquids or accelerated blow-down rates that would “lift” or “float” all or portions of the bed should be avoided.

Desiccant bed life can be extended by doing several or all of the following activities:

- Prevent the desiccant particles from moving.
- Keep contaminants out of the dehydrating portion of the bed by upstream conditioning or by providing a sacrificial layer of less expensive desiccant to act as a catcher of any compounds such as amine, glycol or oil.
- Prevent overheating the bed to reduce the formation of carbon during the regeneration cycle.
- Analyze the heating/cooling regeneration temperature cycles to minimize the time the bed is at elevated temperatures. This will also minimize energy requirements.

A typical heating/cooling regeneration temperature cycle plot is shown in Fig. 20-87, with a description of the stage activities. There are typically four (4) distinct stages in a normal cycle:

Stage 1—First bed-heating stage

Stage 2—Desorption stage

Stage 3—Second bed-heating stage

Stage 4—Bed-cooling stage

For a period of time after the heat source is introduced into a desiccant bed being dehydrated, the bed must be heated to a temperature where the water will start to be desorbed (Stage 1). As the water is desorbed (Stage 2), the bed temperature will usually rise only a few degrees because the regeneration gas heat is utilized to provide the heat of vaporization of the water being removed. The completion of the water desorption stage is characterized by a rapid increase in bed temperature measured as the outlet temperature. At this point the heating may be discontinued while bed heating will continue from residual heat in the heating cycle (Stage 3). As the unheated regeneration gas stream continues to pass through the bed, the bed will be cooled (Stage 4).

At near ambient pressures, regeneration of silica gel and alumina can be accomplished at 300°F. Molecular sieve requires 500-550°F to maintain the low dewpoint potential, and the higher temperatures may increase desiccant life by providing more complete removal of adsorbed hydrocarbons.

Capacity and performance data for new solid desiccants are usually presented based on a static test. Under operating conditions (dynamic) the performance data may be significantly different. Typically the effective capacity at operating conditions is about one-half of the capacity at equilibrium (static) conditions for most solid desiccants. This operating characteristic must be considered when designing a dehydration system and can be influenced by careful design and good control of operating parameters such as temperatures, contaminant levels, regeneration cycles, and desiccant selection. Solid desiccant manufacturers should be consulted for the most current product information and design criteria.

Molecular Sieve

Molecular sieve is not normally used for liquid dehydration because the required level of water removal is usually moderate and the cost of molecular sieve is considerably more than other types of suitable desiccants, such as activated alumina. However, in extreme cases where the moisture content of the liquid must be kept at an unusually low concentration, molecular sieve should be considered.

Molecular sieve may be used for removing other undesirable compounds, such as H_2S, COS, mercaptans, etc., from liquid streams. Dehydration may be a secondary benefit of using this type of treating method.

Refer to the discussion of molecular sieve for gas dehydration elsewhere in this Section for more information.

Activated Alumina

There are several types of alumina available for use as a solid desiccant. Alumina is widely used for drying liquid product streams following gas processing, treating, or fractionation. Most alumina desiccants will produce a dewpoint below –100°F if applied properly. Alumina tends to adsorb heavy hydrocarbons which are difficult to remove during regeneration. Alumina is alkaline and is subject to reaction with mineral acids which are found in some well treating fluids.

The design of a solid desiccant liquid dehydration system is similar to a gas dehydration system. An effective desiccant capacity of 4-5% is typically used in liquid dehydrator design.

Calcium Chloride

Calcium chloride is used as a consumable desiccant. Solid calcium chloride combines with water to form a brine solution. From one to two pounds of water can be absorbed by a pound of calcium chloride. Large liquid $CaCl_2$ dehydrators are usually operated in a series that can be reversed with a moisture monitor located between the beds. In that way when the lead sacrificial bed is exhausted, no wet product is produced. The exhausted $CaCl_2$ bed is then recharged and the vessels reversed in service.

The bed size can be estimated using a superficial velocity of 3-5 ft/min and an L/D of 2.5 to 4:1.

Calcium chloride dehydration has become less popular because of the environmental problem of disposing of the produced brine.

Distillation

Wet NGLs can be dehydrated by distillation in specially designed fractionation columns. It will generally suffice to withdraw a sidestream liquid distillate three to four fractionation trays below the top of the distillation column to assure a dry product. Water in the NGL feed is passed overhead and is decanted in the overhead reflux drum while reflux is returned to the top of the column. Some extra costs will be required for the sidestream liquid withdrawal and cooling, but this can still be the most cost-effective manner to achieve the dehydration of propane and/or butane LPG products to adequate dryness specifications. The bottoms product of the distillation should be bone dry.

REFERENCES

1. Brady, C.J., Cunningham, J.R., Wilson, G.M., RR-62 - "Water-Hydrocarbon Liquid-Liquid-Vapor Equilibrium Measurements to 530°F", Gas Processors Association, Sept. 8, 1982.
2. Erbar, J.H. et.al.; RR-42, "Predicting Synthetic Gas and Natural Gas Thermodynamic Properties Using a Modified Soave Redlich Kwong Equation of State"; Gas Processors Association, August 1980.
3. Yaws, C.L. et.al.; "Hydrocarbons: Water Solubility Data"; Chem Eng. Vol. 97, No. 4, April 1990, p. 177.
4. McKetta, J.J. and Wehe, A.H., "Use This Chart for Water Content of Natural Gases", Petroleum Refiner (Hydrocarbon Processing), Vo. 37, No. 8, August 1958, p. 153.
5. Kobayashi, R. and Song, K.Y.; RR-120 "Water Content Values of a CO_2 – 5.31 mol Percent Methane Mixture, Gas Processors Association, January 1989.
6. Selleck, F.T., Carmichael, L.T., and Sage, B.H., "Phase Behavior in the Hydrogen Sulfide-Water System", Ind & Engr. Chem., Vol. 44, No. 9, Sept. 1952, p. 2219.
7. Wiebe, R. and Gaddy, V.L., "Vapor Phase Composition of Carbon Dioxide Water Mixtures at Various Temperatures and Pressures to 700 Atmospheres", *J. Am Chem Soc.,* Vol. 63, p. 475-477 (1941).
8. Maddox, R.N., et.al.; "Estimating Water Content of Sour Gas Mixtures", Gas Conditioning Conference, Univ. of Oklahoma, Norman OK, March 1988.
9. Robinson, J.M., et.al, "Estimation of the Water Content of Sour Natural Gases", Trans AIME, Vol. 263, August 1977, p. 281.
10. Song, K.Y. and Kobayashi, R.; RR-50, "Measurement and Interpretation of the Water Content of a Methane – 5.31 mol% Propane Mixture in the Gaseous State in Equilibrium with Hydrate", Gas Processors Association, January 1982.
11. Aoyagi, et.al.; RR-45, "I. The Water Content and Correlation of the Water Content of Methane in Equilibrium with Hydrates. II. The Water Content of a High Carbon Dioxide Simulated Prudhoe Bay Gas in Equilibrium with Hydrates", Gas Processors Association, December 1980.
12. Song, K.Y. and Kobayashi, R.; RR-80, "The Water Content of CO_2 – Rich Fluids in Equilibrium with Liquid, Water, or Hydrate", Gas Processors Association, May 1984.
13. Mehta, A.P. and Sloan, E.D. "Structure H Hydrates: The State-of-the-Art." Proceedings 75th GPA Annual Convention, Denver, CO, 1996.
14. Katz, D.L., "Prediction of Conditions for Hydrate Formation in Natural Gases", Trans. AIME Vol. 160, 1945, p. 140.
15. Carson, D.B., and Katz, D.L., "Natural Gas Hydrates", Trans. AIME Vol. 146, 1942, p. 150.
16. Robinson, D.B., and Ng, H.L., "Improve Hydrate Predictions", Hyd. Proc. Vol. 54, No. 12, Dec. 1975, p. 95.
17. Poettmann, F.H., "Here's Butane Hydrates Equilibria", Hyd. Proc., Vol. 63, No. 6, June 1984, p. 111.
18. Sloan, E.D. et.al.; "Vapor-Solid Equilibrium Ratios for Structure I & II Natural Gas Hydrates", Proceedings 60th GPA Annual Convention, San Antonio, Tx., 1989.
19. McCleod, H.O. and Campbell, J.M., "Natural Gas Hydrates at Pressures to 10,000 psia", Trans. AIME, Vol. 222, 1961, p. 590.
20. Blanc, C. and Tournier-Lasserve, J., "Controlling Hydrates in High Pressure Flowlines", World Oil, Vol. 211, No. 5, p. 63.
21. Noaker, L.J. and Katz, D.L., "Gas Hydrates of Hydrogen Sulphide-Methane Mixtures", Trans. AIME Vol. 201, 1954, p. 237.
22. Baillie, C. and Wichert, E.; "Chart Gives Hydrate Formation Temperature for Natural Gas"; O&GJ, Vol. 85, No. 14, April 6, 1987, p. 37.
23. Schroeter, *et. al.*; TP-10 - "Hydrate Decomposition Conditions in the System Hydrogen Sulfide, Methane and Propane", Gas Processors Association, December 1982.
24. Unruh, C.H., and Katz, D.L., "Gas Hydrates of Carbon Dioxide-Methane Mixtures", Trans. AIME, Vol. 186, 1949, p. 83.
25. Hammerschmidt, E.G., "Formation of Gas Hydrates in Natural Gas Transmission Lines", Ind. Eng. Chem., Vol. 26, 1934, p. 851.
26. Nielsen, R.B. and Bucklin, R.W., "Why not use methanol for hydrate control?", Hyd. Proc., Vol. 62, No. 4, April 1983, p. 71.
27. Maddox, R.N., et.al., "Predicting Hydrate Temperature at High Inhibitor Concentration", Proceedings 1991 Gas Conditioning and Processing Conference, Univ. of Oklahoma, Norman, OK.
28. Ng, H.–J., Chen, C–J., Robinson, D.B.; RR-92, "The Effect of Ethylene Glycol or Methanol or Hydrate Formation in Systems Containing Ethane, Propane, Carbon Dioxide, Hydrogen Sulfide or a Typical Gas Condensate", Gas Processors Association, September 1985.
29. Ng. H.–J., Chen C.–J., Robinson, D.B.; RR-106, "The Influence of High Concentrations of Methanol or Hydrate Formation and The Distribution of Glycol in Liquid-Liquid Mixtures", Gas Processors Association, April 1987.
30. Défontaines, A.D., IFP Report No. 42324, "Experimental studies in hydrate formation in methanol hydrocarbons at very low temperatures," July 1995

31. Jacoby, R.H., “Vapor-Liquid Equilibrium Data for the Use of Methanol in Preventing Gas Hydrates”, Proceedings of Gas Hydrate Control Conference, Univ. of Oklahoma, May 5–6, 1953.
32. Ng, H.–J., Chen C.–J., Robinson, D.B.; RR-117, “The Solubility of Methanol or Glycol in Water – Hydrocarbon Systems”, Gas Processors Association, March 1988.
33. Stange, E., Majeed, A., Overa, S.; Norsk Hydro Experimentations and Modeling of the Multiphase Equilibrium and Inhibition of Hydrates.
34. Barreau, L., IFP Report No. 39652, “Experimental studies in liquid/Liquid equilibrium of methanol/water/hydrocarbons,” April 1992.
35. Parrish, W.R., Won, K.W., and Baltatu, M.E., “Phase Behavior of the Triethylene Glycol-Water System and Dehydration/Regeneration Design for Extremely Low Dew Point Requirements”, Proceedings 65th GPA Annual Convention, San Antonio, TX, 1986, p. 202.
36. Townsend, F.M., “Vapor-Liquid Equilibrium Data for DEG and TEG-Water-Natural Gas System”, Proceedings 1953 Gas Conditioning Conference, Univ. of Oklahoma, Norman, OK.
37. Scauzillo, F.R., “Equilibrium Ratios of Water in the Water-Triethylene Glycol-Natural Gas System”, Trans. AIME, Vol. 222, 1961, p. 697.
38. Worley, S., “Super Dehydration with Glycols”, Proceedings 1967 Gas Conditioning Conference, Univ. of Oklahoma, Norman, OK.
39. Rosman, A., “Water Equilibrium in the Dehydration of Natural Gas with Triethylene Glycol”, Trans. AIME, Vol. 255, 1973, p. 297.
40. Herskowitz, M., and Gottlieb, M., “Vapor-Liquid Equilibrium in Aqueous Solutions of Various Glycols and Poly (Ethylene) Glycols, 1, Triethylene Glycol”, J. Chem. Eng. Data, Vol. 29, 1984, p. 173.
41. Takahashi, S., Kobayashi, R.; TP-9, “The Water Content and Solubility of CO_2 in Equilibrium with DEG-Water and TEG-Water Solutions at Feasible Absorption Conditions”, Gas Processors Association, December 1982.
42. Jou, F.-Y., Mather, A.E., Otto, F.D.; “Acid Gas Solubility in Glycols”, Proceedings 1988 Gas Conditioning Conference, Univ. of Oklahoma, Norman, OK.
43. Robinson, D.B., Chen C.-J., Ng, H.-J.; RR-131, “The Solubility of Selected Aromatic Hydrocarbons in TEG”, Gas Processors Association, May 1991.
44. Larue, J., et al, IFP Internal Note JL/MZ No. 363, “Calculation of methanol dissolution in TEG based on Lichtkin et al., *Tr Khim Tekhnol*, March 3, 1973.
45. Wallace, C.B., “Dehydration of Supercritical CO_2”, Proceedings 1985 Gas Conditioning Conference, Univ. of Oklahoma, Norman, OK.
46. Reprinted from Figure 12–5, page 637, of Kohl, A.L., and Riesenfeld, F.C., “Gas Purification,” 4th edition, 1985, Gulf Publishing Company, Houston, Texas, with permission from Elsevier.
47. Ergun, S. “Fluid Flow Through Packed Columns”, Chem. Eng. Prog., Vol. 48, No. 2, Feb. 1952, p. 89.
48. Minkkinen, A., Larue, J. and Patel, S., “Methanol Gas Treating Scheme Offers Economics, Versatility,” The Oil and Gas Journal, June 1, 1992, p. 65.
49. Wagner, Jan, RR 169 – "Water-Hydrocarbon Mutual Solubility Data," Gas Processors Association, June 1999.
50. Olds, R.H., Sage, B.H., and Lacy, W.N., "Composition of the Dew-Point Gas of the Methane-Water System," Industrial and Engineering Chemistry, 1943, pp 1223–1227.
51. Wichert, G.C. and Wichert, E., "New Charts Provide Accurate Estimations for Water Content of Sour Natural Gas," O&GJ, October 27, 2003, pp 64–66.
52. Won, K.W., "Thermodynamic Basis of the Glycol Dew-Point Chart and its Application to Dehydration," Proceedings 73rd GPA Annual Convention, New Orleans, LA, 1994, pp 108–133.
53. Kean, J.A., Turner, H.M., Price, B.C., "Structured Packing in Triethylene Glycol Dehydration Service," Laurence Reid Gas Conditioning Conference, Norman, Oklahoma, March 4–6, 1991, pp 228–258.
54. Kohl, A.L. and Nielsen, R.B., "Gas Purification," 5th Edition, 1997, Gulf Publishing, Houston.
55. Hubbard, R. A., "Method Advanced for Evaluating TEG Systems," Oil and Gas Journal, September 11, 1989, pp 47–52.

Suggested Reading

1. Gas Conditioning Fact Book, The Dow Chemical Company, Midland, Michigan (1957, 1962)
2. Campbell, John M., Gas Conditioning and Processing, Vols. I & II, 6^{th} Edition, 2nd printing (1988), Campbell Petroleum Series
3. Katz. D.L., Cornell , D., Kobayashi, R., Poettman, F.H., Vary, J.A., Elenbaas, J.R., and Weinaug, “Handbook of Natural Gas Engineering”, 1959, McGraw-Hill, NY, NY
4. Sloan , Jr., E. Dendy, “Clathrate Hydrates of Natural Gases”, 1990, Marcel Dekker, Inc., NY, NY.
5. Rojey, A. and Jaffret, C., “Natural Gas Production Processing Transport.” Editions Technip 1995.

SECTION 21

Hydrocarbon Treating

There are many methods that may be employed to remove acidic components (primarily H_2S and CO_2) and other impurities from hydrocarbon streams. The available methods may be broadly categorized as those depending on chemical reaction, absorption, adsorption or permeation. Processes employing each of these techniques are described and a general bibliography for additional reading is included. Because of the diversity of the processes available, and new processes introduced, all possible processes are not discussed. Fig. 21-1 contains the nomenclature and a glossary of terms used in this section.

FIG. 21-1

Nomenclature

Absorption: A separation process involving the transfer of a substance from a gaseous phase to a liquid phase through the phase boundary.

Acid Gases: Impurities in a gas stream usually consisting of CO_2, H_2S, COS, RSH, and SO_2. Most common in natural gas are CO_2, H_2S and COS.

Acid Gas Loading: The amount of acid gas, on a molar or volumetric basis, that will be picked up by a solvent.

Adsorption: The process by which gaseous components adhere to solids because of their molecular attraction to the solid surface.

Alkanolamine: An organic nitrogen bearing compound related to ammonia having at least one, if not two or three of its hydrogen atoms substituted with at least one, if not two or three linear or branched alkanol groups where only one or two could also be substituted with a linear or branched alkyl group (i.e. methyldiethanolamine MDEA). The number of hydrogen atoms substituted by alkanol or alkyl groups at the amino site determine whether the alkanolamine is primary, secondary or tertiary.

Antifoam: A substance, usually a silicone or a long-chain alcohol, added to the treating system to reduce the tendency to foam.

Chelate: An organic molecule in which a central metallic ion is held in a coordination compound.

Claus Process: The process in which one third of the H_2S is burned to SO_2 which is then reacted with the remaining H_2S to produce elemental sulfur.

Degradation Products: Impurities in a treating solution that are formed from both reversible and irreversible side reactions.

Doctor Sweet: Describes a hydrocarbon stream which has had mercaptans removed to a level that it passes the Doctor Test (GPA-1138).

Grain: A unit of mass where one pound is equivalent to 7,000 grains and a specification of 0.25 grain of H_2S per 100 SCF is equivalent to an H_2S concentration of 4.0 ppmv.

Mercaptan: Any of a homologous series of compounds of the general formula RSH. All of the materials possess a foul odor, e.g. methyl mercaptan.

Physical Solvent: A liquid capable of absorbing selected gas components by solubility alone without associated chemical reactions.

ppmv: A volume concentration of a species in a bulk fluid measured in parts per million.

Residence Time: The time period for which a fluid will be contained within a specified volume.

Selective Treating: Preferential removal of one acid gas component, leaving at least some of the other acid gas components in the treated stream.

Sour Gas: Gas containing undesirable quantities of hydrogen sulfide, mercaptans and/or carbon dioxide.

Sterically Hindered Amine: An alkanolamine containing a bulky substituent group close to the amino nitrogen site to lower the stability of the carbamate ion thus inhibiting reactions with CO_2 owing to the bulky nature of the CO_2 molecule. (i.e. diisopropanolamine DIPA).

SRU: Sulfur recovery unit.

Sweet Gas: Gas which has no more than the maximum sulfur content defined by: (1) the specifications for the sales gas from a plant; (2) the definition by a legal body such as the Texas Railroad Commission.

TGCU (Tail Gas Clean up Unit): a process unit that takes tail gas from a SRU and removes additional sulfur .

Threshold Limit Value: The amount of a contaminant to which a person can have repeated exposure for an eight hour day without adverse effects.

SAFETY PRECAUTIONS

Hydrogen sulfide is a highly toxic gas. At concentrations as low as 10 ppmv irritation of the eyes, nose, and throat is possible. The human nose can detect hydrogen sulfide in concentrations as low as 0.02 ppmv. However, the human sense of smell cannot be relied on to detect hazardous concentrations of hydrogen sulfide. Higher concentrations and extended exposure to hydrogen sulfide will desensitize the sense of smell. The concentrations required for different reactions by the human body are:[1]

1. Threshold limit value (TLV) for prolonged exposure: 10 ppmv
2. Slight symptoms after several hours exposure: 10-100 ppmv
3. Maximum concentration that can be inhaled for one hour without serious effects such as significant eye and respiratory irritation: 200-300 ppmv
4. Dangerous after exposure of 30 minutes to one hour: 500-700 ppmv
5. Fatal in less than 30 minutes: 700-900 ppmv and above.
6. Death in minutes: greater than 1000 ppmv

Hydrogen sulfide is highly flammable and will combust in air at concentrations from 4.3 to 46.0 volume percent. Hydrogen sulfide vapors are heavier than air and may migrate considerable distances to a source of ignition.

Gaseous carbon dioxide is a naturally occurring gas that is 50% heavier than air and is colorless and odorless. It is also a principal by-product of combustion. CO_2 is inactive and therefore non-flammable. CO_2 will displace oxygen and can create an oxygen-deficient atmosphere resulting in suffocation. The principal hazard of CO_2 is exposure to elevated concentrations. The atmospheric concentration immediately hazardous to life is 10% (volume).[2] Because CO_2 is heavier than air, its hazard potential is increased, especially when entering tanks and vessels. "A common but erroneous belief is that CO_2 simply acts as an asphyxiant by lowering the oxygen level below the 16 percent minimum necessary to sustain life (at sea level). Although this is frequently the case in most serious accidents, CO_2 begins to have a noticeable effect on normal body functions at about two to three percent. The concentration of carbon dioxide in the blood affects the rate of breathing, a measurable increase resulting from a level of one percent in the inspired air."[2]

Anyone engaged in the design or operation of a facility in which H_2S and/or CO_2 are present should seek expert advice for detailed safety precautions and mechanical design considerations.

TYPES OF CONTAMINANTS

Ammonia (NH_3)
Hydrogen sulfide (H_2S)
Hydrogen cyanide (HCN)
Carbon dioxide (CO_2)
Carbonyl sulfide (COS)
Carbon disulfide (CS_2)
Mercaptans (RSH)
Nitrogen (N_2)
Water (H_2O)
Sulfur dioxide (SO_2)
Elemental sulfur
Mercury and arsenic
Oxygen

Removal of these contaminants is required for reasons of safety, corrosion control, gas and/or liquid product specifications, to prevent freeze-out at low temperatures, to decrease compression costs, to prevent poisoning of catalysts in downstream facilities and to meet environmental requirements. The removal of water (dehydration) is discussed in Section 20. The discussion in this section will deal with removal of some or all of the sulfur-containing compounds and carbon dioxide.

PRETREATMENT

All gas sweetening units should have well-designed pretreatment facilities. Carryover of brine or liquid hydrocarbon (as slugs or aerosol) from upstream production operations can cause problems for gas treating and downstream processing equipment. Also, field facilities are not typically designed to remove troublesome contaminants like gas-phase heavy hydrocarbons. These contaminants can likewise cause operational difficulties in the sweetening process.

Inlet Separation

If gross liquid carryover from an upstream facility is possible, a slug catcher is recommended. It should be sized not only for steady inlet fluid volumes, but for surge capacity to handle slugs of liquid hydrocarbons, water, and/ or well treatment chemicals. See Section 17 for options regarding slug catcher design.

If aerosols are a concern, an inlet filter separator is suggested. Selected filter elements can remove entrained droplets down to 0.3 microns in diameter. The detailed design of filter separators is described in Section 7. Note that the effectiveness of a filter separator may be enhanced by the injection of a small amount of polymer into the gas stream upstream of the filter[3.]

In lieu of an inlet filter separator, a water wash column may be placed ahead of the sweetening unit. Water washing can be particularly effective for removing glycol mists or fogs. Of course, stainless steel or other corrosion-resistant alloy should be considered for water washing in a sour environment. In the case of fine iron sulfide blowing in a dry pipeline, a glycol wash column has been reported to be an effective means of solids removal[4].

For liquid hydrocarbon treatment, a filter coalescer may be used to remove suspended water or glycol prior to further processing.

Hydrocarbon Dewpoint Control

Heavy hydrocarbons (C6+) can be absorbed by solvents, which could lead to foaming in the sweetening unit. It is possible to reduce the heavy hydrocarbon content of the incoming gas through cooling (via Joule-Thomson expansion, propane refrigeration, or turbo-expansion as described in Section 16), and subsequent condensation of the heavy components. The condensed liquids are removed, and the gas is warmed above the saturation temperature before going to the sweetening unit.

An alternative means to remove gaseous heavy hydrocarbons is through adsorption. Either alumina or silica gel beds may be used in parallel such that one bed is regenerated while the other is in service. The beds are regenerated by heating and desorbing the hydrocarbons. The heavy hydrocarbons are recovered from the regeneration gas via condensation.

Rubbery membranes may have potential applications in heavy hydrocarbon dewpointing. However this technology has been tested only to a limited extent at this point of time. (See Section 16, Emerging Technologies).

Oxygen Contamination

Oxygen entry into a hydrocarbon system is often troublesome. If liquid water is present, severe corrosion may occur. If H_2S or sulfur is present, corrosion by a different mechanism or sulfur deposition and plugging may occur. Oxygen contamination may be addressed by several different approaches but the first step is to find and correct the source of oxygen entry into the system. This is often the simplest and most cost effective approach. Most oxygen leaks may be traced to compressor suctions or pipe fittings.

To eliminate oxygen contamination a number of possibilities exist:

- React the oxygen with chemicals.
  Chemicals such as amines, organics or inorganic compounds may be added to remove free oxygen. Oxygen scavengers are available from many suppliers such as Lubchem and Baker-Petrolite.
- Thermal oxidation reactions.
  Integrated processes such as the DeOxy by Optimized Process Designs can perform a very limited burn to consume the free oxygen.
- Remove other reactants that cause problems with the presence of oxygen. By removing offending components such as water or H_2S that react with oxygen, the presence of low amounts of oxygen may be tolerated.
- Treat the symptom.
  Corrosion inhibitors, filtration and / or alternate schemes may be utilized to stop or offset any adverse effects of oxygen contamination.

GAS TREATING – PROCESS OPTIONS

The gas treating process can affect the design of the entire gas processing facility including methods chosen for acid gas disposal and sulfur recovery, dehydration, liquids recovery, liquids fractionation and liquid product treating. Some of the factors to be considered in making a gas treating process selection are:

- Air pollution regulations regarding sulfur compound disposal and/or Tail Gas Clean Up (TGCU) requirements.
- Type and concentration of impurities in the sour gas.
- Specifications for the residue gas.
- Specifications for the acid gas.
- Temperature and pressure at which the sour gas is available and at which the sweet gas must be delivered.
- Volume of gas to be processed.
- Hydrocarbon composition of the gas.
- Selectivity required for acid gas removal.
- Capital cost and operating cost.
- Royalty cost for process.
- Liquid product specifications.
- Disposal of byproducts considered hazardous chemicals.

Any process which requires disposal of waste chemicals must determine if the chemical is considered "hazardous". The permitting requirements and economic impact of hazardous waste disposal on a project must not be overlooked.

The importance of having an accurate analysis of the inlet gas stream cannot be overstressed. Process selection and economics depend on knowing all components present in the gas. Impurities such as COS, CS_2 and mercaptans (even in very small concentrations) can have a significant impact on the process design of both the gas treating and downstream processing facilities.[5,6]

If the gas processing facility is to be used in conjunction with liquids recovery, the requirements for H_2S, CO_2, and mercaptan removal may be affected. In liquid recovery plants, varying amounts of H_2S, CO_2, and other sulfur compounds will end up in the liquid product. Failure to remove these components prior to liquids recovery may require liquid product treating in order to meet product specifications. In many instances, liquid treating may be required anyway.

When sulfur recovery is required, the composition of the acid gas stream feeding the sulfur plant must be considered. With CO_2 concentrations greater than 80% in the acid gas, the possibility of selective treating should be considered to raise the H_2S concentration to the sulfur recovery unit (SRU). This may involve a multi-stage gas treating system in which the gas exiting the first stage is enriched by passing it through another absorption solvent loop.

High concentrations of hydrocarbons can cause design and operating problems for the SRU. The effect of these components must be weighed when selecting the gas treating process to be used. Further discussion of this can be found in Section 22.

Decisions in selecting a gas treating process can many times be simplified by gas composition and operating conditions. High partial pressures (50 psi) of acid gases enhance the possibility of using a physical solvent. The presence of significant quantities of heavy hydrocarbons in the feed discourages using physical solvents. Low partial pressures of acid gases and low outlet specifications generally require the use of amines for adequate treating. Process selection is not easy and a number of variables must be weighed prior to making a process selection. Fig. 21-2 gives a summary for a number of processes.

Controlling pH is very important in most of the processes discussed in this section. The following is offered to assist in understanding electrolyte solutions and pH.

An electrolyte is a substance or material that will provide ionic conductivity when dissolved in water. Both bases and acids, if they ionize in water, can be electrolytes. In water, acids ionize or split, into H^+ and the anion. The H^+ combines with a water molecule to form H_3O^+ which is usually written as H^+ and is referred to as a hydrogen ion, or proton. Water-soluble bases, on the other hand, ionize in water to produce hydroxyl or OH^- ions and a cation. Pure water ionizes such that the concentration of H^+ (and OH^-) in the solution is 10^{-7} gram ions / liter.

The method used for measuring hydrogen and hydroxyl ion concentrations uses pH (from the French pouvoir hydrogene), where the pH of a solution is the logarithm (base 10) of the reciprocal of the hydrogen ion concentration (gram mole / liter). For pure water, then, the pH would be:

$$pH = \log(1/[H^+]) = 7$$

FIG. 21-2

Process Capabilities for Gas Treating

	Normally Capable of Meeting 4 ppmv H_2S	Removes Mercaptans and COS	Selective H_2S Removal	Solution Degraded (By)
Primary Amine	Yes	Partial	No	Yes (COS, CO_2, CS_2)
Secondary Amine	Yes	Partial	No	Some (COS, CO_2, CS_2)
Tertiary Amine	Yes	Partial	Yes*	No
Hybrid/Mixed	Yes	Partial	Yes*	Some (CO_2, CS_2)
Physical Solvent	Yes	Yes	Yes*	No
Solid Bed	Yes	Yes	Yes*	No
Liquid Redox	Yes	No	Yes	CO_2 at high conc.
Sacrificial	Yes	Partial	Yes	No

* Some selectivity exhibited

When a water molecule dissociates, one proton and one hydroxyl ion are formed. The concentration of OH^- in pure water, then, is also 10^{-7} mole / liter.

A strong acid (or strong base) is one which ionizes completely in water solution. Typical are HCl or NaOH. At an acid concentration of 0.1 mole / liter, the pH of a strong acid will be 1. The following table will be helpful in understanding the relative concentrations of H^+ and OH^- in solutions of different pH.

	pH	Concentration, mole/liter	
		H^+	OH^-
	1	$1.0 \bullet 10^{-1}$	$1.0 \bullet 10^{-13}$
Acid Side (Excess H^+)	2	$1.0 \bullet 10^{-2}$	$1.0 \bullet 10^{-12}$
	3	$1.0 \bullet 10^{-3}$	$1.0 \bullet 10^{-11}$
	4	$1.0 \bullet 10^{-4}$	$1.0 \bullet 10^{-10}$
	5	$1.0 \bullet 10^{-5}$	$1.0 \bullet 10^{-9}$
	6	$1.0 \bullet 10^{-6}$	$1.0 \bullet 10^{-8}$
Neutral Solution	7	$1.0 \bullet 10^{-7}$	$1.0 \bullet 10^{-7}$
	8	$1.0 \bullet 10^{-8}$	$1.0 \bullet 10^{-6}$
	9	$1.0 \bullet 10^{-9}$	$1.0 \bullet 10^{-5}$
	10	$1.0 \bullet 10^{-10}$	$1.0 \bullet 10^{-4}$
	11	$1.0 \bullet 10^{-11}$	$1.0 \bullet 10^{-3}$
Basic Side	12	$1.0 \bullet 10^{-12}$	$1.0 \bullet 10^{-2}$
(excess OH-)	13	$1.0 \bullet 10^{-13}$	$1.0 \bullet 10^{-1}$

Example 21-1 — 5,000 gallons of amine solution with a pH of 12 is to be neutralized by the addition of hydrochloric acid (HCl). How many pounds of pure HCl will be required?

Solution steps:

$$5{,}000 \text{ gal.} \bullet 3.79 \text{ (liter/gal)} = 1.9 \bullet 10^4 \text{ liters}$$

For each liter of solution the change in OH^- (H^+) required is

$$(10^{-2}) - (10^{-7}) = 1.0 \bullet 10^{-2} \text{ gram moles / liter}$$

The total requirement of HCl is

$$(1.9 \bullet 10^4) \text{ liter} \bullet (1.0 \bullet 10^{-2}) \text{ (g mole/liter)} = 190 \text{ g mole}$$

or

$$\frac{(190 \text{ g mole})(36.5 \text{ g/g mole})}{454 \text{ (gram/pound)}} = 15.3 \text{ pounds HCl}$$

Note that at a pH of 7, all of a weak acid (base) would probably not be neutralized. The pH required to have all of a weak acid (base) neutralized will vary with the acid but will usually be less (greater) than 7. In the example all of the HCl is neutralized because it is completely ionized in the water solution.

CHEMICAL SOLVENT PROCESSES

Chemical reaction processes remove the H_2S and/or CO_2 from the gas stream by chemical reaction with a material in the solvent solution. The reactions may be reversible or irreversible. In reversible reactions the reactive material removes CO_2 and/or H_2S in the contactor at high partial pressure and/or low temperature. The reaction is reversed by high temperature and/or low pressure in the stripper. In irreversible processes the chemical reaction is not reversed and removal of the H_2S and/or CO_2 requires continuous makeup of the reacting material. Fig. 21-4 shows the process flow for a typical reversible chemical reaction process. Figure 21-5 is a table of physical properties of gas treating chemicals. Figures 21-6 through 21-8 show vapor pressures at various temperatures, and freezing points and specific gravity for some of the treating chemicals.

Aqueous Alkanolamine Processes

Originally applied to gas treating in 1930 by Bottoms,[7] alkanolamines have become the most widely used solvents for the removal of acid gases from natural gas streams.[8] Triethanolamine (TEA) was the first used commercially for gas treating. It has been displaced for conventional applications by other alkanolamines such as monoethanolamine (MEA), diethanolamine (DEA), diisopropanolamine (DIPA), diglycolamine® (DGA®) and methyldiethanolamine (MDEA).

Fig. 21-3 lists approximate guidelines for a number of alkanolamine processes.

The alkanolamine (hereafter amine) processes are particularly applicable where acid gas partial pressures are low and/or low levels of acid gas are desired in the residue gas. Because the water content of the solution minimizes heavy hydrocarbon absorption, these processes are well suited for gases rich in heavier hydrocarbons. Some amines can be used to selectively remove H_2S in the presence of CO_2.

Chemistry — The overall equilibrium reactions applicable for H_2S and CO_2 and primary and secondary amines are shown below with a primary amine[9]. A qualitative estimation of the velocity of the reaction is given.

For hydrogen sulfide removal

$RNH_2 + H_2S \leftrightarrow RNH_3^+ + HS^-$ Fast **Eq. 21-1**

$RNH_2 + HS^- \leftrightarrow RNH_3^+ + S^{--}$ Fast **Eq. 21-2**

The overall reactions between H_2S and amines are simple since H_2S reacts directly and rapidly with all amines to form the bisulfide by Eq. 21-1 and the sulfide by Eq. 21-2.

For carbon dioxide removal

$2\,RNH_2 + CO_2 \leftrightarrow RNH_3^+ + RNHCOO^-$ Fast **Eq. 21-3**

$RNH_2 + CO_2 + H_2O \leftrightarrow RNH_3^+ + HCO_3^-$ Slow **Eq. 21-4**

$RNH_2 + HCO_3^- \leftrightarrow RNH_3^+ + CO_3^{--}$ Slow **Eq. 21-5**

FIG. 21-3

Approximate Guidelines for Amine Processes[1]

	MEA	DEA(9)	DGA®	Sulfinol	MDEA(9)
Acid gas pickup, scf/gal @ 100°F, normal range(2)	3.1–4.3	6.7– 7.5	4.7–7.3	4–17	3–7.5
Acid gas pickup, mols/mol amine, normal range(3)	0.33–0.40	0.20–0.80	0.25–0.38	NA	0.20–0.80
Lean solution residual acid gas, mol/mol amine, normal range(4)	0.12 ±	0.01 ±	0.06 ±	NA	0.005–0.01
Rich solution acid gas loading, mol/mol amine, normal range(3)	0.45–0.52	0.21–0.81	0.35–0.44	NA	0.20–0.81
Solution concentration, wt%, normal range	15–25	30–40	50–60	3 comps., varies	40–50
Approximate reboiler heat duty, Btu/gal lean solution(5)	1,000–1,200	840–1,000	1,100–1,300	350–750	800–900
Steam heated reboiler tube bundle, approx. average heat flux, Q/A = Btu/hr-ft^2 (6)	9,000–10,000	6,300–7,400	9,000–10,000	9,000–10,000	6,300–7,400
Direct fired reboiler fire tube, average heat flux, Q/A = Btu/hr-ft^2 (6)	8,000–10,000	6,300–7,400	8,000–10,000	8,000–10,000	6,300–7,400
Reclaimer, steam bundle or fire tube, average heat flux, Q/A = Btu/hr-ft^2 (6)	6–9	NA(7)	6–8	NA	NA(7)
Reboiler temperature, normal operating range, °F(8)	225–260	230–260	250–270	230–280	230–270
Heats of reaction;(10) approximate: Btu/lb H_2S	610	720	674	NA	690
Btu/lb CO_2	660	945	850	NA	790

NA — not applicable or not available

NOTES:

1. These data alone should not be used for specific design purposes. Many design factors must be considered for actual plant design.
2. Dependent upon acid gas partial pressures and solution concentrations.
3. Dependent upon acid gas partial pressures and corrosiveness of solution. Might be only 60% or less of value shown for corrosive systems.
4. Varies with stripper overhead reflux ratio. Low residual acid gas contents require more stripper trays and/or higher reflux ratios yielding larger reboiler duties.
5. Varies with stripper overhead reflux ratios, rich solution feed temperature to stripper and reboiler temperature.
6. Maximum point heat flux can reach 20,000–25,000 Btu/hr-ft^2 at highest flame temperature at the inlet of a direct fired fire tube. The most satisfactory design of firetube heating elements employs a zone by zone calculation based on thermal efficiency desired and limiting the maximum tube wall temperature as required by the solution to prevent thermal degradation. The average heat flux, Q/A, is a result of these calculations.
7. Reclaimers are not used in DEA and MDEA systems.
8. Reboiler temperatures are dependent on solution conc. flare/vent line back pressure and/or residual CO_2 content required. It is good practice to operate the reboiler at as low a temperature as possible.
9. According to Total.
10. B.L. Crynes and R.N. Maddox, Oil Gas J., p. 65-67, Dec. 15 (1969). The heats of reaction vary with acid gas loading and solution concentration. The values shown are average[10].

FIG. 21-4

Typical Gas Sweetening by Chemical Reaction

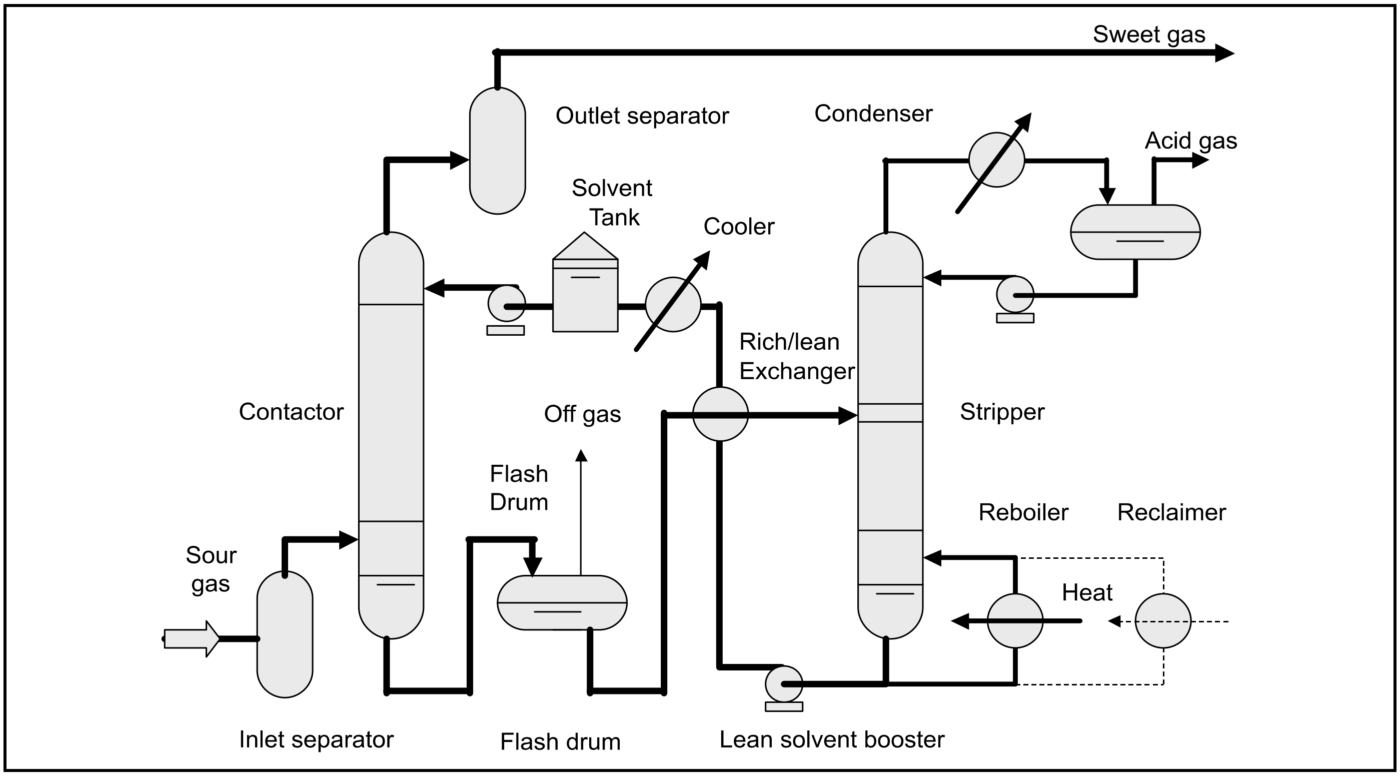

Concerning the chemical reactions with CO_2, primary amines (**RNH_2**) such as MEA and DGA® agent, and secondary amines (**RR'NH**) such as DEA and DIPA, differ from tertiary amines (**RR'R"N**) such as TEA and MDEA.

Primary and Secondary Amines

With the primary and secondary amines, the predominant overall reaction (Eq. 21-3) rapidly leads to the formation of a stable carbamate which is slow to further hydrolyze to bicarbonate.

The other overall reactions leading to bicarbonate (Eq. 21-4) and to carbonate (Eq. 21-5) are slow because they have to proceed through the hydration of CO_2.

Therefore, according to Eq. 21-3 there is a theoretical limit to the chemical loading capacity of the primary and secondary amine solutions to 0.5 mole CO_2 per mole of amine, even at relatively high partial pressures of CO_2 in the gas to be treated.

Tertiary Amines

Unlike primary and secondary amines, the nitrogen (**N**) in tertiary amines (**RR'R"N**) has no free hydrogen (**H**) to rapidly form carbamate as per overall Eq. 21-3. As a consequence, the removal of CO_2 by tertiary amines can only follow the slow route to bicarbonate by Eq. 21-4 and carbonate by Eq. 21-5.

The slowness of the reaction leading to bicarbonate is the underlying reason why tertiary amines can be considered selective for H_2S removal, by playing with absorption contact time, and this attribute can be used to full advantage when complete CO_2 removal is not necessary.

However, the slow route to bicarbonates theoretically allows at equilibrium a chemical loading ratio of one mole of CO_2 per mole of amine. Furthermore, at high partial pressure, the solubility of CO_2 in tertiary amines is far greater than in the primary and secondary amines thus further enhancing the CO_2 loading by physical solubility at high partial pressure.

Therefore, in case of gases to be treated for bulk CO_2 removal, large amounts of CO_2 can be liberated from the rich solvent by simple flash alleviating the thermal regeneration duty with consequent energy savings.

Activated Tertiary Amines

The use of activators mitigates the slowness of the reaction to bicarbonate for tertiary amines. Activators are generally primary or secondary amines; they are tailored to increase both the hydrolysis of the carbamate and the rate of hydration of dissolved CO_2 thus making the activated-tertiary amines specially suitable for efficient and economical bulk CO_2 removal when selectivity is not required (see section on MDEA).

Process Flow — The general process flow for an alkanolamine treating plant is shown in Fig. 21-4. The basic flow varies little for different solutions though some designs incorporate multiple feeds and contactor sections.

Sour natural gas enters through an inlet separator for the removal of liquids and/or solids. From the separator, the gas stream enters the bottom of the contactor where it contacts the amine solution flowing down from the top of the column. The acid gas components in the gas react with the amine to form a regenerable salt. As the gas continues to pass up the contactor, more acid gases chemically react with the amine. The sweetened gas leaves the top of the contactor and passes through an outlet separator to catch any solution which may

FIG. 21-5

Physical Properties of Gas Treating Chemicals

	Monoethanol-amine	**Diethanol-amine**	**Triethanol-amine**	**Diglycol®-amine**	**Diisopropanol-amine**	**Selexol®**
Formula	$HOC_2H_4NH_2$	$(HOC_2H_4)_2NH$	$(HOC_2H_4)_3N$	$H(OC_2H_4)_2NH_2$	$(HOC_3H_6)_2NH$	Polyethylene glycol derivative
Molecular Wt	61.08	105.14	148.19	105.14	133.19	280
Boiling point @ 760 mm Hg, °F	338.9	516.2 (decomposes)	680 (decomposes)	430	479.7	518
Freezing point, °F	50.9	82.4	72.3	9.5	107.6	–20
Critical constants						
Pressure, psia	868	474.7	355	547.11	546.8	–
Temperature, °F	662	827.8	957.7	756.6	750.6	–
Density @ 20°C, gm/cc.	1.018	1.095	1.124	1.058 @ 60°F	0.999 @ 30°C	1.031 @ 77°F
Weight, lb/gal	8.48 @ 60°F	9.09 @ 60°F	9.37 @ 68°F	8.82 @ 60°F		8.60 @ 77°F
Specific gravity 20°C/20°C	1.0179	1.0919 (30/20°C)	1.1258	1.0572	0.989 @ 45°C/20°C	–
Specific heat @ 60°F, Btu/lb/°F	0.608 @ 68°F	0.600	0.70	0.571	0.69 @ 30°C	0.49 @ 41°F
Thermal conductivity						
Btu/[(hr • sq ft • °F)/ft] @ 68°F	0.148	0.127	–	0.121	–	0.11 @ 77°F
Latent heat of vaporization, Btu/lb	180 @ 760 mmHg	288 @ 73 mmHg	230 @ 73 mmHg	219 @ 760 mmHg	185 @ 760 mmHg	–
Heat of reaction, Btu/lb of Acid Gas						
H_2S			–400	–674	–	–190 @ 77°F
CO_2			–630	–850	–	–160 @ 77°F
Viscosity, cp	24.1 @ 68°F	350 @ 68°F (at 90% wt. solution)	1013 @ 68°F (at 95% wt. solution)	40 @ 60°F	870 @ 86°F 198 @ 113°F 86 @ 129°F	5.8 @ 77°F
Refractive index, N_d 68°F	1.4539	1.4776	1.4852	1.4598	1.4542 @ 113°F	–
Flash point, COC, °F	200	298	365	260	255	304

	Propylene Carbonate	**Methyldiethanol-amine**	**Sulfolane®**	**Methanol**	**10% Sodium Hydroxide**
Formula	$C_3H_6CO_3$	$(HOC_2H_4)_2NCH_3$	$C_4H_8SO_2$	CH_3OH	
Molecular Wt	102.09	119.16	120.17	32.04	19.05
Boiling point @ 760 mm Hg, °F	467	477	545	148.1	217
Freezing point, °F	–56.6	–9.3	81.7	–143.8	14
Critical constants					
Pressure, psia	–		767.3	1153.9	
Temperature, °F	–		1013.8	464	
Density @ 20°C, gm/cc.	1.2057				
Weight, lb/gal		8.68	10.623 @ 30°C/30°C		9.254
Specific gravity 20°C/20°C	1.203	1.0418	1.268	0.7917	1.110
Specific heat @ 60°F, Btu/lb/°F	0.335	0.535	0.35 @ 30°C	0.59 @ 5°-10°C	0.897
Thermal conductivity					
Btu/[(hr • sq ft • °F)/ft] @ 68°F	0.12 @ 50°F	0.159	0.114 @ 100°F	0.124	
Latent heat of vaporization, Btu/lb	208 @ 760 mmHg	204	225.7 @ 212°F	474 @ 760 mmHg	
Heat of reaction, Btu/lb of Acid Gas					
H_2S	–				
CO_2					
Viscosity, cp	1.67 @ 100°F 19.4 cs @ –40°F 1.79 cs @ 100°F 0.827 cs @ 210°F	1.3 cs @ 50°F 0.68 cs @ 100°F 0.28 cs @ 212°F	10.3 @ 86°F 6.1 @ 122°F 2.5 @ 212°F 1.4 @ 302°F 0.97 @ 392°F	0.6 @ 68°F	1.83 @ 68°F 0.97 @ 122°F 0.40 @ 212°F
Refractive index, N_d 68°F	1.4209	1.469	1.481 @ 86°F	1.3286	
Flash point, COC, °F	270	265	350	58	

FIG. 21-6

Vapor Pressures of Gas Treating Chemicals

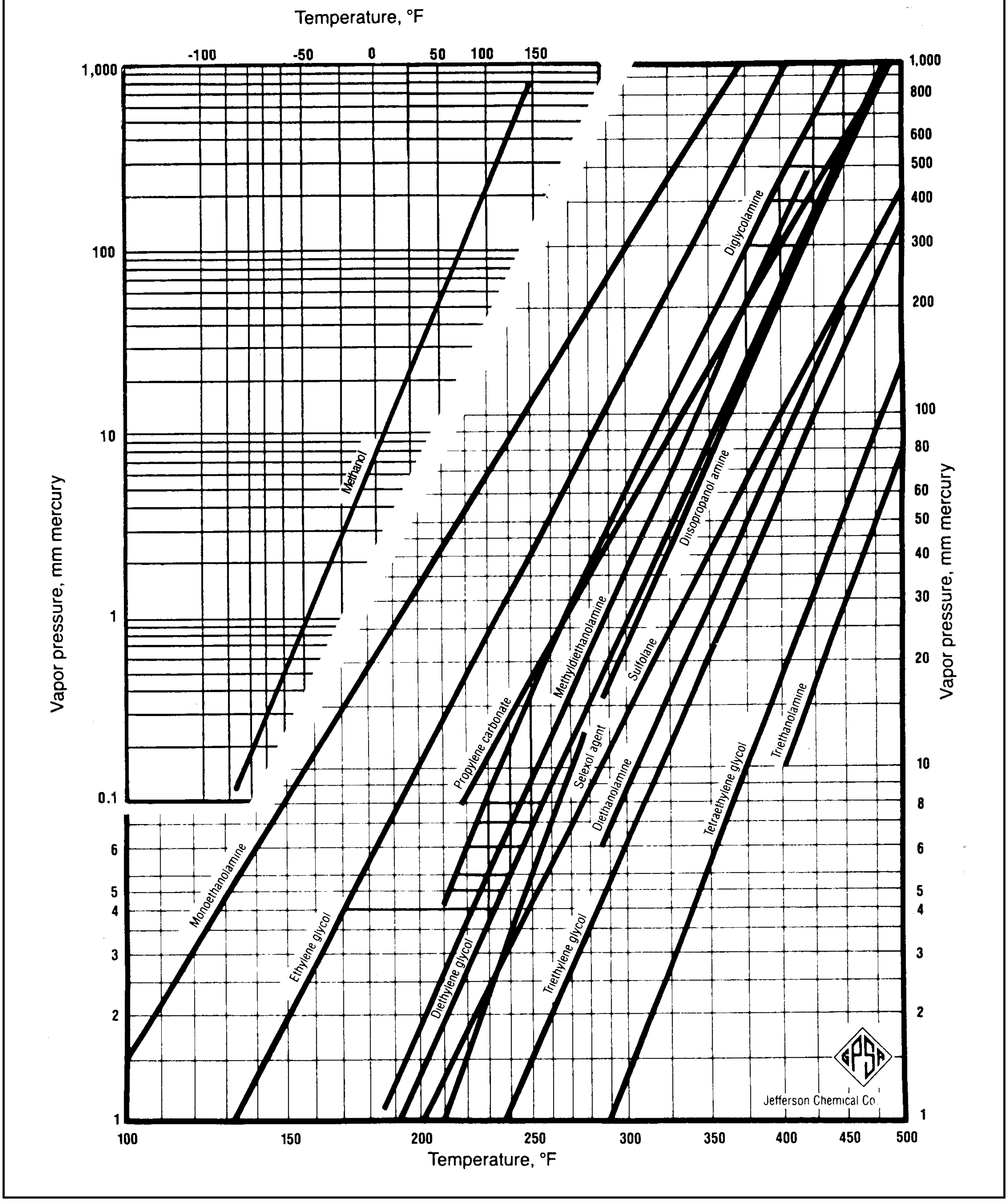

FIG. 21-7

Freezing Points of Aqueous Amine Solutions

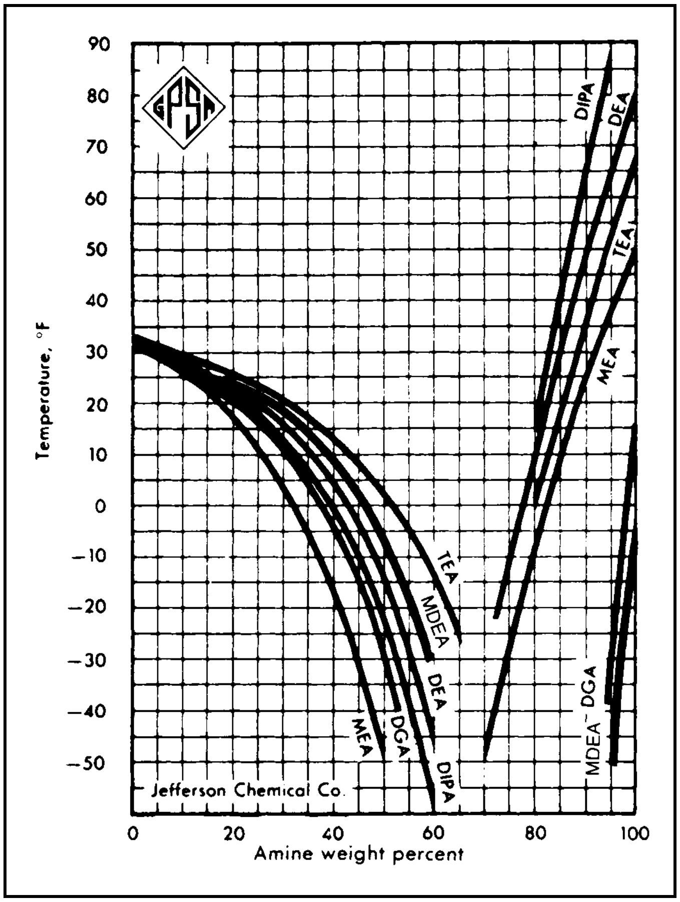

FIG. 21-8

Specific Gravity of Aqueous Amine Solutions

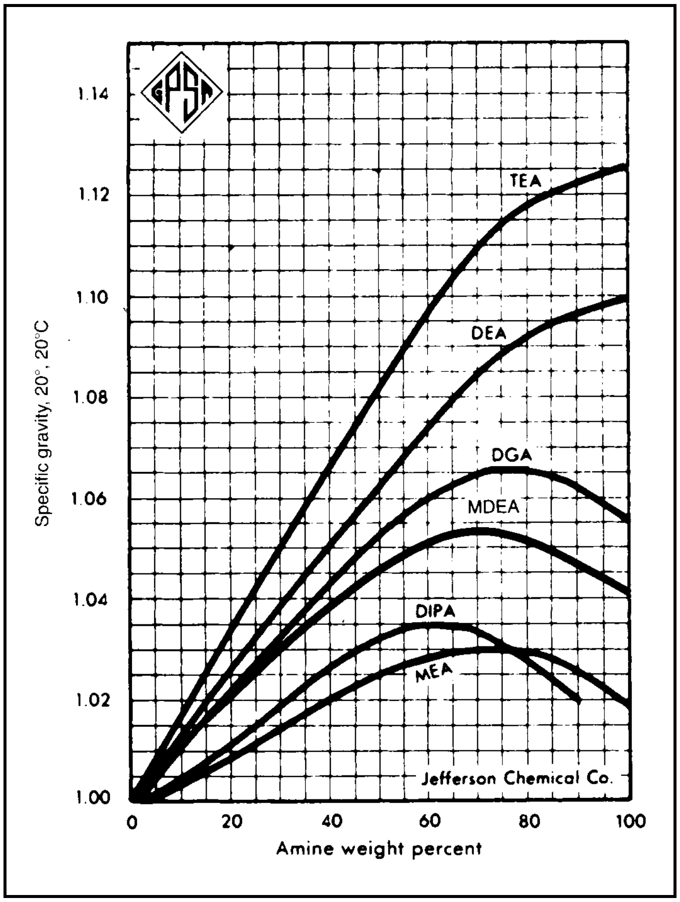

be carried over. The sweet gas leaving the contactor is saturated with water so dehydration, discussed in Section 20, is normally required prior to sale. If MEA is the sweetening agent, or the contactor is operating at unusually high temperature, a water wash may be used to attempt to recover some of the vaporized and/or entrained amine from the gas leaving the contactor. If a water wash is used it generally will consist of three or four trays at the top of the contactor, with makeup water to the unit being used as the wash liquid. Rich amine solution leaving the contactor flows through a flash drum to remove absorbed hydrocarbons or skim off. From the flash drum, the rich solution passes through the rich/lean exchanger where heat is absorbed from the lean solution. The heated rich amine goes to the mid portion of the stripper. As the solution flows down the column to the reboiler, it is stripped of H_2S and CO_2. The amine solution leaves the bottom of the stripper as lean solution. This lean solution is then passed through the rich/lean exchanger and a lean cooler to reduce the lean solution temperature to approximately 10°F warmer than the inlet gas temperature, to stay above the hydrocarbon dew point. At this point, the lean solution is returned to the contactor to repeat the cycle.

Acid gas stripped from the amine passes out of the top of the stripper. It goes through a condenser and separator to cool the stream and recover water. The recovered water is usually returned to the stripper as reflux. The acid gas from the reflux separator is either vented, incinerated, sent to sulfur recovery facilities, or compressed for sale or reinjected into a suitable reservoir for enhanced (see acid gas injection) oil recovery projects or for sequestration.

Reclaimer — A reclaimer is usually required for MEA and DGA® amine-based systems. The reclaimer helps remove degradation products from the solution and also aids in the removal of heat stable salts, suspended solids, acids and iron compounds. The reclaimers in MEA and DGA® systems differ. For MEA, a basic solution helps reverse the reactions. Soda ash and/or caustic soda is added to the MEA reclaimer to provide a pH of approximately 8-9; no addition is required for the DGA® reclaimer system. Reclaimers generally operate on a side stream of 1-3% of the total amine circulation rate.[11] Reclaimer sizing depends on the total inventory of the plant and the rate of degradation expected.

Reclaimer operation is a semi-continuous batch operation. The reclaimer is filled with hot amine solution and, if necessary, soda ash is added. As the temperature in the reclaimer increases, the liquid will begin to distill. Overhead vapors can be condensed and pumped back into the amine system, but generally the reclaimer is operated at slightly above stripper column pressure and the vapors are returned to the stripper. The initial vapor composition is essentially water. Continued distillation will cause the solution to become more and more concentrated with amine. This raises the boiling point of the solution and amine will begin to distill overhead. Fresh feed is continually added until the boiling point of the material in the reclaimer reboiler reaches 280° to 300°F. At this point, distillation is continued for a short time adding only water to help recover residual amine in the reclaimer reboiler. The reclaimer is then cleaned, recharged, and the cycle is repeated.[12]

Reclaimer "sludge" removed during cleaning must be handled with care. Disposal of the "sludge" must be in accordance with the governing regulations.

If needed a reclaiming company may be contracted to remove degradation products or heat stable salts from the amine. One type of reclaimer performs vacuum distillation on batches of spent amine mixed with sufficient caustic to neutralize the excess acidity. Another type of reclaimer uses ion exchange resin beds to remove heat stable salts.

Amines Used

Monoethanolamine — Gas sweetening with monoethanolamine (MEA) is used where there are low contactor pressures and/or stringent acid gas specifications. MEA removes both H_2S and CO_2 from gas streams. H_2S concentrations well below 4.0 ppmv can be achieved. CO_2 concentrations as low as 100 ppmv can be obtained at low to moderate pressures. COS and CS_2 are removed by MEA, but the reactions are irreversible unless a reclaimer is used. Even with a reclaimer, complete reversal of the reactions may not be achieved. The result is solution loss and build-up of degradation products in the system. Total acid gas pick up is traditionally limited to 0.3-0.35 moles of acid gas/mole of MEA and solution concentration is usually limited to 10-20 wt%. Inhibitors can be used to allow much higher solution strengths and acid gas loadings. Because MEA has the highest vapor pressure of the amines used for gas treating, solution losses through vaporization from the contactor and stripper can be high. This problem can be minimized by using a water wash.

Diethanolamine — This process employs an aqueous solution of diethanolamine (DEA). DEA will not treat to pipeline quality gas specifications at as low a pressure as will MEA.

Among the processes using DEA is the SNPA-DEA process developed by Societe Nationale des Petroles d'Aquitaine (today Total) to treat the very sour gas which was discovered in Lacq France in the 1950s. The original patents covered very high acid gas loading of 0.9 to 1.3 moles per mole of amine. This process is used for high pressure, high acid gas content streams having a relatively high ratio of H_2S/CO_2. The original process has been progressively improved and Total through Prosernat is now proposing high DEA solution concentrations up to 40 wt% with the high acid gas loading together with corrosion control by appropriate design and operating procedures.

Maximum attainable loading is limited by the equilibrium solubility of H_2S and CO_2 at the absorber bottoms conditions. Below are equilibrium solubility values for 40 wt% DEA solutions at 190°F

H_2S partial pressure (psia)	45	145	220
mole H_2S / mole amine	0.66	0.80	0.97
CO_2 partial pressure (psia)	45	90	145
mole CO_2 / mole amine	0.49	0.55	0.60

Although mole/mole loadings as high as 0.8-0.9 have been reported, most conventional DEA plants still operate at significantly lower loadings.

The process flow scheme for conventional DEA plants resembles the MEA process. The advantages and disadvantages of DEA as compared to MEA are:

- The mole/mole loadings typically used with DEA (0.35-0.82 mole/mole) are much higher than those normally used (0.3-0.4) for MEA.
- Because DEA does not form a significant amount of nonregenerable degradation products, a reclaimer is not required. Also, DEA cannot be reclaimed at reboiler temperature as MEA can.
- DEA is a secondary amine and is chemically weaker than MEA, and less heat is required to strip the amine solution.
- DEA forms a regenerable compound with COS and CS_2 and can be used for the partial removal of COS and CS_2 without significant solution losses.

Diglycolamine® — This process uses Diglycolamine® brand [2-(2-aminoethoxy)] ethanol in an aqueous solution. DGA® is a primary amine capable of removing not only H_2S and CO_2, but also COS and mercaptans from gas and liquid streams. Because of this, DGA® has been used in both natural and refinery gas applications. DGA® has been used to treat natural gas to 4.0 ppmv at pressures as low as 125 psig.[13] DGA® has a greater affinity for the absorption of aromatics, olefins, and heavy hydrocarbons than the MEA and DEA systems. Therefore, adequate carbon filtration should be included in the design of a DGA® treating unit.

The process flow for the DGA® treating process is similar to that of the MEA treating process. The three major differences are:

- Higher acid gas pick-up per gallon of amine can be obtained by using 50-60% solution strength rather than 15-20% for MEA (more moles of amine per volume of solution).
- The required treating circulation rate is lower. This is a direct function of higher amine concentration.
- Reduced reboiler steam consumption.

Typical concentrations of DGA® range from 50% to 60% DGA® by weight while in some cases as high as 70 wt% has been used. DGA® has an advantage for plants operating in cold climates where freezing of the solution could occur. The freezing point for 50% DGA® solution is –30°F. Because of the high amine degradation rate DGA® systems require reclaiming to remove the degradation product. DGA® reacts with both CO_2 and COS to form N, N′, bis (hydroxyethoxyethyl) urea, generally referred to as BHEEU.[14] DEA is recovered by reversing the BHEEU reaction in the reclaimer.

Methyldiethanolamine—Methyldiethanolamine (MDEA) is a tertiary amine which can be used to selectively remove H_2S to pipeline specifications at moderate to high pressure. If increased concentration of CO_2 in the residue gas does cause a problem with contract specifications or downstream processing, further treatment will be required. The H_2S/CO_2 ratio in the acid gas can be 10-15 times as great as the H_2S/CO_2 ratio in the sour gas. Some of the benefits of selective removal of H_2S include:

- Reduced solution flow rates resulting from a reduction in the amount of acid gas removed.
- Smaller amine regeneration unit.
- Higher H_2S concentrations in the acid gas resulting in reduced problems in sulfur recovery.

CO_2 hydrolyzes much slower than H_2S. This makes possible significant selectivity of tertiary amines for H_2S. This fact is used by several companies who provide process designs using

MDEA for selective removal of H_2S from gases containing both H_2S and CO_2.

A feature of MDEA is that it can be partially regenerated in a simple flash. As a consequence the removal of bulk H_2S and CO_2 may be achieved with a modest heat input for regeneration. However as MDEA solutions react only slowly with CO_2 (see chemistry) activators must be added to the MDEA solution to enhance CO_2 absorption and the solvent is then called activated MDEA.

Triethanolamine — Triethanolamine (TEA) is a tertiary amine and has exhibited selectivity for H_2S over CO_2 at low pressures. TEA was the first amine commercially used for gas sweetening. It was replaced by MEA and DEA because of its inability to remove H_2S and CO_2 to low outlet specifications. TEA has potential for the bulk removal of CO_2 from gas streams. It has been used in many ammonia plants for CO_2 removal.

Diisopropanolamine — Diisopropanolamine (DIPA) is a secondary amine which exhibits, though not as great as tertiary amines, selectivity for H_2S. This selectivity is attributed to the steric hindrance of the chemical.

Formulated Solvents and Mixed Amines — Formulated Solvents is the name given to a new family of amine-based solvents. Their popularity is primarily due to equipment size reduction and energy savings over most of the other amines. All the advantages of MDEA are valid for the Formulated Solvents, usually to a greater degree. Some formulations are capable of slipping larger portions of inlet CO_2 (than MDEA) to the outlet gas and at the same time removing H_2S to less than 4 ppmv. For example, under conditions of low absorber pressure and high CO_2/H_2S ratios, such as Claus tail gas clean-up units, certain solvent formulations can slip upwards to 90 percent of the incoming CO_2 to the incinerator. While at the other extreme, certain formulations remove CO_2 to a level suitable for cryogenic plant feed. Formulations are also available for CO_2 removal in ammonia plants. Finally, there are solvent formulations which produce H_2S to 4 ppmv pipeline specifications, while reducing high inlet CO_2 concentrations to 2% for delivery to a pipeline. This case is sometimes referred to as bulk CO_2 removal.

This need for a wide performance spectrum has led Formulated Solvent suppliers to develop a large stable of different MDEA-based solvent formulations. Most Formulated Solvents are enhancements to MDEA discussed above. Thus, they are referred to as MDEA-based solvents or formulations.

Benefits claimed by suppliers are:

For New Plants

- reduced corrosion
- reduced circulation rate
- lower energy requirements
- smaller equipment due to reduced circulation rates

For Existing Plants

- increase in capacity, i.e., gas through-put or higher inlet acid gas composition
- reduced corrosion
- lower energy requirements and reduced circulation rates

Formulated solvents are proprietary to the specific supplier offering the product. Companies offering these products and/or processes include INEOS, Huntsman Corporation, Dow Chemical Company, UOP, BASF, Shell Global Solutions and TotalFinaElf via Prosernat .

Sterically Hindered Amines — Other amines have been used to treat sour gas[15]. One specialty amine has been constructed by a process defined as steric hindrance (see the nomenclature for a definition). The actual structure of the amine has been formed to accommodate a specific process requirement. This type of amine and the associated technology is different than Formulated Solvents, which create the desired formulations by blending different components with a standard amine such as MDEA. An example of this technology is FLEXSORB® solvents, marketed by Exxon Mobil Research and Engineering Company.[16,17]

Simplified Design Calculations — A simplified procedure for making rough estimates of the principal parameters for conventional MEA, DEA and DGA® amine treating facilities when both H_2S and CO_2 are present in the gas is given below. It is based on excerpts from Jones and Pearce,[18] modified and extended by the Section 21 Subcommittee[19] in 2002. The procedure involves estimating the amine circulation rate and using it as the principal variable in estimating other parameters. For estimating amine circulation rate, the following equations are suggested:

For MEA:

$$\text{GPM} = 41 \bullet (Qy/x) \qquad \textbf{Eq 21-6}$$

(0.33 mol acid gas pick-up per mole MEA assumed)

For DEA (conventional):

$$\text{GPM} = 45 \bullet (Qy/x) \qquad \textbf{Eq 21-7}$$

(0.5 mol acid gas pick-up per mole DEA assumed)

For DEA (high loading):

$$\text{GPM} = 32 \bullet (Qy/x) \qquad \textbf{Eq 21-8}$$

(0.7 mol acid gas pick-up per mole DEA assumed)

For DGA®

$$\text{GPM} = 55.8 * (Qy/x) \qquad \textbf{Eq 21-9}$$

(0.39 mol acid gas pick-up per mole DGA® assumed)

(DGA® concentrations are normally 50-60% by weight)

Where:

Q = Sour gas to be processed, MMscfd
y = Acid gas concentration in sour gas, mole%
x = Amine concentration in liquid solution, wt%

After the amine circulation has been estimated, heat and heat exchange requirements can be estimated from the information in Fig. 21-9. Pump power requirements can be estimated from Fig. 21-10.

Eqs 21-6 to 21-9 normally provide conservative (high) estimates of required circulation rate. They should not be used if the combined H_2S plus CO_2 concentration in the gas is above 5 mole%. They also are limited to a maximum amine concentration of about 30% by weight.

The diameter of an amine plant contactor, can be estimated using the following equation:

$$D_c = 44 * \sqrt{Q / \sqrt{P}} \qquad \textbf{Eq 21-10}$$

Where:

Q = MMscfd gas to contactor

P = Contactor pressure is psia

D_c = Contactor diameter in inches before rounding up to nearest 6 inches.

Similarly, the diameter of the regenerator below the feed point can be estimated using the following equation:

$$D_r = 3.0 * \sqrt{GPM} \qquad \textbf{Eq 21-11}$$

Where:

GPM = Amine circulation rate in gallons per minute

D_r = Regenerator bottom diameter in inches

The diameter of the section of the still above the feed point can be estimated at 0.67 times the bottom diameter.

Example 21-2 — 30.0 MMscfd of gas available at 850 psig and containing 0.6% H_2S and 2.8% CO_2 is to be sweetened using 20%, by weight, DEA solution. If a conventional DEA system is to be used, what amine circulation rate is required, and what will be the principal parameters for the DEA treating system?

Solution:

Using Eq 21-7, the required solution circulation is:

GPM = 45(Qy/x) = 45(30 • 3.4/20) = 230 gallons of

20% DEA solution per minute.

Heat exchange requirements (from Fig. 21-9)

Reboiler

$H = 72{,}000 \bullet 230 = 16.6 \bullet 10^6$ Btu/hr

$A = 11.3 \bullet 230 = 2600$ ft^2

Rich-Lean amine exchanger

$H = 45{,}000 \bullet 230 = 10.4 \bullet 10^6$ Btu/hr

$A = 11.25 \bullet 230 = 2590$ ft^2

Amine cooler

$H = 15{,}000 \bullet 230 = 3.45 \bullet 10^6$ Btu/hr

$A = 10.2 \bullet 230 = 2350$ ft^2

Reflux condenser

$H = 30{,}000 \bullet 230 = 6.9 \bullet 10^6$ Btu/hr

$A = 5.2 \bullet 230 = 1200$ ft^2

Power requirements (Fig. 21-10)

Main amine pumps

HP = 230 • 850 • 0.00065 = 127

Amine booster pumps

HP = 230 • 0.06 = 14

Reflux pumps

HP = 230 • 0.06 = 14

Aerial cooler

HP = 230 • 0.36 = 83

Contactor diameter

$D_c = 44 * \sqrt{30 / \sqrt{865}}$ = 44.4 inches or 48 inches rounded up.

Regenerator diameter below feed point:

$Dr = 3.0 * \sqrt{230}$ = 45.5 inches or 48 inches (bottom) rounded up to nearest 6 inches.

Regenerator diameter above feed point:

$D_{ra} = 0.67 * 48$ = 32.2 inches or 36 inches (top) rounded up to nearest 6 inches.

FIG. 21-9

Estimated Heat Exchange Requirements

	Duty, Btu/hr	Area, Sq ft.
Reboiler (Direct fired)	72,000 • GPM	11.30 • GPM
Rich-Lean Amine HEX	45,000 • GPM	11.25 • GPM
Amine cooler (air cooled)	15,000 • GPM	10.20 • GPM
Reflux condenser	30,000 • GPM	5.20 • GPM

FIG. 21-10

Estimated Power Requirements

Main Amine Solution Pumps	GPM • PSIG • 0.00065	= HP
Amine Booster Pumps	GPM • 0.06	= HP
Reflux Pumps	GPM • 0.06	= HP
Aerial Cooler	GPM • 0.36	= HP

EQUILIBRIUM DATA FOR AMINE-SOUR GAS SYSTEMS

One of the peculiarities of amine treating systems is the interactive effects of one acid gas constituent with amine upon the equilibrium partial pressure of the other constituent. The most commonly encountered sour gas constituents are H_2S and CO_2. The capacity of a given amine for either one of the acid gas constituents alone is much greater than when the two occur together.

Jones et al.[20] have presented data to confirm the interactive effect of H_2S and CO_2 in monethanolamine solutions. Lee et al.[10,21] have presented similar data for diethanolamine solutions. Dingman et al.[22] have presented data for H_2S and CO_2 in equilibrium with commercially used concentrations of DGA®. These data provide the basis for predicting the equilibrium concentrations of MEA, DEA, and DGA® solutions when in contact with sour gases containing both H_2S and CO_2.

Jou, Otto, and Mather investigated the solubility of H_2S and CO_2 in MDEA and published data in 1981.[23] More recently they investigated the solubility of mixtures of H_2S and CO_2 in MDEA, and published data in 1986.[24] The first paper presents solubilities H_2S in MDEA and solubility of CO_2 in MDEA, whereas the second paper presents the results of varying mixtures of H_2S and CO_2 and their solubility in MDEA.

Kent and Eisenberg[25] proposed a reaction equilibrium model to correlate/predict the vapor-liquid equilibrium between H_2S and CO_2 and primary or secondary ethanolamines. They tested the model extensively against data for MEA and DEA with good results. This model allows for interpolation/extrapolation of equilibrium data to compositions and temperatures where no measurements have been made.

GPA reports on amine enthalpies of solution and acid gas equilibrium solubility are listed at the end of this chapter.

CAUSTIC WASH

Caustic (NaOH) scrubbing systems can be used to treat natural gas streams to remove CO_2, CS_2, H_2S, and mercaptans.[26]

The process employs countercurrent contacting of the gas stream with a caustic solution in a packed or trayed column. The column may contain one stage or several stages depending on the required degree of removal. The multi-stage systems generally have different caustic concentrations ranging from 4-6 weight percent in the first stage to 8-10 weight percent in the latter stages. Multiple stages increase the caustic efficiency while maintaining a sufficient driving force to achieve absorption.[27]

The spent solution is either regenerated or discarded depending on what acid gas components are present in the gas stream. If only mercaptans are present, the caustic solution is regenerated with steam in a stripping still. If CO_2 is present, a nonregenerable product (Na_2CO_3) is formed and the solution must be discarded. As a result, the presence of CO_2 in caustic systems leads to high caustic consumption. This is a serious disadvantage of the caustic scrubbing process. The spent caustic solutions are considered hazardous wastes.

Natural gas is usually water washed after a caustic wash to remove any caustic entrained in the gas prior to dehydration.

1. Chemistry

   The chemical reactions involved are as follows:

$$H_2S + NaOH \rightarrow NaSH + H_2O \qquad \textbf{Eq 21-12}$$

$$NaSH + NaOH \rightarrow Na_2S + H_2O \qquad \textbf{Eq 21-13}$$

$$H_2S + 2\,NaOH \rightarrow Na_2S + 2H_2O \qquad \textbf{Eq 21-14}$$

$$RSH + NaOH \rightarrow RSNa + H_2O \qquad \textbf{Eq 21-15}$$

$$CO_2 + 2\,NaOH \rightarrow Na_2CO_3 + H_2O \qquad \textbf{Eq 21-16}$$

$$CS_2 + 2\,NaOH \rightarrow 2\,NaHS + CO_2 \qquad \textbf{Eq 21-17}$$

2. Important physical properties including density, specific heat, solid/liquid phases, viscosity, and heat content are given in Figs. 21-11 through 21-13 A typical process flow diagram for a regenerative caustic treating process is shown in Fig. 21-14.

Although caustic soda dissolves in water to form solutions of high concentration, due account must be taken of the temperature at which these solutions separate solid hydrates. A number of these hydrates are formed which separate from solutions at definite temperatures and concentrations from –28°C to 64.3°C (–18.4°F to 147.7°F) and from 19% NaOH to about 74% NaOH. A detailed diagram of solid and liquid phases showing the temperature and concentration relations of NaOH and water is given in Fig. 21-11.

PHYSICAL SOLVENT PROCESSES

These processes are based on physical absorption and operate with a flow scheme as shown in Fig. 21-15. In general, a physical solvent process should be considered when:[28]

- The partial pressure of the acid gas in the feed is greater than 50 psi.
- The heavy hydrocarbon concentration in the feed gas is low.
- Bulk removal of the acid gas is desired.
- Selective removal of H_2S is desired.

These processes are economically attractive because little energy is required for regeneration. The solvents are regenerated by:

- Multi-stage flashing to low pressures.
- Regeneration at low temperatures with an inert stripping gas.
- Heating and stripping of solution with steam/solvent vapors.

In general, physical solvents are capable of removing COS, CS_2, and mercaptans.

In certain instances, physical absorption processes are capable of simultaneously dehydrating and treating the gas although additional equipment and higher energy requirements may be needed to dry the solvent. The processes operate at ambient or subambient temperature to enhance the solubility of the acid gases. The solvents are relatively noncorrosive so carbon steel can be used. Chemical losses are low due to low solvent vapor pressure or refrigerated conditions. Physical solvents will absorb heavy hydrocarbons from the gas stream resulting in high hydrocarbon content in the acid gas stream as well as possibly significant hydrocarbon losses.

Some of the physical absorption processes are summarized below.

Selexol®

This process developed by Allied Chemical Corp.[29,30] uses a polyethylene glycol derivative as a solvent. The solvent is selective for RSH, CS_2, H_2S, and other sulfur compounds. The process can be used to selectively or simultaneously remove sulfur compounds, carbon dioxide, water, as well as paraffinic, olefinic, aromatic and chlorinated hydrocarbons from a gas or air stream. Because water and heavy hydrocarbons are highly soluble in Selexol®, the treated gas from a Selexol® unit normally meets both water and hydrocarbon dew point specifications. The vendor states that the solvent is very stable, no degradation products are formed or disposed of, and no solvent reclaiming is required. Depending on the applications, the operating pressure could be as low as ambient though higher pressure is preferred. Operating temperature varies from 0°F to ambient. Selexol® is a Dow Chemical solvent and a UOP technology.

Fluor Solvent

This process patented by the Fluor Corporation, is based on the use of anhydrous propylene carbonate.[31] The temperature of the lean solution to the absorber is usually well below ambient, and some method of refrigerating the solvent is usually necessary.[32]

Rectisol Process®

This process uses pure refrigerated methanol as a solvent and has been developed and licensed by Lurgi Oel Gas Chemie

FIG. 21-11

Solubility of Pure NaOH in Water and Freezing Points of the Solutions

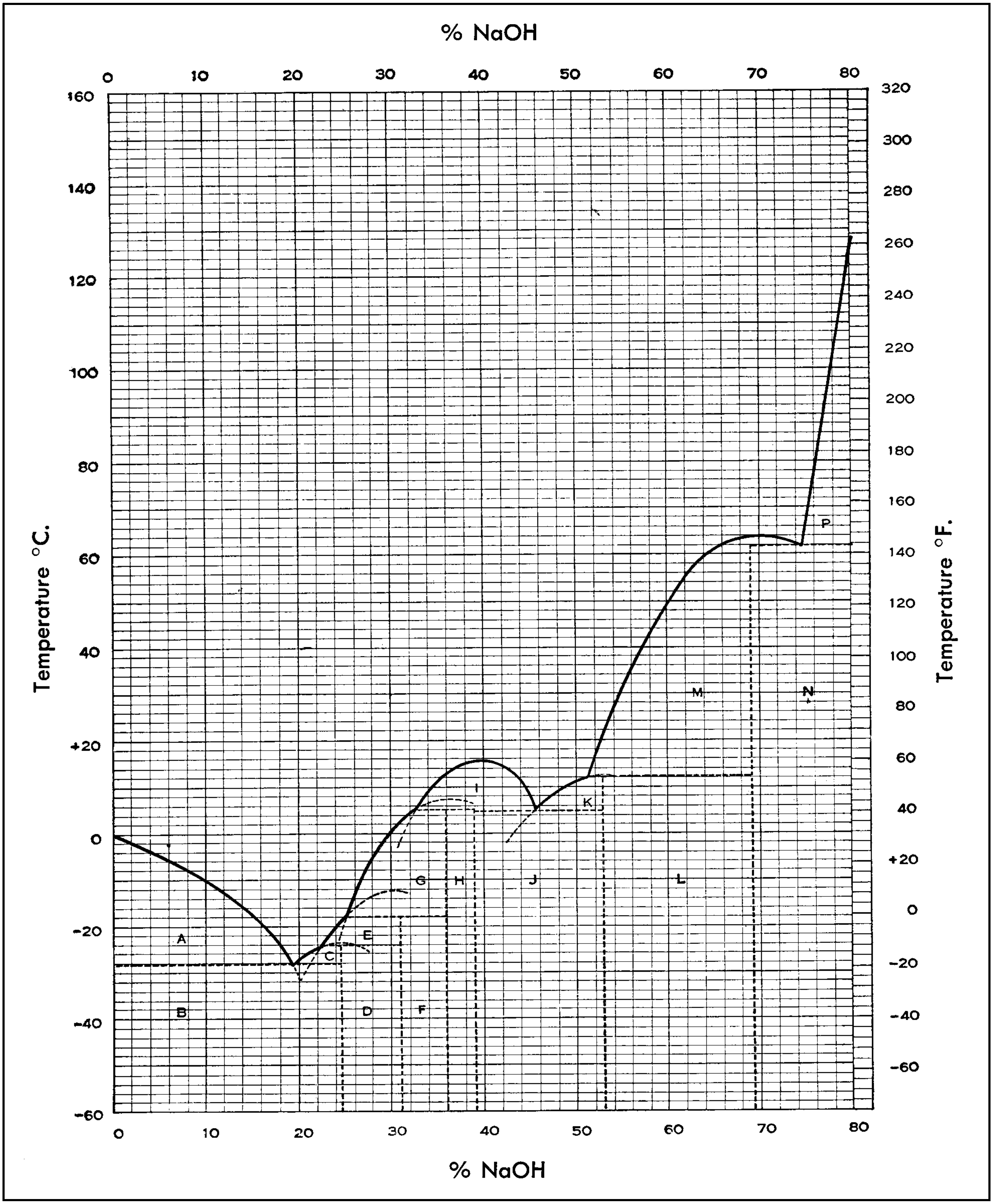

FIG. 21-12

Viscosity of Caustic Soda Solutions at Various Temperatures and Concentrations

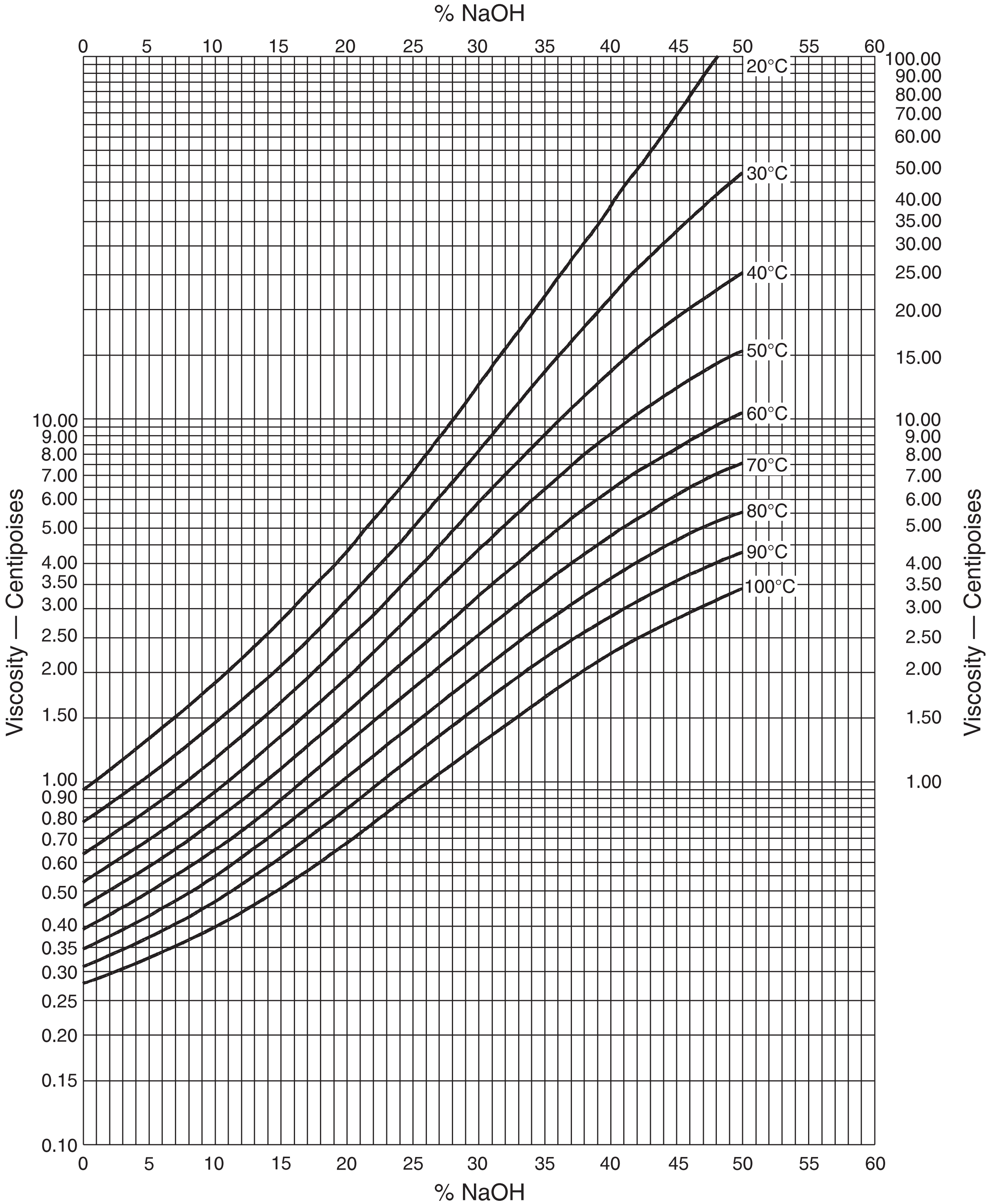

Data developed in the laboratory of The Solvay Process Division; the viscosities at 20°, 30° and 40° C, are from Hitchcock and McIlhemy, Ind. Eng. Chem. 27, 461 (1935) with which the Solvay determinations agree closely.

FIG. 21-13

Heat Content-Concentration Diagram for Caustic Soda Solutions

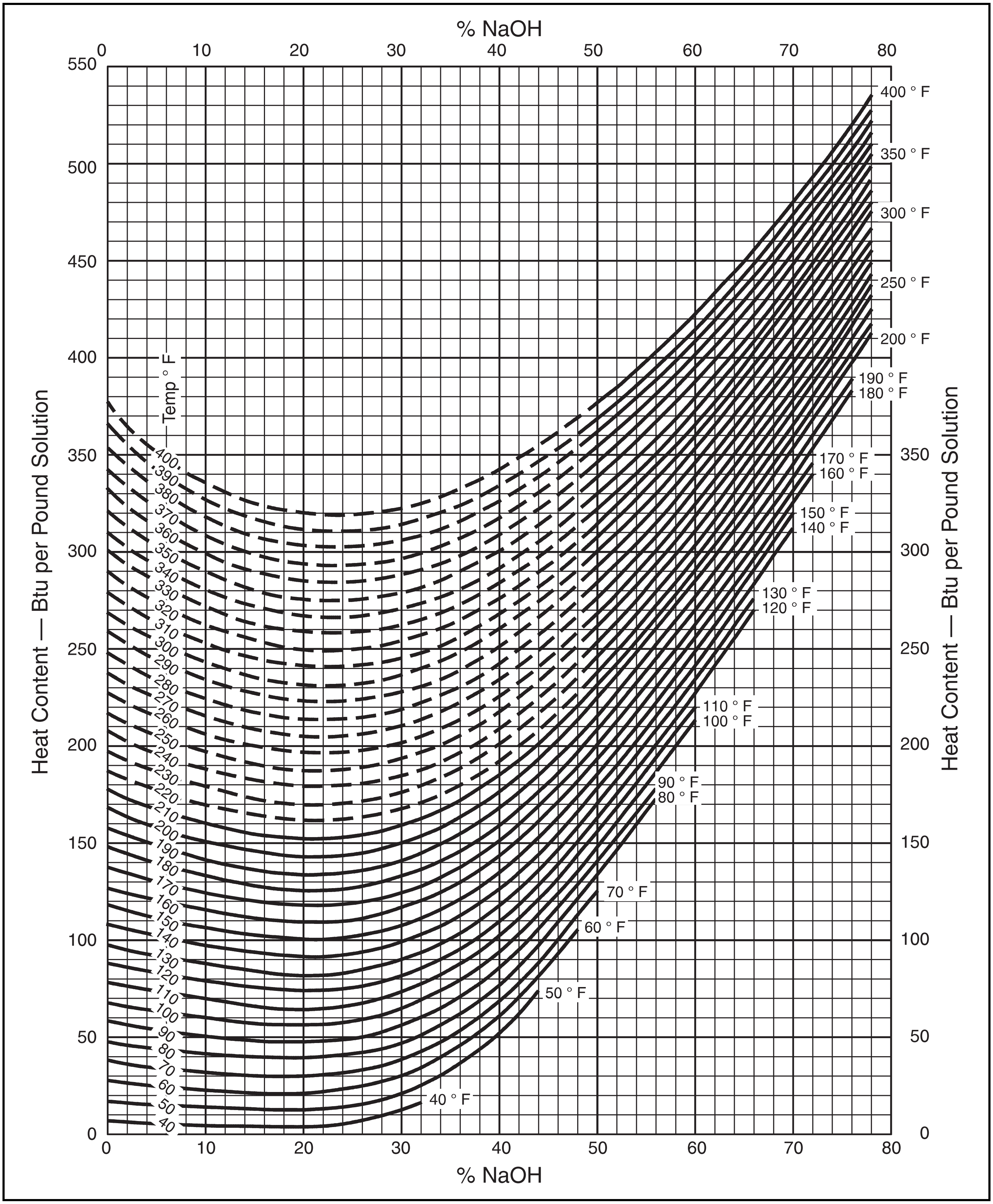

FIG. 21-14

Regenerative Caustic

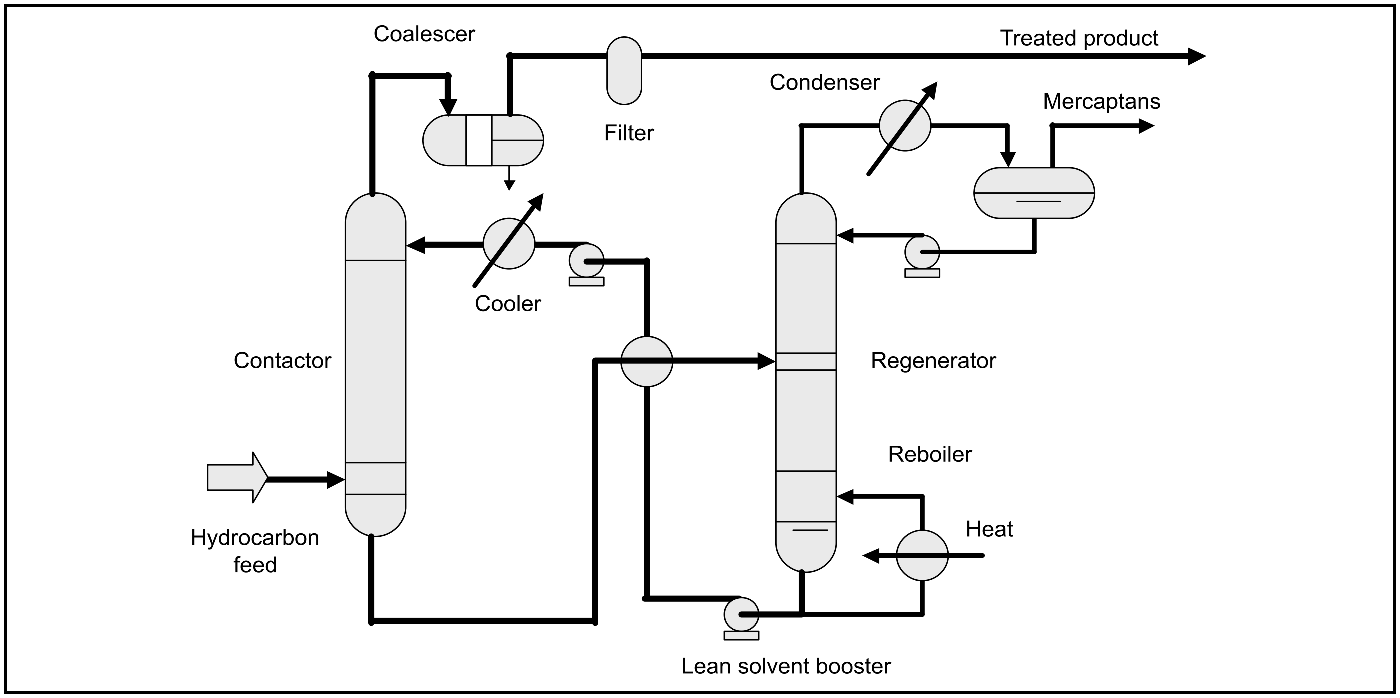

and Linde. The process is often applied for syngas purification and operates at temperatures as low as minus 30 to minus 100°F. Applications include selective or bulk removal of sour components. However the extremely low total sulfur impurities achievable with this process, down to less than 0.1 ppmv. are normally not required in natural gas service. Here the process is best suited where there are very high amounts of CO_2 to be removed.

The process has been applied for the purification of natural gas for LNG production. However as pure cold methanol exhibits a certain co-absorption of higher hydrocarbons, implementation of the process in natural gas service has been limited to applications where only low concentrations of ethane and heavier components are present.

Ifpexol Process®

This process developed by IFP licensed by Prosernat uses refrigerated methanol solutions containing water in order to reduce hydrocarbon co-absorption. It is generally associated downstream of the Ifpex-1 dehydration process (see Section 20) which simultaneously extracts heavier hydrocarbons. The Ifpex-2 process attains equivalent acid gas and mercaptans removal performance of the Rectisol process but at a slightly higher solvent rate due to the lower solvent purity.

Purisol®

This process has been developed and licensed by Lurgi Oel Gas Chemie[33]. The solvent used is N-methyl-2-pyrrolidone (NMP or N-Pyrol), a high boiling point liquid. Purisol exhibits a selectivity for H_2S, like Selexol, and features equivalent process possibilities.

As Purisol is also well suited for the selective removal of mercaptans; it can be used for the recovery of mercaptans from regeneration off gases from adsorptive mercaptan removal units.

Catasol®

This process is licensed by Eickmeyer and Associates. Catasol solvents are reported to have selectivity for H_2S/CO_2, CO_2/propane, and COS/CO_2.[34]

Morphysorb®

A physical solvent process developed by Krupp Uhde called Morphysorb[76], uses N-formyl morpholine (NFM) as a physical solvent. The process claims lower investment and operating costs when processing gases heavily loaded with acid components.

HYBRID SOLVENT PROCESSES

There are several gas treating processes which use the effects of both physical and chemical solvents. One of the earlier hybrid solvent processes developed by Lurgi was the Amisol process combining amines with methanol[35]. There are many hybrid solvent processes in the development stage (see Hybrisol in Emerging Technologies for example). Among the successfully proven technologies the most widely used is Sulfinol.

Sulfinol® Process

The Sulfinol® Process, licensed by Shell Global Solutions, is used to remove H_2S, CO_2, COS, CS_2, mercaptans and polysulfides from natural and synthetic gases. Sulfinol is a mixture of Sulfolane (a physical solvent), water and either DIPA or MDEA (both chemical solvents). It is this dual capacity as both a physical and a chemical solvent that gives Sulfinol its advantages. Sulfinol with DIPA (Sulfinol-D) is used when complete removal of H_2S, CO_2, and COS is desired. Sulfinol with MDEA (Sulfinol-M) is used for the selective removal of H_2S in the presence of CO_2, with partial removal of COS. Both Sulfinols can reduce the total sulfur content of treated gas down to low ppm levels. Some disadvantages are: a higher heavy hy-

FIG. 21-15

Typical Gas Sweetening by Physical Absorption

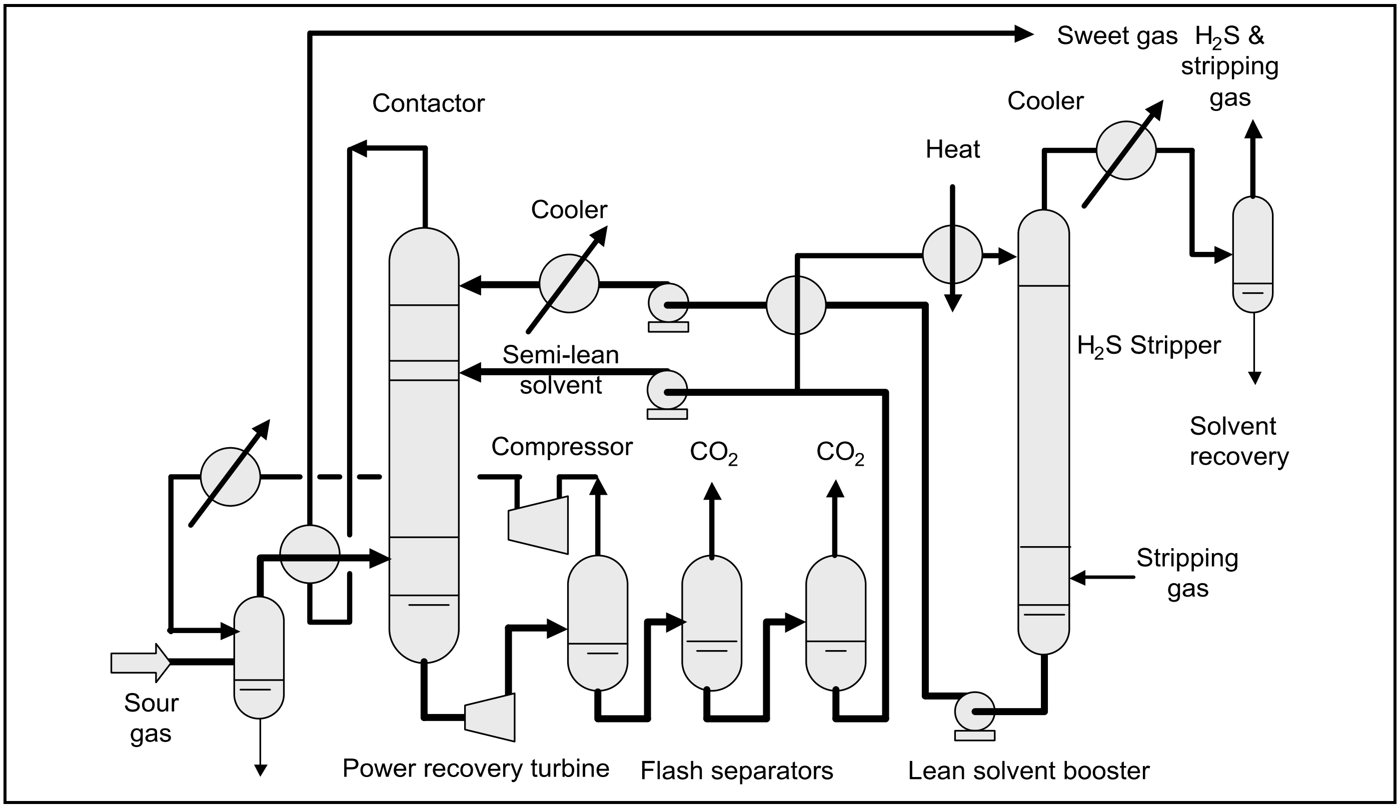

drocarbon co-absorption,[36] and a reclaimer is sometimes required for Sulfinol D when removing CO_2.

Selefining Process

This process developed by Snamprogetti uses tertiary amines such as dimethyl ethanol amine (DMEA) dissolved in an organic solvent with limited amounts of water. The process is very selective to H_2S as CO_2 hydration is almost completely avoided. It also removes other sulfur species such as mercaptans, COS and CS_2. It has a tendency to co-absorb hydrocarbons which can to some extent be controlled by increasing the water content of the solvent.

ALKALINE SALT PROCESS (HOT CARBONATE)

The basic process was developed by the U.S. Bureau of Mines and employs an aqueous solution of potassium carbonate (K_2CO_3). The contactor and stripper both operate at temperatures in the range of 230-240°F. The process is not suitable for gas streams containing only H_2S.[9] If H_2S is to be removed to pipeline specification or there are low CO_2 outlet specifications, special designs or a two-stage system may have to be used. Potassium carbonate processes are somewhat effective in removing carbonyl sulfide and carbon disulfide.

The overall reactions for CO_2 and H_2S with potassium carbonate can be represented by:

$$K_2CO_3 + CO_2 + H_2O \leftrightarrow 2\ KHCO_3 \qquad \textbf{Eq 21-18}$$

$$K_2CO_3 + H_2S \leftrightarrow KHS + KHCO_3 \qquad \textbf{Eq 21-19}$$

There are three basic process flow variations for the potassium carbonate process. The flow scheme required depends on the outlet specification of the natural gas. These are:

Single Stage Process

The single stage process is shown in Fig. 21-16. Potassium carbonate is pumped to the top of a packed or trayed contactor where it contacts the gas stream. The rich solution flows to the stripper where the acid gases are stripped with steam. The

FIG. 21-16

Alkaline Salt: Single-Stage Process

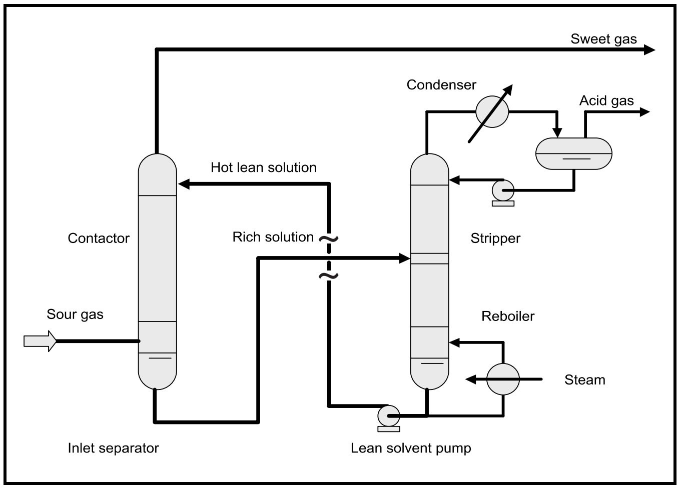

lean solution is then pumped back to the contactor to complete the cycle.

Split Flow Process

In this process scheme (Fig. 21-17) the lean solution stream is split. Hot solution is fed to the middle of the contactor for bulk removal. The remainder is cooled to improve equilibrium and is fed to the top of the contactor for trim acid gas removal.

Two Stage Process

In this process scheme (Fig. 21-18) the contactor is like that of the split flow process. In addition, the stripper is in two sections. A major portion of the solution is removed at the midpoint of the stripper and pumped to the lower section of the contactor. The remainder is further stripped with steam and then cooled prior to entering the top of the contactor.

Numerous improvements have been made to the potassium carbonate process resulting in significant reduction in capital and operating costs. At the same time, lower acid gas concentration in the treated gas can now be achieved. The most popular of the carbonate processes are:

FIG. 21-17

Alkaline Salt: Split-Flow Process

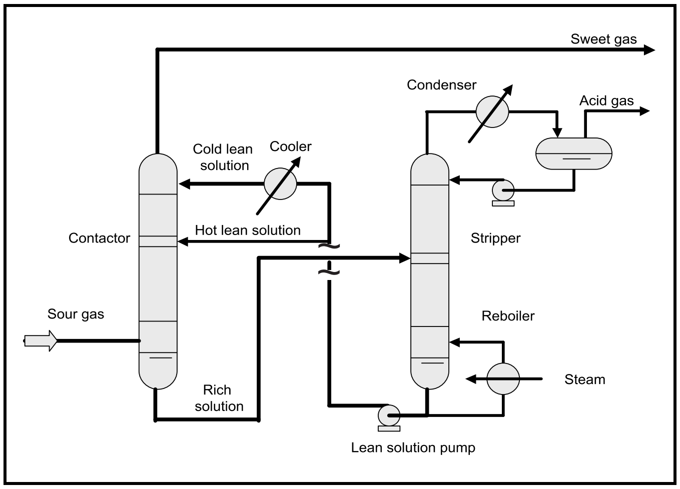

FIG. 21-18

Alkaline Salt: Two-Stage Process

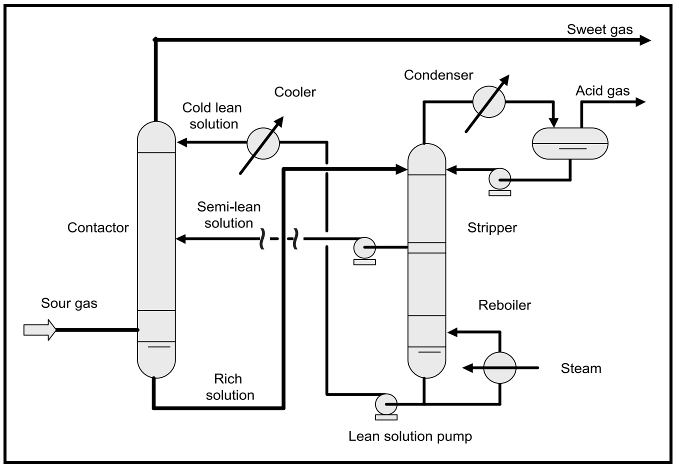

Benfield Process

The Benfield Process is licensed by UOP. Several activators are used to enhance the performance of the potassium carbonate solution.

Hi-Pure Process

The Hi-Pure process is a combination conventional Benfield potassium carbonate process and alkanolamine process. The gas stream is first contacted with potassium carbonate followed by contacting with an amine. The process can achieve outlet CO_2 concentrations as low as 30 ppmv and H_2S concentrations of 1 ppmv.[37]

Catacarb Process

The Catacarb Process is licensed by Eickmeyer and Associates. Activators, corrosion inhibitors, potassium salts, and water are contained in the solution. This process is mostly used in the ammonia industry.

GENERAL CONSIDERATIONS FOR SOLVENT PROCESS

Solution Filtration

Filtration of the treating solution to remove entrained solids is essential to the successful operation of a gas treating plant. Filtration rates should be as high as practical and may range from 5 per cent of circulation to full stream. Removing particles down to 5 microns in size is recommended. In order to do this efficiently, two stages of filtration may be required. The first stage, typically a cartridge-type or precoat filter, is designed to remove particles down to the 10 micron or less range. The second stage of filtration, typically an activated carbon filter, removes hydrocarbons and other contaminants. This is accomplished by adsorption. The carbon filter can also remove smaller particles from the amine stream. The carbon granule size can be selected to remove particles down to the 5 micron range. The activated carbon filter should always be located downstream of the first stage filter because the deposition of solids would plug the carbon filter.[38]

The carryover of carbon fines can be controlled by either locating a second cartridge-type filter immediately downstream of the carbon filter or using a graded carbon bed. In a graded bed, larger granules are placed at the outlet of the filter to trap fines. Large carbon granules produce fewer fines but are less efficient for adsorption.

Basic degradation products are identified by gas chromatography and mass spectrometry. Acidic degradation products are identified by ion chromatography exclusion. These tests are recommended when the amine solution appears to lose its ability to pick up acid gas. Degradation products affect the results of the conventional estimation of amine concentration by titration. This may cause artificially high or low apparent amine concentrations Also, the carbon bed will adsorb very little strong acid degradation products. In this case, purging or reclamation of the solution is recommended.

Carbon filters can be partially regenerated with steam, which removes hydrocarbons and other adsorbed contaminants. Regeneration or bed change out is recommended when foam tests on the inlet and outlet streams show no improvement. This indicates carbon bed saturation.

Filters may be located on the lean or rich solution side. Filtration on the rich side seeks to remove particles that are more insoluble under the rich solution conditions. It also prevents solids accumulation in the hot environment of the stripper. However, proper design and operating procedures for personnel protection during filter maintenance is mandatory when H_2S may be present.

Filtration equipment should be used continuously beginning with the first day of plant operations. When starting up the plant, the full flow filter, even if temporary, may prove its worth by removing the scale and other solid particles and allowing much quicker and easier start-up of the plant.

Flash Tank

Rich solution leaving the contactor may pass through a flash tank. A flash tank is more important when treating high pressure gas. Gases entrained in the rich solution will be separated. In addition, the amount of absorbed gas will be decreased because of the lower operating pressure of the flash tank. Using a flash tank will:

- Reduce erosion in rich/lean exchangers.
- Minimize the hydrocarbon content in the acid gas.
- Reduce the vapor load on the stripper.
- Possibly allow the off-gas from the flash tank to be used as fuel (may require sweetening).

When heavy hydrocarbons are present in the natural gas, the flash tank can also be used to skim off the heavy hydrocarbons that were absorbed by the solution. Residence times for flash tanks in amine service vary from 3-10 minutes depending on separation requirements. Inlet gas streams containing only methane and ethane require shorter residence times. Rich gas streams require longer time for the dissociation of gas from solution and/or the separation of liquid phases.

Corrosion

Corrosion is an operating concern in nearly all sweetening installations. The combination of H_2S and CO_2 with water practically ensures that corrosive conditions will exist in portions of the plant. In general, gas streams with high H_2S to CO_2 ratios are less corrosive than those having low H_2S to CO_2 ratios. H_2S concentrations in the ppmv range with CO_2 concentrations of 2 percent or more tend to be particularly corrosive. Because the corrosion in sweetening plants tends to be chemical in nature, it is strongly a function of temperature and liquid velocity. The type of sweetening solution being used and the concentration of that solution has a strong impact on the corrosion rate. Increased corrosion can be expected with stronger solutions and higher gas loadings.

Hydrogen sulfide dissociates in water to form a weak acid. The acid attacks iron and forms insoluble iron sulfide. The iron sulfide will adhere to the base metal and may provide some protection from further corrosion, but it can be eroded away easily, exposing fresh metal for further attack.

CO_2 in the presence of free water will form carbonic acid. The carbonic acid will attack iron to form a soluble iron bicarbonate which, upon heating, will release CO_2 and an insoluble iron carbonate or hydrolize to iron oxide. If H_2S is present, it will react with the iron oxide to form iron sulfide.

High liquid velocities can erode the protective iron sulfide film with resulting high corrosion rates. In general, design velocities in rich solution piping should be 50% of those that would be used in sweet service. Because of the temperature relationship to corrosion, the reboiler, the rich side of the amine-amine exchanger, tend to experience high corrosion rates. Because of the low pH the stripper overhead condensing loop also tends to experience high corrosion rates.

Acid degradation products also contribute to corrosion. A suggested mechanism for corrosion is that degradation products act as chelating agents for iron when hot. When cooled, the iron chelates become unstable, releasing the iron to form iron sulfide in the presence of H_2S. Primary amines are thought to be more corrosive than secondary amines because the degradation products of the primary amines act as stronger chelating agents.

Several forms of stress corrosion cracking are possible in amine sweetening systems. Amine stress corrosion cracking can occur and is worst in hot solutions, but cracking can occur in cooler lines and both rich and lean streams. Post-weld heat treatment (PWHT) can prevent this type of cracking.[39] Wet sulfide cracking and blistering can occur due to hydrogen generated in corrosion reactions. The hydrogen can collect at small inclusions in the steel which delaminate and then link in a step-wise pattern to create blisters. This is called HIC or hydrogen induced cracking. Sometimes stress influences the cracking to cause SOHIC or stress oriented hydrogen induced cracking. PWHT helps, but does not prevent HIC and SOHIC. HIC resistant steels are available. Seamless pipe is less prone to HIC than plate steels.

Corrosion in alkaline salt processes, such as the hot carbonate process, has been reported to range from none to severe. Corrosion can be expected where CO_2 and steam are released through flashing. Severe erosion can take place when carbonate solution strengths exceed 40% because of the tendency to form bicarbonate crystals when the solution cools.

Many corrosion problems may be solved using corrosion inhibitors in combination with operating practices which reduce corrosion. Following are some guidelines to minimize corrosion.

- Maintain the lowest possible reboiler temperature.
- If available, use low temperature heat medium rather than a high temperature heat medium or direct firing. When a high temperature heat medium or direct firing for the reboiler is used, caution should be taken to add only enough heat for stripping the solution.
- Minimize solids and degradation products in the system through reclaimer operation and effective filtration.
- Keep oxygen out of the system by providing a gas blanket on all storage tanks and maintain a positive pressure on the suction of all pumps.
- Ensure deionized water or oxygen/chemical-free boiler condensate is used for make up water. If available, steam can be used to replace water loss.
- Limit solution strengths to minimum levels required for treating.
- Pipe solution exchangers for upflow operation with the rich solution on the tube side.
- Monitor corrosion rates with coupons or suitable corrosion probes.
- Maintain adequate solution level above reboiler tube bundles and fire tubes; a minimum tube submergence of 12" is recommended.

Corrosion inhibitors used include high molecular weight amines and heavy metal salts. The compositions are generally proprietary. Certain inhibitors are available when only H_2S or CO_2 is in the gas which allow increased solution strengths and acid gas loadings. These inhibitors offer potential savings in both capital and operating costs for these special cases. An example of this type inhibitor use is in ammonia plants.

Foaming

A sudden increase in differential pressure across a contactor or a sudden liquid level variation at the bottom of the contactor often indicates severe foaming. When foaming occurs, there is poor contact between the gas and the chemical solution. The result is reduced treating capacity and sweetening efficiency, possibly to the point that outlet specification cannot be met.

Some reasons for foaming are:[11]

- Suspended solids
- Organic acids
- Corrosion inhibitors
- Condensed hydrocarbons
- Soap-based valve greases
- Makeup water impurities
- Degradation products
- Lube Oil

Foaming problems can usually be traced to plant operational problems. Contaminants from upstream operations can be minimized through adequate inlet separation. Condensation of hydrocarbons in the contactor can usually be avoided by maintaining the lean solution temperature at least 10°F above the hydrocarbon dew point temperature of the outlet gas.

Temporary upsets can be controlled by the addition of antifoam chemicals. These antifoams are usually of the silicone or long-chain alcohol type.

The following test for foaming should be run with the various types of inhibitors being considered for a given application.[40] This test should give the operator an indication of which antifoam will be the most effective for the particular case. Place several drops of antifoam in 200 ml of treating solution contained in a 1000 ml cylinder. Bubble oil-free air through the solution at a constant rate. After five minutes have elapsed shut off the air and start a timer. Note the height of foam at the time the air was shut off and the amount of time required for the foam to break. The foam height is the difference between the height of the foam and the initial height of the liquid. The time for the foam to break is an indication of the stability of the foam. A comparison of antifoams will let the operator select which inhibitor will best solve his foaming problems. Between antifoam tests, care should be taken to clean the test cylinder thoroughly because a very small amount of inhibitor may affect the test.

Materials

Treating plants normally use carbon steel as the principal material of construction. Vessels and piping should be stress relieved in order to minimize stress corrosion along weld seams. Corrosion allowance for equipment ranges from 1/16" to 1/4", typically 1/8". In some instances, when corrosion is known to be a problem, or high solution loadings are required, stainless steel or clad stainless steel may be used in the following critical areas:

1. Reflux condenser
2. Reboiler tube bundle
3. Rich/lean exchanger tubes
4. Bubbling area of the contactor and/or stripper trays.
5. Rich solution piping from the rich/lean exchanger to the stripper.
6. Bottom 5 trays of the contactor and top 5 trays of stripper, if not all.

Usually 304, 316, or 410 stainless steel will be used in these areas, even through corrosion has been experienced with 410 stainless in DEA service for CO_2 removal in the absence of H_2S. L grades are recommended if the alloys are to be welded.

Controlling oxygen content to less than 0.2 ppmw is effective in preventing chloride SCC in waters with up to 1000 ppmw chloride content, at temperatures up to 570°F. There has been an increased use of duplex stainless steels, and they have been successfully used in the water treatment industry to prevent chloride SCC in high chloride waters. This suggests duplex stainless steels could be utilized in amine plant service where high chloride content is expected. As with any specialty steel, proper fabrication techniques and welding procedures are required.

BATCH AND CYCLIC PROCESSES

In this section, processes having chemical reactions and/or physical adsorption are discussed. They all have the common requirement that the process be operated as a batch or cyclic system. At the end of the cycle the operator must either change solution or regenerate in order to continue treating.

Under this heading the following process classification is considered:

- Scavenger or sacrificial processes with liquid or solid sacrificial scavenging agents
- Adsorption processes, including cyclically regenerated adsorbents such as molecular sieves and non-regenerated impregnated activated carbon.

Scavenger Processes

Scavengers are chemicals which react with H_2S and sometimes other sulfur compounds like COS or mercaptans. Generally the spent product is not or cannot be regenerated so the use of scavengers is limited to the removal of small quantities of sulfur impurities.

Liquid scavengers can be applied on a continuous or batch mode while solid scavengers are used in a batch mode. In the continuous mode the liquid scavenger is injected into the gas stream after separation of liquid hydrocarbons and water. After mixing, usually through a static mixer or an atomizing device, a few seconds contact time is provided by a length of pipe for the chemical reaction to occur. The mixture is then separated in a coalescing filter and the resultant liquid product is discarded.

In the batch mode the gas is passed through a vessel filled with liquid or solid scavenger agent. The batch mode has a higher scavenger utilization efficiency but a much higher capital cost.

Numerous liquid chemicals, typically triazines, and solid scavengers are commercially available. Some of these are described below, starting with liquid scavengers.

Sulfa-check—Sulfa-Check is a product of ExxonMobil Chemicals which selectively removes H_2S and mercaptans from natural gas in the presence of CO_2. The original process was developed and marketed by NL Treating Chemicals / NL Industries Inc. The patented process converts the sour gas directly to sulfur. This is accomplished by sparging the gas in a buffered , water based oxidizing solution containing sodium nitrite ($NaNO_2$).The sodium nitrite is reduced to ammonia

(NH_3) which remains in solution. The spent product is classified as non-hazardous.

The sparging vessel is similar to the vessel used in other batch processes such as Iron Sponge etc. Dozens of field applications include gas rates ranging from 15 Mscf/d to 3.0 MMscf/d and inlet H_2S concentrations ranging from 10 to 3000 ppmv.[41]

A number of variables, including some associated risks must be considered prior to determining if the Sulfa-Check process is applicable. For example, low levels of ammonia may appear in the treated gas. Also, the reduction of NO_2 may result in the formation of nitric oxide (NO). If air is present in the raw gas, it will react with nitric oxide to form nitrogen dioxide (NO_2). NO_2 is a strong oxidizing agent that will react with elastomers and odorants and cause corrosion in a moist environment. It is recommended that ExxonMobil be consulted for further information.

Sulfa-Scrub—Sulfa-Scrub from Baker-Petrolite is a product that uses triazine compound to selectively react with H_2S. The raw gas can be sparged into a vessel containing the liquid scavenging agent. Alternatively the liquid may be injected to the gas stream as an H_2S scavenger. The spent material is considered as non-hazardous and is claimed to be an excellent corrosion inhibitor[42].

Iron-Sponge Process—The iron sponge process selectively removes H_2S from gas or liquid streams. The process is limited to treating streams containing low concentrations of H_2S at pressures ranging from 25 to 1200 psig. The process employs hydrated iron oxide, impregnated on wood chips.

Care must be taken with the iron sponge bed to maintain pH, gas temperature, and moisture content to prevent loss of bed activity. Consequently, injections of water and sodium carbonate are sometimes needed. H_2S reacts with iron oxide to form iron sulfide and water. When the iron oxide is consumed, the bed must be changed out or regenerated. The bed can be regenerated with air; however, only about 60% of the previous bed life can be expected.[43] The bed life of the batch process is dependent upon the quantity of H_2S, the amount of iron oxide in the bed, residence time, pH, moisture content, and temperature.

The change-out of the spent sponge beds is hazardous. Iron sulfide is pyrophoric when exposed to air will rapidly oxidize and can result in spontaneous combustion of the spent bed. To prevent this, the entire bed should be wetted before beginning the change-out operation. Regulations on sponge disposal vary with location; therefore, local regulations on allowable methods of disposal should be checked.

Chemsweet®—Chemsweet® is the name for another batch process for the removal of H_2S from natural gas. Chemicals used are a mixture of zinc oxide, zinc acetate, water, and a dispersant to keep solid particles in suspension. Natural gas is bubbled through the solution where H_2S reacts with zinc oxide.

Though several reactions take place in solution, the net result is that zinc oxide reacts with H_2S to form zinc sulfide and water.

Chemsweet® can treat gas streams with H_2S concentration up to 400 ppmv. and has been operated between pressures of 75 and 1,400 psig.[44] Mercaptan concentrations in excess of 10% of the H_2S concentration in the gas stream can cause a problem. Some of the mercaptans will react with the zinc oxide and be removed from the gas. The resulting zinc mercaptides [Zn(OH)RH] will form a sludge and possibly cause foaming problems.

SulfaTreat™—SulfaTreat™ is a patented process of the SulfaTreat Company which has been licensed to GSA Technologies, Inc. The material is a dry, free-flowing granular substance used for selective removal of H_2S and mercaptans from natural gas in the presence of CO_2. It is not affected by CO_2, and it does not produce sulfur or nitric oxide (NO_x). Also SulfaTreat will not ignite or "cement up" in the vessel. Other advantages include longer bed life and lower cost.

SulfaTreat's particle size varies from 4 to 30 mesh and has a bulk density of 70 lb/ft^3. These physical properties give uniform porosity and permeability, which offers small resistance to flow and resistance to bed compression at normal velocities.

Applications for SulfaTreat include: natural gas treating, amine treater off gas, high concentration CO_2 streams, geothermal noncondensible gas, and any other H_2S-containing system.

PuraSpec™—Johnson Matthey Catalysts supplies the PuraSpec range of processes and products for desulfurisation of hydrocarbon gases and liquids. The processes use fixed beds of granular, metal oxide-based chemical absorbents which are developments of the 'high temperature zinc oxide' used for purification of hydrocarbon feedstocks to steam reformers in ammonia, hydrogen, and methanol plants. PuraSpec absorbents are effective at temperatures down to 32°F, so no added heat is necessary, and are in service at pressures from atmospheric, treating vent gases, to 1800 psi treating dense phase gas feed to a gas processing plant.

PuraSpec units are in service treating natural gas to pipeline or petrochemical specifications.[45,46] Because the absorbents remove H_2S and COS irreversibly, they are best suited to polishing duties. In large scale applications this can be removal of up to 50 ppmv or 200-400 lbs per day of sulfur. Liquid treating applications include removal of H_2S/COS from propane/LPG to meet copper strip test specifications. Spent absorbents are normally sent to metals refineries where they can be treated as high-grade ores for metals recovery. PuraSpec™ is a trademark of Synetix, a Johnson Matthey company.

Adsorption Processes

Adsorption is also used to remove H_2S, CO_2 and other sulfur contaminants from natural gases. Adsorbents used are either regenerated such as molecular sieves or not regenerated such as impregnated activated carbon.

Molecular Sieve—Molecular sieves can be used for removal of sulfur compounds from gas streams (Fig. 21-19). Hydrogen sulfide can be selectively removed to meet 0.25 grain/100 scf specification. The sieve bed can be designed to dehydrate and sweeten simultaneously. In addition, molecular sieve processes can be used for CO_2 removal.

In general, the concentrations of acid gas are such that cycle times are in the order of 6-8 hours. To operate properly the sieves must be regenerated at a temperature close to 600°F for a long enough period of time to remove all adsorbed materials, usually one hour or more. Exact arrangement of the regeneration cycle depends upon process conditions.

Regeneration of a molecular sieve bed concentrates the H_2S into a small regeneration stream which must be treated or disposed of. During the regeneration cycle, the H_2S will exhibit a peak concentration in the regeneration gas. The peak is ap-

FIG. 21-19

Integrated Natural Gas Desulfurization Plant

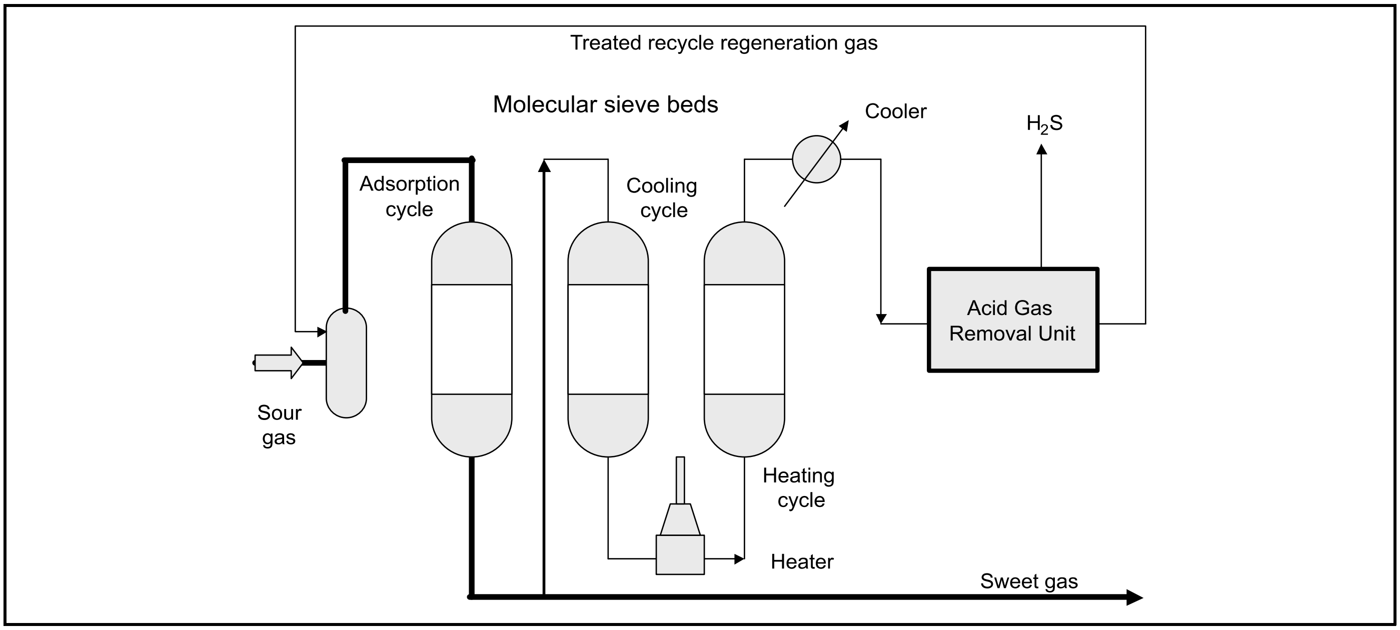

proximately 30 times the concentration of the H_2S in the inlet stream. Knowing the concentration of this stream is essential for the design of a gas treater for the regeneration gas.

The problem of COS formation during processing according to the reaction:

$$H_2S + CO_2 \leftrightarrow COS + H_2O \qquad \textbf{Eq 21-20}$$

has been extensively studied. Molecular sieve products have been developed that do not catalyze COS formation.[47] The central zone in the regeneration cycle is most favorable to COS formation.

Operation of adsorbent plants is simple, but design is complex. For example a dust filter is generally required downstream of the beds to ensure that fine solid particles are not entrained into the treated gas. Manufacturers must be consulted for potential applications. Refer to Dehydration (Section 20) and the gasoline and LP-gas treating portion of this section for additional details.

Oxorbon—Oxorbon is an alternative solid bed material which consists of activated carbon impregnated with potassium iodide (KI). Donau Carbon markets such a carbon for the removal of H_2S and mercaptans. The adsorbed H_2S is converted to elemental sulfur by catalytic reaction under the presence of oxygen. The resulting sulfur is fixed on the pores of the activated carbon. Sulfur loadings as high as 60% of the carbon mass have been reported and sulfide concentrations below 1 ppmv are claimed.

LIQUID REDOX PROCESSES

Processes in this group absorb H_2S from gas streams and produce elemental sulfur by reacting oxidizing/reducing agents with the H_2S to form elemental sulfur and water.[48]

The redox agent is then regenerated by reaction with air in an oxidizer vessel.

Liquid redox sulfur recovery processes all share the following major steps:[49]

- Sour gas cleaning by absorption of H_2S into a circulating alkaline solution.
- Conversion of the formed HS to elemental sulfur via the action of an auxiliary redox reagent (ARR).
- Separation and recovery of solid sulfur.
- Regeneration of the spent auxiliary reagent via reaction with oxygen dissolved in the solution.

The processes share the general chemistry shown below.[49]

- H_2S absorption using an alkaline solution:

$$H_2S_{(g)} \leftrightarrow H_2S_{(sol'n)} \qquad \textbf{Eq 21-21}$$

$$H_2S_{(sol'n)} \leftrightarrow H^+ + HS^- \qquad \textbf{Eq 21-22}$$

Note that this is a non-selective, basic scrubbing solution; thus, additional acidic components (CO_2, HCN) of the sour gas will be soluble in the scrubbing solution. While CO_2 is partially absorbed in the alkaline solution, it does not participate in the redox reactions. CO_2 may however increase the rate of consumption of caustic or buffering compounds. The fate of other reduced sulfur species (COS, CS_2, RSH, RSR) depends on the particular process being considered.

- Conversion to Elemental Sulfur:

$$HS^- + H^+ + \tfrac{1}{2} O_{2\,(sol'n)} \rightarrow H_2O_{(l)} + \tfrac{1}{8} S_8 \qquad \textbf{Eq 21-23}$$

Note that in the absence of an ARR the reaction shown as Eq 21-24 is slow and nonspecific. The addition of an auxiliary redox reagent (ARR) increases the rate of reaction and directs the oxidation to elemental sulfur. The reaction shown as Eq 21-25 is common to all processes considered.

$$HS^- + ARR_{(OX)} \rightarrow \tfrac{1}{8} S_8 + H^+ + ARR_{(RED)} \qquad \textbf{Eq 21-24}$$

where (OX) denotes the oxidized form and (RED) denotes the reduced form of the ARR.

- Regeneration of the Spent ARR Using Air:

$$O_{2\,(g)} \leftrightarrow O_{2\,(sol'n)} \qquad \textbf{Eq 21-25}$$

$$ARR_{(RED)} + \tfrac{1}{2} O_{2\,(sol'n)} + 2\,H^{+} \rightarrow ARR_{(OX)} + H_2O_{(l)} \qquad \textbf{Eq 21-26}$$

The overall simplified chemistry of liquid redox processes is thus:

$$H_2S_{(g)} + \tfrac{1}{2} O_{2\,(g)} \rightarrow H_2O_{(l)} + \tfrac{1}{8} S_8 \qquad \textbf{Eq 21-27}$$

Because they share major process operations and are based on similar process chemistries, the process flow sheets and equipment requirements for liquid redox systems are rather similar.

Stretford Process

The Stretford process was developed by British Gas PLC. It involves the use of vanadium salts as the ARR. The process has been extensively used in Europe[48]. However environmental concerns around the discharge of vanadium compounds has limited its use.

IRON CHELATE PROCESSES

Chelates are the most commonly used auxiliary redox reagents. A chelating agent is generally an organic molecule which is able to bind with a metallic cation in such a way that the cation is sequestered from the solution. To illustrate, consider the case of iron compunds. Fe(III) is capable of oxidizing H_2S to sulfur, with subsequent formation of Fe(II). Fe(II) is easily oxidized by air back to Fe(III). However, both forms of unsequestered iron will form precipitates with the sulfides or oxides in solution, thereby rendering it ineffective. By chelating the iron with a compound like ethylenediaminetetraacetic acid EDTA, the iron will not precipitate, but is still able to transfer an electron in the redox process. The process solutions are monitored regularly, with occasional addition of buffering agents and sometimes defoamers

A common problem with chelate-based processes is the degradation of the chelating agent[50]. Another problem is sulfur plugging in the contact tower. For this reason, these processes were usually limited to low pressures (below 300 psig), unless combined with a high pressure amine absorber. Today direct applications to high pressure sour gases have been developed and these are mentioned hereafter.

Because they share major process operations and are based on similar process chemistries, the process flow sheets and equipment requirements for liquid redox systems are rather similar. Lo-Cat, SulFerox, and Sulfint-HP are chelated iron liquid redox processes.

Lo-Cat II®

The Lo-Cat II® process[51,52,53], licensed by Merichem, is an improvement over the earlier Lo-Cat ® process. The process can be applied directly to natural gas sweetening or treatment of low-H_2S acid gas for conversion of H_2S to sulfur (see Section 22). The process uses a solution of iron which is held in solution by organic chelating agents. The iron in the solution oxidizes the hydrogen sulfide to sulfur. The iron chelate is then circulated to an oxidizer and regenerated for reuse in the process.

The process will not remove CO_2, COS, CS_2 nor RSH. If desired, some CO_2 can be removed from the feed gas by strong buffering of the solution.

Lo-Cat II utilizes special additives to reduce the rate of chelant degradation. For acid gas applications, an auto-circulation design is offered. Here, sparging of air in the oxidizer box causes solution to flow to the next compartment, obviating the need for a pump. Under proper conditions, the sulfur derived in the process is suitable for sale.

SulFerox®

The Shell SulFerox® process, developed by Shell Development Company and the Dow Chemical Company, is an iron chelate redox technology that removes hydrogen sulfide and converts it directly to salable sulfur in one step. The process offers low capital and operating costs through the use of a high concentration iron chelate solution and effective control of chelate degradation. The process also offers a patented contactor design to improve the overall efficiency of the process which further reduces capital costs. The optimum application for SulFerox is in the one to twenty tons per day range of recovered sulfur.

Sulfint-HP

The Sulfint-HP is an iron chelate based liquid redox technology licensed by Prosernat an IFP group company. It is claimed that it can be directly applied to high pressure sour gas streams. To avoid the problem of sulfur plugging which have plagued other redox technologies at elevated pressure, Sulfint-HP applies direct filtration of the sulfur containing solution which exits the high pressure absorber[54]. After filtration the clarified high pressure solution can then be partly recycled back to the absorber thus minimizing pumping cost and partly be letdown in pressure to be regenerated with air in an oxidizer vessel. The expansion of the aqueous based redox solution yields extremely low amounts of flashed gas. Sulfint-HP operation has proved easy and reliable in field operation[55].

BIOLOGICAL PROCESSES

Among biological processes worthy to mention is the Shell-Pacques process for removal of hydrogen sulfide from gas streams. The process can be considered attractive for quantities of hydrogen sulfide in the range of 0.5 to 30 long tons per day.

In this process a gas stream containing H_2S contacts an aqueous soda solution containing sulfur bacteria in an absorber. The soda absorbs the H_2S and then transfers to a regenerator. The regenerator consists of an aerated atmospheric tank where hydrogen sulfide is biologically converted to sulfur. The sulfur may be recovered as a moist filter cake or as a liquid product.

MEMBRANE SEPARATION PROCESS

Membranes are thin polymer-based barriers that allow preferential passage of certain substances over others. Gas separation through membranes relies on the principle that gases dissolve in and diffuse through the membrane polymers. Certain gases like H_2O, H_2S and CO_2, will permeate through a membrane at a faster rate than hydrocarbons due to a difference in the solubility and diffusion ability of those gases through the membrane. The difference in gas permeability rates through the membrane provides the basis for the separation. The separation is actually driven by the component partial pressure differences across the polymer membrane. The technology is therefore not applicable for very stringent sour gas specifications.

In design of membrane systems for these purposes it is important to focus on achieving high selectivity of CO_2 vs. natural gas in order to avoid natural gas losses, avoiding plastification of membrane materials due to high CO_2 partial pressures, and ensuring sufficient lifetime of the membrane material.

Recently, several very large membrane systems including some treating in excess of 300MMSCFD of gas containing over 30% CO_2 have been successfully implemented as a result of advances in pretreatment technology. Membrane system suppliers include Grace, Kvaerner Process Systems, Natco-Cynara, UOP, and Ube.

Pressure drop through the membrane is high, so the gas which permeates is available only at lower pressure. For the natural gas not permeating the membrane, the pressure drop will be similar to that through any other process unit.[56.]

Natural gas sweetening and dehydration using membranes often offers significant advantages over the more conventional methods such as amine treating, physical solvents, and solid adsorbents. Membranes can be used by themselves or in conjunction with amine units to maximize the benefits of both technologies. Membranes are particularly attractive when the pressure of the feed gas is high (over 500 psig) and/or the CO_2 content of the gas to be treated is high (over 10%). However membrane materials are not suitable for high hydrogen sulfide partial pressures and applications for bulk H_2S removal is not practical. According to Kvaerner Process Systems the maximum permissible H_2S partial pressure is around 20 psia for present membrane materials.

Other benefits of membrane systems are: a lower capital investment than amine plants in most cases (especially small capacities), reduced maintenance and labor costs, no moving parts and no chemicals used, excellent flexibility in adjusting to variations in feed flow and feed composition, and a significant space and weight advantage over amine plants. The last benefit is particularly significant in offshore applications. In all membrane systems care should be taken in order to have a proper pre-conditioning of the gas, and to avoid prohibitive natural gas losses.

PROCESS SELECTION

Selection of the best technology to apply to a given gas stream depends on many factors, and should be done by experienced personnel. Among the factors to be considered are: feed temperature and pressure, type and concentration of impurities, desired gas specification, flow rate, location, operating expense, and overall cost. Despite the large number of parameters involved, it is possible to give some general guidelines as to which process is most appropriate. For example, physical solvents will generally be more attractive than chemical solvents when the partial pressure of acidic components is high, owing to the higher loading and lower regeneration energy requirements associated with a physical solvent. If heavy hydrocarbons are present, however, physical solvents may be less attractive due to their tendency to co-adsorb these contaminants.

Figure 21-20 shows an example process selection chart for the case where both H_2S and CO_2 are to be removed from the gas stream. This is a modified version of a graph taken from Tennyson and Schaaf,[28] who also presented cases for removal of only H_2S, only CO_2 , and selective H_2S removal. Note that specific conditions may dictate the use of a process different from what is presented in this type of chart.[57]

MERCURY REMOVAL

Calgon

Solid adsorbents can remove mercury from gas to produce residuals in the range of 0.01–0.001 µg/Nm^3. Calgon sulfur impregnated HGR® (4 x 10 mesh) and HGR®-P (4 mm dia.) carbons are used for mercury removal and indicate designs removing mercury down to very low levels. Removal of both inorganic and organic mercury is achieved. By first drying the gas the degree of mercury removal increases. The sulfur im-

FIG. 21-20

Process Selection Chart for Simultaneous Removal of H_2S and CO_2[28].

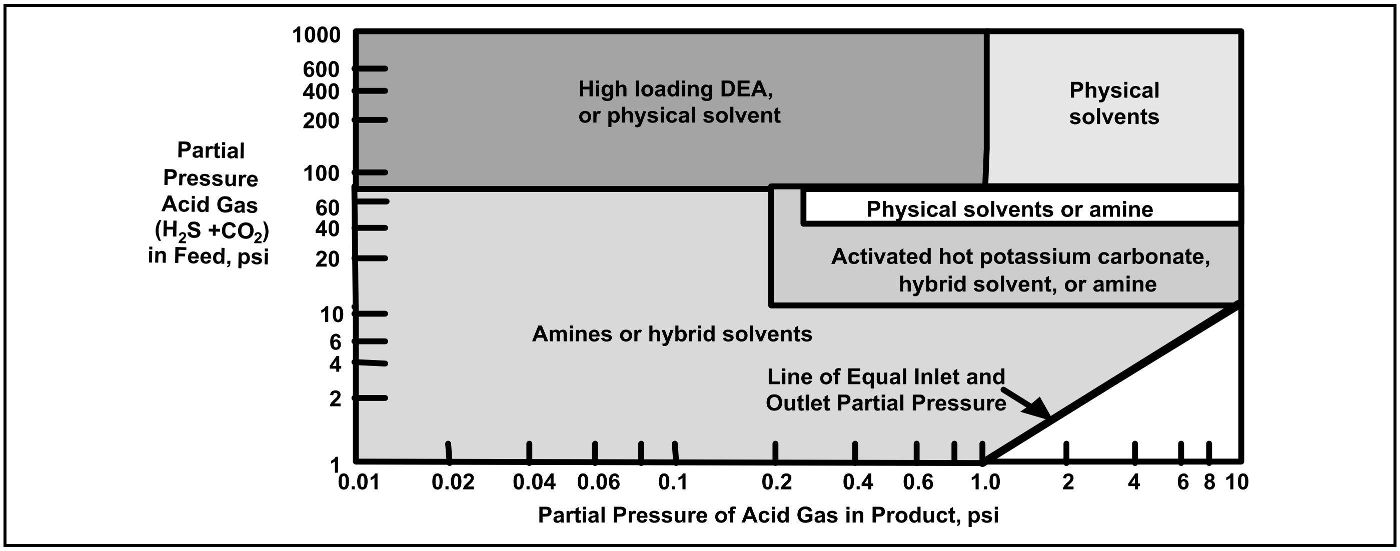

pregnate reacts with the mercury to produce a mercury sulfide that is fixed in the carbon microstructure.

Merespec™

Johnson Matthey Catalysts supplies MereSpec™ fixed bed absorbents for removal of traces, elemental and organic, of mercury from hydrocarbon liquids and gases. The absorbents have been shown to be capable of providing the outlet mercury concentration normally specified for LNG production and are in service in several European locations including an offshore oil/gas production platform. Merespec™ is a trademark of Synetix.

Desorex

Activated carbon provides only a limited storage capacity for the strictly physical adsorption of mercury. Desorex HGD2S and HGD4S from Donau Carbon can be employed to bind mercury through the process of chemical adsorption involving oxidation and adsorption in the form of stable compound or fixation in metallic form as an amalgam. Many reference installations of these Desorex products for the purification of natural gases to levels as low as 10 ng/m^3 of mercury have been realized over a long period of time.

HgSIV

UOP supplies HgSIV adsorbents which are molecular sieves coated with elemental silver. Mercury in the gas is trapped by amalgamation with the silver. The adsorbent also serves the dual function of dehydrating the gas. HgSIV is regenerated thermally, just like molecular sieves for dehydration. This material can be added as a layer to existing molecular sieve dryers[58]. However, one must take care to appropriately handle the regeneration gas in this case, as it will contain mercury.

CMG 275 and 273

Another mercury trapping material labeled CMG 275 was developed by IFP and Procatalyse (today Axens) which is sulfur supported onto mesoporous alumina. The advantage of mesoporous alumina based product is its resistance to capillary condensation[59]. The larger pore size of this material, compared to carbon based trapping materials permits utilization under near dew point conditions. In another material from Axens labeled CMG 273 the trapping component is anchored on the alumina carrier making it completely insoluble in liquid hydrocarbons and water. The material has been subjected at gas plant sites to both DEA and liquid hydrocarbon carry-over with no active phase leaching. This same material has been used to eliminate elemental mercury from LPG and full range condensates.

Organic Mercury Removal

Removal of all forms of organic mercury compounds from natural gases and liquids requires firstly the conversion of the compounds to elemental metallic mercury followed by trapping materials to remove the metallic mercury formed. This requires in the first stage some hydrogen for the organo-mercury hydrogenolysis with a suitable catalyst. The first stage catalyst such as MEP 841 also traps arsenic and lead impurities in the feed. The two stage impurities removal process is called RAM and is available from Axens.

ACID GAS INJECTION

In some cases, it is possible to compress the acid gas as generated from a chemical or a physical solvent process and inject it into a depleted, non-producing, or even a producing reservoir[60]. A key consideration is the phase behavior of the acid gas mixture. Depending on temperature, pressure, and composition, the acid gas may be injected as a liquid or gas; or as a dense phase. Dehydration is usually necessary to avoid corrosion or hydrate formation. However, in many cases, a minimum in water-holding capacity occurs with respect to pressure. Thus, it may be possible to compress the gas to a given level, cool it, and drop out the liquid water. Further compression increases the capacity of acid gas to hold water, so that water drop out should not occur in the downstream piping or well. The phase behavior of acid gas mixtures is complex, and careful consideration must be given to the design of the project.[61,62.]

There have been a number of successful acid gas injection projects, with sulfur contents of 1 to more than 70 tons per day[63].

LIQUID HYDROCARBON TREATING

As a guide in the selection of the method of treating to be used, the following characteristics of each are given:

Regenerated Caustic

1. Can handle large volumes of hydrocarbon.
2. Primarily for removing methyl and ethyl mercaptans.
3. Capable of producing a doctor-sweet product.
4. Reduces the total sulfur content of treated product.

Perco Solid Copper Chloride

1. Can treat gasoline streams with relatively high mercaptan content.
2. Suited for small flow rate.
3. Sulfur content not reduced.
4. Water content must be only that of saturation.
5. Hydrogen sulfide must be removed ahead of contact with bed.
6. Excess regeneration oxygen may cause corrosion downstream of bed. Gasoline with components that may be affected by oxygen, such as olefins, should not be treated with this process.
7. Capable of producing doctor-sweet product.

Batch Caustic Wash

1. Can use a single wash.
2. Best suited for streams with low mercaptan content (if mercaptan removal is important).
3. Primarily for removing trace amounts of hydrogen sulfide and methyl and ethyl mercaptans.
4. Disposing of spent caustic can be a major consideration.
5. Relatively high caustic consumption per gallon of product.

Solid Potassium Hydroxide

1. Low installation and operation costs.
2. Acts as a desiccant as well as removing the sulfur compounds.
3. Suitable for removing trace amounts of H_2S.

Molecular Sieve

1. Can handle large or small streams.
2. Reduces total sulfur content by removing hydrogen sulfide, mercaptans, and partially removing organic sulfur in the same adsorber vessel.

3. Will produce 1A copper-strip, doctor-sweet product.
4. Will dry in the same step with additional equipment.
5. Requires that the regeneration gas be made slightly sour by use of this stream to strip sulfur compounds from the molecular sieve.

Merox

1. Can handle large or small streams.
2. Eliminates problem of disposal of spent caustic.
3. Product is sweet when it leaves unit; no holding period is required.
4. Adds problems of sulfur compounds in regeneration air leaving the regenerator.

Merichem

1. Can handle large or small streams of light hydrocarbon liquids.
2. Removes mercaptans and organic acids.
3. Uses a bundle of fibers to increase interfacial area between caustic and hydrocarbon.
4. Sulfur compounds are present in regeneration air

GENERAL NOTES ON LIQUID HYDROCARBON TREATING

Mixing (Liquid/Liquid Treating Systems)

Good mixing of gasoline and treating solution may be accomplished by means of a low efficiency (40%) centrifugal pump. The gasoline stream and solution recycle stream join just ahead of the pump and are discharged to the solution settling tank.

Treaters may use static in-line mixers to obtain good gasoline-caustic contact. A properly designed in-line static mixer will create a controlled droplet size with a narrow size distribution. Continuous renewal of the dispersed phase surface area accelerates mass transfer. The static mixer accomplishes this uniform dispersion with less energy than most other devices. As the velocity through the static mixer increases, the pressure drop increases and the mean droplet diameter decreases. A homogeneous mix is usually achieved in a mixer which is a few pipe diameters in length.[64]

Treated Product Clean-up

Sand towers may be placed downstream of a liquid wash of gasoline or LPG to remove any entrained water or solution. The gasoline flows downward through the tower. The design of the tower is based on a space velocity of (4 volumes of gasoline)/(volume of sand)/hour.

A downstream water wash of the treated hydrocarbon liquid is also a good way to remove entrained water-based treating solutions such as caustic and amine. The process is identical to the caustic wash shown in Fig. 21-21. A water circulation rate of 10 to 30 percent of the hydrocarbon rate should be adequate, if good liquid-liquid contact is obtained. The solution concentration in the wash water should not build up to more than 3 weight percent.

Counterflow Contact Towers

In the liquid/liquid contact tower, the hydrocarbon feed is introduced through a distributor at the bottom of the tower and becomes the dispersed phase. The treating solution is introduced countercurrently at the top of the tower and becomes the continuous phase. The dispersed phase migrates upward through the packing due to the difference in densities of the two liquids. The sweetened product is removed from the top of the tower where 8 to 10 feet of open column are provided for disengagement of the heavy phase.

Counterflow contact towers can either be packed or trayed. A sieve (perforated) tray with downcomers is probably the most effective for use in liquid-liquid contact devices. The light liquid flows through the perforations of each plate and is thereby dispersed into drops which rise through the continuous phase. The continuous liquid flows horizontally across each plate and passes to the plate beneath it through the downcomer. If the heavy liquid is the dispersed phase, the same design may be used but turned upside down. Extraction rates are enhanced by the repeated coalescence and re-formation of droplets of the dispersed phase.

For best tray efficiency, the dispersed phase must issue cleanly from the perforations. This requires that the material of the plates be preferentially wetted by the continuous phase or that the dispersed phase issues from nozzles projecting beyond the plate's surface. This may be formed by punching the holes and leaving the burr in place, or otherwise forming the jets. The liquid flowing at the larger volume rate should be the dispersed phase.

Perforations are usually 1/8" to 1/4" diameter with a total hole area equal to 15 to 25 percent of the column cross-sectional area. The tray has no outlet weir. Perry provides a calculation procedure for designing liquid-liquid contact sieve trays.[65]

Metal or plastic ring packing also provides good solution contact in counterflow towers. One theoretical stage can generally be obtained in 6 to 8 feet of packed bed height. Ceramic or steel packing should not be preferentially wetted by the dispersed (hydrocarbon) phase. Previous investigations of wetting properties in liquid extraction applications generally indicate that where the dispersed phase wets the packing, mass transfer efficiency is reduced.[66]

The packing diameter should be no larger than one-eighth of the tower diameter, but normally no smaller than one-half inch. The hydrocarbon velocity should be about 15 GPM per square foot of open tower cross sectional area.[65] The hydrocarbon distribution nozzles should be designed with an orifice velocity in the range of one ft/sec. Higher velocities result in the formation of small droplets which can form a hydrocarbon emulsion in the treating solution leaving the bottom of the tower.[66]

For caustic treaters, the packing material is usually carbon raschig rings, which offer better resistance to attack by the caustic solution.

GASOLINE AND LP-GAS TREATING

Most gasoline and LP-gas streams contain sulfur in various forms and LP-gas and raw NGL streams also can contain carbon dioxide. Especially objectionable are hydrogen sulfide, mercaptans, and elemental sulfur. Gasoline containing hydrogen sulfide has objectionable odor and is corrosive. Mercaptans give an objectionable odor to gasoline and elemental sulfur makes the gasoline corrosive. Carbonyl sulfide in the LP-gas can hydrolyze and cause the product to become corrosive. A product containing the objectionable materials can be treated to remove the hydrogen sulfide, carbonyl sulfide, and elemental sulfur and to either remove the mercaptans or convert them to less objectionable compounds.

Hydrogen Sulfide and Carbon Dioxide Removal

Hydrogen sulfide and carbon dioxide can be removed from LP-gas and gasoline by liquid-liquid contacting processes using a caustic solution, aqueous alkanolamines, or solid KOH. The caustic wash processes are described later. The alkanolamine processes were described earlier in the gas treating section. For application, both a coalescer and a full flow carbon filter should be used to minimize the introduction of hydrocarbons into the regeneration section of the amine unit.

When treating hydrocarbon liquids with amine, contacting is generally accomplished in a liquid-liquid contactor, though stirred reactors can be used. The tower should have a minimum of 20 feet of packing. The design flow rates for packed towers should not exceed 20 gpm liquid per square foot of cross sectional area.

Sulfur Removal

Elemental sulfur is removed from the gasoline by contacting it with a polysulfide wash solution. The solution is made up by using the following amounts of chemicals per 1,000 gallons of water: 1,000 lb. of caustic (NaOH), 800 lb. of commercial Na_2S, and 20 lb. of sulfur. The sodium sulfide (Na_2S) is melted in a vat by use of a steam lance. Add the sulfur to the melted Na_2S. The sulfur must be completely dissolved in the liquid sulfide, and then this mixture is added to the 10% (1,000 gal. water and 1,000 lb. NaOH) caustic solution. Protective clothing and goggles should be worn when handling these chemicals.

Mercaptan Treating

Mercaptans can be converted to disulfides or removed from liquid hydrocarbons by several methods. The method or combination of methods that can be used depends on the mercaptan content of the product to be treated and the specification that must be met. Some of the common treating methods are discussed below.

Carbonyl Sulfide Removal

Because carbonyl sulfide (COS) can hydrolyze and cause sweet LP-gas to become corrosive, and as the concern for minimizing total sulfur emissions has increased, there has been a growth of interest in removing COS from propane and LP-gas streams. Several alternative processes can be used. COS can, of course, be removed sacrificially by MEA. Mick[67] has reported successful use of a combination of potassium hydroxide and methanol. This process is also sacrificial. The Malaprop[68,69] process uses diglycolamine® and requires little or no modifications in the process flow from that used for gas treating. The ADIP[70] process utilizes aqueous diisopropanolamine. Molecular sieves can be used for removing COS. The Malaprop, ADIP and molecular sieve processes are regenerative.

CONTINUOUS LIQUID PROCESSES

Regenerative Caustic

The regenerated caustic method of removing methyl and ethyl mercaptans from LP-gas or butane employs countercurrent contacting of the liquid with 10% sodium hydroxide solution in a packed column. A typical flow scheme is illustrated in Fig. 21-14. The caustic is regenerated in a stripping column by the addition of open steam or by steam internally generated by a column heating element. A condenser may be used to condense water vapors that go overhead with the liberated mercaptan vapors. The condensate is returned to the stripping column to maintain caustic concentration. An LP-gas stream containing 0.03% mercaptan sulfur can be treated doctor sweet with volume ratios of hydrocarbon to caustic as high as 33 to 1. Approximately six pounds of process steam per gallon of caustic are required for regeneration at this hydrocarbon/caustic volume ratio. The following ratios may be used to determine optimum plant design:

FIG. 21-21

Non-Regenerative Caustic

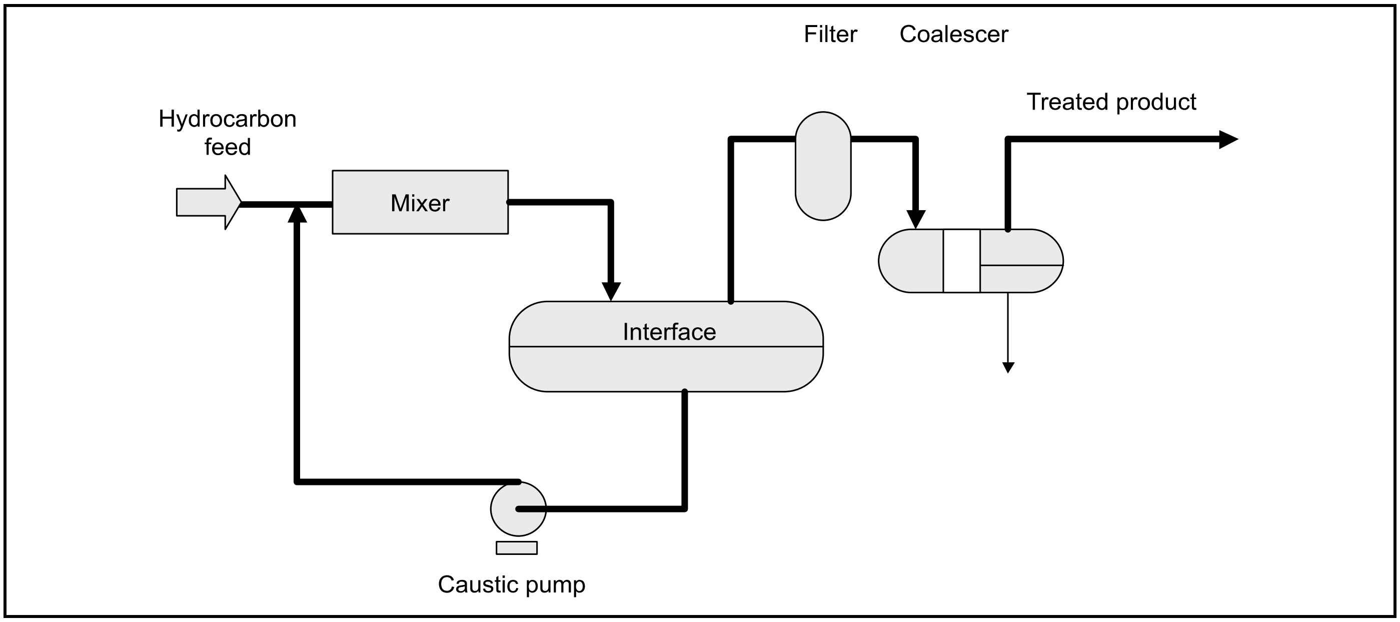

$\frac{\text{lb steam}}{\text{gal. NaOH}}$	4	5	6	7	8	10	12	14.5	17
$\frac{\text{gal. hydrocarbon}}{\text{gal. NaOH}}$	15	25	33	39	43	50	55	60	62

Highly corrosive conditions that can exist in a unit for this process are minimized by careful attention to operation conditions, specifically by minimizing the contamination of the regenerated caustic system with sodium sulfide and by operating the rectifying column at low pressure and temperature. The maximum desired steam temperature to the reboiler is 260°F. The sulfide contamination is controlled by caustic washing of the LP-gas ahead of the mercaptan extractor and by blowdown of the circulating solution. A maximum Na_2S content of 0.2% is suggested.

The diameter of the extractor is based upon the hydrocarbon throughput. A typical design uses flow rates of 10-15 GPM/sq ft of cross-sectional area for a column packed with 1-1/4 in. raschig rings. Other tower packing may be used and, if so, the above throughput would be changed. The packed height is normally about 30 feet in two or three packed sections to optimize dispersion of the hydrocarbon phase. An additional 8 - 10 feet of column height is required for distribution and settling areas.

Merox®

A variation of regenerated caustic process has been developed by UOP Process Division. Sour product is treated with caustic containing Merox catalyst to extract the mercaptans. The Merox solution is regenerated by mixing with air and oxidizing. Disulfides and excess air are removed overhead. Existing extraction equipment with steam regeneration can be adapted to the Merox process.

The Merox solution gives a very high degree of removal of mercaptans in a liquid stream. If more complete removal is desired, Merox also provides a fixed-bed catalytic conversion of mercaptans to disulfides. These disulfides will not be removed from the liquid stream, but will remain with the liquids. However, the sulfur leaves as disulfide (no odor) rather than mercaptans.

Merichem®

Merichem®[71] offers several processes for the removal of Na_2S and/or mercaptans from light hydrocarbon liquids. In all of these the key technology is use of a patented Fiber Film® bundle to achieve intimate contact between the hydrocarbon feed and the caustic solution. The bundle is comprised of long continuous small diameter fibers placed in a pipe. The caustic solution preferentially wets the fibers, creating a large interfacial area for contact with the hydrocarbon liquid. The fiber bundles can be installed easily into existing systems.

1. Merifining uses caustic to extract organic acids, mercaptans, and other sulfur compounds from catalytic cracked hydrocarbons.
2. Napfining extracts naphthenic and other organic acids from petroleum distillates that produce kerosene and jet fuel.
3. Mericat uses an oxidation catalyst bearing caustic solution and air to oxidize gasoline and kerosene mercaptans to disulfides.
4. Thiolex uses caustic to extract hydrogen sulfide and mercaptans from fuel gas, propane, butane, alkylation feed and straight run gasolines.
5. Regen uses air to regenerate Thiolex caustic solutions for reuse.

Perco Solid Copper Chloride Sweetening

The copper chloride sweetening process can be used to sweeten natural gasoline. It is a continuous process in which the mercaptan sulfur in the gasoline is converted to disulfides in a reaction with copper chloride.

The copper chloride reagent is impregnated on a stationary bed of Fullers earth. As manufactured, this material contains approximately 16% water and loses its reactivity below 7%. To maintain the reactivity of the Perco bed, water should be added by (a) injecting a small quantity of steam into the gasoline feed stream to the treater, or (b) bubbling a sidestream of gasoline through a small pot containing water and returning it to the main stream. Above 30% water content, the copper chloride tends to be extracted from the Fullers earth. Because water is formed in the overall Perco sweetening reaction, it is often necessary to heat the gasoline feed to prevent the formation of free water which would tend to dissolve copper chloride from the Fullers earth. Any hydrogen sulfide in the gasoline must be removed by a caustic wash before contact with the Perco bed.

In the sweetening reaction mercaptans are oxidized to the disulfide and copper is reduced from cupric to cuprous:

$$4\ RHS + 4\ CuCl_2 \rightarrow 2\ RSSR + 4\ CuCl + 4\ HCl \qquad \textbf{Eq 21-28}$$

The cuprous chloride is regenerated simultaneously by adding air to the inlet gasoline stream:

$$4\ CuCl + 4\ HCl + O_2 \rightarrow 4\ CuCl_2 + 2\ H_2O \qquad \textbf{Eq 21-29}$$

The "standard" bed depth is 7 feet with a maximum of 9 feet and a minimum of 4 feet.

FIG. 21-22

Standard Solid Copper Reagent Towers

Charge Rate, bbl/day	Tower size, ft.	Bed Volume, cu ft.	Reagent, lb.
187	2 x 10	21.9	1,090
424	3 x 10	49.5	2,475
752	4 x 10	88.0	4,400
1,177	5 x 10	137.5	6,870
1,500	5 x 12	176.5	8,830

The charge rate in Fig. 21-22 is based on two volumes of gasoline/volume of reagent. If the mercaptan content of the gasoline is low, this charge rate can be exceeded.

Air is added to the sour charge by means of a diffusing disc at the rate of 1 cu ft of air (STP)/bbl of charge for each 0.01% mercaptan sulfur. If the mercaptan content of the gasoline is high, the operating pressure must be increased to hold the additional air in solution. The rate of air injection should be maintained as near to this figure as practical since insufficient air will prevent complete reactivation of the reagent and excess air may result in airbinding of the treater vessel — an extremely hazardous condition.

BATCH PROCESSES

Caustic Wash

Caustic wash can be used to remove hydrogen sulfide and/or lighter mercaptans from LP-gas and gasoline. Liquid hydrocarbon and recirculated caustic (Ratio 1:0.5) are mixed by means of a pump or static mixer and discharged to a settling tank where the liquids separate. The size of the tank required is based on the retention time necessary for complete separation of the gasoline-caustic emulsion. The retention time varies from 1-1/2 hours for heavy gasolines to 30 minutes or less for propane. A coalescing element on the settling tank inlet can reduce the required retention time. Since the separating tank is one-third full of caustic, the liquid hydrocarbon retention time is based on two-thirds of the tank volume. A typical caustic wash system utilizing a static mixer is given in Fig. 21-21.

Any discussion on materials of construction for caustic must take personnel safety into consideration for every application. Caustic solutions, especially when hot, are extremely damaging to the human body. The materials selection decision must take into account potential personnel exposure and may dictate a more costly but more reliable material.

Mild steel remains the most utilized material. It is effective in caustic solutions up to 50 percent concentration and at temperatures up to 150°F. Corrosion rates in the range of 15-25 MPY (depending on agitation, etc.) can be expected. Austenitic Ni-Cr stainless steels, primarily type 304 and 316, are very resistant to caustic in concentrations up to 50 percent and temperatures to about 200°F.

Stress corrosion cracking (caustic embrittlement) has been reported in laboratory testing at concentrations as low as 10 percent with temperatures of 210°F.[72] Stress relieving of carbon steel is recommended for most applications.

Centrifugal pumps used in caustic circulation may experience premature seal failure which results from crystallization of sodium hydroxide on the seal face. Using an API Plan 62 (external fluid quench) system with a fresh water seal flush fluid or a Plan 52 (tandem seal) system with a buffer fluid are good solutions. Glandless pumps (such as magnetic drive and canned motor) are also used in this application.

A method for calculating the acid (H_2S and RSH) removal efficiency in a batch caustic wash system was published by Beychok in 1973.[73] and is covered in detail in the previous 11th edition GPSA Engineering Databook as Example 21-3 starting on page 21-22.

OFFSHORE DESIGN CONSIDERATIONS

Hydrocarbon Treating in the offshore industry encompasses many of the same processes as can be seen in the onshore industry. However, much more emphasis is given to minimize size and weight of the equipment. For floating production certain precautions also need to be taken in order to mitigate the negative influences of the vessel movements. Of particular importance is the constant tilt of the contacting and regeneration towers, which will seriously deteriorate the performance of the towers due to mal-distribution. References are made to Sections 7 and 19, where the separators and fractionators /absorbers face similar challenges.

Some key considerations of importance for a sound design of a hydrocarbon treating system on an offshore installation are:

Extensive use of sophisticated high tensile strength metallurgy, since this will both reduce equipment weight and allow for less maintenance. The reduced equipment weight is due to reduced wall thickness when using high tensile steels. Less maintenance will be required since less corrosion particles will be expected and therefore less filtration and less chemical consumption.

Compact contacting technology in order to save weight and space.

Compact module-based units with great emphasis on optimized piping lay-outs and integrated solutions in order to save weight and space.

Great emphasis on keeping a clean operating plant by starting with a clean plant and degreasing before first fill and after large revamps. Keeping the feed gas clean by proper pre-treatment of the gas. Maintaining a clean solvent by proper solvent filtration with both charcoal and mechanical filters and minimizing use of additives like anti foam agents. Keeping a clean system by avoiding hydrocarbon condensation in the absorber by introducing superheat if retrograde properties exist, insulating the contactor and/or keeping a safe differential temperature between liquid inlet and gas inlet (typically 20°F higher on liquid side).

Keeping a clean operating plant is much more important offshore, because of the great difficulties of "trucking" in huge reclaiming equipment and other rescue matters[74].

Well equipped offshore laboratory with skilled personnel is very important, since more of the problems need troubleshooting and to be solved on-site.

Special considerations for floating production units should include:

- avoiding greater constant tilt than 1 degree.
- keeping vessel movements to a minimum with full dampening often required.
- careful level measurements, see also Section 7.
- internals selection; for example pressurized liquid distribution in absorber and regeneration towers.

EMERGING TECHNOLOGIES

This sub-section of Section 21 is intended to mention recently developed technologies in hydrocarbon treating some of which have not yet seen full scale industrial applications but have been subject of past GPA and Laurance Reid Gas Conditioning conferences and/or publications worldwide. In future evolving editions of this "living" GPSA Engineering Databook, some of these emerging technologies will be placed along with the industrial ones already described in the main text while yet newer technologies emerge to find their mention here.

The text which follows is in the order of subject appearance in the main text, starting with chemical reaction processes and ending with batch processes. Understandably, it is beyond the scope and intent of this data book to cover every emerging technology worthy of mention.

Alkanolamine Processes

A compact alkanolamine process (CAP) based on the ProPure[75] co-current contacting technology is being developed by ProPure Purification, a subsidiary of Statoil. It is a continuous selective trace H_2S removal process. It relies on the rapid and selective tertiary alkanolamine chemistry with H_2S used in a novel co-current short residence time contactor, further enhancing the H_2S selectivity. The process is ideally suited for offshore applications where low weight and foot print is a premium. It competes well with conventional scavenging processes as the H_2S containing solvent is regenerated and thus scavenger chemical consumption is avoided.

Hybrid Solvent Processes

A modern version of the Amisol process has been developed by IFP together with Total called Hybrisol[77]**.** This process combines the physical solvency attributes of methanol with the chemical reactivity of alkanolamines (DEA or MDEA)**.** It is integrated upstream with the Ifpex-1 dehydration technique (see Section 20 dehydration) and when coupled with a downstream cold process achieves simultaneous dehydration, complete acid gas and mercaptan removal together with sweet NGL extraction. Furthermore it produces dry acid gas at some pressure.

Highly Sour Gas Pretreatment Processes

Among processes destined for acid gas re-injection when treating very highly sour lean natural gases are the following pretreatment processes. Each can be followed by a complete acid gas removal process to make pipeline gas specification:

In the Sprex process developed by IFP together with Total[77] a substantial part of the acid gases; notably the H_2S, from the inlet gas is pre-extracted in a cyclone or column by cold reflux as a bottoms pumpable liquid at line pressure and ambient temperature. The extracted liquid also contains essentially all the water of saturation of feed gas so no further dehydration nor inhibition is required for the downstream cold condensing process. The liquid also contains some limited amount of hydrocarbons.

An Acid Gas Fractionation process developed by Kvaerner Process Systems[78] utilizes refrigeration and a downstream fractionation column to liquefy the acid gas components as a bottoms product for disposal. The process claims high extraction levels of H_2S and CO_2 with limited hydrocarbon losses with use of the fractionation column.

Claus Reaction Processes

An alternative to liquid redox processes has recently been developed.[79,80] CrystaSulf, marketed by CrystaTech, Inc., is a technology that utilizes a non-aqueous solution to absorb H_2S from the process stream, and react it with dissolved SO_2 to form dissolved elemental sulfur in the absorber via the modified Claus reaction. The proprietary non-aqueous solution does not absorb CO_2, and therefore is not affected by high partial pressures of CO_2.

After contact with the process stream, the solution is flashed to lower pressure. The flash gas may be vented to fuel gas or to a flare, or may be compressed and returned to the inlet, if desired. The solution keeps elemental sulfur dissolved until the temperature is reduced from the absorber temperature of 150F-160F to the crystallizer temperature of 90F-120F. There, elemental sulfur precipitates from solution. Since the elemental sulfur is kept dissolved in the absorber and other pressurized portions of the plant, the problem of sulfur plugging in high-pressure equipment is thus avoided, and the process can be applied to high-pressure gas streams.

Molecular Sieves

Engelhard has developed the Molecular Gate™ technology using titanium silicate materials whose pore size can be adjusted to +/- 0.1 Angstrom. These materials can be used to preferentially adsorb molecules on a size exclusion basis. For example, a material with 3.7 Angstrom pore diameter will adsorb nitrogen with a molecular diameter of 3.6 Angstrom but pass methane with a molecular diameter of around 3.8 Angstroms.

The Molecular Gate™ system utilizes a pressure swing adsorption (PSA) process. It can also be designed for the simultaneous removal of CO_2 and nitrogen from natural gases containing both impurities[81].

Gas/Liquid Membranes

Kvaerner Process Systems and its joint industry partners are in the final stages of commercializing a novel membrane contactor technology based on highly resistant inert PTFE materials from WL Gore and Associates[82].

The contactor can be applied in a range of gas processing applications with amines including both low pressure removal of CO_2 from exhaust gases and high pressure natural gas sweetening. Benefits include substantial reduction of volume and weight of contactor and reduced energy requirements.

Membranes for CO_2 Removal from Liquid Ethane

It has been verified in a pilot facility utilizing a full scale membrane element, that membranes can be used to remove CO_2 from a liquid ethane stream. The membrane module constitute of an assymetric hollow fiber made of cellulose-acetate. Tests have shown acceptable ethane losses, while providing a secondary benefit of removing some methane from the ethane product[83].

Batch Scavenging Processes

The Gas Research Institute (GRI) have sponsored an evaluation program for H_2S scavenging technologies[84]. Among the novel / emerging scavengers tested are the following:

- Sulfa-Scrub HSW-700L from Baker-Petrolite
- GasTreat 136 from Champion Technologies
- GasTreat 155 from Champion Technologies
- Swan MSS-58 from Swan Industries Inc.
- Sulfarid 8411 from Edmunds and Associates Inc.
- Quaker Enviro-Tek from Quaker Chemicals Corp.
- DM-5927 from BetzDearborn
- Nalco/Exxon EC-5492A from Nalco/Exxon Energy Chemical L.P.
- Dynea and Statoil have patented and developed an H_2S scavenger called Dyno HR 2707 which is reported to be very efficient at low temperatures and very low levels of H_2S.[85]

Controlled-Freeze Zone (CFZ) Process

This ExxonMobil process removes CO_2, H_2S, and other impurities from natural gas. The unique aspect of the process is that it induces CO_2 freezing in an open area of a cryogenic fractionation column.[86] (The Ryan Holmes process, described in Section 16, adds a hydrocarbon stream to suppress CO_2 freezing in the distillation column.) The solid CO_2 melts in the stripping section of the CFZ column, and flows out as a liquid along with the other contaminants. The liquid stream can then be easily pumped for downhole disposal. Methane, nitrogen, and helium come out overhead.

REFERENCES

1. MSDS Number 100.240-4, March 1986.
2. National Safety Council Data Sheet 1-682-80.
3. Kathib, Z., "Reduction of Entrainment of Aerosols," presented at the Laurance Reid Gas Conditioning Conference, University of Oklahoma, March 1997.
4. Herrin, J.P., " Removing Very Fine Iron Sulfide Particles from Natural Gas," presented at the Laurance Reid Gas Conditioning Conference, University of Oklahoma, March 1994.
5. Kensell, W.W., "How to Pick a Treating Plant," Hydrocarbon Processing, August 1979, p. 143.
6. Goar, B.G. and Arrington, T.O., "Guidelines Set for Handling Sour Gas," Oil and Gas Journal, June 26, 1978, p. 160.
7. Bottoms, R.R., U.S. Patent 1,783,901 (1930).
8. Kohl, A.L. and Reisenfeld, F.C., *Gas Purification,* McGraw-Hill Book Co., Inc. (1960) (Chemical Engineering Series).
9. Maddox, R.N., *Gas and Liquid Sweetening*, Campbell Petroleum Series, April 1977, p. 99.
10. Lee, J.I., Otto, F.D., and Mather, A.E., "The Solubility of Mixtures of CO_2 and H_2S in DEA Solutions," Canadian J. Chem. Eng., 52, p. 125 (1974).
11. Ballard, D., "How to Operate an Amine Plant," Hydrocarbon Processing and Petroleum Refining, Vol. 45, No. 4, April 1966, p. 137.
12. Blake, R.J. and Rothert,K.C., "Reclaiming Monoethanolamine Solutions," Proceedings Gas Conditioning Conference 1962, University of Oklahoma Extension Division.
13. Harbison, J.L. and Dingman, J.C., "Mercaptan Removal Experiences in DGA® Sweetening of Low Pressure Gas," Proceedings Gas Conditioning Conference 1972, University of Oklahoma Extension Division.
14. Holder, H.L., "Diglycolamine—A Promising New Acid-Gas Remover," Oil and Gas Journal, 64, No. 18, p. 83 (1966).
15. Say, G.R., Heinzelman, F.J., Savage, D.W., et. al., "A New Hindered Amine Concept for Simultaneous Removal of CO_2 and H_2S From Gases," Chemical Eng. Progress, October 1984, p. 72.
16. Goldstein, A.M., Edelman, A.M., Beisner, W.D., and Ruziska, P.A., "Hindered Amines Yield Improved Gas Treating," Oil & Gas Journal, July 16, 1984, p. 70.
17. Clem, K.R., Kaufman, J.L., Lambert, M.M., and Brown, D.L., "Gas Treating Advances With Flexsorb Technology," Proceedings Gas Conditioning Conference, 1985, University of Oklahoma Extension Division.
18. Jones, V.W. and Pearce, R.L., "Fundamentals of Gas Treating," Gas Conditioning Conference, Norman, Oklahoma, March 1980.
19. Calculations conducted by the Section 21 Sub-committee using TSWEET software in June 2001.
20. Jones, J.H., Froning, J.R., and Claytor, E.E., Jr., Chemical Engineering Data, 4, (January 1959), p. 85.
21. Lee, J. I., Otto, F.D., and Mather, A.E., Gas Processing/Canada, March-April 1973, p. 26.
22. Dingman, J.C., Jackson, J.L., Moore, T.F., and Branson, J.A., "Equilibrium Data for the H_2S-CO_2 Diglycolamine Agent-Water System," 62nd Gas Processors Association Annual Meeting, San Francisco, March 14-16, 1983.
23. Jou, F.-Y., Otto, F.D. and Mather, A.E., "Solubility of H_2S and CO_2 in MDEA Solutions," 1981 AIChE annual meeting.
24. Jou, F.-Y., Otto, F.D. and Mather, A.E., "Solubility of mixtures of H_2S and CO_2 in MDEA Solutions," 1986 AIChE annual meeting.
25. Kent, R.L. and Eisenberg, Hydrocarbon Processing, February 1976, p. 87.
26. Williams, W.W., "How to Remove Mercaptans from Natural Gas," Hydrocarbon Processing and Petroleum Refiner, Vol. 43, No. 7, July 1969, p. 121.
27. Picciotti, M., "Optimize Caustic Scrubbing Systems," Hydrocarbon Processing, May 1978, p. 201.
28. Tennyson, R.N. and Schaaf, R.P., "Guidelines Can Help Choose Proper Process for Gas Treating Plants," Oil and Gas Journal, January 10, 1977, p. 78.
29. Kutsher, G.S., Smith G.A., and Greene, P.A., "Sour Gas Scrubbing-Allied Chemical Solvent Process," Proceedings of the 46th NGPA Annual Convention, March 14-16, 1967, Houston, TX.
30. Hegwer, A.M. and Harris, R.A., "Selexol Solves High H_2S/CO_2 Problem," Hydrocarbon Processing, Vol. 49, No. 4, April 1970, p. 103.
31. Kohl, A.L. and Miller, F.E., U.S. Patent 2,926,751, March 1, 1960.
32. Kohl, A.L. and Buckingham, P.A., "Fluor Solvent CO_2 Removal Process," Petroleum Refiner, 39, No. 5, p. 193 (May 1960).
33. Wendt, C.J., "The Purisol Process for Acid Gas Treatment," Proceedings Gas Conditioning Conference 1969, University of Oklahoma Extension Division.
34. Eickmeyer, A.G., Wiberg, E.A., and Gangriwala, H.A., "Energy Savings in the Gas Patch Using Catacarb Processes," Petroenergy 81, Houston, Texas, September 1, 1981.
35. Newman, S.A. Editor, *Acid and Sour Gas Treating Processes*, Gulf Publishing Company, 1985, pp. 112-130.
36. Goar, B.G., "Sulfinol Process Has Several Key Advantages," Oil and Gas Journal, June 30, 1969, p. 117.
37. Benson, H.E. and Parrish, R.W., "HiPure Process Removes CO_2/H_2S," Hydrocarbon Processing, April 1974, p.81.
38. Perry, C.R., "Activated Carbon Filtration of Amine and Glycol Solutions," Proceedings Gas Conditioning Conference 1974, University of Oklahoma Extension Division.
39. API RP 945, Avoiding Environmental Cracking in Amine Units, para. 3.2.3.
40. The Dow Chemical Company (Midland, Michigan), Dow Gas Conditioning Fact Book, 1957, 1962, p. 339.
41. Bhatia, K. and Edwards, M. "Application of Sulfa-Check in the Gas Industry," proceedings of the GRI Liquid Redox Sulfur Recovery Conference Austin Texas, April 1992 p. 353.
42. Dillon, E.T., "Gas Sweetening with a Novel and Selective Hexahydrotriazine," proceedings of the GRI Liquid Redox Sulfur Recovery Conference, Austin, Texas, April 1992 p. 373.
43. Perry, C.R., "A New Look at Iron Sponge Treatment of Sour Gas," Proceedings of Gas Conditioning Conference 1970, University of Oklahoma Extension Division.
44. Manning, W.P., "The Chemsweet Process," Permian Basin Regional Meeting of the Gas Processors Association, May 1982.
45. Woodward, C., "Temporary Sweetening Unit Aids Early Oil, Gas Production," Oil & Gas Journal, February 13, 1995, p. 74.
46. C. Woodward, paper at GASTECH 96, Vienna, December 1996.
47. Turnock, P.H. and Gustafson, K.J., "Advances in Molecular Sieve Technology for Natural Gas Sweetening," Proceedings Gas Conditioning Conference 1972, University of Oklahoma Extension Division.
48. Leppin, D. and Dalrymple, D.A., "Overview of Liquid Redox Technology for Recovering Sulfur from Natural Gas," Laurance Reid Gas Conditioning Conference, Norman, Oklahoma, March 2000.

49. Hileman, O.E., "Liquid Redox Desulfurization," 1991 GRI Liquid Redox Conference.

50. DeBerry, D.W., "Chemical Issues and Evolution of Liquid Redox Sulfur Recovery Processes" proceedings of the 7th GRI Sulfur Recovery Conference, Austin, Texas, Sept 1995, p. 453.

51. Hardison, L.C., "Catalytic Gas Sweetening Process Selectively Converts H_2S to Sulfur, Treats Acid Gas," Oil and Gas Journal, p. 60, June 4, 1984.

52. Hardison, L.C., "Treating Hydrogen Sulfide: An Alternative to Claus," Chemical Engineering, p. 62, January 21, 1985.

53. Hardison, L.C., "Go From H_2S to S in One Unit," Hydrocarbon Processing, p. 70, April, 1985.

54. Ballaguet, J.P. et al., "Direct H_2S Removal from High Pressure Natural Gas with the Sulfint HP Redox Process," presented at Sulfur 99, Calgary, Alberta, Canada.

55. Ballaguet, J.P. and Streicher, C., "Pilot Operating Experience with a New Redox Process for the Direct High Pressure Removal of H_2S," 80th GPA Annual Convention, San Antonio, Texas, March 2001.

56. Schell, W.J. and Hoernschemeyer, D.L., "Principles of Membrane Gas Separation," Separex Corporation, AICHE Symposium, June 1982.

57. Goddin, C.S., "Comparison of Processes for Treating Gases with High CO_2 Content," 61st Annual GPA Convention, March 1982.

58. Stiltner, J., "Mercury Removal from Natural Gas and Liquid Streams," proceedings of the 81st GPA Annual Convention, Dallas, Texas, March 2002.

59. Cameron, C.J., Barthel, Y. and Sarrazin, P., "Mercury Removal from Wet Natural Gas," proceedings of the 73rd GPA Annual Convention, New Orleans, March 1994, p. 256.

60. Clarke, M.A. et.al., "Designing an Optimized Injection Strategy for Acid Gas Disposal without Dehydration" proceedings of the 78th GPA Annual Convention, Nashville, TN, March 1999, p. 49.

61. Lock, B.W., "Acid Gas Disposal: a Field Perspective," proceedings of the 76th GPA Annual Convention, San Antonio, Texas, March 1997, p. 161.

62. Carroll, J.J. and Maddocks, J.R., "Design Considerations for Acid Gas Injection," Laurance Reid Gas Conditioning Conference, Norman, Oklahoma, March 1999.

63. Wichert, E. and Royan, T., "Acid Gas Injection Eliminates Sulfur Recovery Expense," Oil & Gas Journal, April 28 1997, p. 67.

64. Koch Engineering Company, Bulletin KSM-5, 1986.

65. Perry, R.H. and Chilton, C.H., *Chemical Engineer's Handbook*, 5th Edition, McGraw Hill Book Co., NY, 1973, p. 21-19.

66. Russell, Richard M., "Liquid-Liquid Contactors Need Careful Attention," Oil & Gas Journal, December 1, 1980, p. 135.

67. Mick, M.B., "Treat Propane for COS Removal," Hydrocarbon Processing, July 1976, p. 137.

68. McClure, G.P. and Morrow, D.C., "Amine Process Removes COS from Propane Economically," Oil and Gas Journal, July 2, 1979, p. 107.

69. Weber, S. and McClure, G., "New Amine Process for FCC Desulfurizes Light Liquid Streams," Oil and Gas Journal, June 8, 1981, p. 161.

70. Klen, J.P., "Developments in Sulfinol and ADIP Processes Increases Uses," Oil and Gas International, September 1970, p. 34.

71. Process Industries Corrosion, NACE Publication, 1986, p. 298.

72. Wizig, H.W., "An Innovative Approach for Removing CO_2 and Sulfur Compounds From a Gas Stream," Gas Conditioning Conference, Norman, Oklahoma, March 4, 1985.

73. Beychok, M.R., *Aqueous Wastes from Petroleum and Petrochemical Plants*, John Wiley, pp. 113-143 (1973).

74. Lidal, H. Nilsen, J.I., Isaksen, H. and Hoang-Dinh, V., "CO_2 Removal at Sleipner," Laurance Reid Gas Conditioning Conference University of Oklahoma, March 1998.

75. Nilsen,F.P., Lidal,H., and Linga, H. "Selective H_2S Removal in 50 Milliseconds," presented at the GPA Europe annual conference in Amsterdam, The Netherlands, September 26-28, 2001.

76. Menzel, J. and Tondorf, O., "A Cost Effective Physical Solvent Process for Acid Gas Removal," presented at the GPA Europe spring meeting in Aberdeen, Scotland, May 17-19, 2000.

77. Lallemand,F. and Minkkinen,A., " Highly Sour Gas Processing in an Ever-Greener World," presented at the 80th Annual GPA convention in San Antonio, Texas, March 12-14, 2001.

78. Sterner, Anthony J. "Acid Gas Fractionation," Laurance Reid Gas Conditioning Conference 2001 Proceedings, February 25-28 2001, p. 17.

79. Dalrymple,D.A. and Srinivas, G., "CrystaSulf Liquid Redox and TDA Gas Phase H_2S Conversion Technologies for Sour Gas Treating," GPA 78th Annual Convention, March 1-3, 1999, Nashville, Tennessee.

80. McIntush, K.E. et al., "Status of the First Commercial Applications of the CrystaSulf," 81st GPA Annual Convention, Dallas, Texas, March 2002.

81. Mitariten, M.,Dolan, W., and Maglio, A., "Innovative Molecular Gate Systems for Nitrogen Rejection Carbon Dioxide Removal and NGL Recovery," 81st GPA Annual Convention, Dallas, Texas, March 2002.

82. Stuksrud, D.B. and Dannstrom, H., "Membrane Gas-Liquid Contactor for Natural Gas Sweetening," GPA Europe Spring Meeting, Aberdeen, Scotland, May 17-19, 2000.

83. Gall, G.H. and Sanders, E.S., "Removal of Carbon Dioxide from Liquid Ethane Using Membrane Technology," 81st GPA Annual Convention, Dallas, Texas, March, 2002.

84. Fisher, K.S., Killion, S.J., and Lundeen, J.E. "GRI Field Testing of Direct-Injection H_2S Scavenging" presented at the 78th Annual GPA convention in Nashville, Tennessee, March 1-3, 1999.

85. Knudsen, B. and Mo, A.F., "Use H_2S Scavenger for Onshore Applications," GPA Europe annual conference, Rome, Italy, September 25-27, 2002.

86. Haut, R.C., Denton, R.D., and Thomas, E.R., "Development and Application of the Controlled-Freeze-Zone Process," SPE Production Engineering, Aug. 1989, p. 265.

BIBLIOGRAPHY

1. Kohl, A.L. and Nielsen R.B., *Gas Purification*, Gulf Publishing Co., 5th Edition 1997.

2. Newman, S.A., Editor, *Acid and Sour Gas Treating Processes*, Gulf Publishing Co. (1985).

3. *Dow Gas Conditioning Fact Book*, Dow Chemical Co., 1962.

4. Campbell, J.M., *Gas Conditioning and Processing*, Vol. I and II, 6th Edition, 1988, Campbell Petroleum Series.

GPA RESEARCH REPORTS

Listed below are GPA Research Reports that deal with amine enthalpies and acid gas equilibrium.

Report No.	Report Title
RR-85	Enthalpies of Solutions of CO_2 in Aqueous Diglycolamine® Solutions - Scott P. Christensen, James J. Christensen and Reed M. Izatt, Brigham Young University, Provo, Utah. Project 821-84.
RR-102	Enthalpies of Solution of CO_2 in Aqueous Methyldiethanolamine Solutions - Keith E. Markley, James J. Christensen and Reed M. Izatt, Brigham Young University, Provo, Utah. Project 821.
RR-104	Equilibrium Solubility of Carbon Dioxide or Hydrogen Sulfide in Aqueous Solutions of Monoethanolamine, Diglycolamine, Diethanolamine and Methyldiethanolamine - R.N. Maddox, A.H. Bhairi, James R. Diers and P.A. Thomas, Oklahoma State University, Stillwater, Oklahoma. Project 841.
RR-108	Enthalpies of Solution of CO_2 in Aqueous Diethanolamine Solutions - Rebecca Helton, James J. Christensen and Reed M. Izatt, Brigham Young University, Provo, Utah, Project 821-86.
RR-114	Enthalpies of Solution of H_2S in Aqueous Diethanolamine Solutions - Rebecca Van Dam, James J. Christensen, Reed M. Izatt, and John L. Oscarson, Brigham Young University, Provo, Utah. Project 821.
RR-124	Equilibrium Solubility of CO_2 or H_2S in Protonated Solutions of DEA at Low Partial Pressures - R. N. Maddox and E. M. Elizondo, Oklahoma State University, Stillwater, Oklahoma. Project 841.
RR-125	Equilibrium Solubility of CO_2 or H_2S in Protonated Solutions of DEA - R. N. Maddox, M. Abu-Arabi and E. M. Elizondo, Oklahoma State University, Stillwater, Oklahoma. Project 841.
RR-127	Enthalpies of Solution of H_2S in Aqueous Methyldiethanolamine Solutions - J. L. Oscarson, and R. M.Izatt, Brigham Young University, Provo, Utah. Project 821.
RR 151	Reaction Kinetics of CO_2 with MEA, DEA, and MDEA and in MDEA Based Blends - Ralph W. Weiland, Optimized gas Treating Inc. Houston, Texas. Project 911.
RR 152	Physical Properties of MEA, DEA, MDEA and MDEA Based Blends - Ralph W. Weiland, Optimized gas Treating Inc. Houston, Texas. Project 911.
RR 153	Enhanced Factors for Acid Gas Removal with Single and Mixed Amines - Ralph W. Weiland, Optimized gas Treating Inc. Houston, Texas. Project 911.

SECTION 22

Sulfur Recovery

Sulfur is present in natural gas principally as hydrogen sulfide (H_2S) and, in other fossil fuels, as sulfur-containing compounds which are converted to hydrogen sulfide during processing. The H_2S, together with some or all of any carbon dioxide (CO_2) present, is removed from the natural gas or refinery gas by means of one of the gas treating processes described in Section 21. The resulting H_2S-containing acid gas stream is flared, incinerated, or fed to a sulfur recovery unit. This section is concerned with recovery of sulfur by means of the modified Claus and Claus tail gas clean-up processes. Redox processes are touched upon. For a discussion and description of other sulfur recovery processes, see Maddox[1].

THE CLAUS PROCESS

The Claus process as used today is a modification of a process first used in 1883 in which H_2S was reacted over a catalyst with air (oxygen) to form elemental sulfur and water.

$$H_2S + \tfrac{1}{2}\,O_2 \rightarrow S + H_2O \qquad \textbf{Eq 22-1}$$

Control of this highly exothermic reaction was difficult and sulfur recovery efficiencies were low. In order to overcome these process deficiencies, a modification of the Claus process was developed and introduced in 1936 in which the overall reaction was separated into (1) a highly exothermic thermal or combustion reaction section in which most of the overall heat of reaction (from burning one-third of the H_2S and essentially 100% of any hydrocarbons and other combustibles in the feed) is released and removed, and (2) a moderately exothermic catalytic reaction section in which sulfur dioxide (SO_2) formed in the combustion section reacts with unburned H_2S to form elemental sulfur. The principal reactions taking place (neglecting those of the hydrocarbons and other combustibles) can then be written as follows:

Thermal or Combustion Reaction Section

$$H_2S + 1\tfrac{1}{2}\,O_2 \rightarrow SO_2 + H_2O \qquad \textbf{Eq 22-2}$$

ΔH @ 77°F $\approx -223\ 100$ Btu

Combustion and Catalytic Reaction Sections

$$2\ H_2S + SO_2 \rightarrow \frac{3}{x}\,S_x + 2\ H_2O \qquad \textbf{Eq 22-3}$$

ΔH @ 77°F $\approx -41\ 300$ Btu

Overall Reaction

$$3\ H_2S + 1\tfrac{1}{2}\,O_2 \rightarrow \frac{3}{x}\,S_x + 3\ H_2O \qquad \textbf{Eq 22-4}$$

ΔH @ 77°F $\approx -264\ 400$ Btu

This is a simplified interpretation of the reaction actually taking place in a Claus unit. The reaction equilibrium is complicated by the existence of various species of gaseous sulfur (S_2, S_3, S_4, S_5, S_6, S_7, and S_8) whose equilibrium concentrations in relation to each other are not precisely known for the entire range of process conditions. Furthermore, side reactions involving hydrocarbons, H_2S, and CO_2 present in the acid gas feed can result in the formation of carbonyl sulfide (COS), carbon disulfide (CS_2), carbon monoxide (CO), and hydrogen (H_2). Gamson and Elkins[2] cover the basic theory involved in the Claus process; however, they ignore the many potential side reactions and also the existence of S_3, S_4, S_5, and S_7.

For the usual Claus plant feed gas composition (water-saturated with 30-80 mol % H_2S, 0.5-1.5 mol % hydrocarbons, the remainder CO_2), the modified Claus process arrangement results in thermal section (burner) temperatures of about 1800 to 2500°F. The principal molecular species in this temperature range is S_2 (Fig. 22-20) and conditions appear favorable for the

FIG. 22-1

Nomenclature

H = heat content or enthalpy, Btu/lb or Btu/lb-mole

K_p = equilibrium constant

For the low pressure, vapor phase Claus reaction

$$2\ H_2S + SO_2 \rightarrow 2\ H_2O + \frac{3}{x}\,S_x$$

$$K_p = \frac{(P_{H_2O})^2\,(P_{S_x})^{3/x}}{(P_{H_2S})^2\,(P_{SO_2})} = \frac{[\text{Mols } H_2O]^2\,[\text{Mols } S_x]^{3/x}}{[\text{Mols } H_2S]^2\,[\text{Mols } SO_2]}\left[\frac{\pi}{\text{Total Mols}}\right]^{\frac{3}{x}-1}$$

LT/D = long ton per day. A long ton is 2240 pounds.

P = partial pressure, atmospheres

π = total pressure, atmospheres

Acid Gas: feed stream to sulfur recovery plant consisting of H_2S, CO_2, H_2O, and usually less than 2 mol % hydrocarbons.

Claus Process: a process in which ⅓ of the H_2S in the acid gas feed is burned to SO_2 which is then reacted with the remaining H_2S to produce sulfur. This is also referred to as the modified Claus process.

Residence Time: the period of time in which a process stream will be contained within a certain volume or piece of equipment, seconds.

Tail Gas Cleanup Unit: a process unit designed to take tail gas from a Claus sulfur recovery plant and remove additional sulfur with the goal of meeting environmental sulfur emission standards.

formation of elemental sulfur by direct oxidation of H_2S (Eq 22-5) rather than by the Claus reaction (Eq 22-6).

$$2\,H_2S + O_2 \rightarrow 2\,H_2O + S_2 \qquad \textbf{Eq 22-5}$$

$$\Delta H\ @\ 77°F = -135\,200\ Btu$$

$$2\,H_2S + SO_2 \rightarrow 2\,H_2O + \frac{3}{2}\,S_2 \qquad \textbf{Eq 22-6}$$

$$\Delta H\ @\ 77°F = +20\,400\ Btu$$

However, both laboratory and plant measurements indicate the more highly exothermic oxidation of H_2S to SO_2 (Eq 22-2) predominates and the composition of the equilibrium mixture therefore is determined by the slightly endothermic Claus reaction (Eq 22-6).

Fig. 22-2 is a representation of theoretical equilibrium conversion as a function of temperature for

- An acid gas from a wellhead-type treater, with about 3.5 mol % hydrocarbons (Curve 1)
- An acid gas from a refinery treater, with about 7 mol % hydrocarbons and 1 mol % mercaptans (Curve 2)
- Pure H_2S (Curve 3)

These curves indicate:

- Sulfur recovery would be expected to be lower for a feed gas from a refinery than for a wellhead treater because of higher hydrocarbon content
- The calculated equilibrium conversion for both acid gas feeds follows closely the idealized curve for pure H_2S
- Conversion of H_2S to elemental sulfur is favored in the reaction furnace by higher operating temperatures of 1800°F and in the catalytic converters by lower operating temperatures of less than 700°F.

To attain an overall sulfur recovery level above about 70%, the thermal, or combustion, section of the plant is followed by one or more catalytic reaction stages. Sulfur is condensed and separated from the process gases after the combustion section and after each catalytic reaction stage in order to improve equilibrium conversion. Although Fig. 22-2 indicates that the Claus reaction is favored by lower temperatures, the process gases must be reheated prior to being fed to the catalytic reaction stage in order to maintain acceptable reaction rates and to ensure that the process gases remain above the sulfur dewpoint as additional sulfur is formed. Fig. 22-3 is the flow sheet of an example three-stage Claus sulfur recovery plant; Fig. 22-4 shows the mechanical arrangement of an example small, package-type, two-stage Claus plant.

Gases leaving the final sulfur condensation and separation stage may require further processing. These requirements are established by local, state, or national regulatory agencies. These requirements can be affected by the size of the sulfur recovery plant, the H_2S content of the plant feed gas, and the geographical location of the plant.

CLAUS PROCESS CONSIDERATIONS

The Claus sulfur recovery process includes the following process operations:

- Combustion — burn hydrocarbons and other combustibles and 1/3 of the H_2S in the feed.
- Waste Heat Recovery — cool combustion products. Because most Claus plants produce 150-500 psig steam (365-470°F), the temperature of the cooled process gas stream is usually about 600-700°F.
- Sulfur Condensing — cool outlet streams from waste heat recovery unit and from catalytic converters. Low

FIG. 22-2

Theoretical Equilibrium Percent Conversion of Hydrogen Sulfide to Sulfur[3]

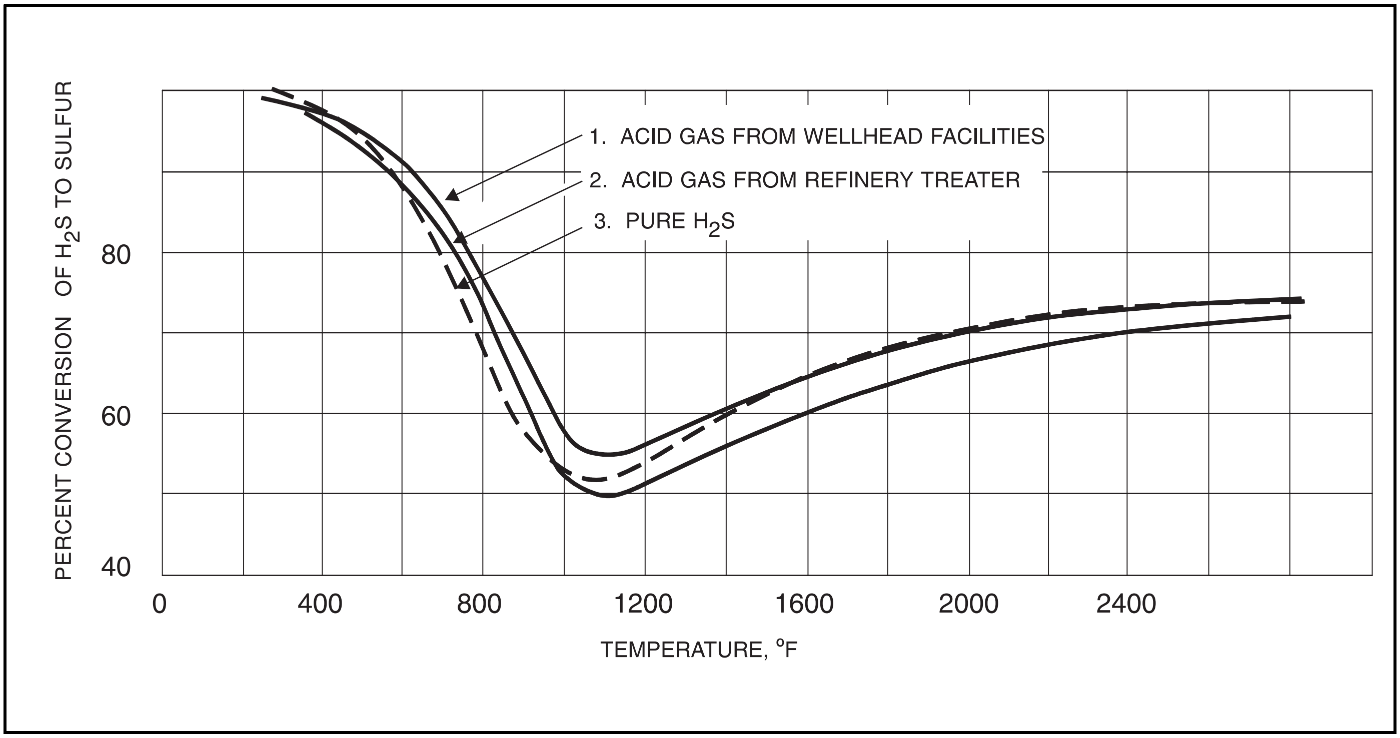

FIG. 22-3

Example Three-Stage Sulfur Plant
(Straight-Through Operating with Acid Gas-Fueled Inline Burners for Reheating)

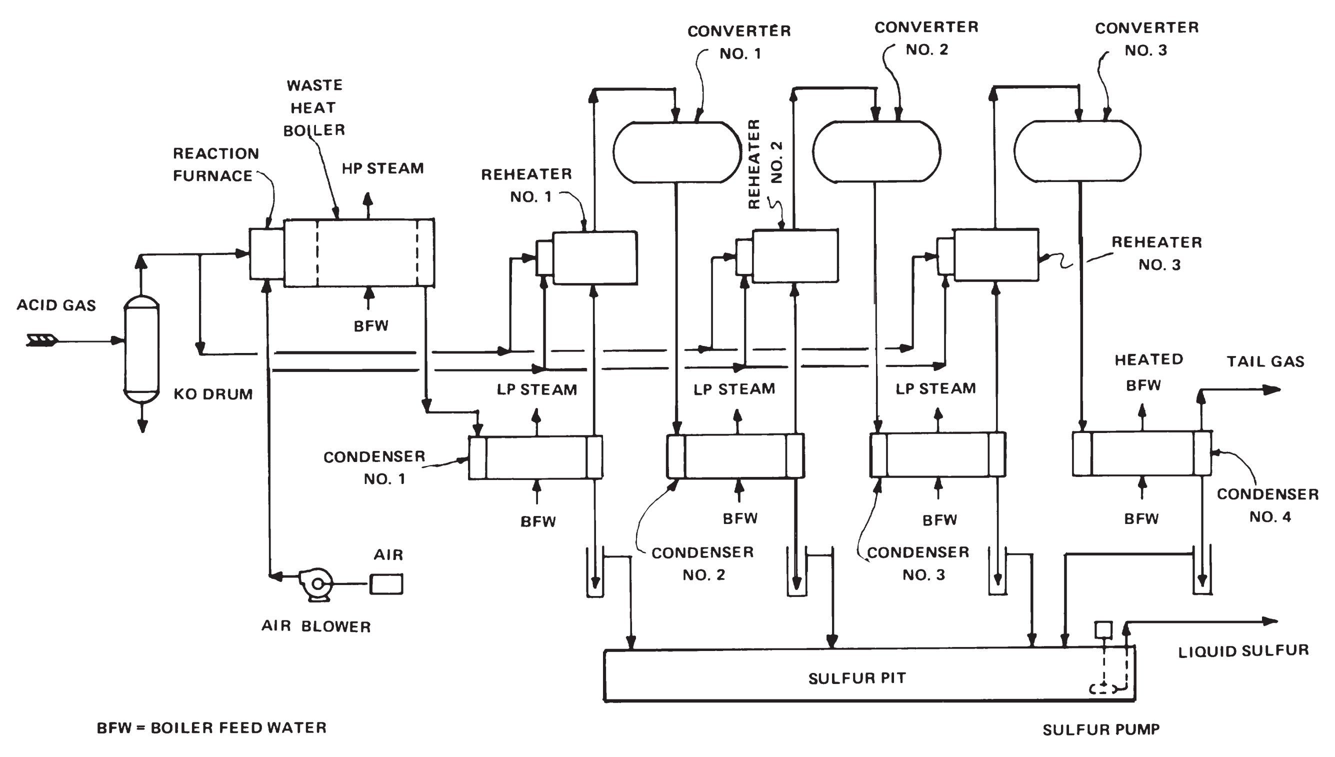

FIG. 22-4

Example Package-Type Sulfur Plant

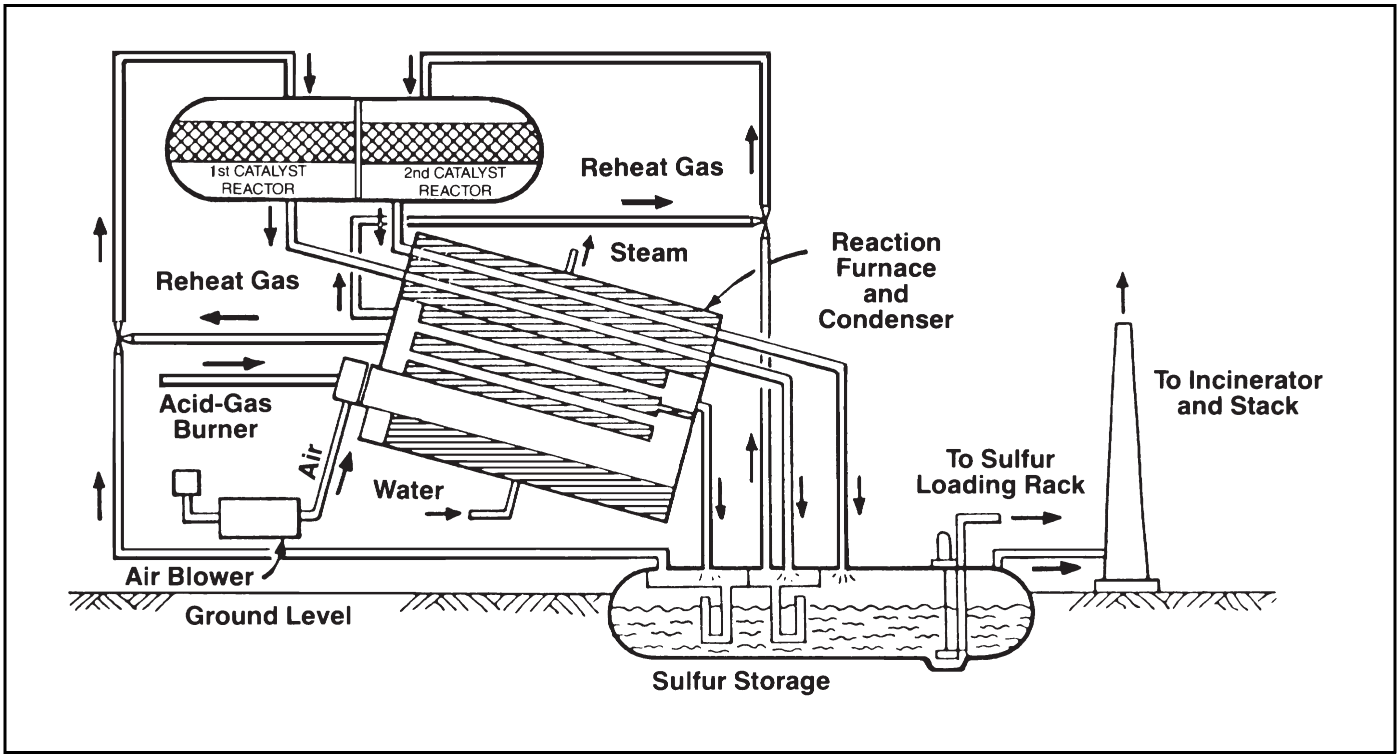

pressure steam at 50-70 psig is often produced and the temperature of the cooled gas stream is usually about 350°F or 260-300°F for the last condenser.

- Reheating — Reheat process stream, after sulfur condensation and separation, to a temperature high enough to remain sufficiently above the sulfur dewpoint, and generally, for the first converter, high enough to promote hydrolysis of COS and CS_2 to H_2S and CO_2.

$$COS + H_2O \rightarrow CO_2 + H_2S \qquad \textbf{Eq 22-7}$$

$$CS_2 + 2\,H_2O \rightarrow CO_2 + 2\,H_2S \qquad \textbf{Eq 22-8}$$

- Catalytic Conversion — Promote reaction of H_2S and SO_2 to form elemental sulfur (Eq 22-3)

Process Variations

Several variations of the basic Claus process have been developed to handle a wide range of feed gas compositions. Some of these are shown in Fig. 22-5. Straight-through operation results in the highest overall sulfur recovery efficiency and is chosen whenever feasible.

Fig. 22-6 can be used as a guide in Claus process selection.

Combustion Operation

Most Claus plants operate in the "straight-through" mode. The combustion is carried out in a reducing atmosphere with only enough air (1) to oxidize one-third of the H_2S to SO_2, (2) to burn hydrocarbons and mercaptans, and (3) for many refinery Claus units, to oxidize ammonia and cyanides. Air is supplied by a blower and the combustion is carried out at 3-14 psig, depending on the number of converters and whether a tail gas unit is installed downstream of the Claus plant.

Numerous side reactions can also take place during the combustion operation, resulting in such products as hydrogen (H_2), carbon monoxide (CO), carbonyl sulfide (COS), and carbon disulfide (CS_2). Thermal decomposition of H_2S appears to be the most likely source of hydrogen since the concentration of H_2 in the product gas is roughly proportional to the concentration of H_2S in the feed gas. Formation of CO, COS, and CS_2 is related to the amounts of CO_2 and/or hydrocarbons present in the feed gas. Plant tests indicate concentrations of H_2 and CO in the product gas to be approximately at equilibrium at reaction furnace temperatures; Fig. 22-7 indicates potential COS and CS_2 formation in the Claus furnace.

Heavy hydrocarbons, ammonia, and cyanides are difficult to burn completely in a reducing atmosphere. Heavy hydrocarbons may burn partially and form carbon which can cause deactivation of the Claus catalyst and the production of off-color sulfur. Ammonia and cyanides can burn to form nitric oxide (NO) which catalyzes the oxidation of sulfur dioxide (SO_2) to sulfur trioxide (SO_3); SO_3 causes sulfation of the catalyst and can also cause severe corrosion in cooler parts of the unit. Unburned ammonia may form ammonium salts which can plug the catalytic converters, sulfur condensers, liquid sulfur drain legs, etc. Feed streams containing ammonia and cyanides are sometimes handled in a special two-combustion stage burner or in a separate burner to ensure satisfactory combustion.

Flame stability can be a problem with low H_2S content feeds (a flame temperature of about 1800°F appears to be the mini-

FIG. 22-5

Claus Process Variations

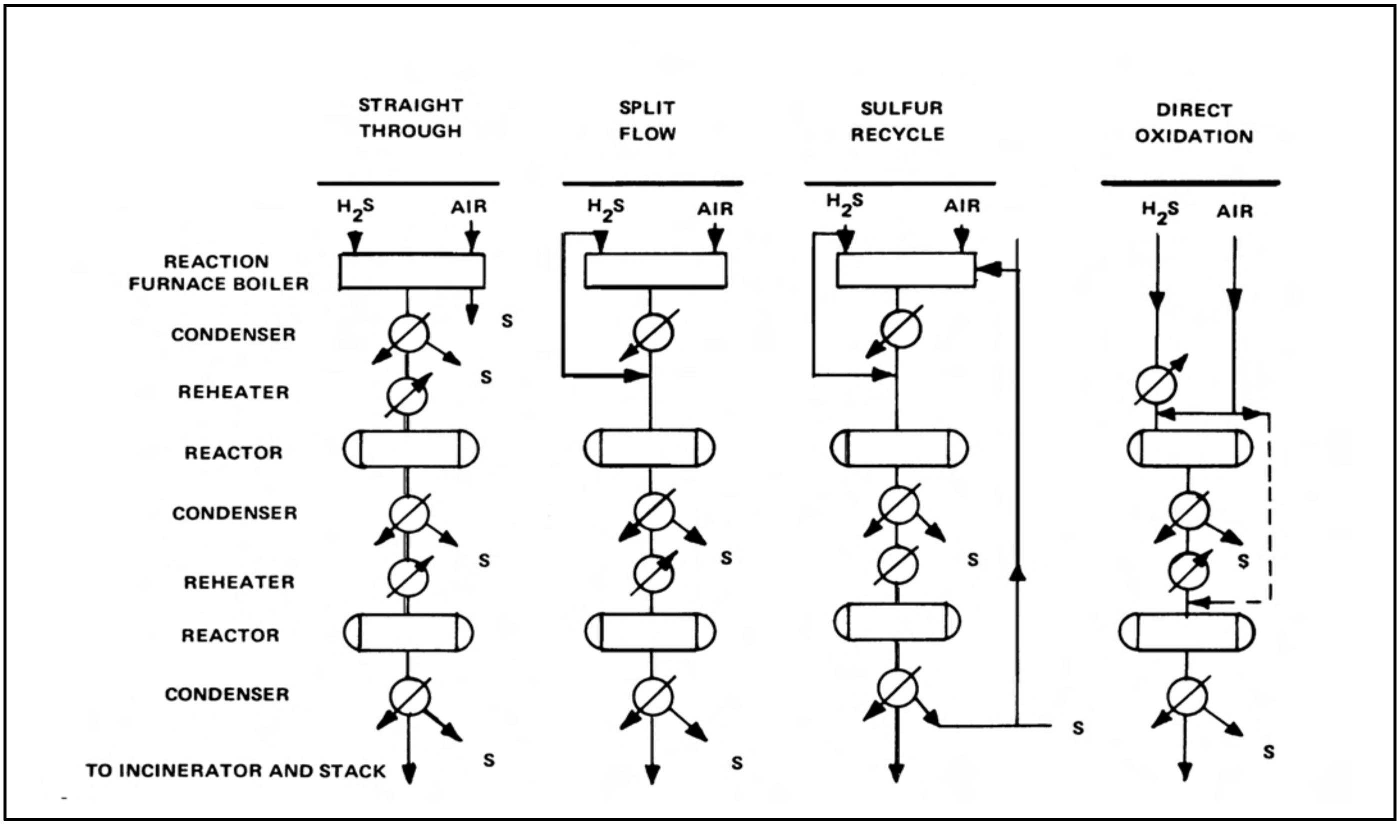

mum for stable operation). The split flow, sulfur recycle, or direct oxidation process variations often are utilized to handle these H_2S-lean feeds; but in these process schemes, any hydrocarbons, ammonia, cyanides, etc. in all or part of the feed gas are fed unburned to the first catalytic converter. This can result in the cracking of heavy hydrocarbons to form carbon or carbonaceous deposits and the formation of ammonium salts, resulting in deactivation of the catalyst and/or plugging of equipment. A method of avoiding these problems while still improving flame stability is to preheat the combustion air and/or acid gas, and to operate "straight-through". An example of such an arrangement is shown in Fig. 22-8. Steam-, hot oil-, or hot gas-heated exchangers and direct fired heaters have been used. The air and acid gas are usually heated to about 450-500°F. Sometimes split flow is combined with acid-gas preheat. Other methods of improving flame stability are to use a high intensity burner, to add fuel gas to the feed gas, or to use oxygen or oxygen-enriched air for combustion.

Fig. 22-33 gives the theoretical flame temperature for a straight-through operation and for a split-flow operation with two-thirds of the acid gas bypassing the combustion section. For each operation there are isotherms, which represent the temperature of the acid gas feeding the combustion section. The isotherms for temperatures above 110°F represent acid-gas preheat. For the split-flow operation, the part of the acid gas that bypasses the combustion section is not preheated. This figure can also be used for combinations of straight through and split flow. In this case, the split flow (i.e., the amount of acid-gas bypass) should be minimized, which will maximize the overall sulfur recovery and minimize the problems associated with acid-gas bypass that are mentioned in the foregoing paragraph. For acid-gas temperatures different than the isotherm values, and for acid-gas bypasses less than two thirds, corresponding flame temperatures can be estimated by linear extrapolation/interpolation of the curves.

Waste Heat Recovery Operation

Most Claus plants cool the process gases leaving the combustion section by generating steam in a fire-tube waste heat boiler. Steam pressures usually range between 150 psig and 500 psig. The waste heat boiler outlet temperature is therefore normally above the sulfur dewpoint of the process gases; however, some sulfur may condense, especially during partial loads, and provision should be made to drain this sulfur from the process stream (or the piping should be arranged so the sulfur will drain through downstream equipment).

Other methods of cooling the hot combustion gases include the use of glycol-water mixtures, amine solutions, circulating cooling water (no boiling), and oil baths. The utilization of one of these alternate cooling fluids can be especially advantageous at locations where good quality boiler feed water is not available, or where steam generation is not desired.

Some small Claus units use a closed steam system. Steam is generated at 20-30 psig, condensed with air in an elevated condenser, and the steam condensate returned by gravity to the boiler as feed water.

Sulfur Condenser Operation

Sulfur is condensed ahead of the first catalytic converter (except in the case of split-flow operation) and following each catalytic converter in order to promote the Claus reaction. These condensers (other than the one following the last catalytic converter) are typically designed for outlet temperatures of 330-360°F which results in a condensed liquid sulfur of reasonably low viscosity and a metal skin temperature (on the

FIG. 22-6

Claus Plant Configurations

Feed H_2S Concentration, Mol%	Claus Variation Suggested
55 - 100	Straight-through
30 - 55	Straight-through or straight-through with acid gas and/or air preheat
15 - 30	Split-flow or straight-through with feed and/or air preheat
10 - 15	Split-flow with acid gas and/or air preheat
5 - 10	Split-flow with fuel added or with acid gas and air preheat, or direct oxidation or sulfur recycle
< 5	Sulfur recycle or variations of direct oxidation or other sulfur recovery processes.

FIG. 22-7

Potential COS and CS_2 Formation in Claus Furnaces[19]

Feed composition, mol%				COS, CS_2 formation, % of sulfur in feed[a,b]
Hydrocarbon (as C_3H_8)	Water	CO_2	H_2S	
0	6	4	90	0.5
0	6	14	80	1.5
0	6	24	70	2.5
0	6	34	60	3.5
0	6	44	50	4.5
0	6	54	40	5.5
0	6	64	30	6.5
0	6	74	20	7.5
2	6	4	88	2.0
2	6	14	78	3.0
2	6	24	68	4.5
2	6	34	58	6.0
2	6	44	48	7.0
2	6	54	38	9.0
2	6	64	28	11.0
2	6	74	18	14.0
4	6	4	86	3.5
4	6	14	76	5.0
4	6	24	66	6.0
4	6	34	56	8.0
4	6	44	46	10.0
4	6	54	36	12.0
4	6	64	26	14.0
4	6	74	16	18.0

[a] Maximum. Actual production varies with operating temperature and pressure, residence time, burner mixing and burner efficiency.

[b] Units feeding <30% H_2S may operate other than "straight through," causing reduced COS and CS_2 production proportional to amount fed to main burner.

process gas side) above the sulfurous/sulfuric acid dewpoint. The final sulfur condenser outlet temperature can be as low as 260°F, depending on the cooling medium available. A large temperature difference between process gases and cooling medium should be avoided, however, because of the possible formation of sulfur fog; this is especially important for the final sulfur condenser.

Reheating Operation

The temperature of the process gas at the inlet of the catalytic converters should be such that the effluent gas temperature is

- Higher (25-30°F) than the expected outlet sulfur dewpoint
- As low as possible to maximize H_2S conversion but high enough to obtain a satisfactory Claus reaction rate
- High enough for hydrolysis of COS and CS_2 (for the first catalytic converter only)

Fig. 22-9 shows the methods of reheat commonly used.

- The hot gas bypass method takes a slip-stream of hot process gases from the waste heat recovery unit, usually at 900°F to 1200°F, and mixes this stream with the sulfur condenser outlet gases upstream of the catalytic converter.
- The direct fired method of reheating uses inline burners burning either fuel gas or acid gas, with the combustion products being mixed with the sulfur condenser outlet gases.
- The indirect reheat methods use direct fired heaters or heat exchangers to heat the sulfur condenser outlet gases; high pressure steam, hot oil, and hot process gases have been used. Electrical reheating has also been used.

Hot gas bypass reheating is normally the lowest cost alternative, is relatively simple to control, and results in low pressure drop. Its disadvantage is lower overall sulfur recovery, particularly at reduced throughput. The hot gas bypass method is sometimes used for the first two catalytic converters and an indirect method of reheat used for the third converter.

Direct fired reheating uses an inline burner which usually burns a portion of the Claus plant feed gas but which sometimes burns fuel gas. This reheating method can be designed to heat the process gases to any desired temperature level. Pressure drop is also relatively low. Potential disadvantages of inline burners are the possible formation of SO_3, if acid gas is burned (sulfates deactivate the catalyst) and of soot, if fuel gas is burned (soot can plug and also deactivate the catalyst). A well-mixed, high-intensity burner capable of operating substoichiometrically without producing soot should be utilized for burning fuel gas. Burner requirements are less stringent for burning acid gas; the H_2S:SO_2 ratio in the inline burner outlet gases is usually maintained at about 1:2 to 1:3. Precautions must be taken, however, to avoid oxygen breakthrough from the inline burners. Oxygen in as low a concentration as 30 ppmv can rapidly sulfate the catalyst.

FIG. 22-8

Sulfur Recovery Process with Acid Gas and Air Preheat

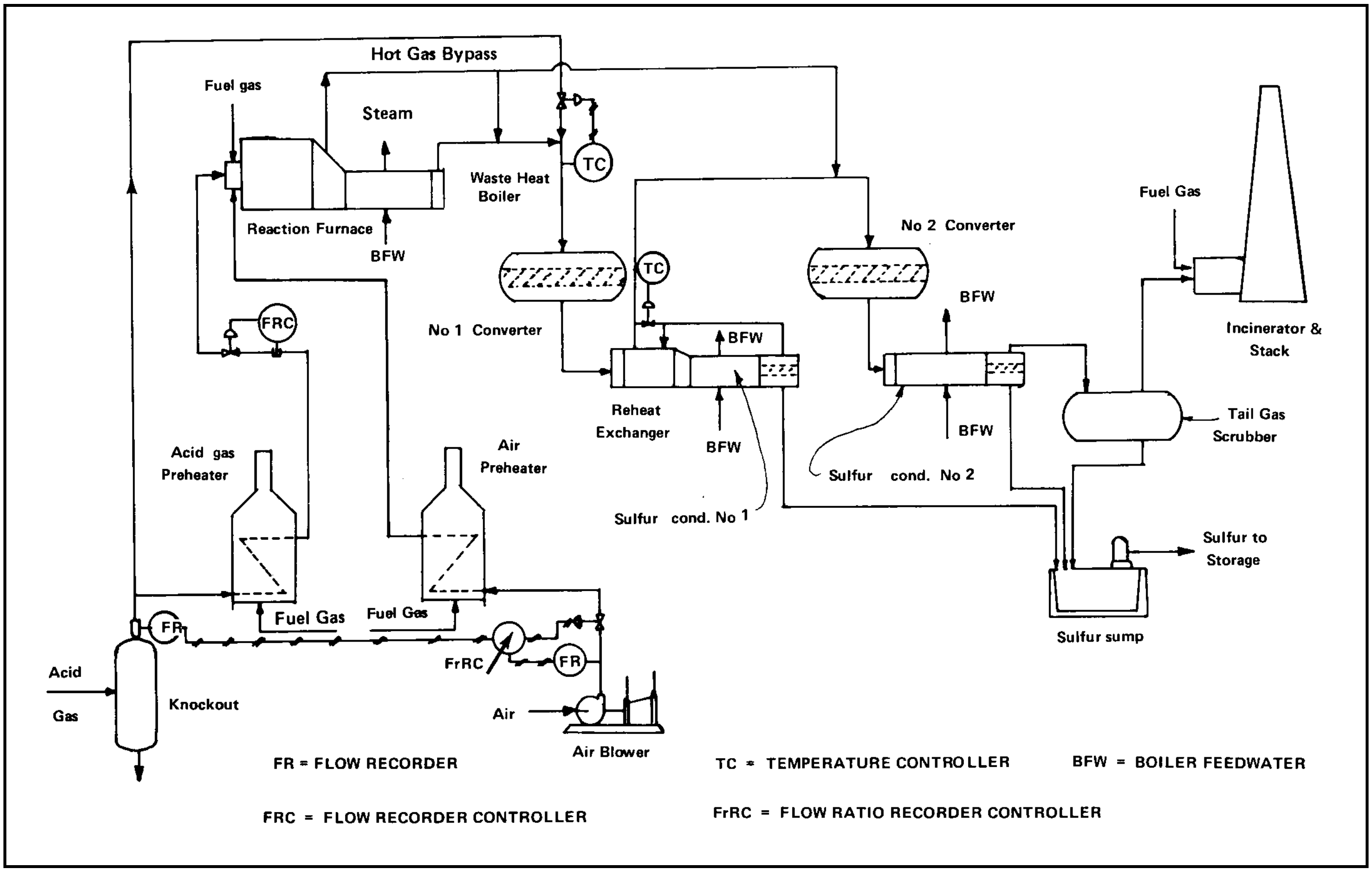

FIG. 22-9

Alternate Methods of Reheating[3]

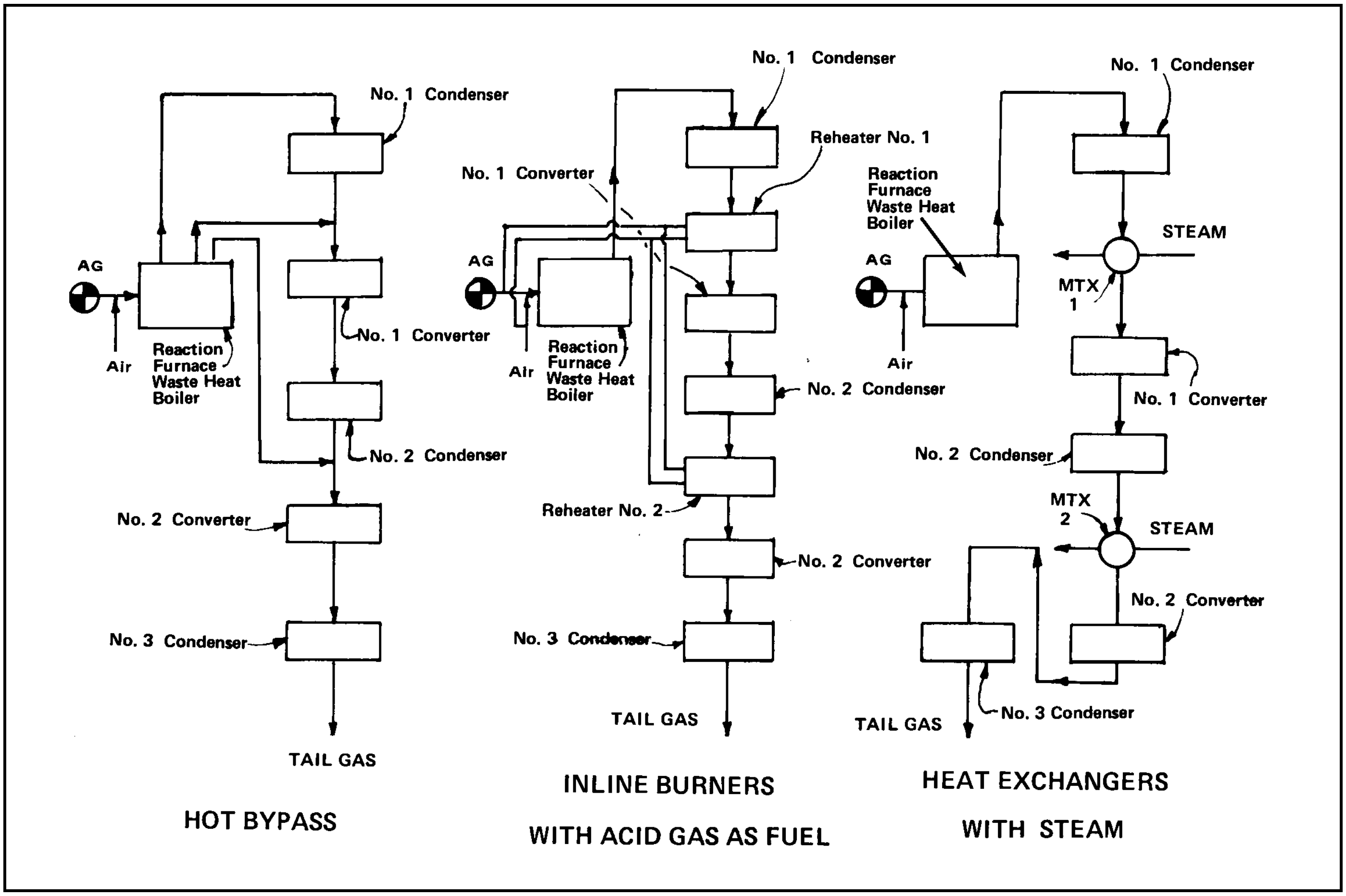

Indirect reheating, which involves a heat exchanger ahead of each catalytic converter, is the most expensive alternative and results in the highest pressure drop. In addition, converter inlet temperatures are limited by the temperature of the heating medium. For example, the use of 600 psig steam (489°F) as the heat source would limit the converter inlet temperature to a maximum of about 470°F. Thus, catalyst rejuvenation is usually not possible and COS and CS_2 hydrolysis may be more difficult. However, indirect reheating usually results in the highest overall sulfur recovery, and deactivation of the catalyst (because of sulfation, carbon deposits, etc.) is less likely to occur.

Catalyst Converter Operation

The Claus reaction is exothermic at converter temperatures, and the reaction equilibrium is favored by lower temperatures. However, carbonyl sulfide (COS) and carbon disulfide (CS_2) hydrolyze more completely at higher temperatures as shown by Fig. 22-10. The first catalytic converter is therefore frequently operated at temperatures high enough to promote the hydrolysis of COS and CS_2; the second and third catalytic converters are operated at temperatures only high enough to obtain acceptable reaction rates and to avoid liquid sulfur deposition and associated catalyst deactivation. A three converter Claus unit will utilize inlet temperatures in the following range: (1) first converter, 450-480°F; (2) second converter, 390-430°F; (3) third converter, 370-410°F.

A temperature rise occurs across each catalytic converter because both the Claus and COS/CS_2 hydrolysis reactions are exothermic. The temperature rise will generally be 80-180°F for the first converter, 25-60°F for the second converter, and 5-15°F for the third converter. Because of heat losses, measured temperatures for the third converter will often show a small temperature drop.

The foregoing is based on using the regular Claus catalyst in all of the converters. Regular catalyst is made of activated alumina (Al_2O_3). The primary function of activated alumina is to increase the rate of the Claus reaction (Eq 22-3) and ensure full equilibrium conversion to sulfur. It also helps hydrolyze the carbon sulfides, COS and CS_2, to H_2S and CO_2 in the first converter (Eq 22-7 and Eq 22-8); but it achieves reasonable hydrolysis only at high temperatures of 600 to 650°F (Fig. 22-10), which reduces the equilibrium conversion to sulfur in the Claus reaction (Fig. 22-2). A catalyst made of activated titania (i.e., titanium dioxide TiO_2) can achieve greater than 90% hydrolysis of the carbon sulfides at temperatures of 600-650°F, and reasonable hydrolysis at lower temperatures where Claus conversion is enhanced. Up to 50% of the sulfur in the plant tail gas can be in the form of carbon sulfides, and therefore titania in the first converter can be a way to achieve higher sulfur recovery. However, titania is very expensive, and can be 10-15 times the cost of activated alumina. Sometimes a combination such as 50-50% activated alumina and titania is used.

FIG. 22-10

Hydrolysis of COS and CS_2 with Activated Alumina Catalyst in Sulfur Converter

$$COS + H_2O = H_2S + CO_2$$

$$CS_2 + 2\ H_2O = 2\ H_2S + CO_2$$

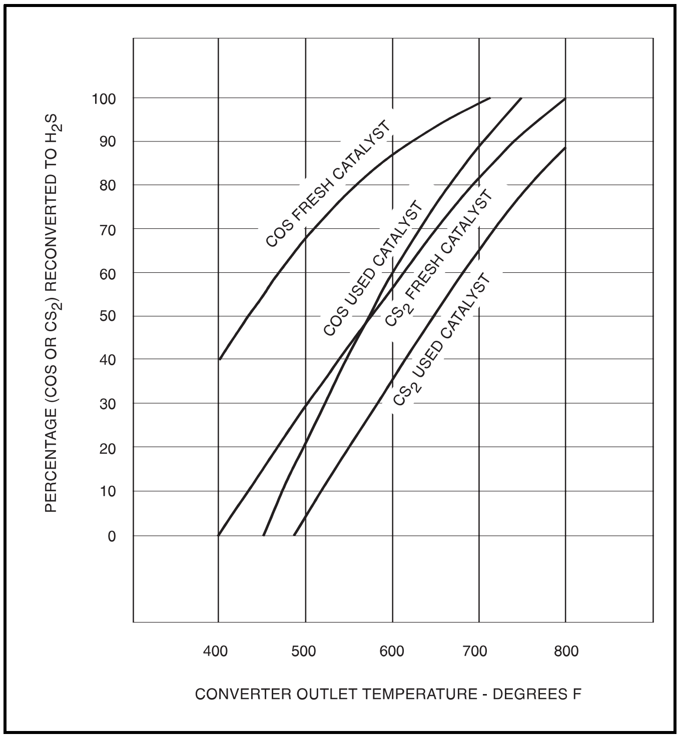

When this is done, the titania should be placed in the bottom of the bed to protect it from contamination.

MECHANICAL CONSIDERATIONS

Combustion Operation

Combustion is carried out in the reaction furnace which may be either external (separate from waste heat recovery facility) or internal (combined with waste heat recovery facility). At the normal operating temperature of 1800-2500°F, external furnaces require a refractory lining to protect the steel shell, but with internal furnaces, the burner is surrounded by the cooling medium and refractory is not required. For small Claus units, an internal furnace is less expensive. For units larger than about 30 LTD, an external furnace is usually more economical.

Reaction furnaces are designed for a residence time of at least 0.5 seconds; plant tests indicate this is adequate to reach equilibrium. Feed gases richer in H_2S generally require less residence time than leaner feeds.

The refractory in the external reaction furnace serves to resist the high flame temperatures and to protect the steel shell. Refractories capable of withstanding high temperatures normally have a high alumina content, e.g., 85-90% alumina. However, these refractories have relatively poor insulating properties and will not provide adequate protection for the steel shell. Therefore, an insulating refractory layer is normally placed against the steel shell, and a layer of high alumina refractory covers the insulating refractory. Occasionally, three different refractories have been used in reaction furnaces. (See Section 8 for additional information regarding refractories.)

Refractory selection and design is important because the steel shell can be overheated (above 650°F) resulting in direct sulfide (H_2S) attack, or can be cooled below the dewpoint of SO_2 and SO_3, resulting in acid condensation and rapid corrosion. External insulation or shrouding for personal protection is often installed to allow metal temperatures above about 400°F, which is generally safely above the acid dewpoint.

Interior refractory checker walls are sometimes installed in external-type reaction furnaces to improve mixing and to serve as a heat buffer. This is of greater importance if ammonia or cyanides or high concentrations of hydrocarbons are present in the feed gas.

Waste Heat Recovery Operation

For most internal reaction furnace-type waste heat recovery units, the acid gas burner is installed inside a single, large, first-pass firetube (radiant section) and the process gas then flows through one or more additional tube passes (convection section). The first pass firetube is cooled externally and therefore does not require refractory protection; however, pass plates and other uncooled metal surfaces exposed to the process gases at temperatures above about 650°F should be protected with refractory. Tube sizes for the convection section passes range from 1" to 6" with a tube mass velocity of 2-5 lb/(sec • ft^2).

External reaction furnace-type waste heat recovery units are usually single pass exchangers with small tubes (2"-3"). The inlet ends of these tubes are exposed to the hot combustion gases (and possibly to the flame). To ensure a reasonable tube life, the inlet end of each tube is protected by inserting a ceramic ferrule that extends about 3"-6" beyond the inside of, and about 3" outside of the tube sheet. This prevents the hot gases from directly contacting the tube at the critical junction of tube and tubesheet. These ceramic ferrules should also be wrapped with a thin layer of insulation (1/8"-3/8" thick). The inlet tube sheet should be protected by a refractory overlay, usually about 3" thick.

Waste heat recovery units are usually designed to meet pressure containment requirements according to Section I of the ASME Code rather than to TEMA standards. A two-pass tube welding procedure is normally used. Conventional practice is to apply the first-pass weld before tube rolling (or after a light rolling), which allows venting to eliminate gas traps. The first-pass weld is usually pressure tested to locate all weld pinholes for repairing prior to subsequent tube rolling and final welding. After final welding, the completed tube attachment is lightly rolled. During the final hydrotest, the tube weld surfaces should be inspected with a dye-penetrant test.

Tube sizes range between 2" and 6". Tube spacing is based on a minimum ligament (distance between outer edge of each tube) dimension of 0.75"-1.0". The design mass velocity in these tubes ranges between 1.0 lb/(sec • ft^2) and 8.0 lb/(sec • ft^2). For most installations, the tube mass velocity will be 2 to 5 lb/(sec • ft^2). Allowable tube side pressure drop often determines tube velocity.

Both kettle-type and natural circulation-type waste heat boilers are used as horizontal units to ensure total submergence of the tubes.

The advantages of the natural circulation-type unit which has a separate elevated steam disengaging drum, include:

- Improved steam quality because of surface blowdown capability and more sophisticated steam/water separation devices.
- More water holdup above the hot process tubes which provides additional time to react to emergency conditions and lessens the chance of tube failure from overheating.
- Better steam/water circulation at the critical tube/tubesheet junction.

The advantages of the kettle-type boilers include:

- Lower installed cost
- Ability to handle a much wider range of load conditions

Both kettle-and natural circulation-type waste heat boilers should be considered as severe-service applications. Some early boilers were designed to TEMA standards and the resulting thick tubesheets together with the high heat flux resulted in failures at the tube-tubesheet juncture.

The tubesheet design is based upon the thermal, mechanical stresses at the tube-tubesheet attachment. Tubesheets are usually thin (3/4" to 1-1/2") resulting in acceptable temperature profiles at the tube weld, the ligaments between tubes, and the portion of tubesheet not cooled by water. The deflection of these thin tubesheets during operation reduces the stress transmitted to the tube-tubesheet attachment. Natural circulation-type units have tube patterns arranged to accommodate the bending stress at the pattern's outer boundaries, while kettle-type units have stayrods to stiffen the portions of the tubesheet without tubes. Waste heat boilers utilizing flexible, thin tubesheets have extremely good service histories.

Sulfur Condenser Operation

Sulfur condensers may be single pass or multi-pass units. Both natural circulation- and kettle-type condensers are used; horizontal units are recommended. Condensers are designed with a minimum tube diameter of 1". Normally 12 BWG steel tubes are used, installed with a 1/2" to 3/4" ligament between tubes.

Sulfur condensers operate at much lower heat fluxes than waste heat boilers and usually operate at lower shell side pressures. Both of these factors significantly reduce the mechanical design requirements for tubesheets and tube attachments. Sulfur condensers are designed to meet either ASME Section I or Section VIII Codes. Tubes are typically rolled, seal welded, and re-rolled.

The design mass velocity for the sulfur condenser tubes varies from 3.0 $lb/(sec \bullet ft^2)$ to 8.0 $lb/(sec \bullet ft^2)$ with a typical minimum mass velocity at design conditions of 5.0 $lb/(sec \bullet ft^2)$. The design mass velocity should be sufficiently high to prevent sulfur fogging from occurring during turndown conditions.[21] If sulfur fogging does occur, the liquid sulfur will not adequately separate from the process gas in the separator downstream of the condenser. The tube velocity is also limited by the allowable tube side pressure drop, which is usually about 0.3 to 0.5 psi.

Sulfur condensers are subject to plugging with solid sulfur. In the design of the plant piping system, the condensers should be the low points in the system and should also slope toward the outlet end. This allows any liquid sulfur present upstream of the condenser, as well as that formed in the condenser, to drain into the liquid-vapor separator chamber and out through the sulfur drain.

To allow access to the tubes for cleaning and inspection, sulfur condensers should have inspection ports and manways at both ends. Additional access to the tubes should be provided by using bolted cover (end) plates.

Vapor-liquid separator chambers are installed downstream of the sulfur condensers to separate the liquid sulfur from the process gases and to allow the liquid sulfur to drain from the system. These separator chambers can be integral parts of the condenser or separate vessels and may be provided with wire-mesh type mist eliminators or impingement plates to reduce liquid sulfur entrainment. A superficial gas velocity of 20-30 ft/sec is commonly used as a basis for sizing the separator chambers.

Sulfur condensers are usually designed to generate low pressure (20-100 psig) steam on the shell side. The final sulfur condenser is often used to heat boiler feed water, but care must be taken not to over cool the stream and solidify sulfur. Sometimes 15 psig steam is generated, condensed and returned in a closed circuit.

Reheating Operation

Hot Gas Bypass Method — Piping and valves are usually of stainless steel (although sometimes refractory-lined piping is used) in order to handle the hot (900-1200°F) corrosive process gas. An additional valve is sometimes installed in the process stream downstream of the hot gas bypass extraction point in order to improve turndown capability.

Direct (Inline Burner) Method — Inline burners are usually designed to raise the temperature of the process gas at least 50°F above the normal operating inlet temperature of the catalytic converter. This extra heat release capacity is useful during a "heat soak" or catalyst rejuvenation operation. Usually, a portion of the acid gas is burned in the inline burner; however, other fuels, such as natural gas, can be used. The burner is installed in a refractory lined combustion chamber and the hot combustion gases are mixed with the process gas to reach the reactor inlet temperature. The retention time in the mixing chamber is usually between 0.1 and 0.3 seconds.

Indirect (Heating Exchanger) Method — Heat exchangers used for reheating are normally constructed to the same mechanical requirements as sulfur condensers. These exchangers should slope toward the inlet end so any liquid sulfur present can drain back into the liquid-vapor separator located downstream of the upstream sulfur condenser.

Catalyst Converter Operation

Catalytic converters are usually designed for a flow at operating conditions of 700 to 1400 standard ft^3/hr of process gas per cu ft of catalyst bed. Because of pressure drop considerations, this usually results in a bed depth of 3-5 feet. The catalyst is activated alumina (Al_2O_3) or promoted activated alumina which is installed on top of a 3"-6" thick layer of more dense support material. Catalyst density is about 45-53 lb/ft^3; the support medium, which usually has a density of 84-100 lb/ft^3, reduces migration of catalyst and/or catalyst fines from the reactor bed to the sulfur condenser downstream. These catalyst fines can plug the sulfur drain legs and condenser tubes. The catalyst and support material are installed on top of stainless steel wire screens which are tied to carbon steel grating. A minimum of 3" of the support material may be placed on top of the catalyst bed to serve as a gas flow distributor.

For Claus units smaller than about 100 LT/D, the catalyst beds are frequently installed in a single horizontal vessel, with internal partition plates. For larger units, individual catalyst bed vessels are used. Vertical (stacked) beds are sometimes used but this is usually not economical for units smaller than about 800 LT/D. Internal refractory lining of these vessels is not necessary unless it is planned to regenerate the catalyst in place; in this case the grating floor design must also be adequate for the expected elevated temperatures. If internal refractory is not used, a minimum of 3" external insulation is recommended. If a refractory lining is installed, the outside insulation thickness can be reduced to 1"-2". Most converters have internal refractory from the bottom to about 6" above the top of the catalyst bed, which protects against high-temperature upsets.

Nozzles in the bottom of the catalyst bed vessels should be installed flush with the vessel interior.29

Piping

The piping systems in Claus plants which require special attention are liquid sulfur lines and vapor process lines. Since sulfur freezes at about 245°F, liquid sulfur lines must be adequately heated and insulated. Process lines are also insulated to prevent sulfur from condensing and/or desubliming to the solid form and to keep the metal temperature above the dewpoints of sulfurous/sulfuric acids. Process lines operating at temperatures above 650°F are often lined with refractory or, especially in smaller units, are of stainless steel. Vapor process piping must also have proper allowance for thermal expansion. Either convoluted expansion joints or expansion "loops" are used. Convoluted joints should be constructed of series 300 stainless steel, and insulated to prevent either water and/or sulfur condensation. The expansion joints should be installed in vertical pipe runs so, if condensation does occur, the liquid can drain freely. If liquid sulfur does not drain, it could solidify, causing the convolutes to be inoperable. Undrained water results in corrosion because of the acids formed.

Carbon steel process piping is normally adequate. Because a Claus plant operates below 15 psig pressure, schedule 40 pipe is normally used for small lines. For 14" or larger lines, standard weight pipe is adequate. For process lines over 30" in diameter, the piping thickness can be the same as the catalyst bed vessel walls.

Valves should be steel and fully jacketed. Smaller valves usually have integral jackets; large valves may have fabricated jackets. Valves in liquid sulfur service should be full-opening gate or plug type to permit rodding out. Liquid sulfur normally drains by gravity from the condensers into a sulfur collection pit or storage vessel with a liquid sulfur seal on each drain line to prevent gases from escaping to atmosphere. Sulfur drain lines often include both horizontal and vertical sections of piping. Because of potential plugging of these lines, facilities should be installed to clean-out (usually by rodding) these lines to prevent a plugged sulfur drain from causing premature unit shutdown. As shown in Fig. 22-11, these "rodding-out" facilities usually include both horizontal and vertical crosses at each change in piping direction. The crosses are often equipped with external valves. Valves are also often placed in the horizontal sections of the sulfur drain lines to allow easy cleaning of these segments, either mechanically or with steam, while the unit continues to operate.

Each sulfur liquid/vapor separator should have a separate drain line and sulfur seal to facilitate detection of plugging. Each sulfur seal should be equipped with a sight port (oriented away from sidewalks, etc.) so the sulfur draining into the storage pit can be observed. When the flow of liquid sulfur stops, remedial action can be taken to eliminate the restriction or plug so as not to cause additional damage to the plant.

Steam-jacketing is the preferred method of heating liquid sulfur lines. Internal (gut) steam lines are sometimes used, especially for longer lines. Skin Effect Current Tracing (SECT) which utilizes the skin effect phenomenon exhibited when an alternating current passes through a steel pipe has also been used to heat long pipelines. For short lines, steam tracing may be satisfactory. Steam is the most common heating medium, but hot oil can also be used. The liquid sulfur lines should be designed to maintain the sulfur at a minimum temperature of 280°F which corresponds to a steam pressure of at least 50 psig. High pressure steam (above 100 psig) or superheated steam should normally not be used because of the possibility of heating the sulfur into the highly viscous region. (Fig. 22-15)

Since the liquid sulfur is used as a seal to prevent process vapors from being vented to the atmosphere, the "net" liquid column head must be large enough to withstand the maximum expected operating pressure. For most plants this maximum operating pressure is the same as the air blower maximum discharge pressure. The density of liquid sulfur is about 112 lb/ft^3, so for a 10 psi seal, the required "net" sulfur seal depth is 12.8 ft. Minimum safety factors would require at least a 13.0 ft. seal depth, and often an extra 6"-12" is added to the calculated depth to allow for upsets, lower sulfur density, etc.

FIG. 22-11

Typical Relationship of Sulfur Seal and Drain

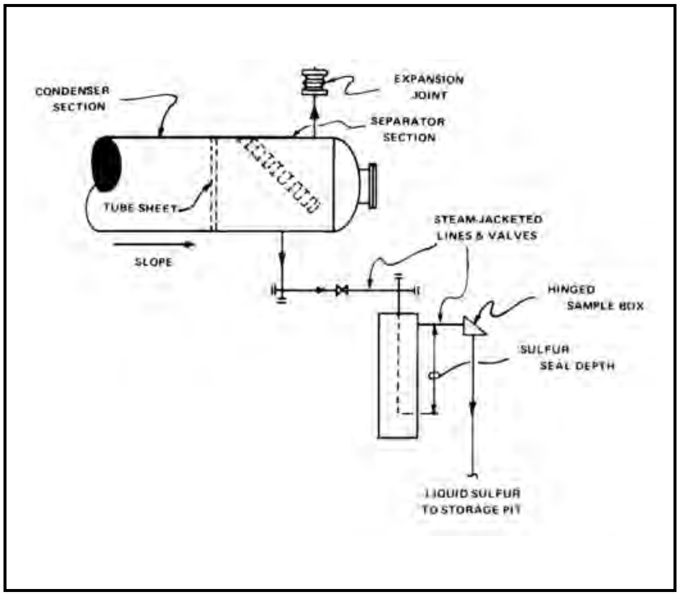

CLAUS UNIT TAIL GAS HANDLING

The tail gas from a Claus unit contains N_2, CO_2, H_2O, CO, H_2, unreacted H_2S and SO_2, COS, CS_2, sulfur vapor, and entrained liquid sulfur. Because of equilibrium limitations and other sulfur losses, overall sulfur recovery efficiency in a Claus unit usually does not exceed 96-97%. Venting of this tail gas stream without further processing is seldom permitted; the minimum requirement is normally incineration, the principal purposes of which are to reduce H_2S concentrations to a low level (which value will depend on the local regulations) and to provide the thermal lift for dispersion of SO_2 upon release to atmosphere through a stack. Depending upon the size of the Claus unit, the H_2S content of the feed gas, and the geographical location, a tail gas cleanup process may be required in order to reduce emissions to the atmosphere.

Incineration

Incineration of the H_2S (as well as the other forms of sulfur) in the Claus plant tail gas to SO_2 can be done thermally or catalytically. Thermal oxidation normally is carried out at temperatures between 900°F and 1500°F in the presence of excess oxygen. Most thermal incinerators are natural draft operating at sub-atmospheric pressure with air flow controlled with dampeners; the excess oxygen level varies between 20% and 100%. A typical concentration of oxygen in the stack effluent is 2.0%. Although the Claus unit tail gas contains some combustibles — for example, H_2S, COS, CO, CS_2, H_2, and elemental sulfur (in the case of "split-flow" plants, some hydrocarbons) — these combustibles are at too low a concentration to burn since they generally amount to less than 3% of the total tail gas stream. The entire tail gas stream must therefore be incinerated at a high enough temperature for oxidation of sulfur and sulfur compounds to SO_2.

Incinerator fuel consumption can be reduced significantly by utilizing catalytic incineration. This involves heating the tail gas stream to about 600-800°F with fuel gas and then passing the heated gas along with a controlled amount of air through a catalyst bed. Catalytic incinerators are normally forced draft, operating at a positive pressure in order to maintain closer control of excess air. Catalytic incineration is a proprietary process which should be considered where fuel costs for conventional (thermal) incineration are high.

Another method of improving overall fuel economy involves recovering heat from the incinerator outlet gases. Saturated steam at pressures ranging between 50 psig and 450 psig has been produced, and saturated steam has been superheated, using waste heat from the incinerator outlet gases. The effect of lower emission temperature upon dispersion of the outlet stream, and therefore upon the required stack height, must be considered in evaluating this alternative. Incinerators with waste heat recovery are normally forced draft operating at a positive pressure.

Fuel required for thermal incineration is determined by the amount of heat needed to heat the Claus tail gas, air, and fuel to the required temperature. Normally the incinerator is sized for at least 0.5 second residence time, and sometimes for as much as 1.5 seconds residence time. Generally, the longer the residence time, the lower the incinerator temperature needed to meet the environmental requirements. This is illustrated by Fig. 22-12 which shows the relationship between residence time and temperature for a typical installation to meet a maximum H_2S requirement of 10 ppmv.

The incinerator and stack can sometimes be combined into a single vessel. The incinerator is the enlarged base, and the smaller diameter stack is mounted on top of the incinerator. The burner is normally mounted horizontally in the side of the incinerator. The tail gas is sometimes fed through the burner, but it can also be fed into the incinerator adjacent to the burner.

Both the incinerator and stack are refractory lined to protect the steel from the high temperatures. This refractory is not as

FIG. 22-12

Typical Relationship Between Incinerator Residence Time and Required Temperature

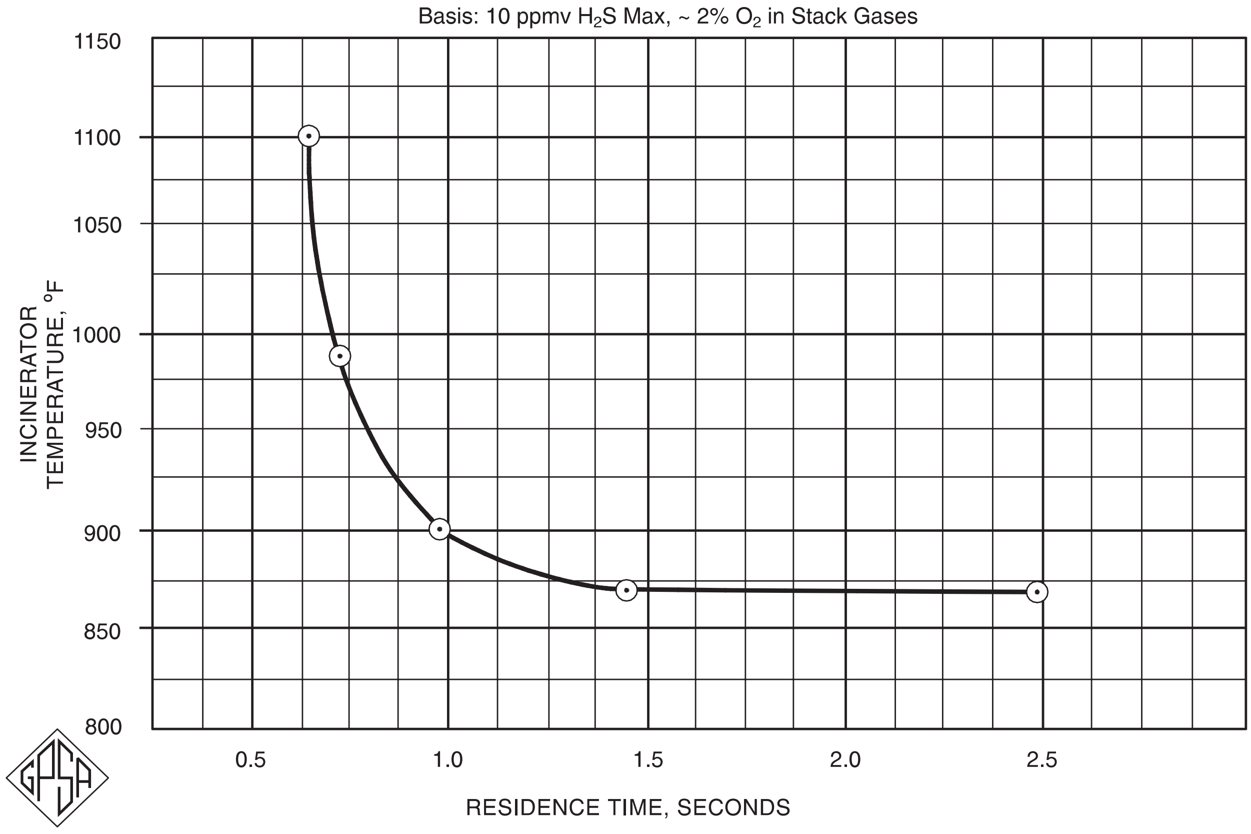

elaborate as that used for the reaction furnace at the front of the Claus unit, because of lower operating temperatures. The incinerator is normally designed for a maximum operating temperature of 2000°F. Refractories rated as low as 2200°F have been used in incinerator-stack installations; one layer of refractory is generally sufficient. The refractory is usually an insulating castable rated for service conditions of 2200°F or above, except where flame impingement is anticipated. A high alumina castable (above 60% alumina) is used in the area of flame impingement.

For vertical incinerators installed at the base of the stack, protection for the incinerator steel floor is important. The best method to protect the floor is to allow for ambient (cooling) air circulation below the floor even though the floor is refractory lined. If there is no cooling below the floor, or if the space is too restricted (too close to grade), the floor refractory usually will not provide adequate protection.

The steel components (floor, walls, stack shell) should be kept below 650-700°F and above 300°F. This requires careful design of both the inside refractory lining and outside insulation. Normally the refractory thickness to protect the incinerator shell (either vertical or horizontal type) will be between 2" and 4", with an average of about 3". The incinerator floor on the vertical style units normally has refractory thicknesses ranging between 4" and 6".

The incinerator and stack should be insulated on the outside to prevent low shell temperatures. This insulation can be in the form of an air gap (usually 3"-4") with either a stainless steel or aluminum sheathing, or can be a thin (1" thick) layer of blanket type insulation covered with either an aluminum or a stainless steel overlay. Care should be taken not to over-insulate because overheating of the steel shell can then result.

Another method of handling potential corrosion of the outside shell of the stack is to make the most critical section of the stack (say the top 15 ft) of unlined and uninsulated stainless steel.

Stacks can be designed as free-standing, guyed, or derrick-supported structures. Selection of the type of stack is dictated by the required stack height diameter and by windload and/or seismic criteria for the particular installation site. A guyed stack is often the most economical design; however, this requires plot space for guy anchors and cables. A free standing steel stack is a common design for heights not exceeding 250 ft. Stacks taller than about 350 feet are usually derrick-supported steel stacks or are free-standing, reinforced concrete stacks. Typical design stack velocities are between 40 ft/sec and 100 ft/sec with allowable pressure drop generally determining the design stack velocity.

Most governmental air control bodies (federal, state, and/or local) require that the emissions from the incinerator-stack system be monitored on a periodic basis. In some areas, stack emissions must be monitored and recorded continuously. The stack should therefore be equipped with platforms, sample nozzles, and utilities located at an appropriate elevation. These design details are specified in current state or Environmental Protection Agency regulations. This equipment permits a periodic measurement of the stack flow rate and stack gas composition, which can be used to determine a reasonably accurate emission rate. Atmospheric emissions usually are expressed in total lb/hr of sulfur dioxide, or expressed as SO_2 concentration in ppmv reported on a water and oxygen free basis. The detailed stack sampling procedures are covered in EPA or state and/or local regulations and procedures.

Where continuous monitoring is required, stack gas analyzers (which measure the amount of SO_2 in the stack gas) are installed on the stack. These instruments are often coupled with a flow measuring instrument so there is a continuous record of both the flow and SO_2 content of the stack gas. This allows the total daily emission level to be determined.

Tail Gas Clean-up Processes

Fig. 22-13 is a summary of some of the available Claus tail gas cleanup (TGCU) processes, not all of which are proven commercially. All of these processes fit roughly into four categories:

- Processes based primarily on the continuation of the Claus reaction to produce additional sulfur under more favorable equilibrium conditions than normally found in the Claus units, either through operation at temperatures below the sulfur dewpoint or in the liquid phase at a temperature above the melting point of sulfur.
- Processes based on converting all the sulfur components in the tail gas to SO_2 and recovering the SO_2 for further processing.
- Processes based on converting all the sulfur in the Claus unit tail gas to H_2S, then recovering sulfur from this H_2S.
- Processes that directly oxidize the tail-gas H_2S to sulphur.

Continuation Processes

The dry-bed subdewpoint processes include CBA (Cold Bed Adsorption) of the United States, Clinsulf of Germany, MCRC (Maximum Claus Recovery Conversion) of Canada, and Sulfreen of France. Generally, the licensors of these processes report sulfur recoveries of 99-99.5%. The processes have not been widely used in the U.S. because the attainable sulfur recovery level will seldom meet local air quality requirements. Incineration of the residue gas is still required and the stack gases from tail gas treaters of this type generally contain 1200-2000 ppmv SO_2.

The IFP process Clauspol II continues the Claus reaction also at subdewpoint, but in the presence of a catalyst containing liquid solvent, which is fed counter-currently with the incoming Claus tail gas in a packed tower. The process operates above the melting point of sulfur so the product sulfur is recovered as a liquid. Any liquid and vapor sulfur present in the Claus tail gas is also recovered. IFP reports sulfur recoveries to 99.8%.

A typical subdewpoint sulfur plant will resemble a conventional Claus plant in the process flow through the waste heat boiler, the first catalytic converter, the first condenser, and the first reheat unit. At this point in the process flow, the subdewpoint plant differs significantly from the conventional Claus plant and the different subdewpoint processes (CBA, Clinsulf, MCRC, and Sulfreen) differ in the downstream process sequencing. Generally one converter in the subdewpoint plants is operating below the dewpoint temperature of sulfur. Other converters may be operating in a cooling or in a regeneration mode. Bed switching is a common feature of these plants so the subdewpoint bed is regenerated periodically. The subdewpoint catalytic converter temperature means a significantly higher equilibrium constant for the Claus reaction, thus resulting in less unreacted H_2S and SO_2 in the tail gas. Like the IFP process, close control of the H_2S:SO_2 ratio is essential for effective subdewpoint operation; and any COS and CS_2 present in process gas pass through to the plant tail gas incinerator.

FIG. 22-13

Claus Tail Gas Clean Up Processes

Claus Tail Gas Cleanup Processes

- Extend Claus Reaction on Solid Bed (sub-dewpoint)
  - — CBA (BP Amoco/Black & Veatch Pritchard/Ortloff)
  - — Clinsulf SDP (Linde AG)
  - — MCRC (Jacobs Canada)
  - — Sulfreen (Lurgi Bamag / SNEA(P))
- Extend Claus Reaction in Liquid Phase Catalyst (sub-dewpoint)
  - — Clauspol 300 (IFP)
- Direct Oxidation to Sulfur
  - — Superclaus 99 (Jacobs Engineering Netherland)
- Oxidize to SO_2, Absorb and Recycle to Claus
  - — Chiyoda Thoroughbred (CT121)
  - — Elsorb (Elkem Technology)
  - — Wellman-Lord (Lurgi Bamag)
- Reduce to H_2S, Absorb and Recycle to Claus
  - — ARCO (ARCO/Black & Veatch Pritchard)
  - — BSR/MDEA (Parsons/UPO)
  - — Clintox (Linde AG)
  - — Exxon Mobil
  - — HCR (Nuovo IGI)
  - — Resulf (TPA)
  - — SCOT (Shell)
- Reduce to H_2S and React/Oxidize to Sulfur
  - — BSR/Selectox (Parsons/UOP)
  - — MODOP (Exxon Mobil)
  - — Superclaus 99.5 (Jacobs Engineering Netherland)

Although the principles of the dry-bed subdewpoint processes are similar, each process claims to have unique and desirable features. The licensors of these processes should be consulted for details.

SO_2 Recovery Processes

The SO_2 recovery processes involve incineration of the Claus tail gas as the first step. This converts essentially all the forms of sulfur to SO_2.

- The Wellman-Lord Process involves using a basic solution to absorb the SO_2 which is generally recovered from the solution as essentially pure SO_2. This SO_2 is available as a liquid or a vapor.
- For small Claus units, a solution of NaOH may be used to scrub SO_2 from the incinerator outlet stream; the resulting sulfite solution after further oxidation to sulfate with air (or another oxidizing agent such as hydrogen peroxide) can be disposed of underground or at an approved disposal facility.

H_2S Recovery Processes

In these processes, essentially all forms of sulfur in the Claus tail gas are converted to H_2S by hydrogenation and hydrolysis. The Beavon-Stretford process then recovers elemental sulfur directly from the H_2S in this tail gas stream in a Stretford unit. The ARCO (Atlantic Richfield), BSR (Beavon Sulfur Removal)-MDEA, Exxon, Resulf and SCOT processes remove the H_2S using an amine solution that is selective for H_2S over CO_2. The H_2S and any coabsorbed CO_2 from the regenerated solution are recycled to the front end of the Claus unit.

BSR-Stretford can reduce the H_2S content in the absorber off gas to 10 ppmv. Generally the amine-based processes (i.e., SCOT et al.), using generic amines such as MDEA without additives, are limited to about 100-150 ppmv. However, using proprietary amines (such as Dow's GAS/SPEC, Exxon's FLEXSORB SE, Shell's SCOT-LSS or Union Carbide's UCARSOL HS 102), these processes can also achieve 10 ppmv H_2S. All of these processes result in overall sulfur recovery in excess of 99.9%. BSR-MDEA was developed by Parsons and Unocal (Unocal's version sold to UOP), SCOT by Shell, and Resulf by TPA.

Direct Oxidation Processes

MODOP (Mobil Oil Direct Oxidation Processes[27]) and SUPERCLAUS 99 and 99.5[28] are Claus TGCU processes that include air oxidation of tail gas H_2S to sulfur using special catalysts. In MODOP, all forms of sulfur in the Claus tail gas are converted to H_2S in a sulfur-reduction (i.e., hydrogenation/hydrolysis) unit. Cooling of the reduction-unit effluent includes direct contact with recirculating water which reduces the water vapor in the effluent to about 5-9%. The effluent combines with air, and enters a MODOP reactor where the H_2S is selectively oxidized to sulfur with the aid of titanium-dioxide catalyst. The prior removal of water vapor in the reduction unit increases the conversion to sulfur. MODOP can achieve 99.5% overall recovery by using three Claus stages followed by sulfur reduction and one MODOP stage, or by using two Claus stages followed by sulfur reduction and two MODOP stages.

SUPERCLAUS 99 does not include a sulfur-reduction unit. Claus tail gas is reheated and mixed with Claus-blower air, and is processed in a SUPERCLAUS reactor employing a proprietary catalyst. SUPERCLAUS 99 achieves up to 99% recovery depending upon the quality of the acid gas and whether there are two or three Claus converters. SUPERCLAUS 99.5 does include a sulfur-reduction unit, and can achieve an overall sulfur recovery of 99.5%. Its description is similar to the MODOP description; however, direct-contact cooling of reduction-unit effluent, with the associated water-vapor removal, is unnecessary because water does not impede SUPERCLAUS catalysis.

Final selection of a tail gas treating process should consider the applicable pollution regulations, initial investment, long term (continuing) operating costs, and the operating advantages and disadvantages of each process. Since these tail gas treating processes are proprietary, the process developer or a contractor authorized to design and install these systems should be consulted for more definitive information.

Liquid Redox

Liquid redox sulfur recovery processes all share the following major operations:

- Removal of the acid gas, H_2S, from a gas stream by absorption into an alkaline solution to form the ions S^{--} and $2H^+$;

- Conversion (i.e. oxidation) of the S^{--} to elemental sulfur (S°) by the action of a redox reagent (i.e. catalyst) such as iron attached to a legend (also called chelant)(i.e. $Fe^{+++}L$) which keeps the iron in solution:

$$S^{--} + 2H^+ + 2Fe^{+++}L \rightarrow S^\circ + 2H^+ + 2Fe^{++}L$$

The reagent is said to be "spent" and the iron "reduced."

- Separation and recovery of solid sulfur. Depending on the regeneration process, this may precede or succeed the next step.
- Regeneration of the spent redox reagent (i.e. $Fe^{++}L$) by reacting it with oxygen dissolved in the solution:

$$\tfrac{1}{2}O_2 + 2H^+ + 2Fe^{++}L \rightarrow H_2O + 2Fe^{+++}L$$

The iron is said to be "oxidized."

Thus the reagent is reduced as it converts H_2S to sulfur and is oxidized as it is regenerated with oxygen/air, and hence the term "redox."

Redox processes can remove and convert to sulfur up to 99.9% of the H_2S in sour natural gas and acid gas. Their turndown capabilities are very good, and they can be designed for large variations in H_2S concentrations. However, the sulfur color is a brown/tan yellow rather than the bright yellow produced in Claus plants. The redox solutions are corrosive, and much of the equipment must be alloy or coated. Also, chemical consumption can be high, and disposal of spent chemicals can be a problem. The solution must usually be analyzed daily with addition of chemicals.

Nevertheless, redox can be considered for various combinations of the following:

- Natural gas or acid gas containing less than 20 t/d of sulfur.
- Sour natural gas for which CO_2 does not have to be removed.
- Acid gas with very low concentrations of H_2S.

Established redox processes include the following:

- Stretford licensed by British Gas, uses a vanadiam redox reagent.
- ARI-LO-CAT II licensed by Wheelabrator Clean Air Systems, SulFerox licensed by Dow, and Sulfint licensed by IFP. All employ iron redox reagents.

Oxygen Enrichment in Claus Plants

Oxygen enrichment refers to enrichment of the oxygen in a Claus furnace reaction. The objective is to increase the sulfur processing capacity of an existing Claus train (or trains), and thereby avoid having to build an additional train. The concept is to use oxygen-enriched air to a Claus reaction furnace instead of regular air as the carrier of the reactant, oxygen. This reduces the amount of inert nitrogen and therefore the process gas, and increases the acid-gas processing capacity. It also reduces the tail gas rate and therefore the incinerator fuel-gas requirements. If the concentration of H_2S in the acid gas is high, however, the design temperatures of an existing reaction furnace and waste-heat boiler can limit the degree of oxygen enrichment, and this has to be designed for. As well, any part of the plant that must handle an increased sulfur rate must be checked for adequacy. Reference 29 presents a comprehensive checklist for this purpose.

Oxygen enrichment is achieved by injecting oxygen into the regular air stream or into a burner of special design. The oxygen can be from pressurized-gas storage, an air-separation plant, a pressure-swing adsorption (PSA) process, or liquid storage with a vaporizer. Following is a list of commercial oxygen-enrichment processes and their licensors. The unique feature of each of these processes is the method of limiting the furnace operating temperature. The licensors should be contacted for details.

- COPE (Claus Oxygen-based Process Expansion) by Air Products
- OxyClause by Lurgi
- OxyMax by TPA
- SURE/DCP (Double Combustion Process) by Parsons/BOC

Emerging Processes

The following processes are in the development stage. For details, please refer to the references given.

- PROClaus (Parsons) — A Claus tail gas treatment process employs selective reduction followed by selective oxidation to achieve up to 99.5% overall sulfur recovery.[30]
- CrystaSulf (Radian International) — High-pressure sour gas containing H_2S in the range of 0.2 to 25 LTPD is contacted with a regenerable nonaqueous scrubbing liquid that absorbs the H_2S and converts it to sulfur, which is recovered by solvent cooling and crystalization, and is separated by slurry thickening and filtration. The overall sulfur recovery is 99.9+%.[31]
- CANSOLV (Cansolv Technologies Inc.) — A tail gas cleanup process oxidizes the sulfur compounds to SO_2, absorbs the SO_2 from the tail gas with an aqueous solvent, regenerates the solvent, and returns stripped SO_2 to the Claus reactor. The overall sulfur recovery is 99.9+%.[32]
- SUPER (Calabrian Corporation) — Pure SO_2 or oxygen enhanced SO_2 is injected into the acid-gas burner instead of air to eliminate nitrogen and reduce the gas handling capacity of a Claus plant.[33]

PROPERTIES OF SULFUR

Sulfur is a solid at ambient temperatures; it exists in two octatomic crystalline forms (rhombic and monoclinic) and an amorphous form. Up to about 204°F, rhombic crystals are the stable form; above this temperature and up to its melting point, monoclinic sulfur is the stable variety. Both crystalline forms consist basically of eight-membered rings, but the arrangement of the rings and the interatomic distances are different. Amorphous sulfur is prepared by rapidly chilling liquid sulfur which has been heated to near its boiling point. Amorphous sulfur, which slowly changes to the rhombic crystalline form at ambient temperatures, is also referred to as "rubber" sulfur and its presence is not desired. The approximate density of each solid sulfur form is as follows:

Rhombic	129 pounds/cubic foot
Monoclinic	122 pounds/cubic foot
Amorphous	120 pounds/cubic foot

The heat capacity of solid sulfur is shown in Fig. 22-14.

The melting points of solid sulfur range from 235°F for rhombic sulfur to 248°F for amorphous sulfur. Pure crystals of monoclinic sulfur melt at 239.4°F. When melted, sulfur becomes a brownish-yellow, transparent liquid (lambda sulfur),

FIG. 22-14

Heat Capacity of Solid Sulfur at Constant Pressure[4, 36]

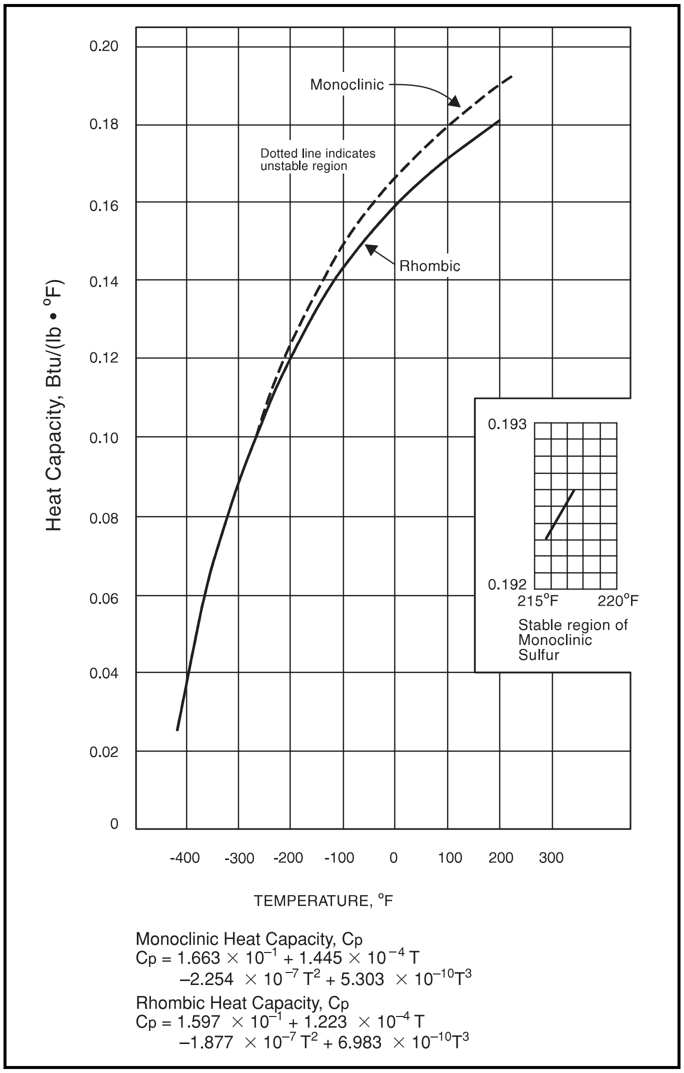

Monoclinic Heat Capacity, Cp

$Cp = 1.663 \times 10^{-1} + 1.445 \times 10^{-4}\,T - 2.254 \times 10^{-7}\,T^2 + 5.303 \times 10^{-10}T^3$

Rhombic Heat Capacity, Cp

$Cp = 1.597 \times 10^{-1} + 1.223 \times 10^{-4}\,T - 1.877 \times 10^{-7}\,T^2 + 6.983 \times 10^{-10}T^3$

whose molecular structure is also octatomic. As liquid sulfur is heated to about 320°F, the structure of the liquid undergoes an abrupt change; its color becomes a dark reddish brown and its viscosity increases significantly. Long chain polymers, (μ sulfur), exist in equilibrium with octatomic sulfur molecules. Fig. 22-15 shows how the viscosity of pure liquid sulfur changes with temperature and Fig. 22-16 shows how dissolved H_2S affects the viscosity of liquid sulfur. As the temperature is increased above 320°F, the color of liquid sulfur darkens and turns to a brownish-black above 482°F and remains dark up to the boiling point of 832°F. Fig. 22-17 and Fig. 22-18 show how the density and heat capacity, respectively, of liquid sulfur change with temperature. Fig. 22-19 shows the thermal conductivity of liquid sulfur.

Several sulfur molecules are present in the vapor phase, but the principal sulfur species are S_2, S_6, and S_8. Fig. 22-20 shows the distribution of sulfur species as a function of temperature. In sulfur plant vapors, the distribution of sulfur species is similar but not identical to that shown in Fig. 22-20 because of the presence of components other than sulfur. This sulfur species distribution was used to calculate (1) the equivalent vapor pressure of sulfur shown in Fig. 22-21 and (2) the latent heat of condensing sulfur vapors shown in Fig. 22-22. The S_1 equivalent vapor pressure and latent heat curves are convenient to use in process calculations although they may not be rigorous when components other than sulfur are present. The viscosity of sulfur vapors is shown in Fig. 22-23; the heat capacity of sulfur vapors is shown in Fig. 22-24.

SULFUR STORAGE AND HANDLING

Sulfur can be stored and handled as a liquid (at about 280°F) or as a solid (at ambient temperature). A Claus sulfur recovery plant will usually be provided with a rundown tank or pit (which may be either of steel or of acid-resistant concrete) sized for 3-5 days' production. If the sulfur is handled as a liquid, it can be pumped from the rundown tank either directly to tank truck or railroad tank car or to intermediate liquid sulfur storage. If the sulfur is handled as a solid, it is pumped to storage block (where the sulfur is allowed to cool and solidify) or to sulfur-forming facilities such as a flaker, a prilling tower, etc.

Serious environmental and/or safety problems can occur in the handling of liquid sulfur produced in Claus units. As shown in Fig. 22-25, the total solubility of H_2S in liquid sulfur increases with temperature because of the formation of hydrogen polysulfides (H_2S_x). Sulfur is produced in Claus units at temperatures of 280°F to 310°F but in storage, or during transportation, the temperature of the sulfur may drop as low as 260°F. Under these conditions, H_2S is emitted and accumulates in the vapor space above the liquid sulfur.

Concentrations of H_2S exceeding its lower explosive or flammability limit of 3.5 mol % (in air) have been measured in the vapor space of railroad tank cars. Emission of H_2S from liquid sulfur during solid sulfur forming operations can also present serious operating and/or environmental problems.

The H_2S/H_2S_x content of Claus sulfur is dependent on the partial pressure of H_2S in the process stream and the operating temperature. Typical measured concentrations (as H_2S) are as follows:

Reference	Ref. 17	Ref. 34
From thermal condenser	500-700	280-630
From first conv. condenser	180-280	90-220
From second conv. condenser	70-110	10-80
From tail-gas coalescer	5-10	NA

These H_2S concentrations are well above values that would be predicted from laboratory chemical-equilibrium and solubility data applied to corresponding temperatures and H_2S partial pressures at condenser outlets.[34] This is particularly true for the thermal condenser (i.e., 200-300%), and to a lesser extent for the first converter condenser. It is believed[35] that this is caused by a combination of two factors. One is sulfur condensation in the waste-heat boiler at temperatures higher than the condenser-outlet temperature, which increases the formation of H_2S_x and therefore the amount of dissolved H_2S. This is feasible because temperatures inside the flow-boundary layers of the waste-heat boiler tubes can be below the sulfur dewpoint temperature. The second factor is a combination of chemical equilibrium, reaction kinetics, and transport phenomena in the condenser tubes, which results in residual H_2S and H_2S_x higher than predicted at the condenser outlet. Thus it is not feasible to predict the amount of residual H_2S and H_2S_x in the sulfur product.

FIG. 22-15

Viscosity of Liquid Sulfur[12, 36]

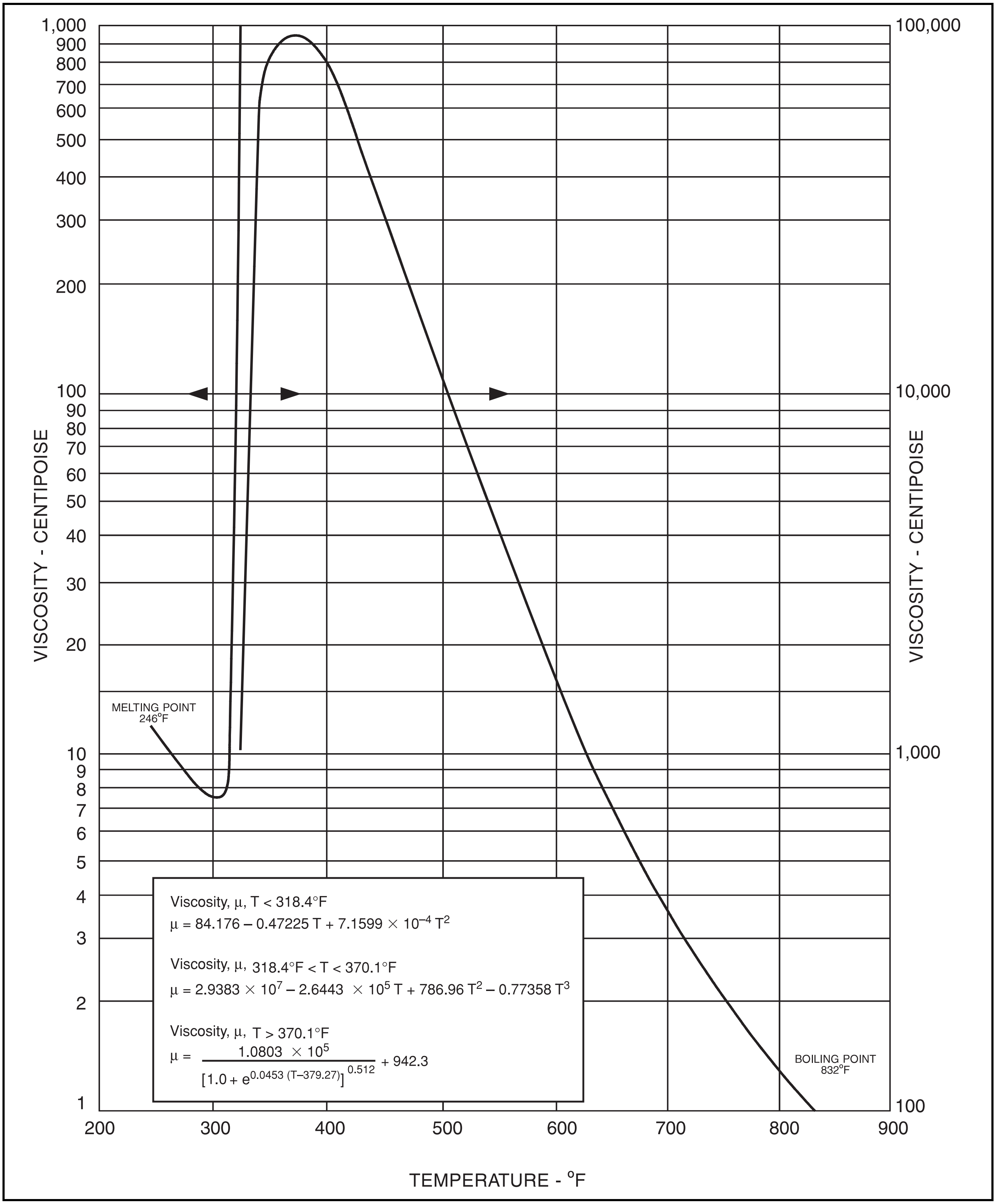

Viscosity, μ, T < 318.4°F

$\mu = 84.176 - 0.47225\,T + 7.1599 \times 10^{-4}\,T^2$

Viscosity, μ, 318.4°F < T < 370.1°F

$\mu = 2.9383 \times 10^7 - 2.6443 \times 10^5\,T + 786.96\,T^2 - 0.77358\,T^3$

Viscosity, μ, T > 370.1°F

$$\mu = \frac{1.0803 \times 10^5}{[1.0 + e^{0.0453\,(T-379.27)}]^{0.512}} + 942.3$$

FIG. 22-16

Effects of Hydrogen Sulfide on the Viscosity of Molten Sulfur[12, 18]

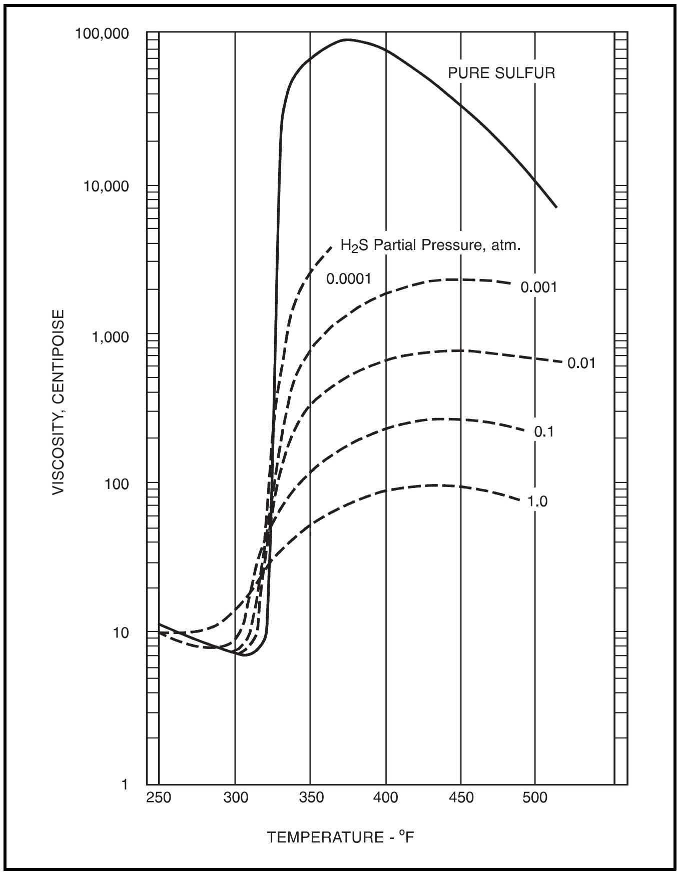

Degasification facilities handling Claus sulfur are normally designed on the basis of an average value of 250 to 300 ppmw total H_2S.

Tests using railroad tank cars with liquid sulfur containing 7 ppmw, 15 ppmw, and 100 ppmw of total H_2S indicated that 15 ppmw H_2S is the upper limit for safe handling of liquid sulfur and, therefore, degasification facilities should be designed for a maximum of 10 ppmw H_2S.[17, 24] Commercial degasification processes are available from BP Amoco, Elf Aquitaine, Exxon Mobil, Enersul, Shell, and Goar Allison and Associates.

CLAUS PLANT STARTUP AND SHUTDOWN PROCEDURES

Initial Startup

For the initial startup, three important procedures must be followed before putting a Claus sulfur recovery plant in service. These are:

- Curing of all refractory (in combustion chamber, piping, inline burners, incinerator, stack, etc.)
- Cleaning of the waste heat boiler and other steam-producing equipment
- Heating of the catalyst beds and all other equipment to proper operating temperatures

FIG. 22-17

Density of Liquid Sulfur[26, 36]

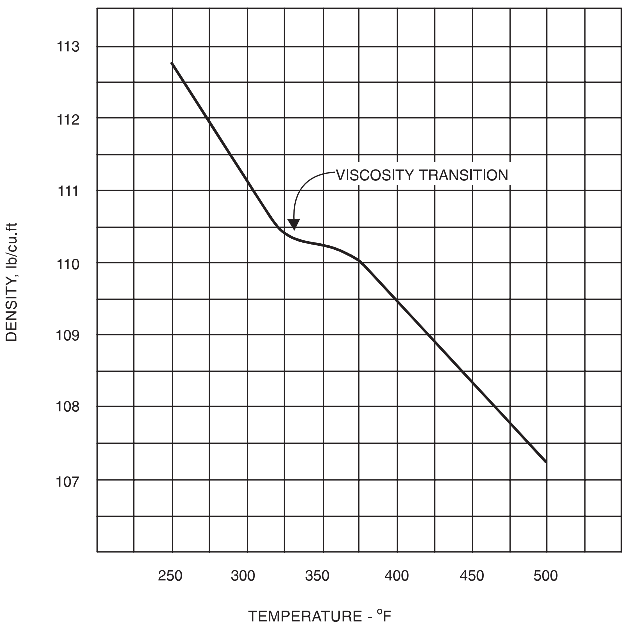

Density, ρ, T < 299.9°F

$\rho = 119.92 - 0.02943\ T$

Density, ρ, 299.9°F < T < 371.9°F

$\rho = 208.56 - 0.8329\ T + 0.0023842\ T^2 - 2.3021 \times 10^{-6}\ T^3$

Density, ρ, T > 371.9°F

$\rho = 118.14 - 0.02152\ T$

Curing of the refractory, which involves carefully controlled heating, is necessary because, if wet refractory is heated too quickly, the contained water will vaporize too rapidly, damaging the refractory. The manufacturer of the refractory (or refractories) should be consulted regarding suitable curing procedures.

Cleaning of the waste heat boiler and other steam-producing equipment is necessary to remove oil and grease. The equipment can be boiled out with water plus boil-out chemicals (such as sodium hydroxide and sodium carbonate) or it can be cleaned chemically. If a chemical cleaning procedure is chosen, any steam produced during the refractory curing can be fed to the plant steam headers; if a boil-out procedure is followed, any steam produced should be vented to atmosphere. Under either procedure, the steam-producing equipment should be filled with water to prevent tube damage before refractory curing and/or boiling-out are commenced and either the pilot burners or the main gas burners are lit.

Heating the catalytic converters and all other equipment to near normal operating temperatures by burning fuel gas is necessary to prevent condensation of liquid sulfur on the catalyst beds when acid gas is fed to the unit. The pilot burners are lit first and after about 30 minutes, the main burners are used to gradually raise the temperatures of the refractory and all the equipment. Each catalytic converter should be heated until the outlet temperature is about 400°F. Usually the Claus plant is ready for startup when the catalytic converters are

FIG. 22-18

Heat Capacity of Liquid Sulfur[5, 36]

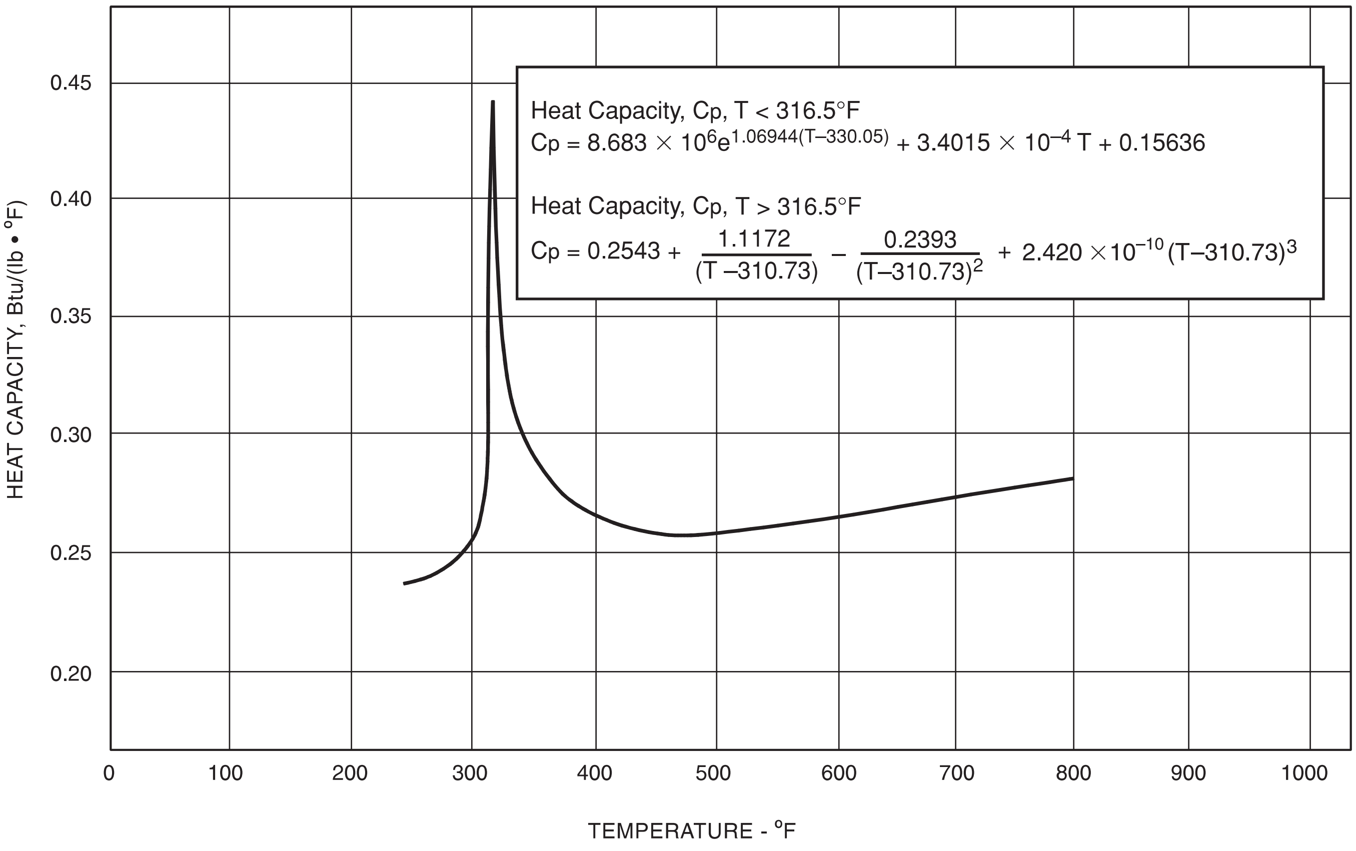

hot. Acid gas is then fed to the plant while continuing to burn fuel gas. When combustion of the acid gas is assured, the fuel gas rate is gradually reduced to zero. The air rate is then adjusted to give optimum sulfur recovery.

Subsequent Startups

Claus plant startups after the plant has been in operation are either hot startups or cold startups. A hot startup is when the catalyst bed temperatures have not dropped below about 400°F and other temperatures in the unit have not dropped below about 300°F; a cold startup is when the unit temperatures have dropped below these values.

A hot startup does not require that the plant be heated with fuel gas. The fuel gas pilots are lit and acid gas is fed to the plant. When stable acid gas combustion has been established, the pilots are turned off and the air rate adjusted for optimum sulfur recovery. Excess air should not be used.

A cold startup requires that the plant be heated with fuel gas as in the initial startup procedure with two exceptions. The refractory need not be cured (unless refractory repairs have been made) nor the steam-producing equipment boiled out. Second, excess air should normally not be used during the heating procedure, unless the unit has been completely purged of all sulfur and sulfur compounds as part of a planned shutdown.

Shutdowns

The procedures to be followed during a planned shutdown of a Claus sulfur recovery unit are an important part of plant operations.

If the plant is being shutdown for only a few hours (for example, for reasons unrelated to the sulfur plant operation) the procedure may only involve

- Raising the catalyst bed temperatures by 30-40°F, in order to provide added assurance that sulfur condensation will not occur during the shutdown period
- Shutting off the air and acid gas
- Blocking in (isolating) the plant to prevent the entrance of air.

If a longer shutdown period is planned, the air rate is reduced (after the catalyst bed temperatures have been raised) to give an H_2S/SO_2 ratio at the front end of 2.5/1 to 3/1 and the plant is operated in this manner for several hours to rejuvenate the catalyst beds. Fuel gas is then added to the burner and as soon as the fuel gas flame is established, the acid gas is gradually shut off. The air rate is then adjusted to provide (as close as possible) the stoichiometric requirement for combustion of the fuel gas. Insufficient air, which can result in carbon formation and fouling of the unit, should be avoided; excess air is more acceptable but because sulfur fires within

FIG. 22-19

Thermal Conductivity of Liquid Sulfur[36]

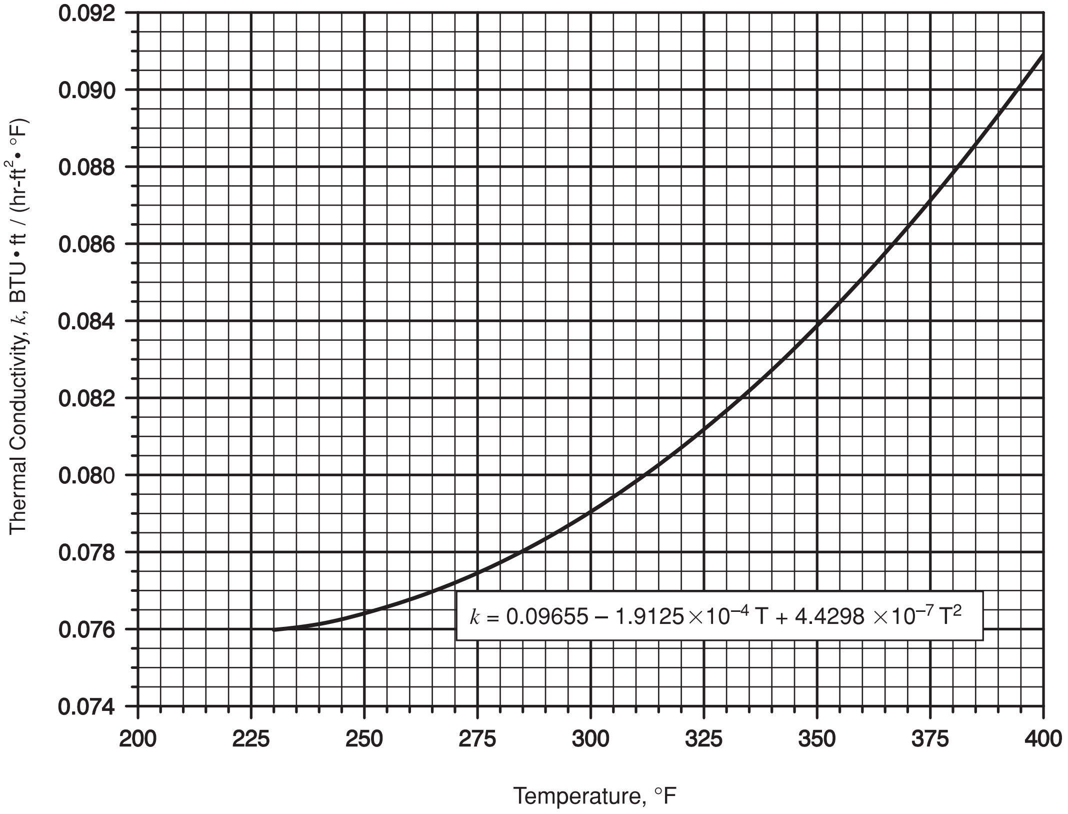

the unit are possible even with a small amount of excess air, temperatures should be closely monitored and the combustion products should be analyzed regularly. Control of the combustion temperature (to prevent damaging the refractory) is obtained by injecting an inert gas (usually steam, although nitrogen and carbon dioxide can be used). This purging of the plant by combustion of fuel gas should be continued at least until sulfur stops draining from the unit. If it is planned to enter the unit for maintenance or other work, the fuel gas is then shut off, but the flow of air is continued until the unit is sufficiently cooled and thoroughly purged of hazardous materials; if entry to the unit is not scheduled, both air and fuel gas are shut off, and the unit is blocked in.

Emergency shutdowns can cause serious problems if proper precautions are not taken. If the plant cannot be placed in operation soon after an emergency shutdown, an inert gas should be fed to purge the plant. Otherwise, sulfur in the unit may solidify and damage the plant, or require replacement of the catalyst beds, and manual cleaning of the waste heat boiler and sulfur condenser tubes.

CLAUS PROCESS CALCULATION

Process calculations for a Claus sulfur recovery unit are complicated by the existence of various species of gaseous sulfur (S_2, S_3, S_4, S_5, S_6, S_7, and S_8) whose equilibrium concentrations in relation to each other are often not precisely known, and by the number of side reactions involving other feed gas components such as CO_2, hydrocarbons, ammonia, etc., which take place simultaneously. These calculations are usually carried out by computer with equilibrium conditions and compositions. A data base which is often utilized for these Claus plant calculations is the JANAF (Joint Army Navy Air Force) tables.[8]

Reasonably accurate process calculations can be carried out manually, however, if side reactions are ignored. The following example illustrates a simplified method of calculating the significant process parameters for a 100 LT/D (feed) Claus plant.

Example 22-1 —

Feed Gas @ 110°F & 20.7 psia	mol %	mols/hr
H_2S	60.65	291.06
CO_2	32.17	154.39
H_2O	6.20	29.75
Hydrocarbons (as C_1)	0.98	4.71
	100.00	479.91

Ambient Conditions	
Dry Bulb Temperature	100°F
Wet Bulb Temperature	75°F
Air Blower Discharge Temperature	180°F

Step 1 Combustion/Reaction Section

Calculate air required to burn ⅓ of the H_2S in the feed and for total combustion of hydrocarbons

$$H_2S + 1\tfrac{1}{2}O_2 \rightarrow H_2O + SO_2 \qquad \text{From Eq 22-2}$$

$$\Delta H \text{ @ } 77°F = -223\,100 \text{ Btu}$$

$$CH_4 + 2O_2 \rightarrow CO_2 + 2\,H_2O \qquad \textbf{Eq 22-9}$$

$$\Delta H \text{ @ } 77°F = -345\,170 \text{ Btu}$$

FIG. 22-20

Distribution of Sulfur Vapor Species[2]

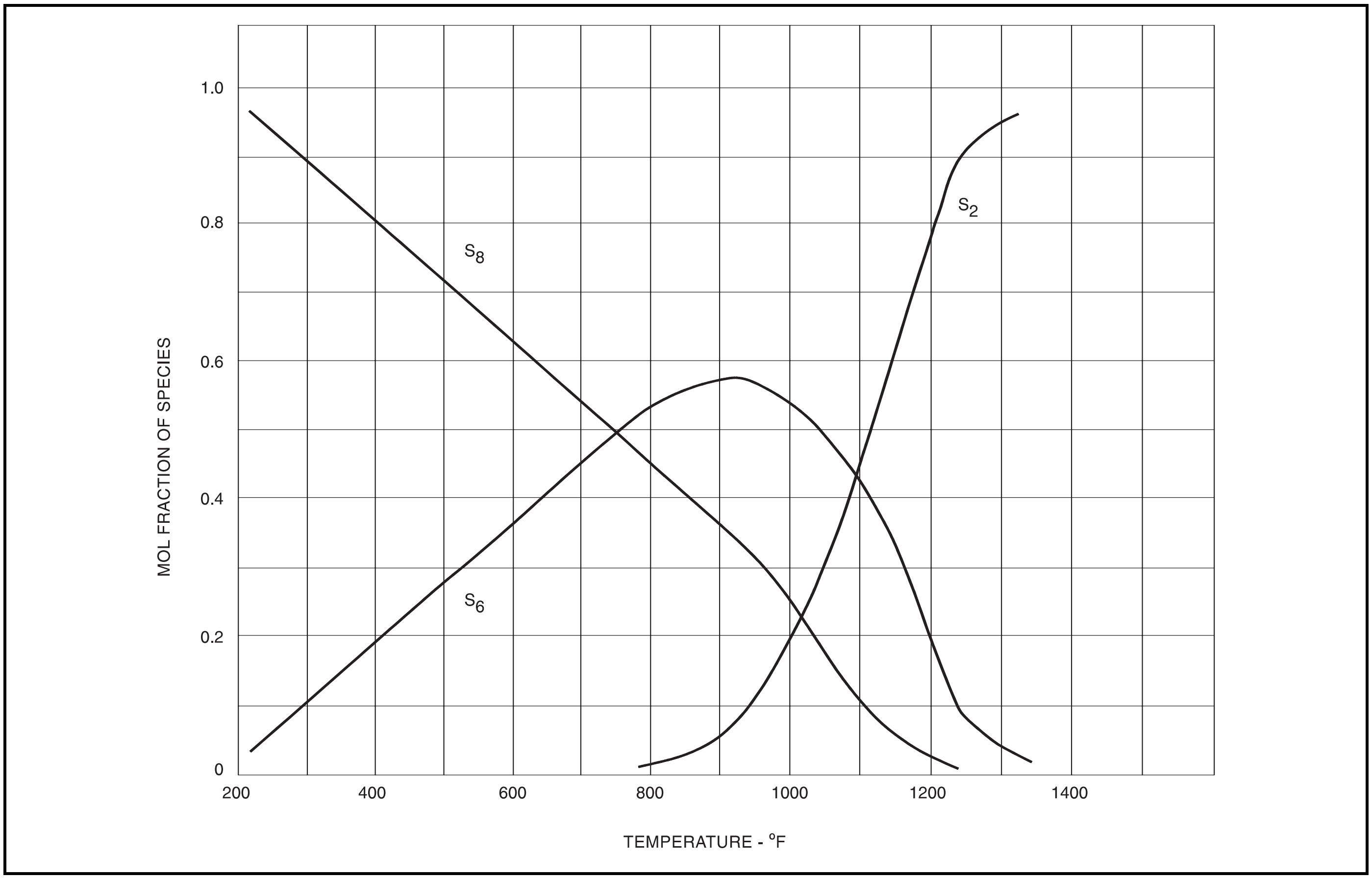

Find oxygen required:

$H_2S \rightarrow SO_2$ (1/3) (3/2) (291.06) = 145.53 mols / hr O_2

Hydrocarbons (as C_1) 2 (4.71) = 9.42 mols / hr O_2

Total = 154.95 mols/ hr O_2

Assume x = mols of H_2S reacting

$$\begin{array}{cccc} 2\,H_2S + & SO_2 \rightarrow & 2\,H_2O + & \tfrac{3}{2}\,S_2 \\ x & \tfrac{1}{2}\,x & x & \tfrac{3}{4}\,x \end{array}$$

From Eq 22-6

ΔH @ 77°F = +20 400 Btu

Material Balance (Combustion/Reaction Section)

	Feed Gas Mols/hr	Air Mols/hr
H_2S	291.06	—
CO_2	154.39	—
H_2O	29.75	21.91
SO_2	—	—
N_2	—	582.65
O_2	—	154.95
S_2	—	—
S_6	—	—
S_8	—	—
Hydrocarbons (as C_1)	4.71	—
	479.91	759.51

	Combustion Products Mols/hr	Reaction Products Mols/hr
H_2S	194.04	194.04 – x
CO_2	159.10	159.10
H_2O	158.10	158.10 + x
SO_2	97.02	97.02 – ½x
N_2	582.65	582.65
S_2	—	¾x
S_6	—	—
S_8	—	—
Hydrocarbons (as C_1)	—	—
	1190.91	1190.91 + ¼x

Assume ΔP through the burner and furnace is 1.6 psi. Then P = 19.1 psia or 1.3 atmospheres

At equilibrium,

$$K_p = \frac{[H_2O]^2\,[S_2]^{3/2}}{[H_2S]^2\,[SO_2]}\left[\frac{\pi}{\text{total mols}}\right]^{\frac{3}{2}-1}$$

$$= \frac{[158.10 + x]^2\,[\tfrac{3}{4}\,x]^{3/2}}{[194.04 - x]^2\,[97.02 - \tfrac{1}{2}x]}\left[\frac{[1.3]}{[1190.91 + \tfrac{1}{4}x]}\right]^{1/2}$$

FIG. 22-21

Vapor Pressure of Sulfur[9, 20, 36]

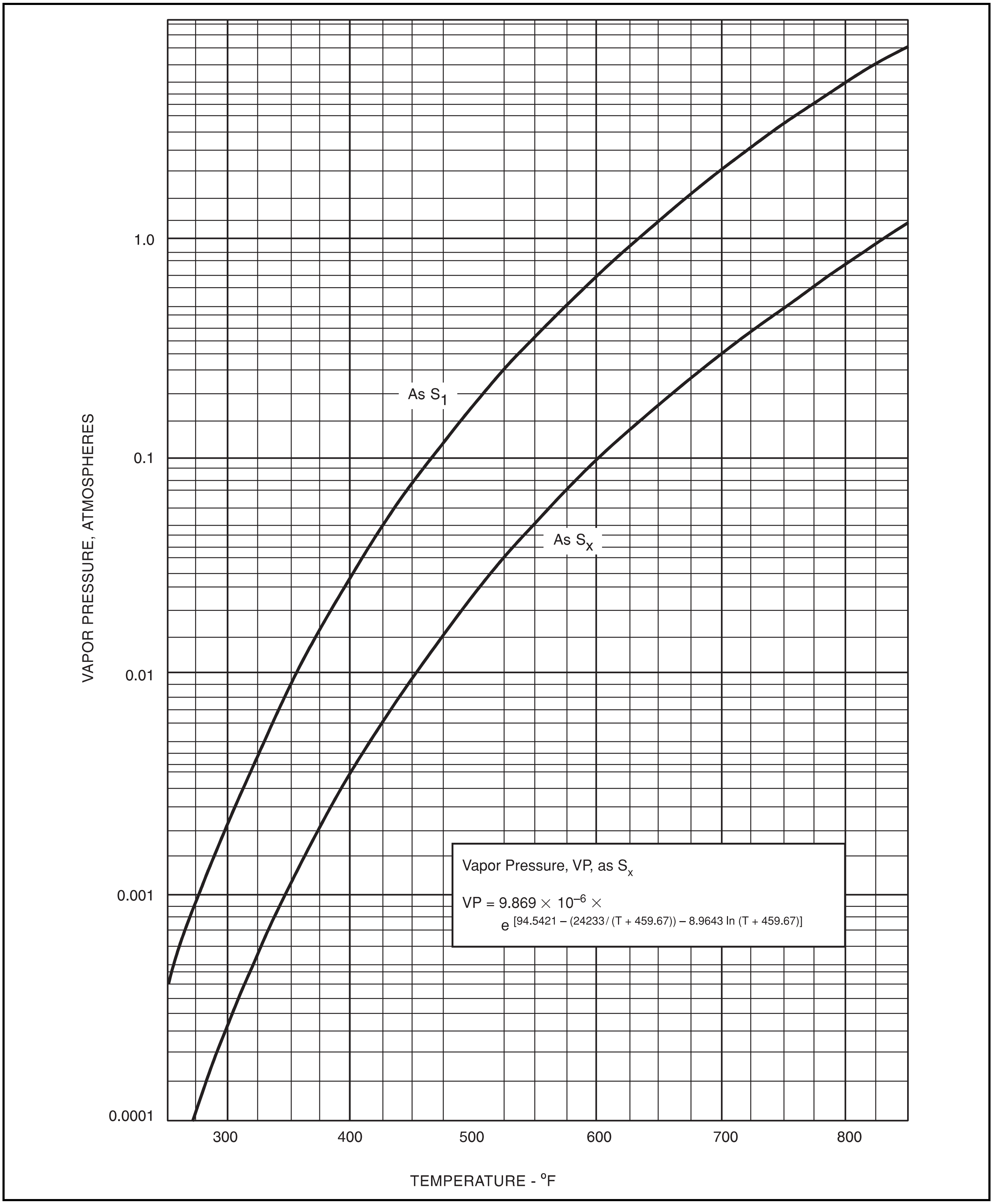

FIG. 22-22

Heat of Vaporization of Sulfur

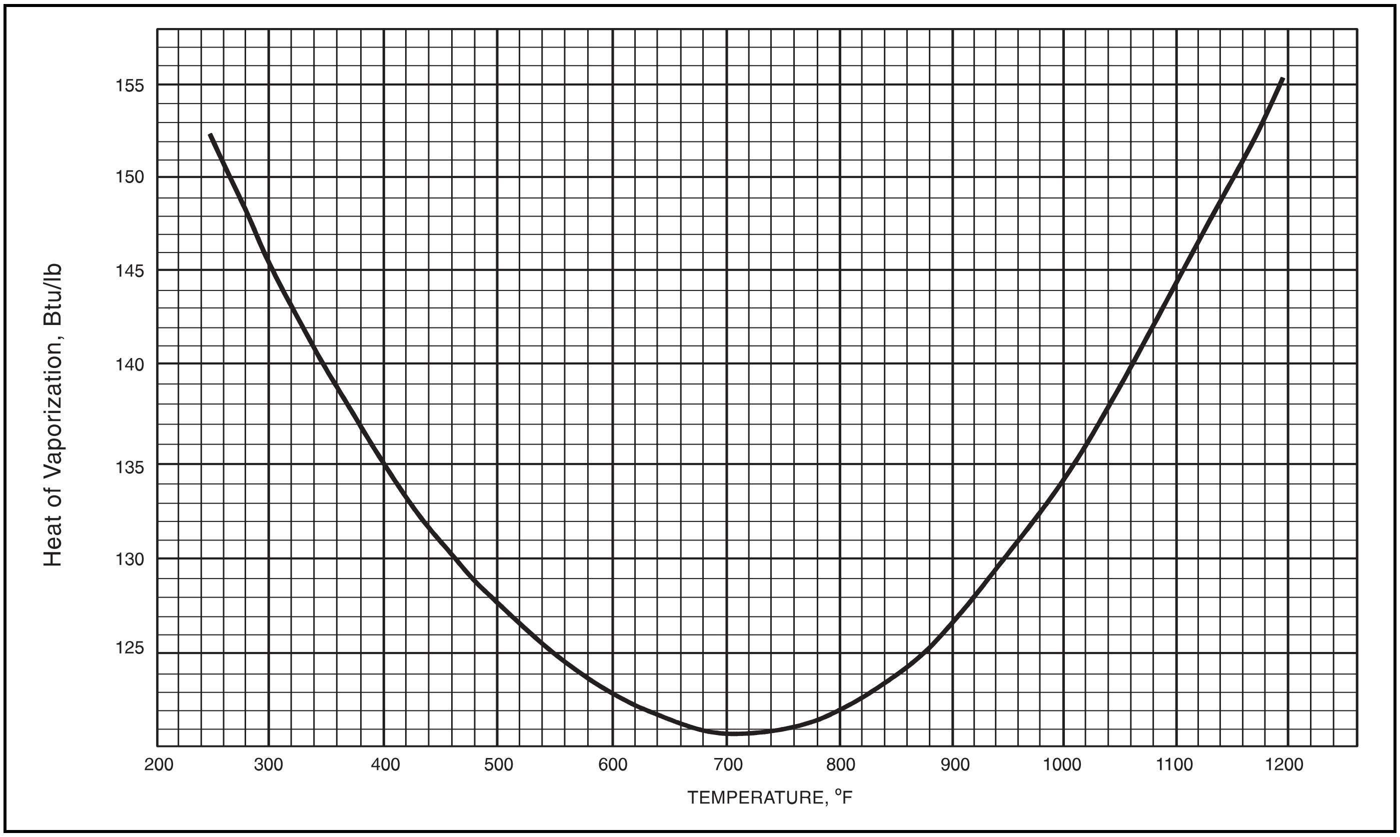

FIG. 22-23

Viscosity of Sulfur Vapor[12, 36]

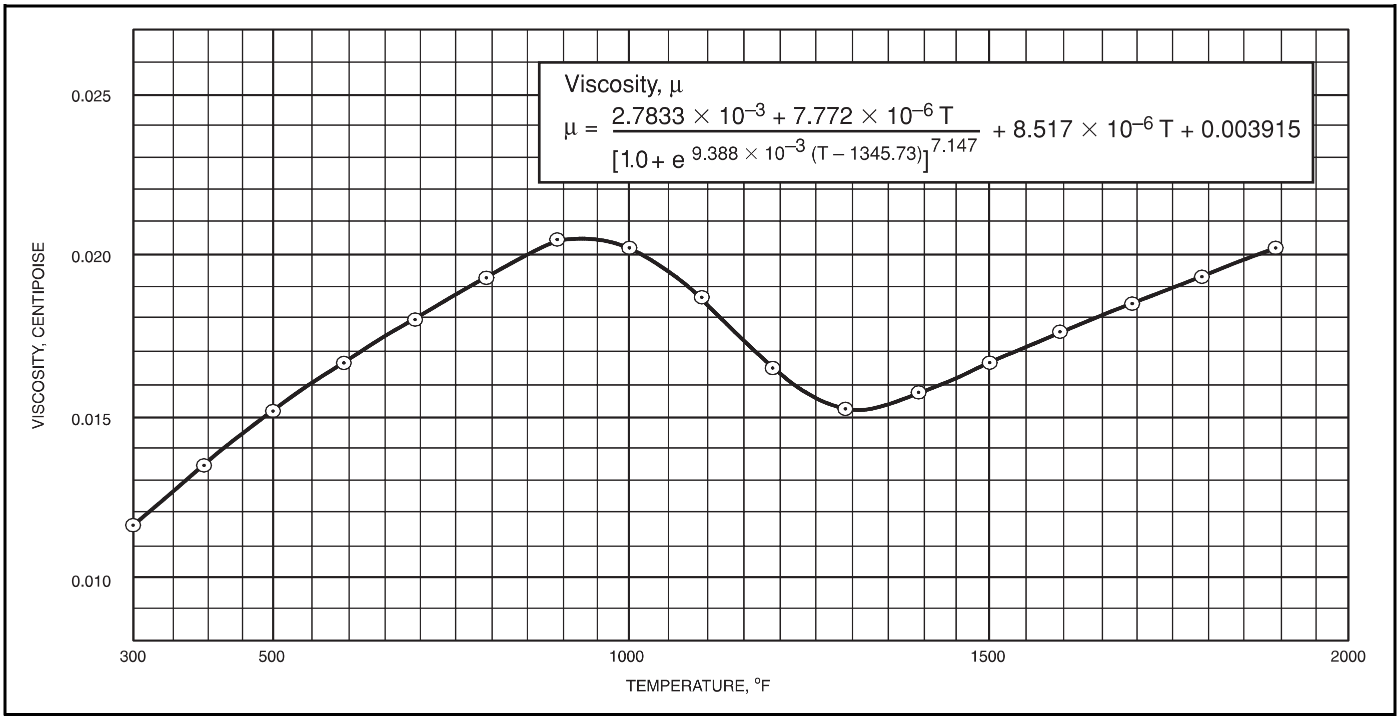

Viscosity, μ

$$\mu = \frac{2.7833 \times 10^{-3} + 7.772 \times 10^{-6}\, T}{\left[1.0 + e^{9.388 \times 10^{-3}(T - 1345.73)}\right]^{7.147}} + 8.517 \times 10^{-6}\, T + 0.003915$$

FIG. 22-24

Heat Capacity of Equilibrium Sulfur Vapors[7, 10, 16, 36]

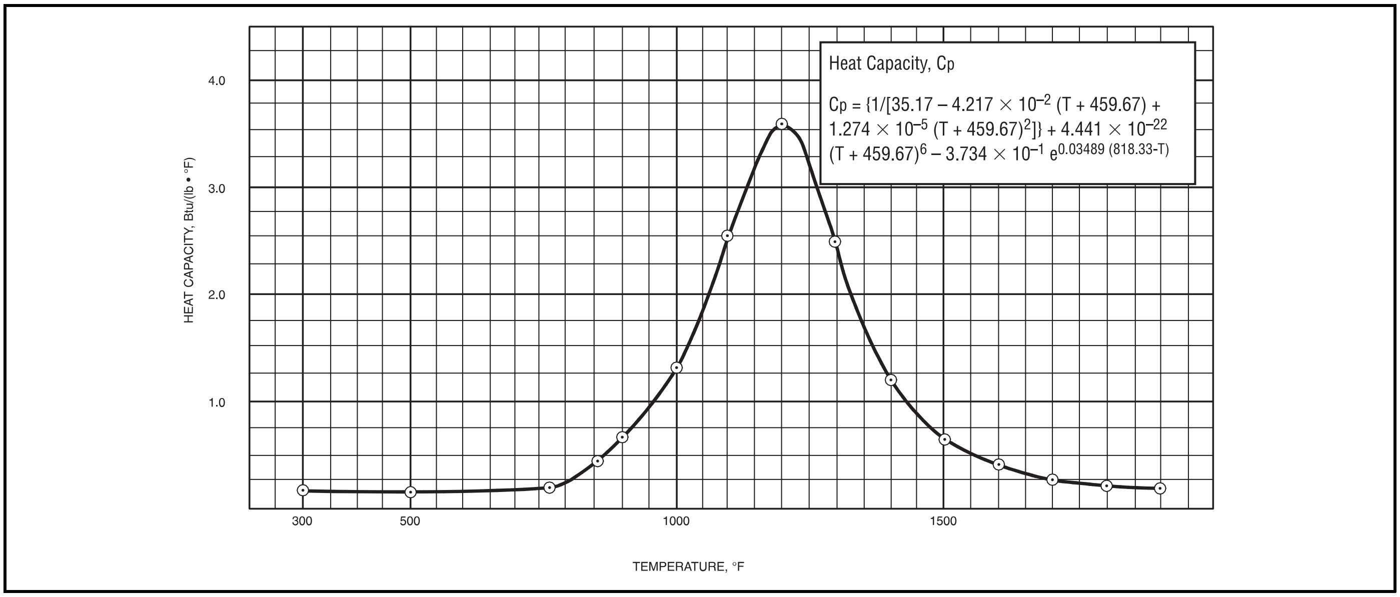

x, mols/hr (assumed)	K_p (calculated)	Equilibrium Temperature (from Fig. 22-26)
130	19.8	1880°F
135	27.7	2090°F
140	39.5	2390°F

Determine flame temperature by heat balance for each value of x using the thermodynamic data in Fig. 22-27. For example, at x = 130 mols/hr

	mols/hr	Feed Gas H @ 110°F Btu/lb-mol	Feed Gas H @ 110°F Btu/hr
H_2S	291.06	633.9	184 500
CO_2	154.39	690.8	106 650
H_2O	29.75	626.1	18 630
Hydrocarbons (as C_1)	4.71	666.1	3 140
	479.91		312 920

	mols/hr	Combustion Air H @ 180°F Btu/lb-mol	Combustion Air H @ 180°F Btu/hr
O_2	154.95	1043.3	161 660
N_2	582.65	1030.7	600 540
H_2O	21.91	1191.5	26 110
	759.51		788 310

	mols/hr	Reaction Products H @ 2100°F Btu/lb-mol	Reaction Products H @ 2100°F Btu/hr
H_2S	64.04	21 020	1 346 120
CO_2	159.10	25 010	3 979 090
H_2O	288.10	19 470	5 609 310
SO_2	32.02	25 190	806 580
N_2	582.65	15 670	9 130 130
S_2	97.50	17 840	1 739 400
	1223.41		22 610 630

	Reaction Products H @ 2200°F Btu/lb-mol	Reaction Products H @ 2200°F Btu/hr
H_2S	22 220	1 422 970
CO_2	26 400	4 200 240
H_2O	20 570	5 926 220
SO_2	26 520	849 170
N_2	16 490	9 607 900
S_2	18 730	1 826 180
		23 832 680

Heat in, Btu/hr:

Feed Gas		=	312 920
Combustion Air		=	788 310
H_2S Combustion	(97.02 mols/hr) (223 100)	=	21 645 160
HC Combustion	(4.71 mols/hr) (345 170)	=	1 625 750
Claus Reaction	(130/2 mols/hr) (–20 400)	=	–1 326 000
			23 046 140

By interpolation, flame temperature is approximately 2135°F.

Similarly for x = 135 mols/hr, the calculated flame temperature is 2131°F, and for x = 140 mols/hr, 2127°F. Plotting the assumed values of x versus calculated equilibrium temperature and flame temperatures (Fig. 22-28) gives a value of x = 136 mols/hr (equivalent to 70.1% conversion) and a temperature of 2130°F which meet both thermodynamic equilibrium and heat balance conditions.

Step 2 Waste Heat Boiler Duty

Assume that 250 psig steam is generated in the waste heat boiler and therefore that the temperature of the cooled combustion products is 700°F. From Fig. 22-20, the distribution of sulfur vapor species at 700°F is approximately 0.5 mol % S_2, 45 mol % S_6, and 54.5 mol % S_8. The cooled combustion product composition and waste heat boiler heat balance are therefore as follows:

FIG. 22-25

H_2S and H_2S_x to Total H_2S Solubility (at 1 bar H_2S vapor pressure)

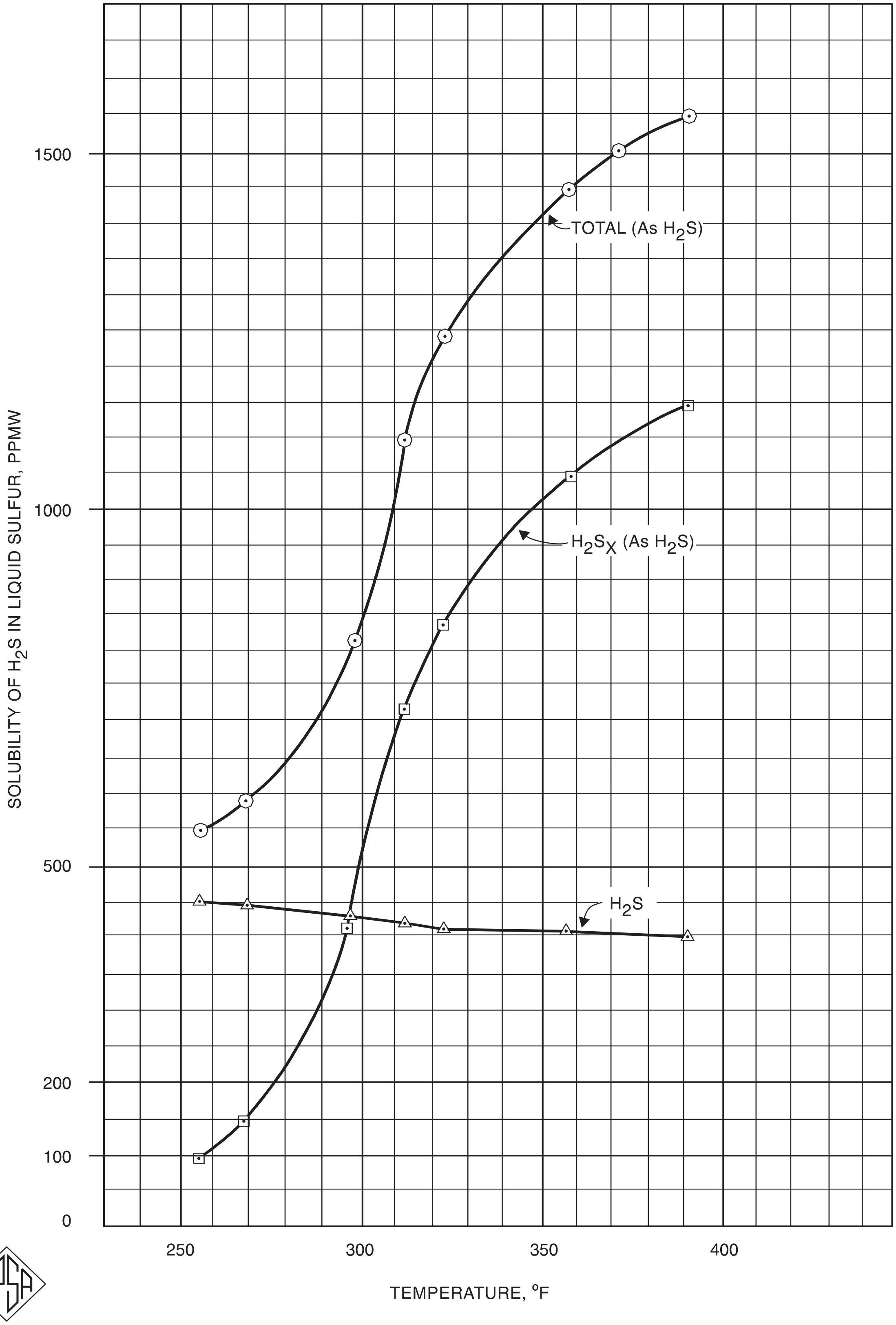

		Reaction Products H @ 2130°F	
	mols/hr	Btu/lb-mol	Btu/hr
H_2S	58.04	21 380	1 240 900
CO_2	159.10	25 427	4 045 440
H_2O	294.10	19 800	5 823 180
SO_2	29.02	25 589	742 590
N_2	582.65	15 916	9 273 460
S_2	102.00	18 107	1 846 910
S_6	—	—	—
S_8	—	—	—
	1224.91		22 972 480

		Cooled Reaction Products H @ 700°F	
	mols/hr	Btu/lb-mol	Btu/hr
H_2S	58.04	5 796	336 400
CO_2	159.10	6 855	1 090 630
H_2O	294.10	5 572	1 638 730
SO_2	29.02	7 181	208 390
N_2	582.65	4 713	2 746 030
S_2	0.14	5 498	770
S_6	12.98	14 005	181 780
S_8	15.73	18 228	286 730
	1151.76		6 489 460

ΔH: 22 972 480 – 6 489 460 = 16 483 020 Btu/hr

From Fig. 22-29

S_2 (vapor) → S_6 (vapor) (12.98) (120 000) = 1 557 600 Btu/hr

From Fig. 22-29

S_2 (vapor) → S_8 (vapor) (15.73) (178 316) = 2 804 910 Btu/hr

Total heat duty

16 483 020 + 1 557 600 + 2 804 910 = 20 845 530 Btu/hr

Note: Partial pressure of sulfur vapor

$$= \frac{S_2 + S_6 + S_8}{\text{Total Mols}} (\text{Total Pressure})$$

$$= \frac{0.14 + 12.98 + 15.73}{1151.76} (1.3) = 0.033 \text{ atmospheres}$$

From Fig. 22-21, the vapor pressure of sulfur at 700°F is approximately 0.3 atmosphere, so no sulfur is condensed.

Step 3 1st Sulfur Condenser

Assume a pressure drop through the condenser of 0.5 psi, with the process stream further cooled to 350°F. From Fig. 22-21, the vapor pressure of sulfur at 350°F is 0.0011 atmospheres so the stream is below the sulfur dewpoint. From Fig. 22-20, the distribution of sulfur species is 14.5 mol % S_6 and 85.5 mol % S_8. If no condensation took place, there would be 3.84 mols/hr of S_6 and 22.62 mols/hr of S_8. [Note: (6)(3.84) + (8)(22.62) ≅ (2)(102.0)]

Uncondensed sulfur

$$= \left[\frac{(0.0011)(14.7)}{18.6 - (0.0011)(14.7)}\right][1151.76 - (3.84 + 22.62)]$$

$$= 0.98 \text{ mols/hr}$$

S_6: 0.145 (0.98) = 0.14 mols/hr uncondensed
3.84 – 0.14 = 3.70 mols/hr condensed
S_8: 0.853 (0.98) = 0.84 mols/hr uncondensed
22.62 – 0.84 = 21.78 mols/hr condensed

		Condenser Outlet Conditions H @ 350°F	
	mols/hr	Btu/lb-mol	Btu/hr
H_2S	58.04	2646.5	153 600
CO_2	159.10	3023	480 960
H_2O	294.10	2586	760 540
SO_2	29.02	3205	93 010
N_2	582.65	2219	1 292 900
S_2 (vapor)	—	—	—
S_6 (vapor)	3.84	6506	24 980
S_8 (vapor)	22.62	8463	191 430
	1149.37		2 997 420

DH: 6 489 460 – 2 997 420 = 3 492 040 Btu/hr

Fig. 22-30 DH:

S_6 (vapor) → S_{liq} (3.70) (39 690) = 146 850 Btu/hr

Fig. 22-30 DH:

S_8 (vapor) → S_{liq} (21.78) (34 830) = 758 600 Btu/hr

Fig. 22-29 DH:

S_2 (vapor) → S_6 (vapor) (0.005) (118 600) = 590 Btu / hr

Fig. 22-29 DH:

S_2 (vapor) → S_8 (vapor) (0.031) (176 216) = 5460 Btu/ hr

Total Duty

3 492 040 + 146 850 + 758 600 + 590 + 5460
= 4 403 540 Btu/hr

Step 4 1st Reheater

One of the principal purposes of reheating is to maintain the process gas above the sulfur dewpoint throughout the catalyst bed. To estimate the dewpoint temperature at the bed outlet, assume that 20% of the H_2S in the feed will be converted to sulfur in the first catalyst bed. Total sulfur (as S_1) at the bed outlet will then be

0.14 (6) + 0.84 (8) + 0.20 (291.06) = 65.77 mols/hr vapor as S_1 assuming a pressure drop for the reheater and catalyst bed of 1.0 psi,

Sulfur vapor pressure (as S_1) then is:

$$\frac{65.77}{1129.35}(17.6) = 1.03 \text{ psi or } 0.07 \text{ atmospheres}$$

From Fig. 22-21, the vapor pressure of sulfur at 445°F is about 0.070 atm. The preheater outlet temperature is therefore set 30°F higher or 475°F.

FIG. 22-26

Equilibrium Constant for Claus Reaction

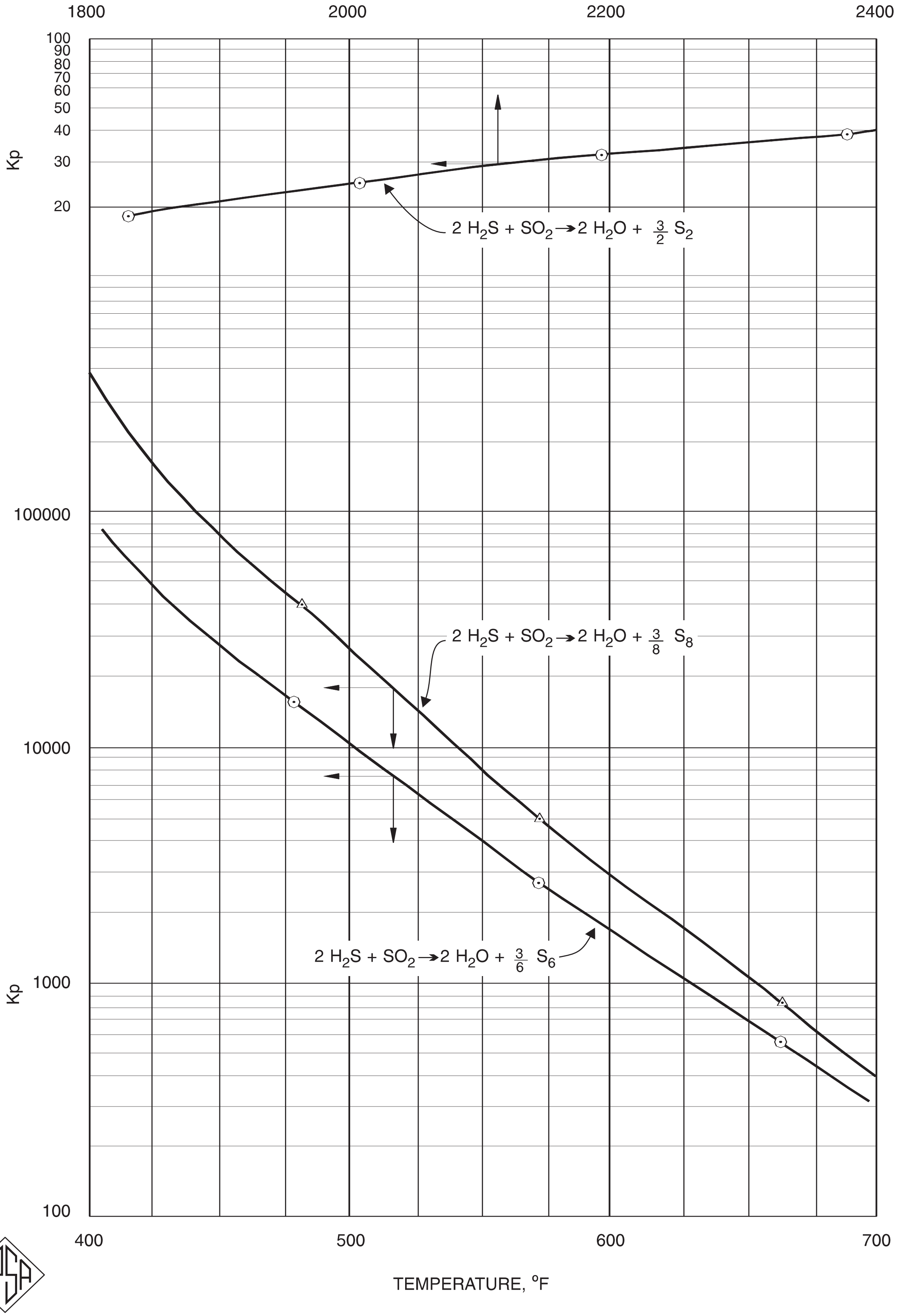

FIG. 22-27

Enthalpies of Paraffin Hydrocarbons, Combustion Products and Sulfur Compounds[11]

Enthalpies of Paraffin Hydrocarbons, C_1-C_6 Btu/lb-mole

°F	C_1	C_2	C_3	nC_4	iC_4	nC_5	nC_6
32	0.0	0.0	0.0	0.0	0.0	0.0	0.0
60	234.3	338.2	467.8	633.4	614.2	787.6	943.6
77	378.6	549.8	762.3	1030	1001	1280	1533
100	576.3	843.7	1174	1582	1544	1966	2353
200	1474	2225	3114	4184	4086	5201	6227
300	2430	3775	5340	7128	7032	8851	10579
400	3470	5492	7827	10395	10315	12890	15396
500	4590	7366	10539	13070	13910	17310	20653
600	5790	9401	13470	17830	17780	22060	26323
700	7065	11584	16620	21940	21910	27130	32353
800	8416	13900	19940	26290	26270	32490	38720
900	9827	16330	23450	30850	30860	38100	45400
1000	11330	18880	27110	35600	35640	43950	52350
1100	12880	21540	30920	40540	40610	50020	59540
1200	14490	24290	34870	45640	45750	56310	66990
1300	16170	27130	38940	50900	51030	62780	74670
1400	17890	30050	43110	56310	56470	69430	82570
1500	19660	33090	47430	61890	62050	76280	90670
1600	21470	36190	51840	67590	67800	83280	98930
1700	23350	39340	56340	73400	73670	90350	107390
1800	25260	42560	60930	79330	79600	97640	116000
1900	27210	45870	65560	85370	85590	105000	124760
2000	29190	49210	70320	91470	91690	112480	133650
2100	31210	52600	75080	97630	97910	120200	142680
2200	33210	56060	79970	103910	104190	127800	151750
2400	37420						
2800	46050						
3000	50480						
3500	61870						
4000	73440						

Enthalpies of Sulfur Compounds Btu/lb-mole

°F	S_2	SO_2	SO_3	H_2S	CS_2	COS	S_6	S_8
32	0.0	0.0	0.0	0.0	0.0	0.0	0.0	0.0
60	215.2	262.6	330	226	300.4	217.7	560.5	728.7
77	346.3	423.9	530	363.8	484.4	440.6	902	1173
100	526	644.6	825	551.6	738.6	675.2	1365	1775
200	1318	1633	2115	1375	1873	1711	3398	4419
300	2129	2667	3500	2216	3054	2799	5460	7102
400	2955	3743	4995	3077	4275	3933	7552	9824
500	3793	4858	6560	3960	5530	5091	9674	12586
600	4642	6004	8200	4866	6814	6293	11825	15383
700	5498	7181	9915	5796	8121	7531	14005	18228
800	6359	8386	11680	6751	9449	8784	16216	21109
900	7227	9609	13480	7730	10790	10060	18455	24029
1000	8099	10840	15330	8732	12150	11350	20725	26988
1100	8974	12100	17210	9757	13530	12660	23024	29987
1200	9851	13370	19140	10800	14910	13990	25353	33025
1300	10730	14660	21090	11870	16310	15230	27711	36103
1400	11610	15950	23070	12960	17710	16680	30099	39221
1500	12500	17250	25070	14060	19120	18040	32516	42377
1600	13390	18550	27100	15180	20540	19410		
1700	14270	19860	29140	16320	21960	20790		
1800	15160	21180	31220	17470	23390	22180		
1900	16050	22510		18640	24830	23560		
2000	16940	23850		19820	26270	24980		
2100	17840	25190		21020	27710	26380		
2200	18730	26520		22220	29150	27800		
2500	21410	30550		25890	33510	32060		
3000	25900	37340						
3500	30400	44180						
4000	34920	51030						
4500	39440	57910						
5000	43980	64780						

Note: Values are based upon datum of 0.0 Btu/lb-mole @ 32°F

Enthalpies of Combustion Gases Btu/lb-mole

°F	N_2	O_2	Air	H_2	CO	CO_2	H_2O
32	0.0	0.0	0.0	0.0	0.0	0.0	0.0
60	194.9	195.9	194.6	191.9	194.9	243.1	224.2
77	312.2	315.1	312.7	308.9	313.3	392.2	360.5
100	473.3	476.7	472.7	467.6	473.5	597.9	545.3
200	1170	1185	1170	1160	1171	1527	1353
300	1868	1903	1870	1861	1872	2509	2171
400	2570	2634	2576	2560	2578	3537	3001
500	3277	3379	3289	3258	3292	4607	3842
600	3991	4137	4010	3940	4013	5714	4700
700	4713	4908	4740	4653	4744	6855	5572
800	5443	5690	5479	5350	5484	8026	6460
900	6182	6484	6227	6058	6234	9224	7364
1000	6929	7288	6984	6771	6993	10447	8284
1100	7686	8100	7750	7469	7762	11692	9222
1200	8152	8921	8524	8181	8540	12960	10176
1300	9227	9748	9308	8892	9326	14240	11147
1400	10009	10582	10098	9620	10120	15540	12130
1500	10799	11422	10895	10352	10921	16860	13140
1600	11600	12270	11703	11072	11729	18190	14160
1700	12400	13120	12510	11799	12540	19530	15190
1800	13210	13970	13330	12520	13360	20890	16240
1900	14020	14830	14150	13250	14190	22250	17300
2000	14840	15700	14970	14000	15020	23630	18380
2100	15670	16560	15800	14780	15850	25010	19470
2200	16490	17430	16640	15570	16690	26400	20570
2300	17340	18310	17480	16360	17530	27800	21690
2400	18180	19190	18320	17140	18380	29210	22810
2500	19020	20070	19170	17940	19230	30620	23950
3000	23280	24520	23460	21880	23520	37750	29780
3500	27600	29050	27810	26020	27860	45020	35820
4000	31950	33660	32190	30280	32240	52400	42020
4500	36340	38340	36620	34560	36660	59820	48340
5000	40760	43100	41090	39010	41100	67300	54770
5500	45210	47910	45590	43480	45560	74820	61270
6000	49670	52780	50120	48010	50040	82400	67840
6500	54150	57700	54680	52630	54530	90020	74440

		H @ 475°F		H @ 350°F
	mols/hr	Btu/lb-mol	Btu/hr	Btu/hr
H_2S	58.04	3 739.3	217 030	153 600
CO_2	159.10	4 339.5	690 410	480 960
H_2O	294.10	3 631.8	1 068 110	760 540
SO_2	29.02	4 579.3	132 890	93 010
N_2	582.65	3 100.3	1 806 390	1 292 900
S_6	0.26	9 143	2 380	910
S_8	0.75	11 896	8 920	7 110
	1123.92		3 926 130	2 789 030

$$\text{Reheater Heat Duty} = 3\,926\,130 - 2\,789\,030$$

$$= 1\,137\,100 \text{ Btu/hr}$$

NOTE: At 475°F, the molecular distribution of sulfur vapor species (Fig. 22-20) is 0.255 S6 and 0.745 S8.

Step 5 1st Catalytic Converter

In the temperature range of 400°F-700°F prevailing in the catalytic reactors, the Claus reaction equilibrium involving formation of S_2, S_6, and S_8 should all be used in equilibrium calculations. However, a good approximation is obtained (usually within 1% total overall conversion) if only the reaction to form S_8 is considered.

Assume y mols of H_2S react.

FIG. 22-28

Calculation of Reaction Furnace Temperature

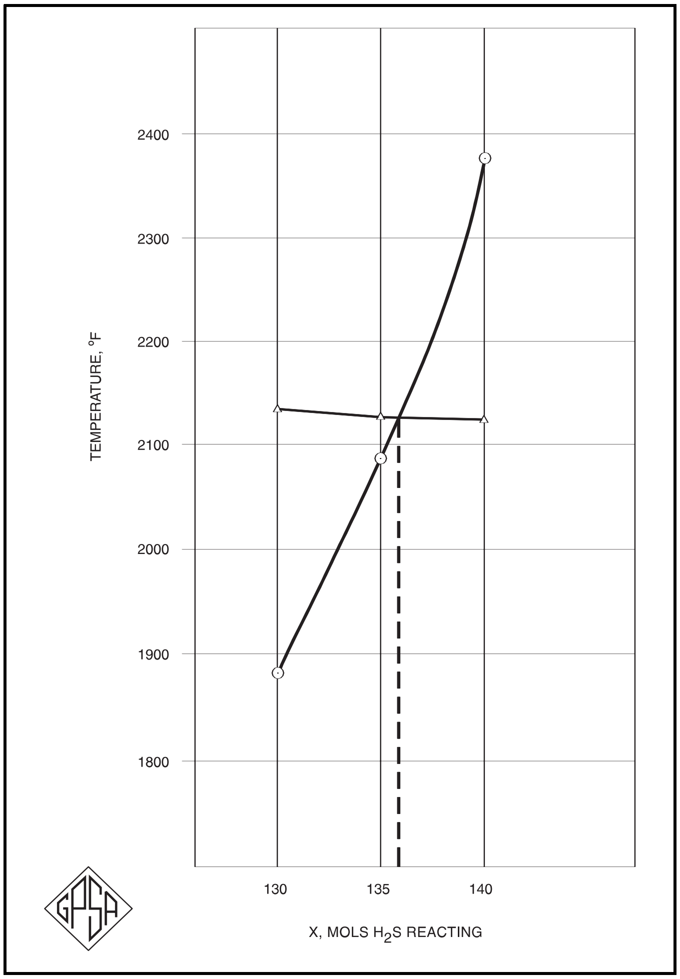

$$\begin{array}{cccc} 2\,H_2S\ + & SO_2\ \rightarrow & 2\,H_2O\ + & \tfrac{3}{8}\,S_8 \\ y & \tfrac{1}{2}\,y & y & \tfrac{3}{16}\,y \end{array}$$

ΔH @ 77°F = −45 060 Btu

	Feed Gas @ 475°F mols/hr	Outlet Conditions mols/hr
H_2S	58.04	58.04 – y
CO_2	159.10	159.10
H_2O	294.10	294.10 + y
SO_2	29.02	29.02 – y/2
N_2	582.65	582.65
S_6	0.26	—
S_8	0.75	0.95 + (3⁄16)y
	1123.86	1123.86 – 0.3125y

at equilibrium

$$K_p = \frac{[H_2O]^2\,[S_8]^{3/8}}{[H_2S]^2\,[SO_2]}\left[\frac{\pi}{\text{total mols}}\right]^{\frac{3}{8}-1}$$

$$= \frac{[294.10 + y]^2\,[0.95 + (3/16)\,y]^{3/8}}{[58.04 - y]^2\,[29.02 - y/2]}\left[\frac{[1.2]}{[1123.86 - 0.3125y]}\right]^{-5/8}$$

y, mols/hr (assumed)	K_p (calculated)	Equilibrium Temperature (from Fig. 22-26)
36	3130	597°F
38	4299	580°F
40	6051	566°F

For each assumed value of y, calculate the total outlet stream enthalpy (using the data in Fig. 22-27) and the overall converter heat balance. For example, for y = 38 mols/hr

	Outlet Stream mols/hr	H @ 580°F Btu/lb-mol	 Btu/hr
H_2S	20.04	4 685	93 890
CO_2	159.10	5 493	873 940
H_2O	332.10	4 528	1 503 750
SO_2	10.02	5 775	57 870
N_2	582.65	3 848	2 242 040
S_6	3.10	11 395	35 320
S_8	5.75	14 825	85 240
	1112.76		4 892 050

Heat Balance

Heat In (from Step 4)		=	3 926 130 Btu/hr
Claus Reaction	(38/2) (45 060)	=	856 140 Btu/hr
Total Heat Out		=	4 782 270 Btu/hr

NOTE: At 580°F, the molecular distribution of sulfur species (Fig. 22-20) is 0.35 S_6 and 0.65 S_8.

These calculated values are plotted in Fig. 22-31. By interpolation, a value of y = 38.7 mols/hr meets both equilibrium and thermodynamic conditions and the converter outlet temperature is 575°F ($K_p \cong 4790$). [NOTE: At 575°F, the molecular distribution of sulfur species is 0.345 S_6 and 0.655 S_8.]

	Converter Outlet mols/hr	H@ 575°F Btu/lb-mol	 Btu/hr
H_2S	19.34	4 640	89 740
CO_2	159.10	5 437	865 030
H_2O	332.80	4 486	1 492 940
SO_2	9.67	5 718	55 290
N_2	582.65	3 813	2 221 640
S_6	3.05	11 287	34 430
S_8	5.79	14 688	85 040
	1112.40		4 844 110

Step 6 2nd Sulfur Condenser

Repeat procedure of Step 3.

Step 7 2nd Reheater

Repeat procedure of Step 4.

Step 8 2nd Catalyst Converter

Repeat procedure of Step 5.

These calculation steps are continued for the number of catalytic converter stages being utilized. For this example, a three-stage plant is assumed and the total calculated **conversion** efficiency is about 98%. Total **recovery** efficiency, after allowing for sulfur vapor losses and about ½% for liquid sulfur entrainment, is about 97% and the tail gas composition is approximately as follows:

FIG. 22-29

Heat of Dissociation of Sulfur Vapor Species

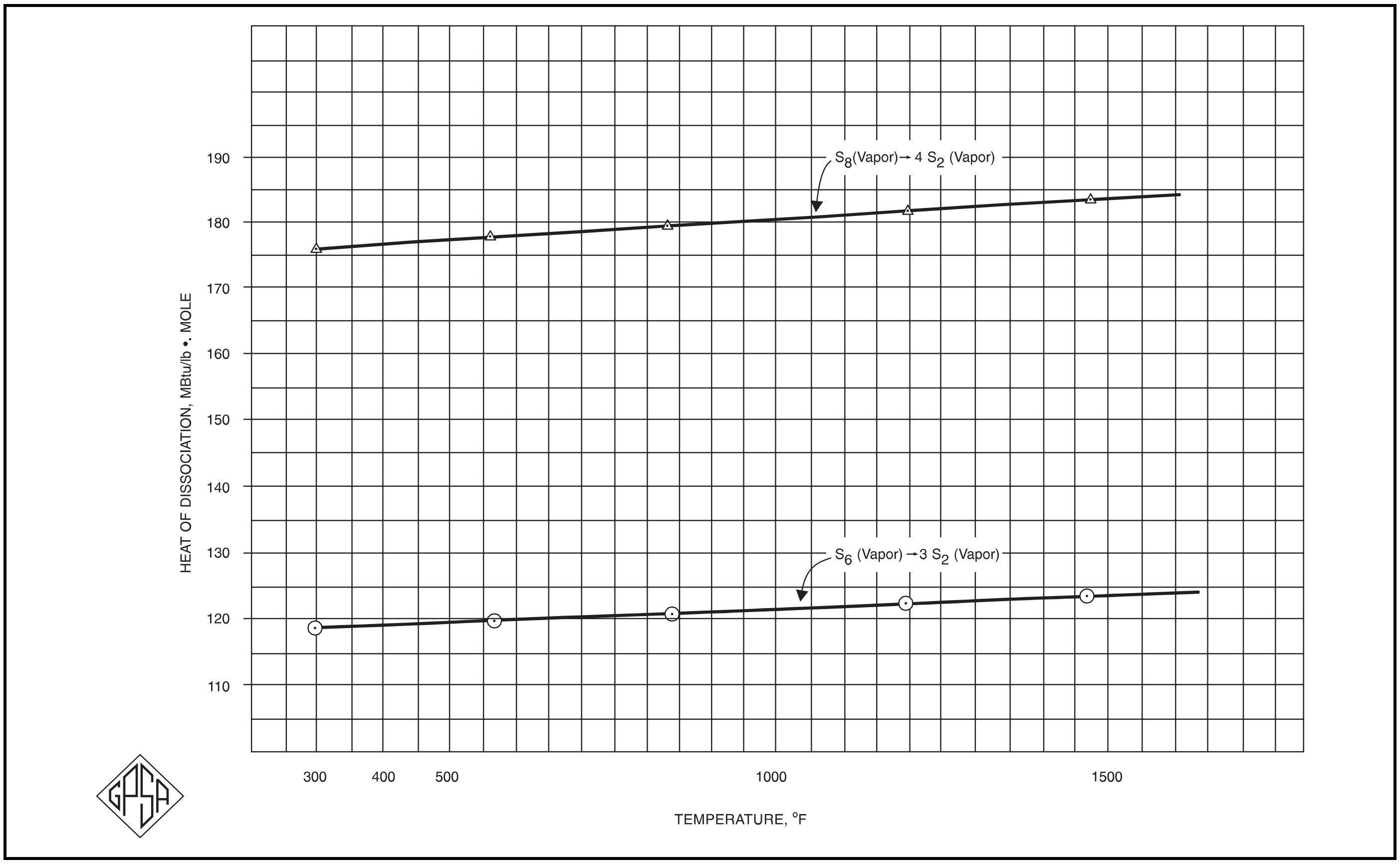

	mols/hr	H @ 300°F	
		Btu/lb-mol	Btu/hr
H_2S	3.88	2216	8 600
CO_2	159.10	2509	399 180
H_2O	348.26	2171	756 070
SO_2	1.94	2667	5 170
N_2	582.65	1868	1 088 390
S_6 (vapor)	0.02	5460	110
S_8 (vapor)	0.22	7102	1 560
S_{liq} (as S_1)	1.40	–3815	–5 340
	1097.47		2 253 740

This is the feed to the incinerator. Assuming 50% excess air (based upon combustibles) and an outlet temperature of 1000°F, the fuel gas requirement and stack gas volume can be calculated as follows:

Step 1. Calculate oxygen required for combustibles in feed gas

$H_2S + 3/2\ O_2 \rightarrow H_2O + SO_2$ from Eq 22-2

ΔH @ 77°F = –223 100 Btu

$S_1 + O_2 \rightarrow SO_2$ **Eq 22-10**

ΔH @ 77°F = –256 100 Btu

H_2S: 1.5 (3.88) = 5.82 mols/hr O_2
S_1: 1.0 (3.28) = 3.28 mols/hr O_2
9.10 mols/hr O_2
+ 50% = 13.65 mols/hr O_2

	Feed	Air		
			H @ 100°F	
	mols/hr	mols/hr	Btu/lb-mol	Btu/hr
H_2S	3.88	—	—	—
CO_2	159.10	—	—	—
H_2O	348.26	1.93	545.3	1 050
SO_2	1.94	—	—	—
N_2	582.65	51.33	473.3	24 290
S (as S_1)	3.28	—	—	—
O_2	—	13.65	476.7	6 510
	1099.11	66.91		31 850

	Products		
	mols/hr	H @ 1000°F	
		Btu/lb-mol	Btu/hr
H_2S	—	—	—
CO_2	159.10	10 447	1 662 120
H_2O	354.07	8 284	2 933 120
SO_2	9.10	10 840	98 640
N_2	633.98	6 929	4 392 850
S (as S_1)	—	—	—
O_2	4.55	7 288	33 160
	1160.80	—	9 119 890

FIG. 22-30

Molar Heat of Condensation of S_6 and S_8

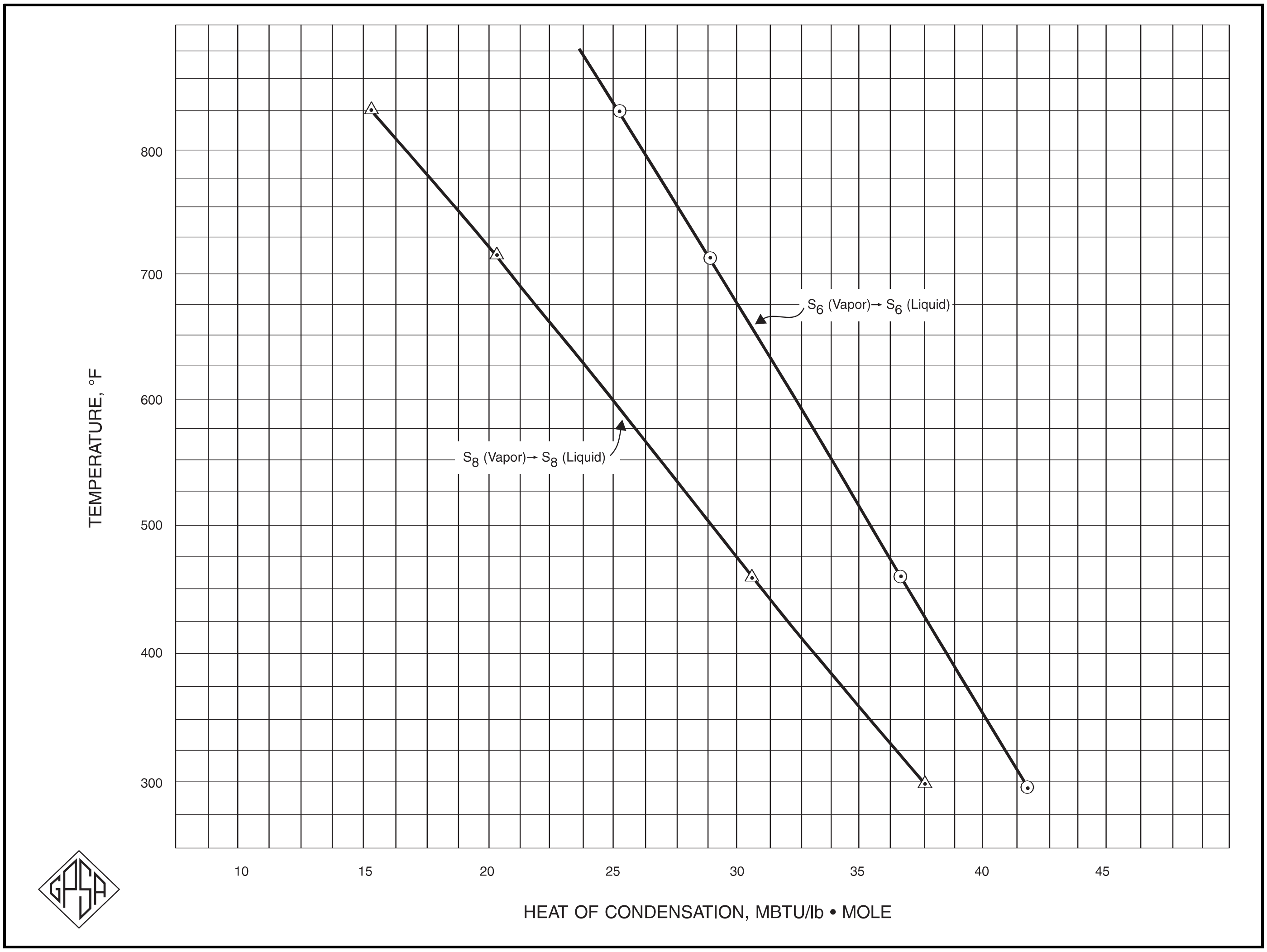

Heat Balance

Heat Out		9 119 890 Btu/hr
Heat In		
Feed @ 300°F		2 253 740 Btu/hr
Air @ 100°F		31 850 Btu/hr
H_2S Combustion	3.88 (223 100) =	865 630 Btu/hr
S_1 Combustion	3.28 (256 100) =	840 010 Btu/hr
		3 991 230 Btu/hr
Heat Gained by Feed Gas		5 128 660 Btu/hr

Step 2. Calculate net heat release for fuel (assumed to be methane) at 50% excess air, using 10 mols/hr as the base rate.

$$CH_4 + 2\,O_2 \rightarrow CO_2 + 2\,H_2O$$

$$\Delta H \text{ @ } 77°F = -345\,170 \text{ Btu}$$

Fuel

		H @ 100°F	
	mols/hr	Btu/lb-mol	Btu/hr
CH_4	10.0	576.3	5760
CO_2	—	—	—
O_2	—	—	—
N_2	—	—	—
H_2O	—	—	—
	10.0		5760

Air

		H @ 100°F	
	mols/hr	Btu/lb-mol	Btu/hr
CH_4	—	—	—
CO_2	—	—	—
O_2	30.0	476.7	14 300
N_2	112.81	473.3	53 390
H_2O	4.24	545.3	2 310
	147.05		70 000

FIG. 22-31

Calculation of Converter Outlet Temperature

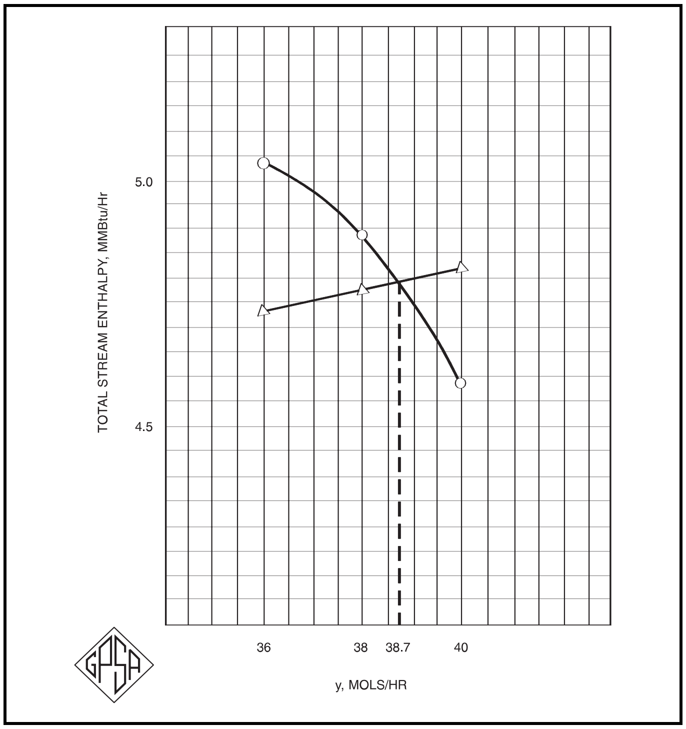

	Combustion Products		
		H @ 1000°F	
	mols/hr	Btu/lb-mol	Btu/hr
CH_4	—	—	—
CO_2	10	10 447	104 470
O_2	10	7 288	72 880
N_2	112.81	6 929	781 660
H_2O	24.24	8 284	200 800
	157.05		1 159 810

Heat Balance

Heat In	
Fuel	5 760 Btu/hr
Air	70 000 Btu/hr
C_1 Combustion 10 x 345170	3 451 700 Btu/hr
	3 527 460 Btu/hr
Heat Out	1 159 810 Btu/hr
Net Heat Release of Fuel	2 367 650 Btu/hr

Step 3. Calculate fuel requirement and stack gas rate and composition

$$\text{Fuel required} = \frac{\text{Heat gained by feed gas}}{\text{Net Heat Release of Fuel}}\,(10\text{ mols/hr})$$

$$= \frac{5\,128\,660}{2\,367\,650}\,(10) = 21.66\text{ mols/ hr}$$

	Stack Gas	
	mols/hr	mol %
CO_2	180.76	12.04
H_2O	406.57	27.09
SO_2	9.10	0.61
N_2	878.33	58.51
O_2	26.21	1.75
	1500.97	100.00

Total Heat Release

Fuel =	21.66 (345 170)	=	7 476 380 Btu/hr
H_2S (From Step 1)			865 630 Btu/hr
S (From Step 1)			840 010 Btu/hr
			9 182 020 Btu/hr

SULFUR PRODUCT SPECIFICATIONS

A sulfur product meeting the following specifications will normally satisfy the requirements of the major consumers of sulfur such as manufacturers of sulfuric acid, chemicals, fertilizers, etc.:

Purity	99.5%-99.9% by weight (dry basis)
Acidity (as H_2SO_4)	Less than 0.01% by weight
Moisture	Less than 1.0% by weight
Ash	Less than 0.05% by weight
Carbonaceous Matter	Less than 0.025% by weight
Arsenic, Tellurium, Selenium	Commercially Free*
Color (see Note below)	Bright yellow at ambient temperature

*Contents of less than 0.25 ppmw of arsenic and 2.0 ppmw of selenium and tellurium are usually considered as "commercially free."

NOTE: The color of sulfur is an important property because it gives an immediate indication of product purity. The sulfur is a bright yellow if the impurity content is less than about 0.02% by weight. Small amounts of carbon (soot) change the bright yellow color to dull yellow or green; "dark" sulfur in which the yellow color has a shade of gray or brown usually contains 0.1%-0.5% by weight of carbon. For sulfuric acid manufacturers, however, sulfur color is usually less important than ash and heavy metal contents.

INSTRUMENTATION

Since the quantity of acid gas being handled by the sulfur recovery unit is determined by upstream sweetening facilities, the sulfur plant feed gas rate is normally not controlled. However, during startup or in an emergency, part or all of the feed gas can be directed to flare.

For the main burner, the volume of feed gas is measured and the amount of air is controlled in ratio with the amount of acid gas. Both feed-forward[25], in which the measured feed gas flow rate and assumed composition are used, and feed-back, in which the measured ratio of H_2S:SO_2 in the plant tail gas is used, can be utilized to adjust the air/feed gas ratio for maximum sulfur recovery. A combination feed-forward/feed-back control system, in which the feed gas flow rate is used to control a main air valve and to set an approximate air/feed gas ratio and the ratio of H_2S:SO_2 in the tail gas is used to control a trim air valve, is often utilized.

For inline burners, the process stream temperature is normally used to adjust the combustion air rate and the amount of fuel (either acid gas or fuel gas) is controlled in ratio with the amount of air. Because these burners normally operate with a near substoichiometric air, this control system will result in a more rapid response to changes in process requirements.

Although conventional orifice meters can be used for acid gas and air measurement, the venturi meter is often more suitable. Thermocouples are used for most temperature measurements and a multipoint strip chart temperature recorder can be useful to operations by indicating trends. Tail gas analyzers (for H_2S and SO_2) are usually of the ultraviolet type although chromatographic analyzers have been utilized successfully. Except at the front of the plant and on air, acid gas or fuel gas systems, pressure gauges are not normally installed. Sample connections should be as short as possible; sample valves should be plug valves. Sample connections and valves should be fully steam-jacketed.

Measurement of reaction furnace temperature is sometimes used as an indication of satisfactory air/acid gas control. Both thermocouples and infra-red type instruments have been utilized; however, thermocouple life is short (6-9 months reported) and the response time for infra-red instruments can be poor.

Conventional infra-red instruments often can be utilized as flame monitoring devices for both the main burner and the inline burners; combination infra-red/ultraviolet (flicker-type) instruments have also been used successfully.

FIG. 22-32

Plot Showing That a Slight Change in Air to Acid Gas Ratio at the Head End of the Plant Will Make a Significant Change in the Tail Gas Ratio, H_2S:SO_2

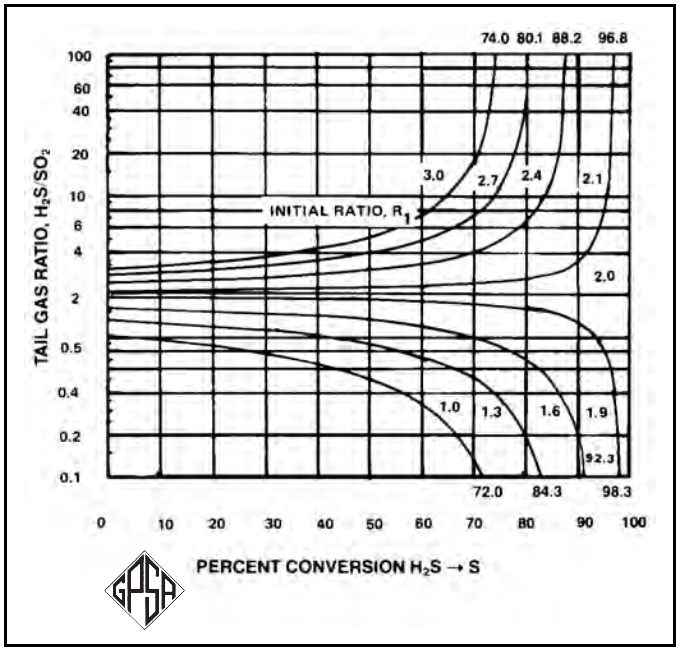

FIG. 22-33

Theoretical Flame Temperatures for Claus Process

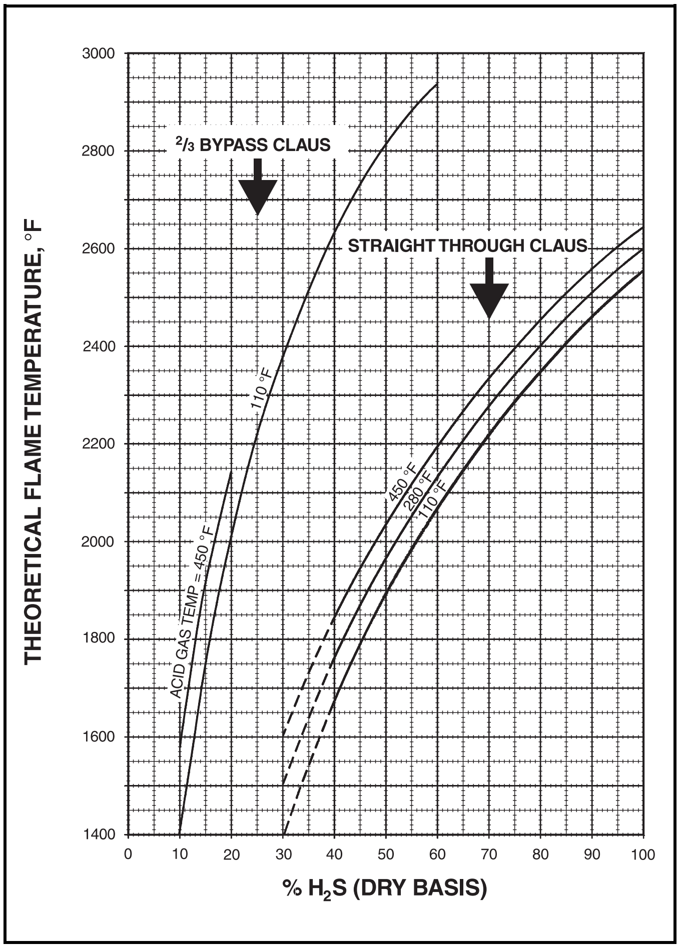

OPERATIONAL ASPECTS

Overall Claus plant conversion efficiency is maximized by maintaining the stoichiometric H_2S:SO_2 ratio of 2:1 in the process gas to the catalytic converters. The most suitable point for this determination is at the outlet of the last sulfur condenser because a slight change in the air:acid gas ratio at the front of the plant will result in a significant change in the H_2S:SO_2 ratio in the tail gas and in the theoretical overall sulfur recovery (Fig. 22-32). An H_2S:SO_2 ratio in the tail gas of between 1:1 and 3:1 can be considered normal although the desired goal should be a 2:1 ratio.

A simple method of determining the H_2S:SO_2 ratio is by the use of stain tubes. This determination should be done at least once every 8 hours during startup, plant test runs, and whenever significant changes in plant operating variables are observed. Other analytical procedures involving wet chemistry, chromatography, or UV photometry are also suitable for adjusting plant operations.

Because of the effect of temperature upon the Claus reaction equilibrium, control of temperatures at various points in the process sequence is important. Unexpected changes in operating temperatures usually denote changes in conversion efficiency. For example, a decrease in the temperature rise across a catalytic converter bed is an indication of declining catalyst activity which may be caused by adsorption of elemental sulfur on the active surface area of the catalyst. Operating the catalyst bed at a temperature 50-100°F higher than normal for 24-48 hours will remove this sulfur from the catalyst and can restore its activity.

CLAUS PLANT MAINTENANCE

Maintenance and repair of Claus plant equipment requires special precautions because of the physical properties of sulfur and the potential hazards and/or toxicity of many plant process streams. Equipment handling liquid sulfur should be drained completely and other equipment should be purged of all hazardous materials (see shutdown portion of this section). A satisfactory welding procedure can involve sandblasting and/or grinding to a bare metal surface, extensive preheating, and the use of Type 309 stainless steel rod.

REFERENCES

1. Maddox, R. N., and Morgan, D. J., *Gas and Liquid Sweetening*, Campbell Petroleum Series, 1998
2. Gamson, B. W. and Elkins, R. H., "Sulfur from Hydrogen Sulfide", Chemical Engineering Progress, Vol. 49, No. 4, April 1953, 203-215
3. Valdes, A. R., "A New Look at Sulfur Plants", Hydrocarbon Processing and Petroleum Refiner, Vol. 43, 104-108, (March 1964), 122-124, (April 1964)
4. Eastman, E. D. and McGavock, W. C., J. Am. Chem. Soc., Vol. 59, 145-151 (1937)
5. Lewis, G. N. and Randall, M., J. Am. Chem. Soc., Vol. 33, 476-488 (1911)
6. Dalin, G. A. and West, J. R., J. Phys. and Colloid Chem., Vol. 54, 1215-1221 (1950)
7. Stull, D. R., Ind. Eng. Chem., Vol. 41, 1468-1473 (1949)
8. Stull, D. R., Prophet, H., et al, JANAF Thermochemical Tables, National Bureau of Standards (1971)
9. West, W. A., and Menzies, A. W. C., J. Phys. Chem., Vol. 33, 1880-1892 (1929)
10. Kelley, K. K., The Thermodynamic Properties of Sulphur and Its Inorganic Compounds, Bulletin 406, U.S. Bureau of Mines (1937)
11. Kobe, K. A. and Long, E. G., Petroleum Refiner, Vol. 28, No. 2, 113-116 (Feb. 1949); Vol. 28, No. 11, 127-132 (Nov. 1949); Vol. 29, No. 1, 126-130 (Jan. 1950)
12. Fanelli, R., Ind. Eng. Chem., Vol. 38, 39 (1946) and Vol. 41, 2031 (1949)
13. Lagas, J. A., Stop Emissions from Liquid Sulfur, Hydrocarbon Processing, Vol. 61, 85-89 (October 1982)
14. Goar, B. G., Sulfur Forming and Degassing Processes, 1984 Gas Conditioning Conference, University of Oklahoma
15. Goar, B. G., and Sames, J. A., Tail Gas Clean Up Processes — A Review, 1983 Gas Conditioning Conference, University of Oklahoma
16. West, J. R., Ind. Eng. Chem., Vol. 42, 713-718 (April 1950)
17. King, F. W., Oil & Gas J., Vol. 72, 164-165 (June 3, 1974)
18. Rubero, P. A., J. Chem. Eng. Data, Vol. 9, 481-484 (1964)
19. Parnell, D. C., Hydrocarbon Processing, Vol. 64, 114-118 (Sept. 1985)
20. Ford, G. P., and LaMer, V. K., J. Phys. Chem., Vol. 72, 1959-1964 (1950)
21. Johnston, H. E., Kelley, M. D., and McKinley, D. L., Ind. Eng. Chem., Vol. 42, No. 11, 2298-2302 (1950)
22. Wiewiorowski, T. K. and Touro, F. J., J. Phys. Chem., Vol. 70, No. 1, 234-238 (1966)
23. Ando, M. and Kawahara, H., Hydrocarbon Processing, Vol. 55, 90-92 (December 1976)
24. Solinhac, J., Fr Patent No. 1435788 (1964)
25. Dougherty, J. F. and Morgan, D. J., Oil & Gas J., Vol. 78, 68-70 (May 26, 1980)
26. Kellas, A. M., J. Chem. Soc., Vol. 113, 903-922 (1918)
27. Kettner, R., Liermann, N., “New Claus Tail-Gas Process Proved in German Operations,” Oil & Gas Journal, Jan. 11, 1988, p 63-66.
28. Berben, P.H., Borsboom, J., Lagas, J.A., “SUPERCLAUS, the Answer to Claus Plant Limitations,” 38th Canadian Chemical Engineering Conference, Oct. 2-5, 1988.
29. Tonjes, M., Hatcher, N., Johnson, J., Stevens, D. (Black & Veatch Pritchard Inc.), *"Oxygen Enrichment Revamp Checklist for Sulfur Recovery Facilities,"* Lawrence Reid Gas Conditioning Conference, February/March 2000, Norman Oklahoma.
30. Kwong, K. V., "PROClaus Process: An Evolutionary Enhancement to Claus Performance," Lawrence Reid Gas Conditioning Conference, February/March 2000, Norman Oklahoma.
31. McIntush, K. et. al. "H_2S Removal and Sulfur Recovery Options for High Pressure Natural Gas with Medium Amounts of Sulfur", Gas Processors Association, March 2001.
32. Hakka, L. E., Parisi, P. J. (Cansolv Technologies Inc.), Hatcher,N. A., Johnson, J. E. (Black & Veatch Pritchard Inc.), "Integrated CANSOLV System Technology into Your Sour Gas Treatment/Sulfur Recovery Plant," Lawrence Reid Gas Conditioning Conference, March 1998, Norman Oklahoma.
33. Calabrian Corporation,"SUPER Process Doubles Claus Capacity," Sulphur Magazine, March-April, 1999.
34. Clark, P. D., Lesage, K. L., Fitzpatrick, E., and Davis, P. M., "H_2S Solubility in Liquid Sulfur as a Function of Temperature and H_2S Gas Phase Partial Pressure," Alberta Sulphur Research Ltd., Quarterly Bulletin Vol. XXXIV, No. 3, October-December, 1997.
35. Clark, P. D., Alberta Sulphur Research Ltd., personal communication with R. E. Heigold, January 2002.
36. Shuai, Xiaoshan and Meisen, Axel, "New Correlations Predict Physical Properties of Elemental Sulfur," Oil and Gas Journal, October 16, 1995.

BIBLIOGRAPHY

1. Lewis, G., Randall, M., Thermodynamics and the Free Energies of Chemical Substances, pp. 530-550, McGraw Hill (1923)
2. Tuller, William N. (Editor), The Sulphur Data Book, McGraw Hill (1954)
3. Grekel, H., Palm, J. W., and Kilmer, J. W., Oil & Gas J., Vol. 66, 88, 93-95, 97, 98, 101 (October 28, 1968)
4. Grekel, H., Kunkel, L. V., and McGalliard, R. L., Chem. Engr. Prog., Vol. 61, 70-73 (September 1965)
5. Opekar, P. C. and Goar, B. G., Oil & Gas J., Vol. 64, 86-89 (May 2, 1966)
6. Norman, W. S., Oil & Gas J., Vol. 74, 55-60 (November 15, 1976)
7. Knight, W. P., Hydrocarbon Processing, Vol. 57, 239-241 (May 1978)
8. Chute, A., Hydrocarbon Processing, Vol. 56, 119-124 (April 1977)
9. Tran, J. C., Hydrocarbon Processing, Vol. 61, 91-97 (January 1982)

10. Taggart, G. W., Hydrocarbon Processing, Vol. 60, 155-157 (March 1981)

11. Taggart, G. W., Hydrocarbon Processing, Vol. 59, 135-137 (April 1980)

12. Chao, J., Hydrocarbon Processing, Vol. 59, 217-223 (November 1980)

13. Meisen, L. and Bennett, H., Hydrocarbon Processing, Vol. 53, 171-174 (November 1974)

14. Goar, B. G., Hydrocarbon Processing. Vol. 53, 129-132 (July 1974)

15. Palm, J. W., Hydrocarbon Processing, Vol. 51, 105-108 (March 1972)

16. Solomon, P., Oil & Gas J., Vol. 71, 85-90 (August 27, 1973)

17. Goar, B. G., Hydrocarbon Processing, Vol. 47, 248-252 (September 1968)

18. Sudduth, L. F., Farmer, S. K., and Grekel, H., Oil & Gas J., Vol. 68 (December 14, 1970)

19. Raymont, M. E. D., Hydrocarbon Processing, Vol. 54, 177-179 (May 1975)

20. Kerr, R. K. and Paskall, H. G., Energy Processing/Canada, 38-44 (Nov.-Dec. 1976)

21. Kerr, R. K. and Berlie, E. M., Energy Processing/Canada, 42-46 (May-June 1977)

22. Fischer, H., Hydrocarbon Processing, Vol. 58, 125-129 (March 1979)

23. Pearson, M. J., Energy Processing/Canada, 38-42 (July-August 1976)

24. Kerr, R. K., Paskall, H. G. and Ballash, N., Energy Processing/Canada, 40-51 (Jan.-Feb. 1977)

25. Kerr, R. K., Energy Processing/Canada, 28-34 (July-August 1976)

26. Fischer, H., Hydrocarbon Processing, Vol. 53, 125-130 (October 1974)

27. Parnell, D. C., Chem. Eng. Prog., Vol. 69, 89-92 (August 1973)

28. Hayford, J. S., Hydrocarbon Processing, Vol. 52, 95-96 (October 1973)

29. Hyne, J. B., Proc. 51st Annual Convention NGPA, 85-94 (1972)

30. Ball, F. J., Brown, G. N., Davis, J. E., Repik, A. J., and Torrence, S. L., Hydrocarbon Processing, Vol. 51, 125-127 (October 1972)

31. Zey, A., White, S. and Johnson, D., Chem. Eng. Prog., Vol. 76, 76-78 (October 1980)

32. Goddin, C. S., Hunt, E. B. and Palm, J. W., Proc. 53rd Annual Convention GPA (1974)

33. Nobles, J. E., Palm, J. W., Knudtson, D. K., Hydrocarbon Processing, Vol. 56, 143-145 (July 1977)

34. Andrews, E. J. and Kouzel, B., Proc. 53rd Annual Conv. GPA (1974)

SECTION 23

Physical Properties

This section contains charts, correlations, tables and procedures for predicting physical properties of hydrocarbons and other components of interest to the natural gas industry. Figure 23-1 contains the nomenclature used in this section.

Figure 23-2 is a listing of the physical properties for a number of hydrocarbons and other selected compounds. Following the property values are detailed footnotes and references for the entries in Fig. 23-2. After Fig. 23-2, this Section contains procedures for estimating the Z-factor for gases and material relating to hydrocarbon fluid densities, boiling points, ASTM distillation, critical properties, acentric factors, vapor pressures, viscosity, thermal conductivity, surface tension, and gross heating value.

FIG. 23-1

Nomenclature

B = second virial coefficient for a gas mixture, $(\text{psia})^{-1}$
B' = mole fraction of H_2S in a sour gas stream, Eq 23-6
B_{ii} = second virial coefficient for component i
B_{ij} = second cross virial coefficient for components i and j
$b_i^{1/2}$ = summation factor for component i
c = cost of gas
CABP = cubic average boiling point, °F
d = density, g/cc
gal = gallons
G = specific gravity or relative density (gas density)
G_i = specific gravity (gas gravity) of ideal gas, MW/MW_a
G_i^{id} = molecular weight ratio of component i in mixture
Hv^{id} = gross heating value per unit volume of ideal gas, Btu/cu ft
K_W = Watson characterization factor, Fig. 23-12
k = thermal conductivity, Btu/[(hr ft^2 °F)/ft]
k_A = thermal conductivity at one atmosphere, Btu/[(hr ft^2 °F)/ft]
lbm = pounds mass
M = mass fraction
m = mass, lbm
MW = Molecular weight, lbm/lbmol
MABP = molal average boiling point, °F or °R
MeABP = Mean average boiling point, °F or °R
n = number of moles, (mass/*MW*)
p = price of real gas
p^{id} = price of ideal gas
P = pressure, psia
P_c' = pseudo-critical pressure adjusted for acid gas composition, psia
P_{vp} = vapor pressure at a reduced temperature of 0.7
$P_w^{\bullet}$ = vapor pressure of water, 0.25636 psia at 60°F
R = gas constant, 10.73 (psia ft^3)/(°R lbmol) for all gases (Section 1 has *R* in other units)
S = specific gravity at 60°/60°F
T = absolute temperature, °R
t = ASTM D-86 distillation temperature for a volumetric fraction, °F or °R, Eq 23-11
T_c' = pseudo-critical temperature adjusted for acid gas composition, °R
V = volume, cu ft
v = volume fraction
$\dot{V}$ = volumetric flow rate, real gas
$\dot{V}^{id}$ = volumetric flow rate, ideal gas
VABP = volumetric average boiling point, °F
W = mass, lbm
WARP = weight average boiling point, °F
y_i = mole fraction of component i from analysis on dry basis, Eq 23-38
x = mole fraction in liquid phase
$y_i(cor)$ = mole fraction of component i adjusted for water content
y = mole fraction in gas phase
Z = Z-factor = PV/nRT

Greek

ε = pseudo-critical temperature adjustment factor, Eq 23-6
θ = $MeABP/T_{pc}$
ρ = density, lbm/ ft^3
μ = viscosity at operating temperature and pressure, centi poise
μ_A = viscosity at 14.7 psia (1 atm) and operating temperature, centipoise
ξ = factor defined by Eq 23-20
σ = surface tension, dynes/cm
ω = acentric factor
η = kinematic viscosity, centistokes
Δt = accounting period

Subscripts

a = air
b = boiling
c = critical
i = component i
L = liquid
m = mixture
pc = pseudo-critical
r = reduced state
V = vapor
v = volume
w = water

Superscripts

id = ideal gas
w = water
° = reference state

FIG. 23-2

Physical Constants

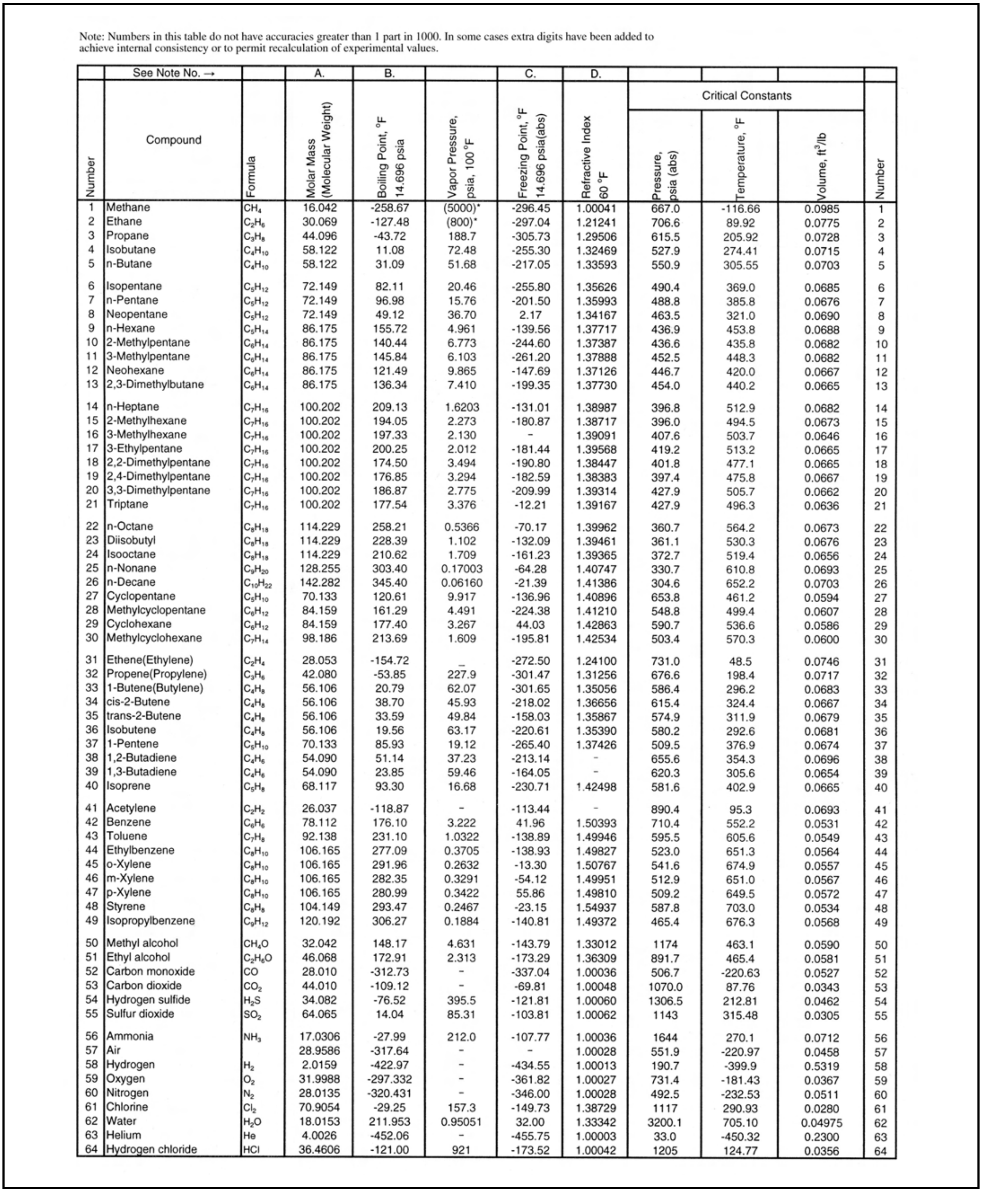

Note: Numbers in this table do not have accuracies greater than 1 part in 1000. In some cases extra digits have been added to achieve internal consistency or to permit recalculation of experimental values.

	See Note No. →		A.	B.		C.	D.				
								Critical Constants			
Number	Compound	Formula	Molar Mass (Molecular Weight)	Boiling Point, °F 14.696 psia	Vapor Pressure, psia, 100 °F	Freezing Point, °F 14.696 psia(abs)	Refractive Index 60 °F	Pressure, psia (abs)	Temperature, °F	Volume, ft^3/lb	Number
1	Methane	CH_4	16.042	-258.67	(5000)*	-296.45	1.00041	667.0	-116.66	0.0985	1
2	Ethane	C_2H_6	30.069	-127.48	(800)*	-297.04	1.21241	706.6	89.92	0.0775	2
3	Propane	C_3H_8	44.096	-43.72	188.7	-305.73	1.29506	615.5	205.92	0.0728	3
4	Isobutane	C_4H_{10}	58.122	11.08	72.48	-255.30	1.32469	527.9	274.41	0.0715	4
5	n-Butane	C_4H_{10}	58.122	31.09	51.68	-217.05	1.33593	550.9	305.55	0.0703	5
6	Isopentane	C_5H_{12}	72.149	82.11	20.46	-255.80	1.35626	490.4	369.0	0.0685	6
7	n-Pentane	C_5H_{12}	72.149	96.98	15.76	-201.50	1.35993	488.8	385.8	0.0676	7
8	Neopentane	C_5H_{12}	72.149	49.12	36.70	2.17	1.34167	463.5	321.0	0.0690	8
9	n-Hexane	C_5H_{14}	86.175	155.72	4.961	-139.56	1.37717	436.9	453.8	0.0688	9
10	2-Methylpentane	C_6H_{14}	86.175	140.44	6.773	-244.60	1.37387	436.6	435.8	0.0682	10
11	3-Methylpentane	C_6H_{14}	86.175	145.84	6.103	-261.20	1.37888	452.5	448.3	0.0682	11
12	Neohexane	C_6H_{14}	86.175	121.49	9.865	-147.69	1.37126	446.7	420.0	0.0667	12
13	2,3-Dimethylbutane	C_6H_{14}	86.175	136.34	7.410	-199.35	1.37730	454.0	440.2	0.0665	13
14	n-Heptane	C_7H_{16}	100.202	209.13	1.6203	-131.01	1.38987	396.8	512.9	0.0682	14
15	2-Methylhexane	C_7H_{16}	100.202	194.05	2.273	-180.87	1.38717	396.0	494.5	0.0673	15
16	3-Methylhexane	C_7H_{16}	100.202	197.33	2.130	-	1.39091	407.6	503.7	0.0646	16
17	3-Ethylpentane	C_7H_{16}	100.202	200.25	2.012	-181.44	1.39568	419.2	513.2	0.0665	17
18	2,2-Dimethylpentane	C_7H_{16}	100.202	174.50	3.494	-190.80	1.38447	401.8	477.1	0.0665	18
19	2,4-Dimethylpentane	C_7H_{16}	100.202	176.85	3.294	-182.59	1.38383	397.4	475.8	0.0667	19
20	3,3-Dimethylpentane	C_7H_{16}	100.202	186.87	2.775	-209.99	1.39314	427.9	505.7	0.0662	20
21	Triptane	C_7H_{16}	100.202	177.54	3.376	-12.21	1.39167	427.9	496.3	0.0636	21
22	n-Octane	C_8H_{18}	114.229	258.21	0.5366	-70.17	1.39962	360.7	564.2	0.0673	22
23	Diisobutyl	C_8H_{18}	114.229	228.39	1.102	-132.09	1.39461	361.1	530.3	0.0676	23
24	Isooctane	C_8H_{18}	114.229	210.62	1.709	-161.23	1.39365	372.7	519.4	0.0656	24
25	n-Nonane	C_9H_{20}	128.255	303.40	0.17003	-64.28	1.40747	330.7	610.8	0.0693	25
26	n-Decane	$C_{10}H_{22}$	142.282	345.40	0.06160	-21.39	1.41386	304.6	652.2	0.0703	26
27	Cyclopentane	C_5H_{10}	70.133	120.61	9.917	-136.96	1.40896	653.8	461.2	0.0594	27
28	Methylcyclopentane	C_6H_{12}	84.159	161.29	4.491	-224.38	1.41210	548.8	499.4	0.0607	28
29	Cyclohexane	C_6H_{12}	84.159	177.40	3.267	44.03	1.42863	590.7	536.6	0.0586	29
30	Methylcyclohexane	C_7H_{14}	98.186	213.69	1.609	-195.81	1.42534	503.4	570.3	0.0600	30
31	Ethene(Ethylene)	C_2H_4	28.053	-154.72	-	-272.50	1.24100	731.0	48.5	0.0746	31
32	Propene(Propylene)	C_3H_6	42.080	-53.85	227.9	-301.47	1.31256	676.6	198.4	0.0717	32
33	1-Butene(Butylene)	C_4H_8	56.106	20.79	62.07	-301.65	1.35056	586.4	296.2	0.0683	33
34	cis-2-Butene	C_4H_8	56.106	38.70	45.93	-218.02	1.36656	615.4	324.4	0.0667	34
35	trans-2-Butene	C_4H_8	56.106	33.59	49.84	-158.03	1.35867	574.9	311.9	0.0679	35
36	Isobutene	C_4H_8	56.106	19.56	63.17	-220.61	1.35390	580.2	292.6	0.0681	36
37	1-Pentene	C_5H_{10}	70.133	85.93	19.12	-265.40	1.37426	509.5	376.9	0.0674	37
38	1,2-Butadiene	C_4H_6	54.090	51.14	37.23	-213.14	-	655.6	354.3	0.0696	38
39	1,3-Butadiene	C_4H_6	54.090	23.85	59.46	-164.05	-	620.3	305.6	0.0654	39
40	Isoprene	C_5H_8	68.117	93.30	16.68	-230.71	1.42498	581.6	402.9	0.0665	40
41	Acetylene	C_2H_2	26.037	-118.87	-	-113.44	-	890.4	95.3	0.0693	41
42	Benzene	C_6H_6	78.112	176.10	3.222	41.96	1.50393	710.4	552.2	0.0531	42
43	Toluene	C_7H_8	92.138	231.10	1.0322	-138.89	1.49946	595.5	605.6	0.0549	43
44	Ethylbenzene	C_8H_{10}	106.165	277.09	0.3705	-138.93	1.49827	523.0	651.3	0.0564	44
45	o-Xylene	C_8H_{10}	106.165	291.96	0.2632	-13.30	1.50767	541.6	674.9	0.0557	45
46	m-Xylene	C_8H_{10}	106.165	282.35	0.3291	-54.12	1.49951	512.9	651.0	0.0567	46
47	p-Xylene	C_8H_{10}	106.165	280.99	0.3422	55.86	1.49810	509.2	649.5	0.0572	47
48	Styrene	C_8H_8	104.149	293.47	0.2467	-23.15	1.54937	587.8	703.0	0.0534	48
49	Isopropylbenzene	C_9H_{12}	120.192	306.27	0.1884	-140.81	1.49372	465.4	676.3	0.0568	49
50	Methyl alcohol	CH_4O	32.042	148.17	4.631	-143.79	1.33012	1174	463.1	0.0590	50
51	Ethyl alcohol	C_2H_6O	46.068	172.91	2.313	-173.29	1.36309	891.7	465.4	0.0581	51
52	Carbon monoxide	CO	28.010	-312.73	-	-337.04	1.00036	506.7	-220.63	0.0527	52
53	Carbon dioxide	CO_2	44.010	-109.12	-	-69.81	1.00048	1070.0	87.76	0.0343	53
54	Hydrogen sulfide	H_2S	34.082	-76.52	395.5	-121.81	1.00060	1306.5	212.81	0.0462	54
55	Sulfur dioxide	SO_2	64.065	14.04	85.31	-103.81	1.00062	1143	315.48	0.0305	55
56	Ammonia	NH_3	17.0306	-27.99	212.0	-107.77	1.00036	1644	270.1	0.0712	56
57	Air		28.9586	-317.64	-	-	1.00028	551.9	-220.97	0.0458	57
58	Hydrogen	H_2	2.0159	-422.97	-	-434.55	1.00013	190.7	-399.9	0.5319	58
59	Oxygen	O_2	31.9988	-297.332	-	-361.82	1.00027	731.4	-181.43	0.0367	59
60	Nitrogen	N_2	28.0135	-320.431	-	-346.00	1.00028	492.5	-232.53	0.0511	60
61	Chlorine	Cl_2	70.9054	-29.25	157.3	-149.73	1.38729	1117	290.93	0.0280	61
62	Water	H_2O	18.0153	211.953	0.95051	32.00	1.33342	3200.1	705.10	0.04975	62
63	Helium	He	4.0026	-452.06	-	-455.75	1.00003	33.0	-450.32	0.2300	63
64	Hydrogen chloride	HCl	36.4606	-121.00	921	-173.52	1.00042	1205	124.77	0.0356	64

FIG. 23-2 (Cont'd)

Physical Constants

Note: Numbers in this table do not have accuracies greater than 1 part in 1000. In some cases extra digits have been added to achieve internal consistency or to permit recalculation of experimental values.

Number	E.			F.	G.	H.	I.			J.		Number
	Density of Liquid 14.696 psia, 60 °F						Ideal Gas 14.696 psia, 60 °F			Specific Heat 60 °F & 14.696 psia		
	Relative Density (specific gravity) 60 °F / 60 °F	lb/gal (wt in vacuum)	gal/lb mol	Tempearture coefficient of density, 1/T(K)	Acentric Factor, ω	Summation Factor, psia^{-1} 60 °F	Relative Density (specific gravity) Air = 1	ft^3 gas/lb	Volume Ratio ft^3 gas/gal liquid	C_p, Ideal Gas Btu/(lb °F)	C_p, liquid Btu/(lb °F)	
1	(0.3)*	(2.5)*	(6.4172)	-	0.0115	0.0116	0.5540	23.655	(59.138)*	0.52725	-	1
2	0.35643	2.9716	10.119	-	0.0994	0.0238	1.0383	12.620	37.503	0.40880	1.0900	2
3	0.50738	4.2301	10.424	-0.00156	0.1529	0.0349	1.5227	8.6060	36.404	0.38970	0.6253	3
4	0.56295	4.6934	12.384	-0.00120	0.1865	0.0444	2.0071	6.5291	30.644	0.38798	0.5633	4
5	0.58408	4.8696	11.936	-0.00108	0.2003	0.0471	2.0071	6.5291	31.794	0.39649	0.5679	5
6	0.62460	5.2074	13.855	-0.00089	0.2284	0.0572	2.4914	5.2598	27.390	0.38311	0.5370	6
7	0.63113	5.2618	13.712	-0.00086	0.2515	0.0603	2.4914	5.2598	27.676	0.38882	0.5439	7
8	0.59624	4.9710	14.514	-0.00104	0.1966	0.0516	2.4914	5.2598	26.146	0.39126	0.5534	8
9	0.66404	5.5363	15.566	-0.00075	0.2993	0.0792	2.9758	4.4036	24.380	0.38696	0.5335	9
10	0.65794	5.4853	15.710	-0.00078	0.2777	0.0743	2.9758	4.4036	24.155	0.38391	0.5268	10
11	0.66902	5.5777	15.450	-0.00075	0.2726	0.0718	2.9758	4.4036	24.562	0.37782	0.5188	11
12	0.65371	5.4501	15.812	-0.00077	0.2331	0.0673	2.9758	4.4036	24.000	0.38202	0.5141	12
13	0.66603	5.5528	15.519	-0.00073	0.2481	0.0685	2.9758	4.4036	24.453	0.37465	0.5141	13
14	0.68819	5.7375	17.464	-0.00068	0.3483	0.0953	3.4602	3.7872	21.729	0.38566	0.5279	14
15	0.68327	5.6966	17.590	-0.00070	0.3312	0.0899	3.4602	3.7872	21.574	0.38225	0.5216	15
16	0.69170	5.7668	17.376	-0.00069	0.3231	0.0899	3.4602	3.7872	21.840	0.37957	0.5137	16
17	0.70291	5.8603	17.099	-0.00069	0.3111	0.0898	3.4602	3.7872	22.194	0.38669	0.5141	17
18	0.67828	5.6550	17.719	-0.00070	0.2870	0.0832	3.4602	3.7872	21.417	0.38687	0.5167	18
19	0.67714	5.6455	17.749	-0.00072	0.3035	0.0844	3.4602	3.7872	21.381	0.39524	0.5241	19
20	0.69720	5.8127	17.239	-0.00059	0.2687	0.0846	3.4602	3.7872	22.014	0.38385	0.5023	20
21	0.69433	5.7887	17.310	-0.00068	0.2501	0.0817	3.4602	3.7872	21.923	0.37797	0.4991	21
22	0.70698	5.8942	19.380	-0.00063	0.3977	0.1214	3.9445	3.3222	19.582	0.38446	0.5250	22
23	0.69806	5.8199	19.627	-0.00066	0.3571	0.1041	3.9445	3.3222	19.334	0.37652	0.5103	23
24	0.69628	5.8050	19.678	-0.00065	0.3043	0.0960	3.9445	3.3222	19.285	0.38154	0.5172	24
25	0.72186	6.0183	21.311	-0.00060	0.4421	0.1350	4.4289	2.9588	17.807	0.38358	0.5221	25
26	0.73406	6.1200	23.249	-0.00058	0.4875	0.1516	4.9133	2.6671	16.323	0.38294	0.5207	26
27	0.74985	6.2516	11.218	-0.00073	0.1950	0.0589	2.4218	5.4109	33.827	0.27199	0.4214	27
28	0.75353	6.2823	13.396	-0.00069	0.2267	0.0712	2.9062	4.5091	28.328	0.30142	0.4406	28
29	0.78349	6.5321	12.884	-0.00066	0.2105	0.0729	2.9062	4.5091	29.454	0.29084	0.4331	29
30	0.77394	6.4525	15.217	-0.00062	0.2352	0.0866	3.3906	3.8650	24.939	0.31989	0.4403	30
31	-	-	-	-	0.0865	0.0208	0.9687	13.527	-	0.35897	-	31
32	0.52265	4.3574	9.6570	-0.00169	0.1407	0.0324	1.4531	9.0182	39.296	0.35759	0.5729	32
33	0.60046	5.0062	11.207	-0.00112	0.1923	0.0442	1.9375	6.7637	33.860	0.35613	0.5370	33
34	0.62754	5.2319	10.724	-0.00102	0.2056	0.0461	1.9375	6.7637	35.387	0.33368	0.5280	34
35	0.61017	5.0871	11.029	-0.00106	0.2035	0.0464	1.9375	6.7637	34.408	0.36630	0.5293	35
36	0.60066	5.0078	11.204	-0.00113	0.1995	0.0442	1.9375	6.7637	33.871	0.36689	0.5480	36
37	0.64600	5.3859	13.022	-0.00092	0.2314	0.0575	2.4218	5.4109	29.143	0.36017	0.5191	37
38	0.65773	5.4836	9.8640	-0.00094	0.1715	0.0468	1.8679	7.0158	38.472	0.34433	0.5411	38
39	0.62718	5.2289	10.345	-0.00109	0.1887	0.0438	1.8679	7.0158	36.685	0.34316	0.5356	39
40	0.68606	5.7199	11.909	-0.00083	0.2149	0.0563	2.3522	5.5711	31.866	0.35092	0.5193	40
41	-	-	-	-	0.1976	0.0218	0.8991	14.575	-	0.39647	-	41
42	0.88458	7.3749	10.592	-0.00067	0.2092	0.0685	2.6974	4.8582	35.829	0.24266	0.4098	42
43	0.87182	7.2686	12.676	-0.00059	0.2637	0.0883	3.1817	4.1186	29.937	0.26014	0.4006	43
44	0.87169	7.2674	14.608	-0.00056	0.3026	0.1084	3.6661	3.5745	25.977	0.27833	0.4113	44
45	0.88453	7.3745	14.396	-0.00052	0.3118	0.1135	3.6661	3.5745	26.360	0.29052	0.4163	45
46	0.86882	7.2435	14.657	-0.00055	0.3255	0.1121	3.6661	3.5745	25.892	0.27480	0.4040	46
47	0.86557	7.2164	14.712	-0.00055	0.3211	0.1116	3.6661	3.5745	25.795	0.27506	0.4023	47
48	0.91088	7.5942	13.714	-0.00056	0.2453	0.1071	3.5965	3.6437	27.671	0.26320	0.4119	48
49	0.86655	7.2246	16.636	-0.00055	0.3256	0.1247	4.1505	3.1573	22.811	0.30697	0.4204	49
50	0.79626	6.6386	4.8266	-0.00066	0.5649	0.0807	1.1065	11.843	78.624	0.32504	0.5918	50
51	0.79402	6.6199	6.9590	-0.00060	0.6446	0.1000	1.5908	8.2374	54.531	0.33176	0.5640	51
52	0.79265	6.6085	4.2385	-	0.0510	0.0052	0.9672	13.548	89.533	0.24738	-	52
53	0.82203	6.8534	6.4216	-0.00801	0.2239	0.0195	1.5197	8.6228	59.095	0.19875	-	53
54	0.80269	6.6922	5.0928	-0.00170	0.1010	0.0242	1.1769	11.135	74.514	0.23811	0.5191	54
55	1.39241	11.609	5.5186	-0.00110	0.2570	0.0358	2.2123	5.9235	68.764	0.14735	0.3293	55
56	0.61730	5.1466	3.3091	-0.00132	0.2560	0.0284	0.5881	22.283	114.68	0.49679	1.1256	56
57	0.87603	7.3036	3.9649	-	-	0.00523	1.00000	13.104	95.710	0.23992	-	57
58	0.07087	0.5908	3.4120	-	-0.2140	-	0.06961	188.25	111.22	3.4027	-	58
59	1.14230	9.5236	3.3599	-	0.0222	0.0072	1.1050	11.859	112.94	0.21894	-	59
60	0.80687	6.7270	4.1643	-	0.0372	0.00442	0.9674	13.547	91.128	0.24829	-	60
61	1.4241	11.873	5.9720	-	0.0722	0.0300	2.4485	5.3520	63.544	0.11365	-	61
62	1.00000	8.3372	2.1608	-0.00009	0.3443	0.05557	0.62210	21.0646	175.620	0.44476	1.0003	62
63	0.12486	1.0409	3.8452	-	-0.3820	-	0.1382	94.810	98.692	1.2404	-	63
64	0.8512	7.097	5.1375	-0.00169	0.1269	0.0202	1.259	10.41	73.9	0.19033	-	64

FIG. 23-2 (Cont'd)

Physical Constants

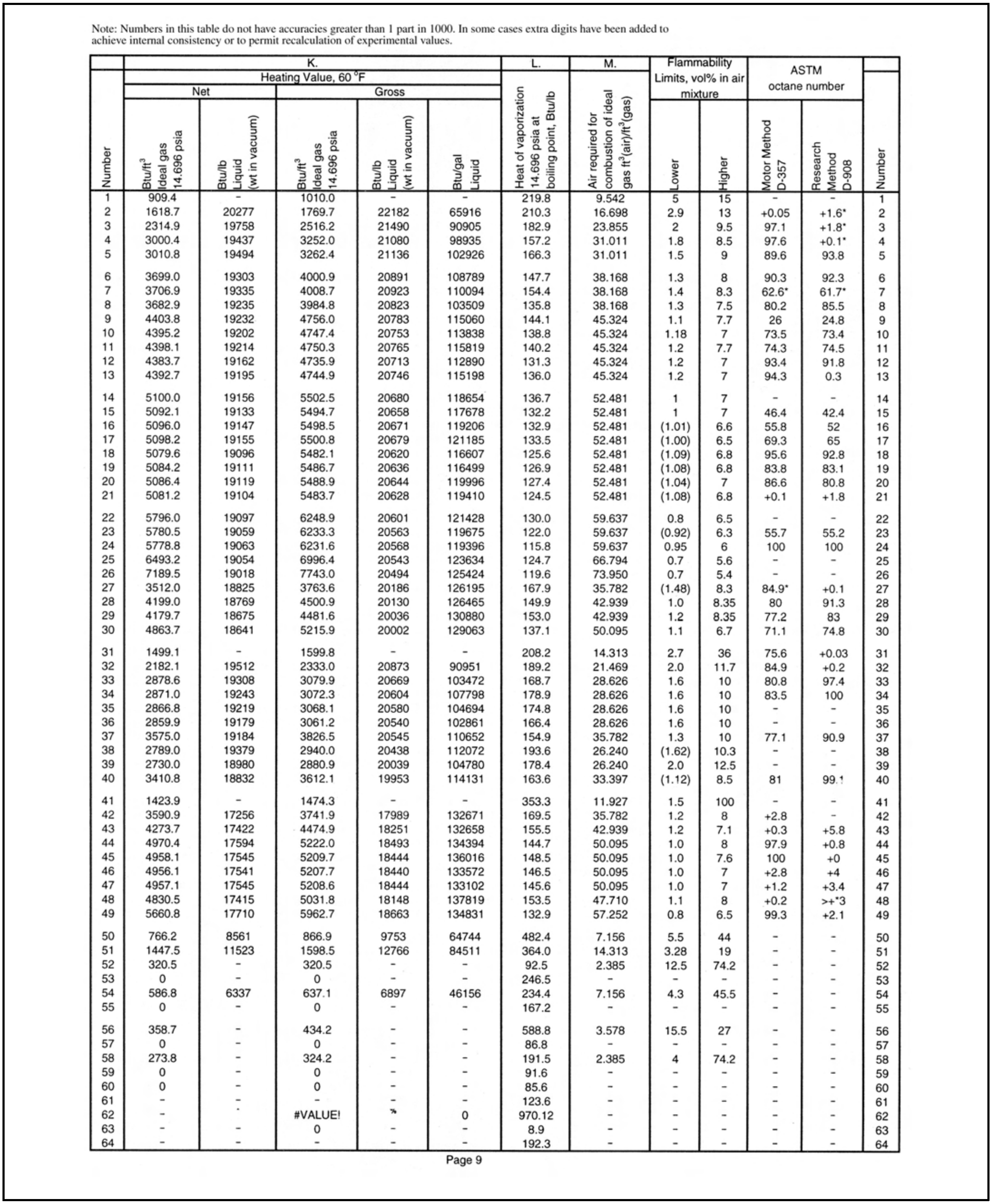

Note: Numbers in this table do not have accuracies greater than 1 part in 1000. In some cases extra digits have been added to achieve internal consistency or to permit recalculation of experimental values.

	K.					L.	M.	Flammability Limits, vol% in air mixture		ASTM octane number		
	Heating Value, 60 °F											
	Net		Gross									
Number	Btu/ft^3 Ideal gas 14.696 psia	Btu/lb Liquid (wt in vacuum)	Btu/ft^3 Ideal gas 14.696 psia	Btu/lb Liquid (wt in vacuum)	Btu/gal Liquid	Heat of vaporization 14.696 psia at boiling point, Btu/lb	Air required for combustion of ideal gas $ft^3(air)/ft^3(gas)$	Lower	Higher	Motor Method D-357	Research Method D-908	Number
1	909.4	-	1010.0	-	-	219.8	9.542	5	15	-	-	1
2	1618.7	20277	1769.7	22182	65916	210.3	16.698	2.9	13	+0.05	+1.6*	2
3	2314.9	19758	2516.2	21490	90905	182.9	23.855	2	9.5	97.1	+1.8*	3
4	3000.4	19437	3252.0	21080	98935	157.2	31.011	1.8	8.5	97.6	+0.1*	4
5	3010.8	19494	3262.4	21136	102926	166.3	31.011	1.5	9	89.6	93.8	5
6	3699.0	19303	4000.9	20891	108789	147.7	38.168	1.3	8	90.3	92.3	6
7	3706.9	19335	4008.7	20923	110094	154.4	38.168	1.4	8.3	62.6*	61.7*	7
8	3682.9	19235	3984.8	20823	103509	135.8	38.168	1.3	7.5	80.2	85.5	8
9	4403.8	19232	4756.0	20783	115060	144.1	45.324	1.1	7.7	26	24.8	9
10	4395.2	19202	4747.4	20753	113838	138.8	45.324	1.18	7	73.5	73.4	10
11	4398.1	19214	4750.3	20765	115819	140.2	45.324	1.2	7.7	74.3	74.5	11
12	4383.7	19162	4735.9	20713	112890	131.3	45.324	1.2	7	93.4	91.8	12
13	4392.7	19195	4744.9	20746	115198	136.0	45.324	1.2	7	94.3	0.3	13
14	5100.0	19156	5502.5	20680	118654	136.7	52.481	1	7	-	-	14
15	5092.1	19133	5494.7	20658	117678	132.2	52.481	1	7	46.4	42.4	15
16	5096.0	19147	5498.5	20671	119206	132.9	52.481	(1.01)	6.6	55.8	52	16
17	5098.2	19155	5500.8	20679	121185	133.5	52.481	(1.00)	6.5	69.3	65	17
18	5079.6	19096	5482.1	20620	116607	125.6	52.481	(1.09)	6.8	95.6	92.8	18
19	5084.2	19111	5486.7	20636	116499	126.9	52.481	(1.08)	6.8	83.8	83.1	19
20	5086.4	19119	5488.9	20644	119996	127.4	52.481	(1.04)	7	86.6	80.8	20
21	5081.2	19104	5483.7	20628	119410	124.5	52.481	(1.08)	6.8	+0.1	+1.8	21
22	5796.0	19097	6248.9	20601	121428	130.0	59.637	0.8	6.5	-	-	22
23	5780.5	19059	6233.3	20563	119675	122.0	59.637	(0.92)	6.3	55.7	55.2	23
24	5778.8	19063	6231.6	20568	119396	115.8	59.637	0.95	6	100	100	24
25	6493.2	19054	6996.4	20543	123634	124.7	66.794	0.7	5.6	-	-	25
26	7189.5	19018	7743.0	20494	125424	119.6	73.950	0.7	5.4	-	-	26
27	3512.0	18825	3763.6	20186	126195	167.9	35.782	(1.48)	8.3	84.9*	+0.1	27
28	4199.0	18769	4500.9	20130	126465	149.9	42.939	1.0	8.35	80	91.3	28
29	4179.7	18675	4481.6	20036	130880	153.0	42.939	1.2	8.35	77.2	83	29
30	4863.7	18641	5215.9	20002	129063	137.1	50.095	1.1	6.7	71.1	74.8	30
31	1499.1	-	1599.8	-	-	208.2	14.313	2.7	36	75.6	+0.03	31
32	2182.1	19512	2333.0	20873	90951	189.2	21.469	2.0	11.7	84.9	+0.2	32
33	2878.6	19308	3079.9	20669	103472	168.7	28.626	1.6	10	80.8	97.4	33
34	2871.0	19243	3072.3	20604	107798	178.9	28.626	1.6	10	83.5	100	34
35	2866.8	19219	3068.1	20580	104694	174.8	28.626	1.6	10	-	-	35
36	2859.9	19179	3061.2	20540	102861	166.4	28.626	1.6	10	-	-	36
37	3575.0	19184	3826.5	20545	110652	154.9	35.782	1.3	10	77.1	90.9	37
38	2789.0	19379	2940.0	20438	112072	193.6	26.240	(1.62)	10.3	-	-	38
39	2730.0	18980	2880.9	20039	104780	178.4	26.240	2.0	12.5	-	-	39
40	3410.8	18832	3612.1	19953	114131	163.6	33.397	(1.12)	8.5	81	99.1	40
41	1423.9	-	1474.3	-	-	353.3	11.927	1.5	100	-	-	41
42	3590.9	17256	3741.9	17989	132671	169.5	35.782	1.2	8	+2.8	-	42
43	4273.7	17422	4474.9	18251	132658	155.5	42.939	1.2	7.1	+0.3	+5.8	43
44	4970.4	17594	5222.0	18493	134394	144.7	50.095	1.0	8	97.9	+0.8	44
45	4958.1	17545	5209.7	18444	136016	148.5	50.095	1.0	7.6	100	+0	45
46	4956.1	17541	5207.7	18440	133572	146.5	50.095	1.0	7	+2.8	+4	46
47	4957.1	17545	5208.6	18444	133102	145.6	50.095	1.0	7	+1.2	+3.4	47
48	4830.5	17415	5031.8	18148	137819	153.5	47.710	1.1	8	+0.2	>+*3	48
49	5660.8	17710	5962.7	18663	134831	132.9	57.252	0.8	6.5	99.3	+2.1	49
50	766.2	8561	866.9	9753	64744	482.4	7.156	5.5	44	-	-	50
51	1447.5	11523	1598.5	12766	84511	364.0	14.313	3.28	19	-	-	51
52	320.5	-	320.5	-	-	92.5	2.385	12.5	74.2	-	-	52
53	0	-	0	-	-	246.5	-	-	-	-	-	53
54	586.8	6337	637.1	6897	46156	234.4	7.156	4.3	45.5	-	-	54
55	0	-	0	-	-	167.2	-	-	-	-	-	55
56	358.7	-	434.2	-	-	588.8	3.578	15.5	27	-	-	56
57	0	-	0	-	-	86.8	-	-	-	-	-	57
58	273.8	-	324.2	-	-	191.5	2.385	4	74.2	-	-	58
59	0	-	0	-	-	91.6	-	-	-	-	-	59
60	0	-	0	-	-	85.6	-	-	-	-	-	60
61	-	-	-	-	-	123.6	-	-	-	-	-	61
62	-	-	#VALUE!	%	0	970.12	-	-	-	-	-	62
63	-	-	0	-	-	8.9	-	-	-	-	-	63
64	-	-	-	-	-	192.3	-	-	-	-	-	64

FIG. 23-2 (Cont'd)

Notes and References for the Table of Physical Constants

Note: Numbers in this table do not have accuracies greater than 1 part in 1000. In some cases extra digits have been added to achieve internal consistency or to permit recalculation of experimental values.

	See Note No. →		A.	B.		C.	D.				
								Critical Constants			
Number	Compound	Formula	Molar Mass (Molecular Weight)	Boiling Point, °F 14.696 psia	Vapor Pressure, psia, 100 °F	Freezing Point, °F 14.696 psia(abs)	Refractive Index 60 °F	Pressure, psia (abs)	Temperature, °F	Volume, ft^3/lb	Number
1	Methane	CH_4	1	b	e, f	2, g	2, h	2	2	2	1
2	Ethane	C_2H_6	1	b	e, f	2, g	2, g	2	2	2	2
3	Propane	C_3H_8	1	b	b	2, g	2, g	2	2	2	3
4	Isobutane	C_4H_{10}	1	b	b	2	2, g	2	2	2	4
5	n-Butane	C_4H_{10}	1	b	b	2	2, g	2	2	2	5
6	Isopentane	C_5H_{12}	1	b	b	2	2	2	2	2	6
7	n-Pentane	C_5H_{12}	1	b	b	2	2	2	2	2	7
8	Neopentane	C_5H_{12}	1	b	b	2	2, g	2	2	2	8
9	n-Hexane	C_6H_{14}	1	b	b	2	2	2	2	2	9
10	2-Methylpentane	C_6H_{14}	1	b	b	2	2	2	2	2	10
11	3-Methylpentane	C_6H_{14}	1	b	b	2	2	2	2	2	11
12	Neohexane	C_6H_{14}	1	b	b	2	2	2	2	2	12
13	2,3-Dimethylbutane	C_6H_{14}	1	b	b	2	2	2	2	2	13
14	n-Heptane	C_7H_{16}	1	b	b	2	2	2	2	2	14
15	2-Methylhexane	C_7H_{16}	1	b	b	2	2	2	2	2	15
16	3-Methylhexane	C_7H_{16}	1	b	b	2	2	2	2	2	16
17	3-Ethylpentane	C_7H_{16}	1	b	b	2	2	2	2	2	17
18	2,2-Dimethylpentane	C_7H_{16}	1	b	b	2	2	2	2	2	18
19	2,4-Dimethylpentane	C_7H_{16}	1	b	b	2	2	2	2	2	19
20	3,3-Dimethylpentane	C_7H_{16}	1	b	b	2	2	2	2	2	20
21	Triptane	C_7H_{16}	1	b	b	2	2	2	2	2	21
22	n-Octane	C_8H_{18}	1	b	b	2	2	2	2	2	22
23	Diisobutyl	C_8H_{18}	1	b	b	2	2	2	2	2	23
24	Isooctane	C_8H_{18}	1	b	b	2	2	2	2	2	24
25	n-Nonane	C_9H_{20}	1	b	b	2	2	2	2	2	25
26	n-Decane	$C_{10}H_{22}$	1	b	b	2	2	2	2	2	26
27	Cyclopentane	C_5H_{10}	1	b	b	2	2	2	2	2	27
28	Methylcyclopentane	C_6H_{12}	1	b	b	2	2	2	2	2	28
29	Cyclohexane	C_6H_{12}	1	b	b	2	2	2	2	2	29
30	Methylcyclohexane	C_7H_{14}	1	b	b	2	2	2	2	2	30
31	Ethene(Ethylene)	C_2H_4	1	b	e, f	2	7, g	2	2	2	31
32	Propene(Propylene)	C_3H_6	1	b	b	2	2, g	2	2	2	32
33	1-Butene(Butylene)	C_4H_8	1	b	b	2	2, g	2	2	2	33
34	cis-2-Butene	C_4H_8	1	b	b	2	2, g	2	2	2	34
35	trans-2-Butene	C_4H_8	1	b	b	2	2, g	2	2	2	35
36	Isobutene	C_4H_8	1	b	b	2	2, g	2	2	2	36
37	1-Pentene	C_5H_{10}	1	b	b	2	2	2	2	2	37
38	1,2-Butadiene	C_4H_6	1	b	b	2	2	2	2	2	38
39	1,3-Butadiene	C_4H_6	1	b	b	2	2	2	2	2	39
40	Isoprene	C_5H_8	1	b	b	2	2	2	2	2	40
41	Acetylene	C_2H_2	1	b	f	2		2	2	2	41
42	Benzene	C_6H_6	1	b	b	2	2	2	2	2	42
43	Toluene	C_7H_8	1	b	b	2	2	2	2	2	43
44	Ethylbenzene	C_8H_{10}	1	b	b	2	2	2	2	2	44
45	o-Xylene	C_8H_{10}	1	b	b	2	2	2	2	2	45
46	m-Xylene	C_8H_{10}	1	b	b	2	2	2	2	2	46
47	p-Xylene	C_8H_{10}	1	b	b	2	2	2	2	2	47
48	Styrene	C_8H_8	1	b	b	2	2	i	i	i	48
49	Isopropylbenzene	C_9H_{12}	1	b	b	2	2	2	2	2	49
50	Methyl alcohol	CH_4O	1	b	b	2	2	2	2	2	50
51	Ethyl alcohol	C_2H_6O	1	b	b	2	2	2	2	2	51
52	Carbon monoxide	CO	1	c	f	c, g	2, h	c	c	c	52
53	Carbon dioxide	CO_2	1	c,d	f	c, g	2, h	c	c	c	53
54	Hydrogen sulfide	H_2S	1	c	c	c, g	2, h	c	c	c	54
55	Sulfur dioxide	SO_2	1	c	c	c, g	2, h	c	c	c	55
56	Ammonia	NH_3	1	c	c	c, g	2, h	c	c	c	56
57	Air		1	c	f		2, h	c	c	c	57
58	Hydrogen	H_2	1	c	f	c, g	2, h	c	c	c	58
59	Oxygen	O_2	1	c	f	c, g	2, h	c	c	c	59
60	Nitrogen	N_2	1	c	f	c, g	2, h	c	c	c	60
61	Chlorine	Cl_2	1	4	4	2	2, g	2	2	2	61
62	Water	H_2O	1	5	5	5	2	5	5	5	62
63	Helium	He	1	c	f	c, g	2, h	c	c	c	63
64	Hydrogen chloride	HCl	1	b	6	2	2, h	2	2	2	64

June-02

FIG. 23-2 (Cont'd)

Notes and References for the Table of Physical Constants

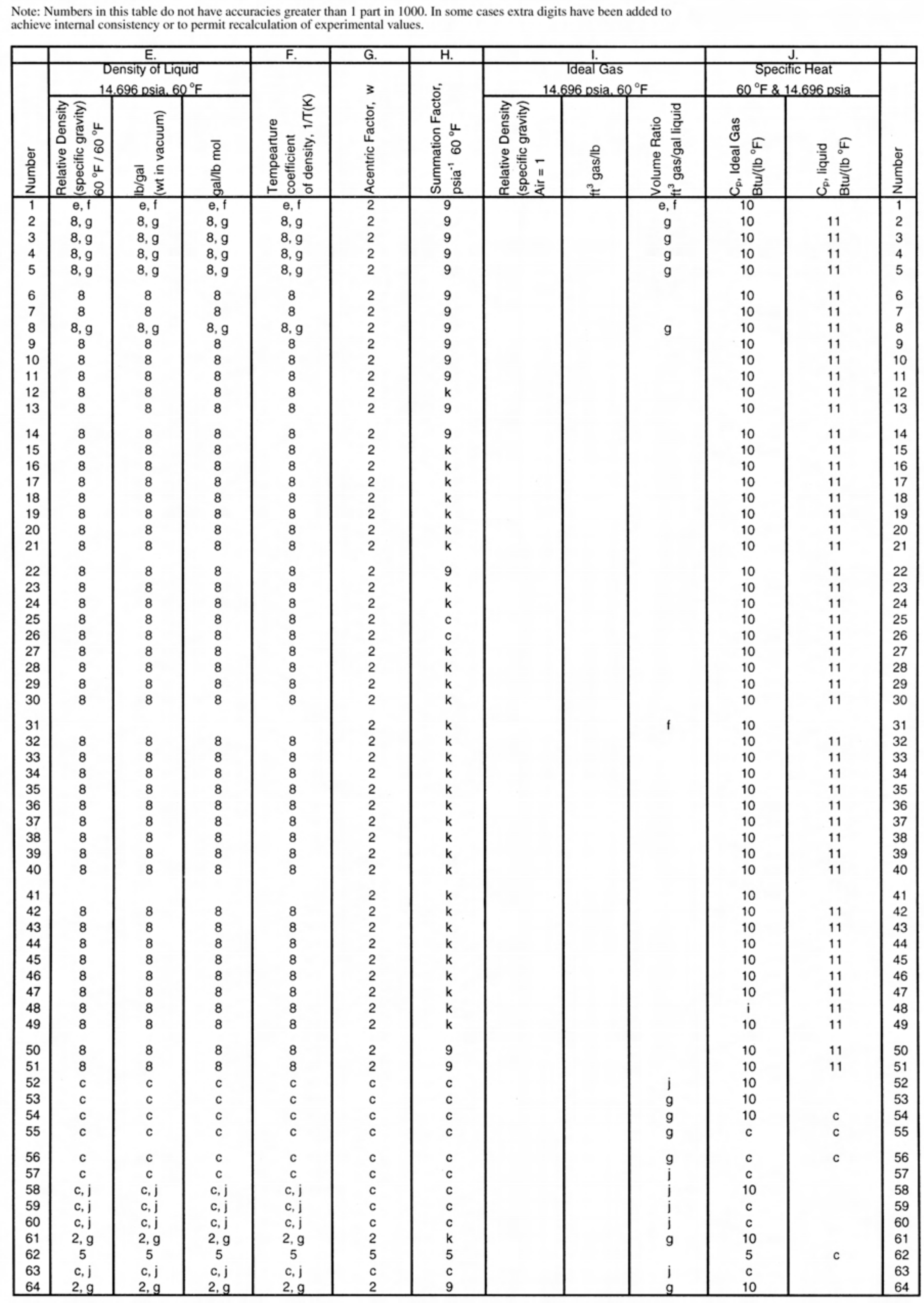

Note: Numbers in this table do not have accuracies greater than 1 part in 1000. In some cases extra digits have been added to achieve internal consistency or to permit recalculation of experimental values.

	E.			F.	G.	H.	I.			J.		
	Density of Liquid 14.696 psia, 60 °F						Ideal Gas 14.696 psia, 60 °F			Specific Heat 60 °F & 14.696 psia		
Number	Relative Density (specific gravity) 60 °F / 60 °F	lb/gal (wt in vacuum)	gal/lb mol	Tempearture coefficient of density, 1/T(K)	Acentric Factor, w	Summation Factor, $psia^{-1}$ 60 °F	Relative Density (specific gravity) Air = 1	ft^3 gas/lb	Volume Ratio ft^3 gas/gal liquid	C_p, Ideal Gas Btu/(lb °F)	C_p, liquid Btu/(lb °F)	Number
1	e, f	e, f	e, f	e, f	2	9			e, f	10		1
2	8, g	8, g	8, g	8, g	2	9			g	10	11	2
3	8, g	8, g	8, g	8, g	2	9			g	10	11	3
4	8, g	8, g	8, g	8, g	2	9			g	10	11	4
5	8, g	8, g	8, g	8, g	2	9			g	10	11	5
6	8	8	8	8	2	9				10	11	6
7	8	8	8	8	2	9				10	11	7
8	8, g	8, g	8, g	8, g	2	9			g	10	11	8
9	8	8	8	8	2	9				10	11	9
10	8	8	8	8	2	9				10	11	10
11	8	8	8	8	2	9				10	11	11
12	8	8	8	8	2	k				10	11	12
13	8	8	8	8	2	9				10	11	13
14	8	8	8	8	2	9				10	11	14
15	8	8	8	8	2	k				10	11	15
16	8	8	8	8	2	k				10	11	16
17	8	8	8	8	2	k				10	11	17
18	8	8	8	8	2	k				10	11	18
19	8	8	8	8	2	k				10	11	19
20	8	8	8	8	2	k				10	11	20
21	8	8	8	8	2	k				10	11	21
22	8	8	8	8	2	9				10	11	22
23	8	8	8	8	2	k				10	11	23
24	8	8	8	8	2	k				10	11	24
25	8	8	8	8	2	c				10	11	25
26	8	8	8	8	2	c				10	11	26
27	8	8	8	8	2	k				10	11	27
28	8	8	8	8	2	k				10	11	28
29	8	8	8	8	2	k				10	11	29
30	8	8	8	8	2	k				10	11	30
31					2	k			f	10		31
32	8	8	8	8	2	k				10	11	32
33	8	8	8	8	2	k				10	11	33
34	8	8	8	8	2	k				10	11	34
35	8	8	8	8	2	k				10	11	35
36	8	8	8	8	2	k				10	11	36
37	8	8	8	8	2	k				10	11	37
38	8	8	8	8	2	k				10	11	38
39	8	8	8	8	2	k				10	11	39
40	8	8	8	8	2	k				10	11	40
41					2	k				10		41
42	8	8	8	8	2	k				10	11	42
43	8	8	8	8	2	k				10	11	43
44	8	8	8	8	2	k				10	11	44
45	8	8	8	8	2	k				10	11	45
46	8	8	8	8	2	k				10	11	46
47	8	8	8	8	2	k				10	11	47
48	8	8	8	8	2	k				i	11	48
49	8	8	8	8	2	k				10	11	49
50	8	8	8	8	2	9				10	11	50
51	8	8	8	8	2	9				10	11	51
52	c	c	c	c	c	c			j	10		52
53	c	c	c	c	c	c			g	10		53
54	c	c	c	c	c	c			g	10	c	54
55	c	c	c	c	c	c			g	c	c	55
56	c	c	c	c	c	c			g	c	c	56
57	c	c	c	c	c	c			j	c		57
58	c, j	c, j	c, j	c, j	c	c			j	10		58
59	c, j	c, j	c, j	c, j	c	c			j	c		59
60	c, j	c, j	c, j	c, j	c	c			j	c		60
61	2, g	2, g	2, g	2, g	2	k			g	10		61
62	5	5	5	5	5	5				5	c	62
63	c, j	c, j	c, j	c, j	c	c			j	c		63
64	2, g	2, g	2, g	2, g	2	9			g	10		64

FIG. 23-2 (Cont'd)

Notes and References for the Table of Physical Constants

Note: Numbers in this table do not have accuracies greater than 1 part in 1000. In some cases extra digits have been added to achieve internal consistency or to permit recalculation of experimental values.

	K.					L.	M.	Flammability Limits, vol% in air mixture		ASTM octane number		
	Heating Value, 60 °F											
	Net		Gross									
Number	Btu/ft^3 Ideal gas 14.696 psia	Btu/lb Liquid (wt in vacuum)	Btu/ft^3 Ideal gas 14.696 psia	Btu/lb Liquid (wt in vacuum)	Btu/gal Liquid	Heat of vaporization 14.696 psia at boiling point, Btu/lb	Air required for combustion of ideal gas $ft^3(air)/ft^3(gas)$	Lower	Higher	Motor Method D-357	Research Method D-908	Number
1	2	f	2	f	f	b, 8, 9		l	l	–	–	1
2	2	2, g	2	2, g	2, g	b, 8, 9		l	l	13	13	2
3	2	2, g	2	2, g	2, g	b, 8, 9		l	l	13	13	3
4	2	2, g	2	2, g	2, g	b, 8, 9		l	l	13	13	4
5	2	2, g	2	2, g	2, g	b, 8, 9		l	l	13	13	5
6	2	2	2	2	2	b, 8, 9		l	l	13	13	6
7	2	2	2	2	2	b, 8, 9		l	l	13	13	7
8	2	2, g	2	2, g	2, g	b, 8, 9		l	l	13	13	8
9	2	2	2	2	2	b, 8, 9		l	l	13	13	9
10	2	2	2	2	2	b, 8, 9		l	l	13	13	10
11	2	2	2	2	2	b, 8, 9		l	l	13	13	11
12	2	2	2	2	2	b, 8, k		l	l	13	13	12
13	2	2	2	2	2	b, 8, 9		l	l	13	13	13
14	2	2	2	2	2	b, 8, 9		l	l	–	–	14
15	2	2	2	2	2	b, 8, k		l	l	13	13	15
16	2	2	2	2	2	b, 8, k		l, i	l, i	13	13	16
17	2	2	2	2	2	b, 8, k		l, i	l, i	13	13	17
18	2	2	2	2	2	b, 8, k		l, i	l, i	13	13	18
19	2	2	2	2	2	b, 8, k		l, i	l, i	13	13	19
20	2	2	2	2	2	b, 8, k		l, i	l, i	13	13	20
21	2	2	2	2	2	b, 8, k		l, i	l, i	13	13	21
22	2	2	2	2	2	b, 8, 9		l	l	–	–	22
23	2	2	2	2	2	b, 8, k		l, i	l, i	13	13	23
24	2	2	2	2	2	b, 8, k		l	l	13	13	24
25	2	2	2	2	2	b, 8, c		l	l	–	–	25
26	2	2	2	2	2	b, 8, c		l	l	–	–	26
27	2	2	2	2	2	b, 8, k		l, i	l, i	13	13	27
28	2	2	2	2	2	b, 8, k		l	l	13	13	28
29	2	2	2	2	2	b, 8, k		l	l	13	13	29
30	2	2	2	2	2	b, 8, k		l	l	13	13	30
31	2	f	2	f	f	b, 8, k		l	l	13	13	31
32	2	2, g	2	2, g	2, g	b, 8, k		l	l	13	13	32
33	2	2, g	2	2, g	2, g	b, 8, k		l	l	13	13	33
34	2	2, g	2	2, g	2, g	b, 8, k		l	l	13	13	34
35	2	2, g	2	2, g	2, g	b, 8, k		l	l	–	–	35
36	2	2, g	2	2, g	2, g	b, 8, k		l	l	–	–	36
37	2	2	2	2	2	b, 8, k		l	l	13	13	37
38	2	2, g	2	2, g	2, g	b, 8, k		l, i	l, i	–	–	38
39	2	2, g	2	2, g	2, g	b, 8, k		l	l	–	–	39
40	2	2	2	2	2	b, 8, k		l, i	l, i	13	13	40
41	2	f	2	f	f	b, 8, k		l	l	–	–	41
42	2	2	2	2	2	b, 8, k		l	l	13	–	42
43	2	2	2	2	2	b, 8, k		l	l	13	13	43
44	2	2	2	2	2	b, 8, k		l	l	13	13	44
45	2	2	2	2	2	b, 8, k		l	l	13	13	45
46	2	2	2	2	2	b, 8, k		l	l	13	13	46
47	2	2	2	2	2	b, 8, k		l	l	13	13	47
48	2	2	2	2	2	b, 8, k		l	l	13	13	48
49	2	2	2	2	2	b, 8, k		l	l	13	13	49
50	2	2	2	2	2	b, 8, 9		l	l	–	–	50
51	2	2	2	2	2	b, 8, 9		l	l	–	–	51
52	2	2, g	2	2, g	2, g	c		l	l	–	–	52
53						b, d				–	–	53
54	2	2	2	2	2	c		l	l	–	–	54
55						c				–	–	55
56						c		l	l	–	–	56
57						c				–	–	57
58						c		l	l	–	–	58
59						c				–	–	59
60						c				–	–	60
61						b, 8, k				–	–	61
62			5			5				–	–	62
63						c				–	–	63
64						b, 8, 9				–	–	64

FIG. 23-2 (Cont'd)

Notes for the Table of Physical Constants

a The molar mass for air is based upon the following composition expressed in mole fraction: N2(g), 0.7812; O2(g), 0.2096; Ar(g), 0.0092.

b Calculated with the evaluated vapor-pressure equation in the TRC Table Database (Reference 2)

c NIST REFPROP Database: Reference Fluid Thermodynamic and Transport Properties (Reference 3)

d Sublimation point

e Estimated for the hypothetical liquid state

f Temperature is above the critical temperature

g At saturation pressure

h Refractive index of the gas

i Estimated value

j Densities of the liquid at the normal boiling temperature

k Estimated 2nd virial coefficients with a corresponding-states correlation

l Extreme values of those reported in reference 12

Column definitions and general notes

A Molar mass (molecular weight) is based upon the following atomic weights: C =12.0107; H = 1.00794; O = 15.9994; N = 14.00674; S = 32.066; Cl = 35.4527; He = 4.002602; and Ar = 39.948.

B Boiling point: the temperature corresponding to equilibrium between the liquid and vapor phases at 101.325 kPa (or 14.696 psia).

C Freezing point: the temperature corresponding to equilibrium between the crystal phase and the air-saturated liquid at 101.325 kPa (or 14.696 psia).

D The refractive index values represent those determined with light of wavelength corresponding to the sodium D-line (589.26 nm).

E The specific gravities of water used in the relative density calculations were 8.3372 lb/gal at 60 °F and 999.103 $kg \cdot m^{-3}$ at 15 °C. These values are included in the FPS and SI tables.

F The temperature coefficient of densityis related to the expansion coefficient by: $(\partial r/\partial T)_p/r = -(\partial V/\partial T)_p/V$ in units of 1/T.

G Pitzer acentric factor: $w = -\log_{10}(p/p_c)^{-1}$, where p is at T = 0.7 T_c.

H The summation factor is $(-B/RT)^{0.5}$ where B is the second virial coefficient evaluated at temperature T and R is the gas constant. T = 15 °C for SI units and T = 60 °F for FPS units.

I The density of an ideal gas relative to air is calculated by dividing the molar mass of the gas by the average molar mass of air given in the table. The specific volume of an ideal gas is calculated from the ideal-gas equation.

J The heat capacity values for the liquid phase are not rigorously C_p, but rather are along the saturation line C_{sat} defined by: $C_{sat} = C_p - T(\partial V/\partial T)_p(\partial p/\partial T)_s$. For liquids far from the critical temperature, C_{sat} and C_p are nearly equal.

K The heating value is the negative of the enthalpy of combustion at 15 °C (or 60 °F) and 101.325 kPa (or 14.696 psia) in an ideal reaction (one where all of the gasses are ideal). For an arbitrary organic compound, the combustion reaction is:

$C_nH_mO_hS_jN_k$(s, l, or g) + (n + m/4 - h/2 + j) O_2(g) ® n CO_2(g) + m/2 H_2O(g or l) + k/2 N_2(g) + j SO_2(g),

where s, l, and g denote the phase of compound. For "gross" heating values, the water formed is liquid; for "net" heating values, the water formed is ideal gas. Values reported are on a dry basis. To account for water in the heating value, see GPA 2172. The phase of the material combusted is indicated in the column headings.

L The heat of vaporization is the enthalpy of the saturated vapor minus the enthalpy of the saturated liquid at the boiling temperature.

M Air required for the combustion of ideal gas for compounds of formula $C_nH_mO_hS_jN_k$ is: V(air)/V(gas) = (n + m/4 -h/2 +j) / 0.2096.

Units and conversion factors

- Reported units are based upon the following units (SI) with their equivalent corresponding FPS units:
- mass: 453.59237 g = 1 Pound(avdp), lbm
- length: 0.3048 meters = 1 foot, ft
- temperature: 1.8(t / °C) = (t / °F) - 32; 0 °C = 273.15 K. All temperatures are defined by the International Temperature Scales of 1990 (ITS-90).
- volume: 0.02831685 m^3 = 1 cubic foot, ft^3
- pressure: 6.894757 kPa = 1 pound per square inch absolute, psia
- energy: 1055.056 J = 1 British thermal unit, Btu
- Gas constant R = 8.314472 $J \cdot K^{-1} \cdot mol^{-1}$ or 10.7316 psia $ft^3/(lbmol \cdot {}^{\circ}R)$
- 1 gal = 231 in^3
- 1 atm = 14.69595 psia = 760 torr = 101.325 kPa

FIG. 23-2 (Cont'd)

References for the Table of Physical Constants

1. Coursey, J. S. and Dragoset, R. A. (2001). Atomic Weights and Isotopic Compositions (version 2.2.1), [Online]. Available: http://physics.nist.gov/Comp [2002, February 13]. National Institute of Standards and Technology, Gaithersburg, MD. Originally published as R.D. Vocke, Jr., Atomic Weights of the Elements 1997, Pure Appl. Chem., 71(8), 1593 (1999)
2. X. Yan, Q. Dong, X. Hong, and M. Frenkel, NIST/TRC Table Database, NIST Standard Reference Database 85, Version 2002. NIST Standard Reference Data Program, Gaithersburg, MD.
3. E. W. Lemmon and M. O. McLinden, Reference Fluid and Thermodynamic and Transport Properties (REFPROP), NIST Standard Reference Database 23, Version 7, Beta Version, February 5, 2002. NIST Standard Reference Data Program, Gaithersburg, MD.
4. Ambrose, D.; Hall, D. J.; Lee, D. A.; Lewis, G. B. J. Chem. Thermodyn., 1978, 11, 1089.
5. A.H. Harvey, A.P. Peskin, and S.A. Klein, NIST/ASME Steam Properties, NIST Standard Reference Database 10, Version 2.2, NIST Standard Reference Data Program, Gaithersburg, MD (2000);

   and

   W. Wagner and A. Pruss, "The IAPWS Formulation 1995 for the Thermodynamic Properties of Ordinary Water Substance for General and Scientific Use," J. Phys. Chem. Ref. Data, in press (2002).
6. Henderson, C.; Lewis, D. G.; Prichard, P. C.; Staveley, L. A. K.; Fonseca, I. M. A.; Lobo, L. Q. J. Chem. Thermodyn. 1986, 18, 1077.
7. Francis, A. W. J. Chem. Eng. Data, 1960, 5, 534.
8. Wilhoit, R. C.; Marsh, K. N.; Hong, X.; Gadalla, N.; Frenkel, M.; "Thermodynamic Properties of Organic Compounds and their Mixtures; Densities of Aliphatic Hydrocarbons: Alkanes," Group IV, Volume 8, Subvolume B: Landolt-Börnstein, 1996.
9. Dymond, J. H.; Marsh, K. N.; Wilhoit, R. C.; Wong, K. C.; "The Virial Coefficients of Pure Gases and Mixtures; Virial Coefficients of Pure Gases," Group IV, Volume 21, Subvolume A: Landolt-Börnstein, 2002. In Press.
10. Frenkel, M.; Kabo, G. J.; Marsh, K. N.; Roganov, G. N.; Wilhoit, R. C.; "Thermodynamics of Organic Compounds in the Gas State, Vol. I & II," TRC Data Series, 1994.
11. Zabransky, M.; Ruzicka, V.; Majer, V.; Domalski, E. S.; "Heat Capacity of Liquids," J. Phys. Chem. Ref. Data, Monograph 6, ACS/AIP, 1996.
12. En.gineering Sciences Data Unit, "Fire Hazard Properties: Flash Points, Flammability Limits and Autoignition Temperatures," ESDU 82030, September 1983.
13. Obert, Edward F.; "Internal Combustion Engines and Air Pollution," Harper & Row: NewYork, 1973.

Physical properties for compounds of interest for the natural gas industry appear in GPA Standard 2145, "Table of Physical Properties for Hyrdocarbons and Other Compounds of Interest to the Natural Gas Industry."

Figure 23-2 contains several fictitious entries: the vapor pressures of methane, ethane and ethene at 100 °F, the refractive indicies of methane and ethane at 60 °F, and the liquid densities of methane at 60°F (their use in calculating a few other properties propagate through the figure). The reason they are fictitious is that 60 or 100 °F is above the critical temperatures of these compounds and the liquid state does not exist under such conditions. In no instance is it necessary to use these entries from a technical perspective, but they have worked their ways into contractual agreements. Rather than cause opening of contracts, the GPSA includes these unphysical values in the figure, but users should not rely upon calculations using these values outside of contractual agreements

Liquid Volume Fraction Calculation

Component	x	MW	x•MW	M	lbm	lbm/gal	gal	v
Carbon Dioxide	0.0011	44.010	0.0484	0.0011	914	6.8199	134	0.0007
Methane	0.0214	16.043	0.3433	0.0079	6,480	2.5	2,592	0.0127
Ethane	0.3897	30.070	11.7183	0.2680	221,192	2.9696	74,485	0.3643
Propane	0.3648	44.097	16.0866	0.3679	303,647	4.2268	71,839	0.3514
Iso-butane	0.0294	58.123	1.7088	0.0391	32,255	4.6927	6,873	0.0336
Normal-butane	0.0877	58.123	5.0974	0.1166	96,217	4.8691	19,761	0.0967
Iso-pentane	0.0171	72.150	1.2338	0.0282	23,288	5.2058	4,474	0.0219
Normal-pentane	0.0182	72.150	1.3131	0.0300	24,786	5.2614	4,711	0.0230
Hexanes +	0.0706	87.436	6.1730	0.1412	116,520	5.5910	19,580	0.0958
TOTAL	1.0000		43.7227	1.0000	825,300		204,449	1.0000

and defined specifications. An example would be calculation of the liquid volume fractions for the components of a liquid mixture. The table above comes from GPA Standard 8173:

The liquid volume fraction for methane is fictitious, but experience has shown that using this calculation procedure provides a reliable specification for the maximum liquid volume fraction for methane.

COMPUTER PREDICTION METHODS

Computer methods that predict physical and thermodynamic properties for light hydrocarbons and natural gas constituents are widely available. People involved in the design and operation of natural gas processing facilities use them routinely. This section emphasizes hand calculation methods that provide reliable estimate for thermophysical properties. These methods provide quick, order-of-magnitude checks to evaluate more detailed procedures or when a computer is not available.

Some computer results appear in the section. Using equations of state to predict properties is convenient and easy, but such methods do not apply equally well for all properties. Accurate and reliable values result for gas phase densities, volumes and Z-factors, while liquid volumes and densities are less accurate but still as reliable as predictions using hand-calculation methods. Equations of state are not suitable to predict thermal conductivities, viscosities and surface tensions. Computer programs cited in this section are representative of those widely available for prediction of physical and thermodynamic properties. Inclusion of commercial products in the recommendations of this section does not constitute GPA and/or GPSA endorsement of the program(s). An accurate, reliable equation of state is always the most convenient method for obtaining engineering accuracy gas phase properties. Unfortunately, widespread availability and ease of use are not suitable criteria for choosing an equation of state program.

Z-FACTOR FOR GASES

Pure Gases

The ideal gas equation of state is a convenient and often satisfactory tool when dealing with gases at pressures that do not exceed one atmosphere. The errors associated with this equation are about 2-3% in this pressure range. However, the errors can escalate to hundreds of per cents at higher pressures.

Section 25 presents many equations of state that represent the pressure-volume-temperature relationships for gases. Use of these equations for engineering calculations is complicated and requires a computer or a programmable calculator to complete the calculations in a reasonable amount of time. A generalized, corresponding states plot of Z-factors is reasonably convenient and sufficiently accurate for normal engineering requirements. The Z-factor provides the ratio of the real gas volume to that of the ideal gas.

$$PV = ZnRT = ZmRT/MW \qquad \textbf{Eq 23-1}$$

The Z-factor is a dimensionless parameter, independent of the quantity of gas, determined by the characteristics of the gas, the temperature, and the pressure. Knowing Z, calculation of PVT relationships are as easy at high pressure as at low pressure.

The equation used to calculate gas density is:

$$\rho = \frac{(MW) \cdot P}{10.73\ RT} \qquad \textbf{Eq 23-2}$$

The value for R is 10.73 when pressure is psia, volume is cubic feet, quantity of gas is pound moles, and temperature is °R. Values of R for other combinations of units appear in Section 1.

The theorem of corresponding states that fluids that have the same value of reduced temperature and reduced pressure have the same reduced volume. The reduced property is the property divided by the value of the property at the critical point. Thus, according to the theorem, different fluids that have the same reduced temperature and reduced pressure have the same Z-factor.

$$\text{Reduced Temperature, } T_r = T/T_c \qquad \textbf{Eq 23-3}$$

$$\text{Reduced Pressure, } P_r = P/P_c \qquad \textbf{Eq 23-4}$$

For gas mixtures, the reduced conditions can be determined using pseudo-critical values instead of the true critical values:

$$\text{pseudo-reduced Temperature, } T_r = T/\sum_i (y_i T_{ci}) = T/T_{pc} \qquad \textbf{Eq 23-3a}$$

$$\text{pseudo-reduced Pressure, } P_r = P/\sum_i (y_i P_{ci}) = P/P_{pc} \qquad \textbf{Eq 23-4a}$$

Any units of temperature or pressure are acceptable provided that the same absolute units are used for T as for T_c (T_{pc}) and for P as for P_c (P_{pc}). The "average molecular weight" for a gas mixture is

$$MW_{avg} = \sum_i y_i MW_i \qquad \textbf{Eq 23-5}$$

Figure 23-3 illustrates calculation of pseudo-critical properties and MW_{avg} for a typical natural gas. Estimation techniques to calculate the critical temperature and pressure for hexanes and heavier or heptanes and heavier fractions using molecular weight and specific gravity or average boiling point and relative density are presented in this section.

Attempts to prepare a generalized plot suitable for application to the low molecular weight hydrocarbons, including methane, ethane, and propane, indicate that an error frequently in excess of 2 to 3% is unavoidable because they deviate from the theorem of corresponding states. Figure 23-4, prepared using pure component and gas mixture data, can estimate Z (2-3% error) for pure hydrocarbon gases. Use reduced temperature and pressure instead of pseudo-reduced values for pure components. At low pressures, the different compounds more nearly conform to corresponding states. The Z-factor is approximately 1.0 at pressures below 1 atmosphere. Errors generally are 2-3% for pressures ≤300 psia if the gas is 50 °F or more above its saturation temperature at the pressure of concern.

It is possible to determine gas volumes, densities and Z-factors for pure hydrocarbon and non-hydrocarbon vapors using P-H diagrams like those in Section 24, Thermodynamic Properties. Interpolation between specific volume curves on a P-H diagram does not yield results of high accuracy. An equation of state provides more accurate pure component PVT properties, particularly if that equation has been fit to volumetric data for the specific component. Tabulations of properties obtained in this way appear in the literature.[12]

Example 23-1 — Pure component properties

Using Fig. 24-27, the P- H diagram for propane, calculate the density of propane vapor at 200°F and 100 psia.

Solution Steps

On the P-H diagram at the intersection of the T = 200°F, P = 100 psia lines read v = 1.5 ft^3/lbm. Then: $\rho = 1/1.5 = 0.667$ lbm ft^{-3}

Using the EZ*THERMO[90] version of the SRK[91] equation of state, ρ is 0.662 lb/ft^3, from which v = (1/0.662) = 1.51 ft^3/lbm.

For propane at 200°F and 100 psia using data from Fig. 24-27.

$$Z = \frac{MW \bullet P}{R\, T\rho} = \frac{(44.10)\,(100)}{(10.73)\,(458.67 + 200)\,(0.667)} = 0.936$$

The SRK calculation gives ρ = 0.662 lb/ft3, and Z = 0.941.

Gas Mixtures

GPA Standard 2172, "Calculation of Gross H Value, Relative Density and Compressibility Factor for N Gas Mixtures from Compositional Analysis" contains additional information regarding the calculation of Z-factors for mixtures at pressures below 150 psia.

Minor Amounts of Non-hydrocarbons — Fig 23-4[1] shows Z-factors for typical sweet natural gases. Using Z-factors from Fig. 23-4 should yield mixture volumes (densities) within 2% to 3% of the true values for reduced temperatures from slightly greater than 1.0 to the limits of the chart for both temperature and pressure. The chart has been prepared from data for binary mixtures of methane with ethane, propane and butane and data for natural gas mixtures. All mixtures have average molecular weights less than 40, and all gases contain less than 10% nitrogen and less than 2% combined hydrogen sulfide and carbon dioxide. Fig. 23-4 applies for temperatures 20 °F or more above saturation up to pressures of 10,000 psia.

Appreciable Amount of Non-Hydrocarbons — Figure 23-4 does not apply for gases or vapors with more than 2% H_2S and/or CO_2 or more than 20% nitrogen. Use other methods for vapors that have compositions atypical of natural gases mixtures or for mixtures containing significant amounts of water and/or acid gases, and for all mixtures as saturated fluids, other methods should be employed.

Figure 23-4 provides reasonably accurate gas Z-factors for natural gases with high nitrogen content, up to 50% (or even higher) when using the molar average pseudo-criticals from Eqs 23-3a and 23-4a. The same approach applies to gas condensate fluids containing appreciable amounts of heptanes and heavier components. Critical temperatures and pressures for heptane and heavier fractions can be estimated from molecular weight and relative density, or average boiling point and relative density, using correlations presented in this section.

Figs. 23-5, 23-6 and 23-7 provide Z-factors for low molecular weight natural gases. These figures cover a wide range of molecular weights (15.95 to 26.10), temperatures (-100 to 1000 °F) and pressures (up to 5,000 psia). For gases with molecular weights between those shown in Figs. 23-5 through 23-7, linear interpolation between adjacent charts is sufficient to compute the Z-factors.

In general, Z-factors for gases with less than 5% noncondensable non-hydrocarbons, such as nitrogen, carbon dioxide, and hydrogen sulfide, result with less than 5% error. When the molecular weight is above 20 and the Z-factor is below 0.6, errors as large as 10% may occur.

Effect of Acid Gas Content — Natural gases containing H_2S and/or CO_2 exhibit different Z-factor behavior than do sweet gases. Wichert and Aziz[3] present a calculation procedure to account for these differences. Their method uses the standard gas Z-factor chart (Fig. 23-3) and provides accurate sour gas Z-factors that contain as much as 85% total acid gas. Wichert and Aziz define a "critical temperature adjustment factor," ε, that is a function of the concentrations of CO_2 and H_2S in the sour gas. This correction factor adjusts the pseudo-critical temperature and pressure of the sour gas according to the equations:

$$T_c' = T_c - \varepsilon \qquad \textbf{Eq 23-6}$$

FIG. 23-3

Calculation of Pseudo-critical Temperature and Pressure for a Natural Gas Mixture

Component	Mole Fraction, y_i	Component Critical Temperature, T_{ci}, °R	Pseudocritical Temperature, T_{pc}, °R	Component Critical Pressure, P_{ci}, psia	Pseudocritical Pressure, P_{pc}, psia	Component Molecular Weight, MW	Mixture Molecular Weight, $y_i \bullet MW$
CH_4	0.8319	343.0	285.3	666.4	554.4	16.043	13.346
C_2H_6	0.0848	549.6	46.6	706.5	59.9	30.070	2.550
C_3H_8	0.0437	665.7	29.1	616.0	26.9	44.097	1.927
iC_4H_{10}	0.0076	734.1	5.58	527.9	4.01	58.123	0.442
nC_4H_{10}	0.0168	765.3	12.86	550.6	9.25	58.123	0.976
iC_5H_{12}	0.0057	828.8	4.72	490.4	2.80	72.150	0.411
nC_5H_{12}	0.0032	845.5	2.71	488.6	1.56	72.150	0.231
nC_6H_{14}	0.0063	913.3	5.75	436.9	2.75	86.177	0.543
			T_{pc} = 392.62		P_{pc} = 661.57		MW_m = 20.426
				G = 20.426/28.9625 = 0.705			

FIG. 23-4

Compressibility Factors for Natural Gas[1]

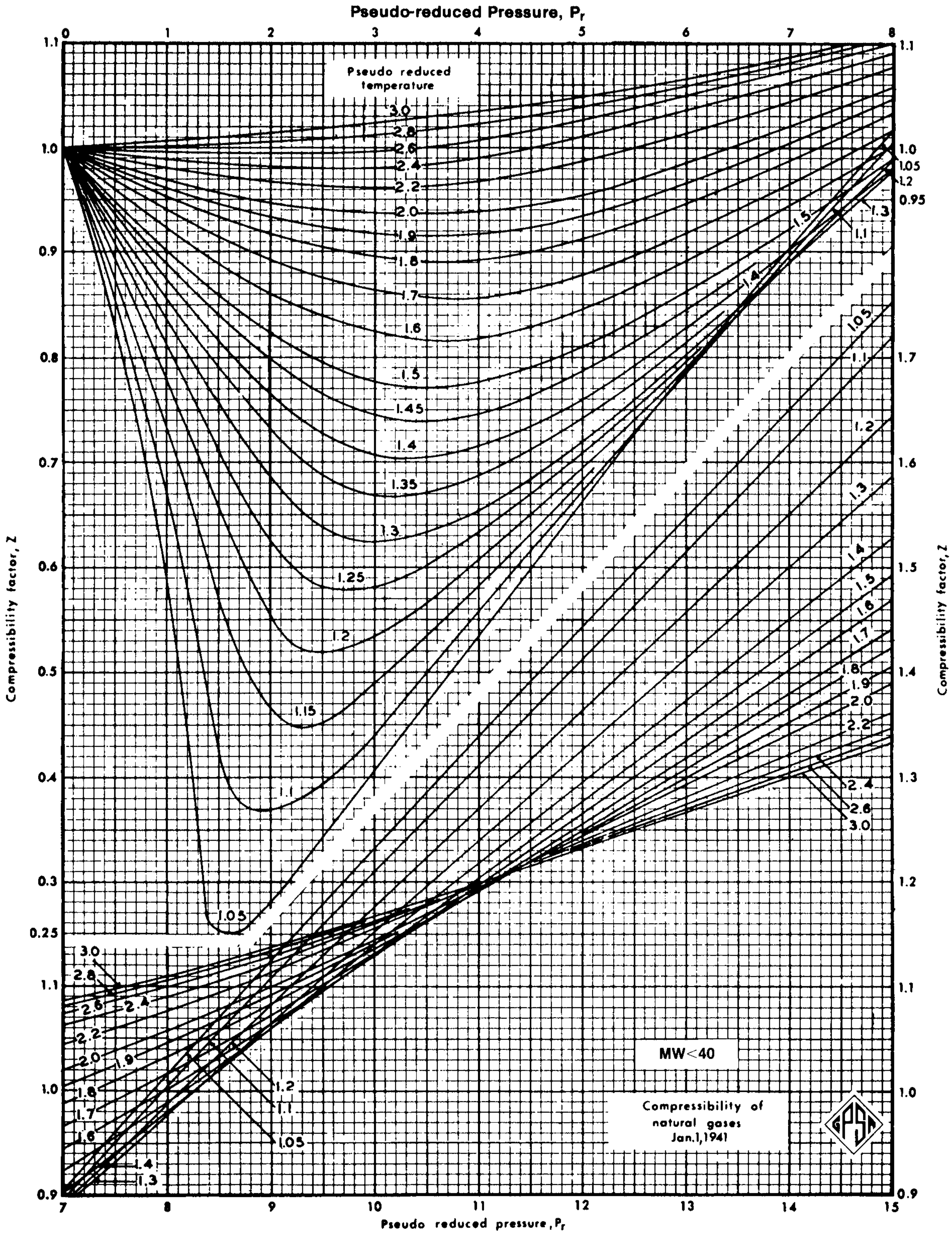

FIG. 23-5

Compressibility of Low-Molecular-Weight Natural Gases[11]

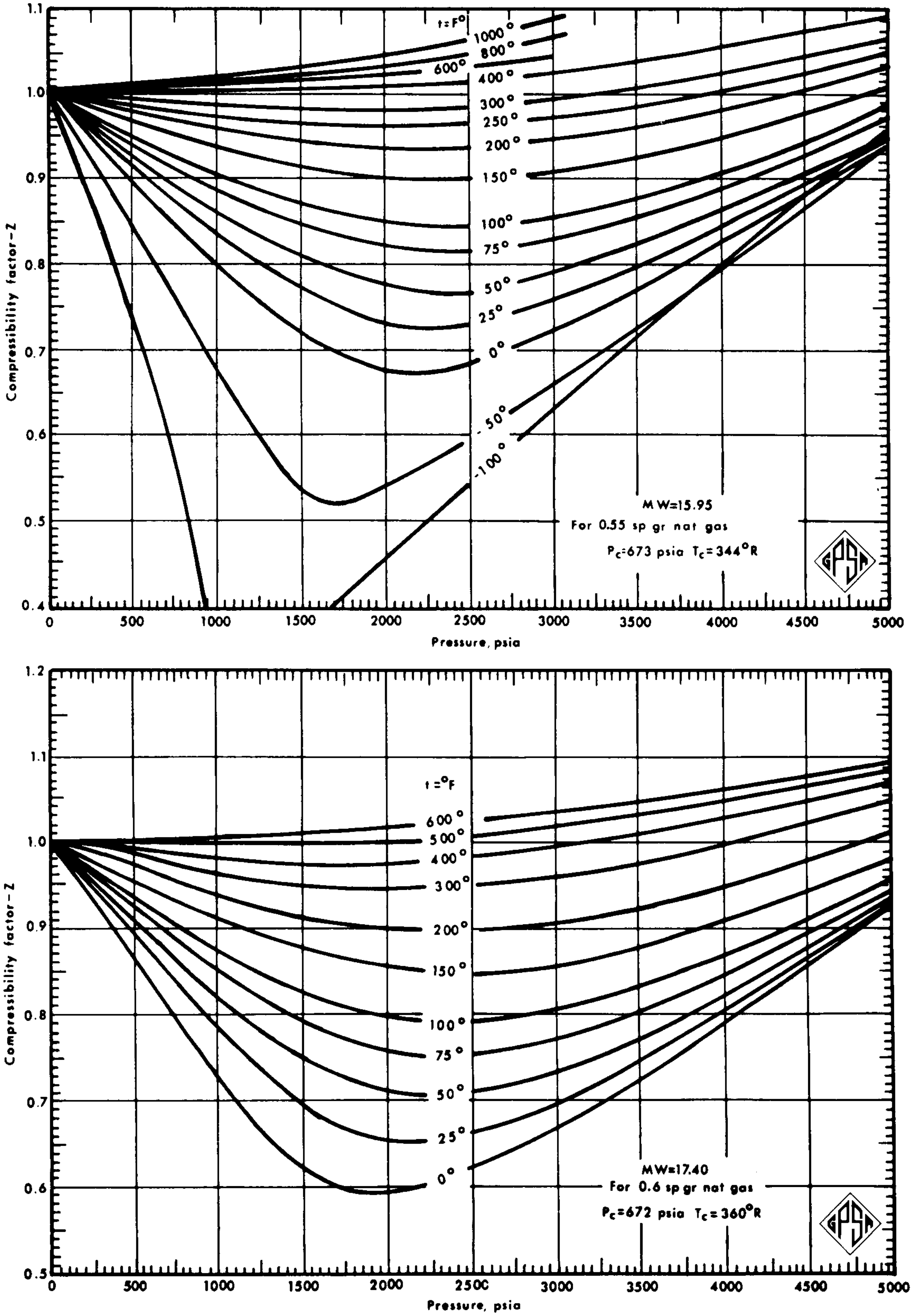

FIG. 23-6

Compressibility of Low-Molecular-Weight Natural Gases[11]

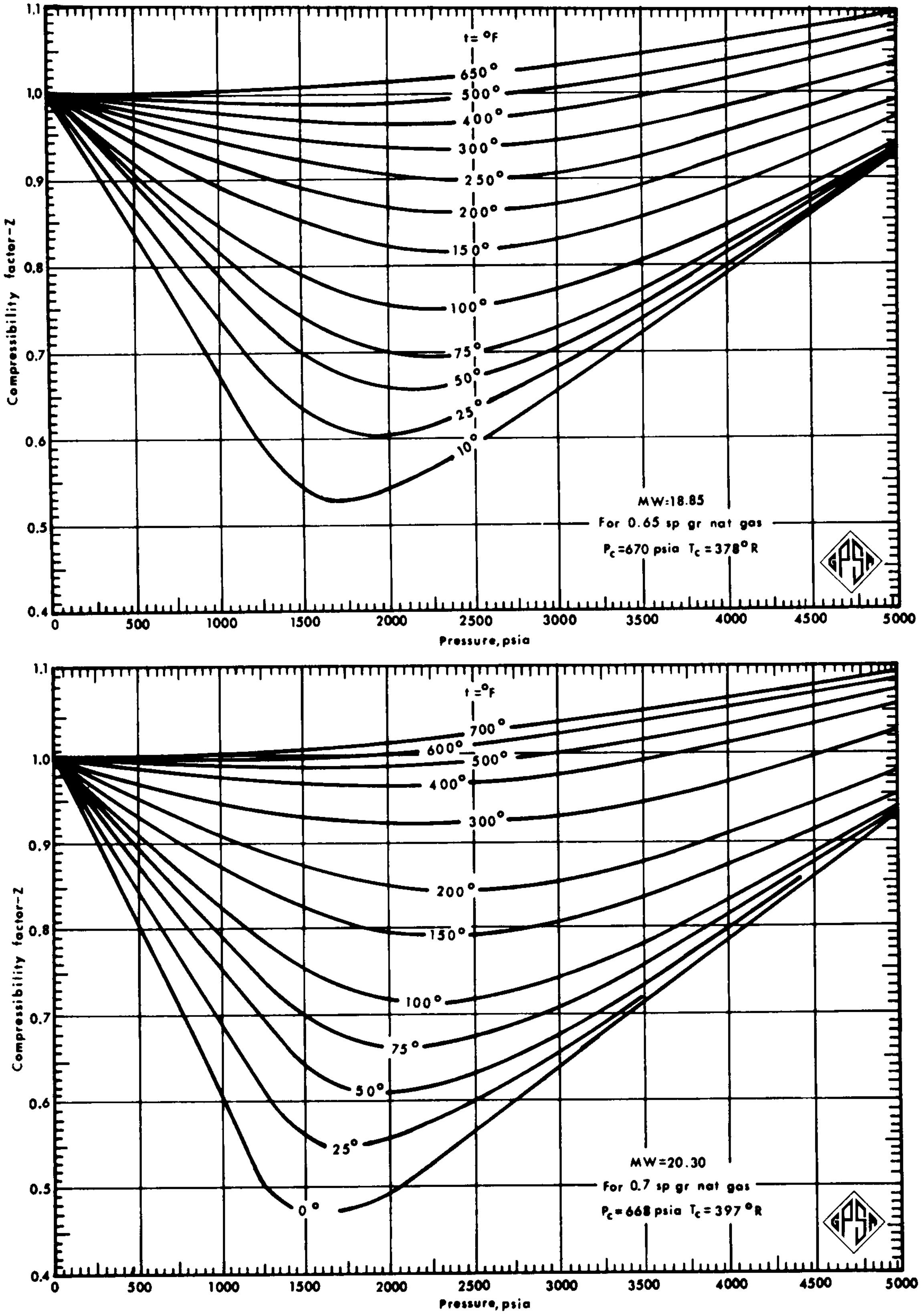

FIG. 23-7

Compressibility of Low-Molecular-Weight Natural Gases[11]

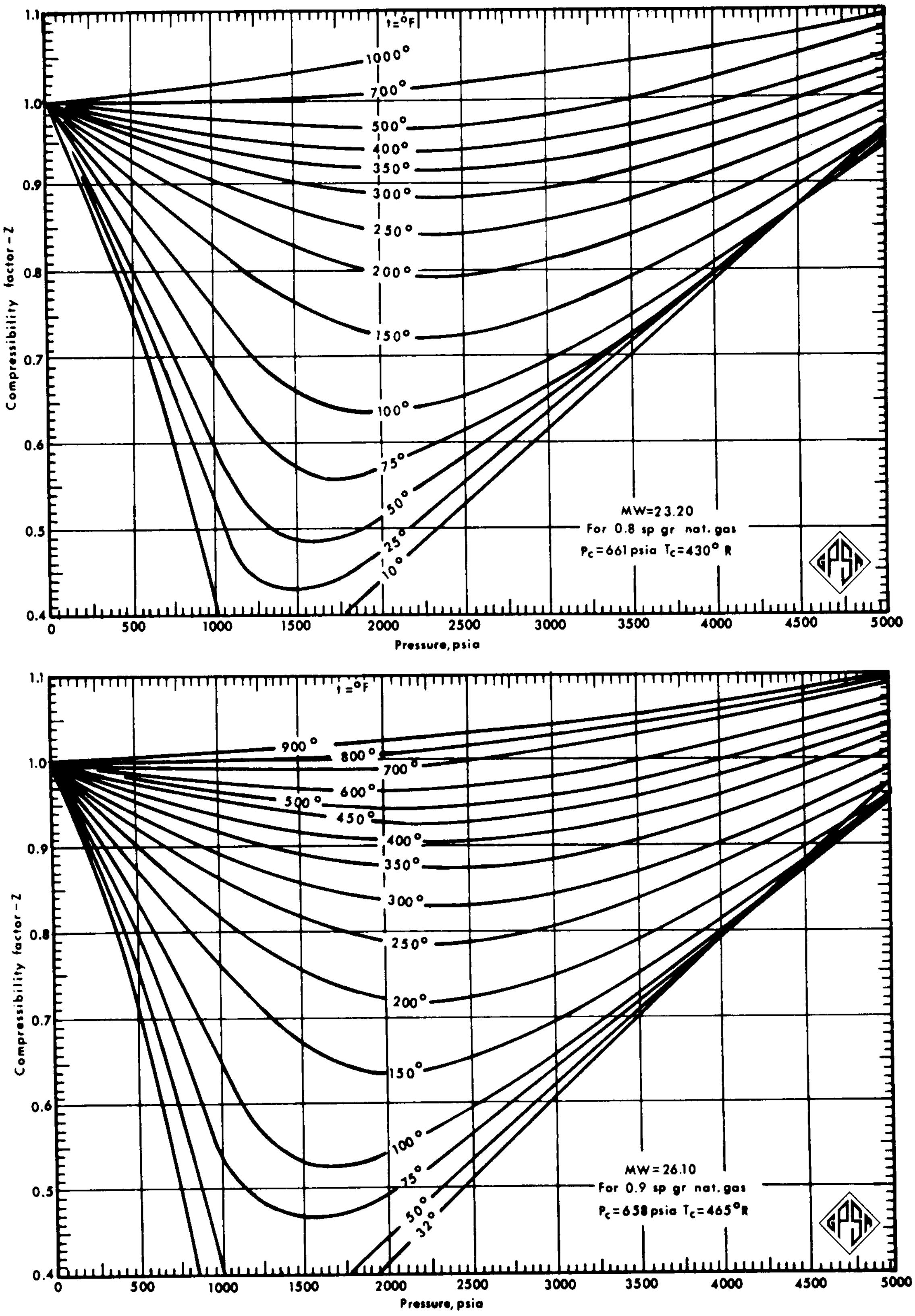

$$P_c' = \frac{P_c T_c'}{T_c + B'(1 - B')\varepsilon} \qquad \textbf{Eq 23-7}$$

Figure 23-8 presents the pseudo-critical temperature adjustment factor. To use the factor, calculate the pseudo-critical temperature and pressure using the procedure outlined earlier. Include the H_2S and CO_2 in this calculation as well as hydrocarbon and other non-hydrocarbon constituents. Read the pseudo-critical temperature adjustment factor from Fig. 23-8 and use it to adjust the values of critical temperature and pressure. The reduced temperature and reduced pressure are calculated using the adjusted values. The Z-factor is then available from Fig. 23-4.

Example 23-2 — A sour natural gas has the composition shown in the following table. Determine the Z-factor for the gas at 100°F and 1000 psia.

FIG. 23-8

Pseudocritical Temperature Adjustment Factor[3], ε, °F

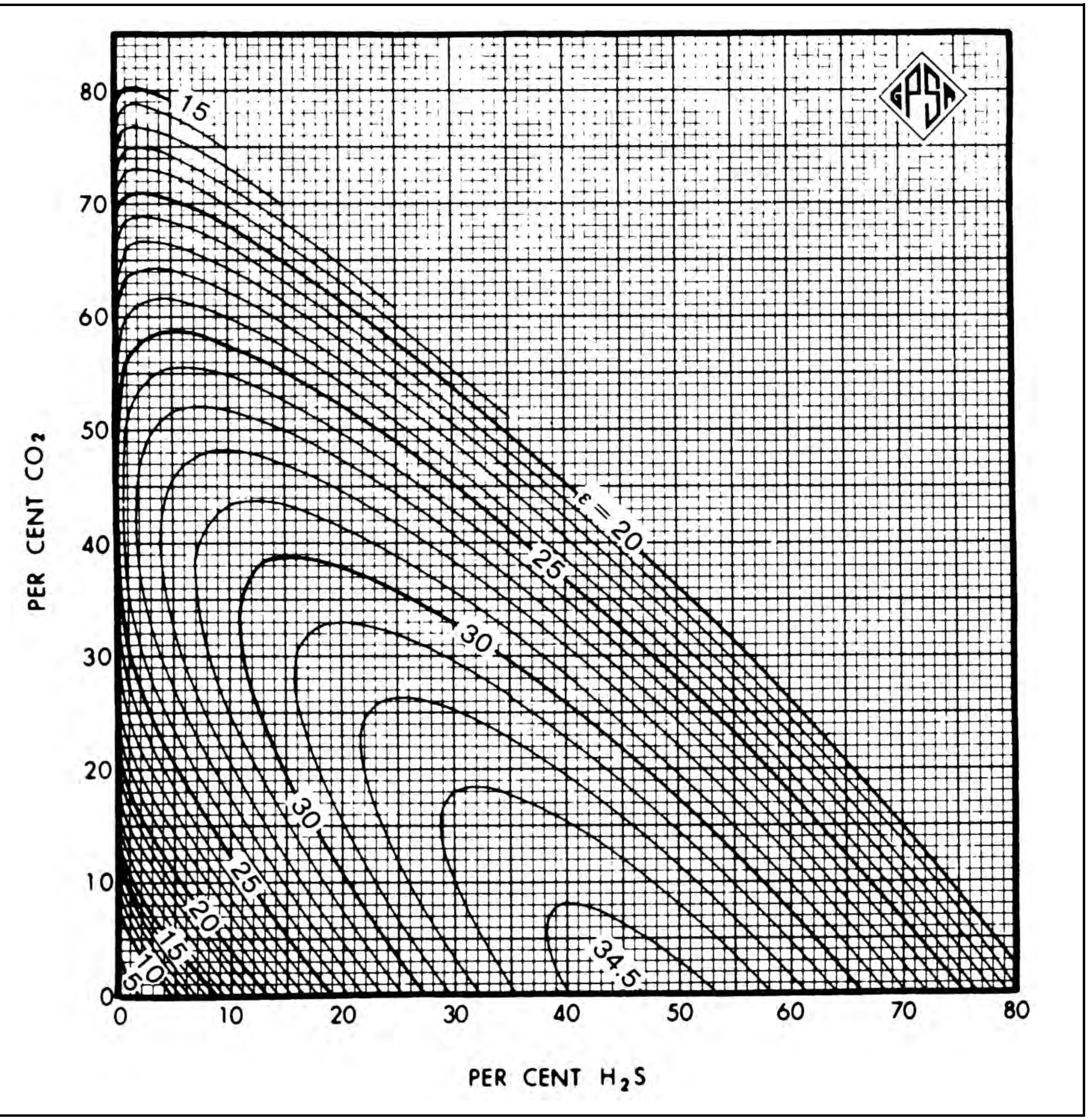

Solution Steps

The first step is to calculate the pseudo-critical temperature and pseudo-critical pressure for the sour gas. Read the pseudo-critical temperature adjustment factor from Fig. 23-8 as 29.8°F. The adjusted pseudo-critical temperature is:

$$T_c' = 433.9 - 29.8 = 404.1\ °R$$

The adjusted pseudo-critical pressure is:

$$P_c' = \frac{(826.9)\ (404.1)}{433.9 + 0.2\ (1 - 0.2)\ (29.8)} = 761.7 \text{ psia}$$

The pseudo-reduced temperature and pseudo-reduced pressure are:

$$T_r' = \frac{100 + 459.67}{404.1} = 1.385$$

$$P_r' = \frac{1000}{761.7} = 1.313$$

$$Z = 0.831 \qquad \text{(Fig. 23-4)}$$

(The EZ*THERMO^{90} version of the SRK gives Z = 0.838.)

HYDROCARBON FLUID DENSITIES

Data and Correlations

Fig. 23-9 presents saturated fluid densities (liquid and vapor) for hydrocarbons and liquid densities for some mixtures. Fig. 23-10 is a plot of relative density as a function of temperature for petroleum fractions.

Figure 23-11 contains subcooled liquid hydrocarbon densities from –50 °F to +140 °F. Corrections to liquid hydrocarbon densities caused by high pressure appear in Fig. 23-15.

Figure 23-12 presents *specific gravities* for petroleum fractions with temperature ranging from 0 °F to 1000 °F and with pressures from atmospheric to 1500 psia. The petroleum fraction is identified within the center grid by two of three characteristics — API gravity at 60 °F, the Watson characterization factor, K_W, or the mean average boiling point. Fig. 23-18 contains the mean average boiling point, the API gravity and an ASTM D-86 distillation of the petroleum fraction. The characterization factor, K_W, is defined in the inset example that illustrates use of Fig. 23-12.

Fig. 23-13 contains the specific gravity of paraffinic hydrocarbons at their boiling points or bubble points. The nomograph applies to mixtures as well as to single components. Alignment points for paraffinic mixtures and pure components vary according to molecular weight.

Fig. 23-13 generally predicts specific gravities within 3% of measured values for paraffinic mixtures. However, the accuracy is somewhat less for mixtures having:

- Reduced temperatures above 0.9.
- Molecular weights less than 30 (low temperature region) and where methane is a significant part of the liquid.

Density of Saturated and Subcooled Liquid Mixtures — Standing and Katz[1] proposed a versatile, manual procedure to calculate the density of gas-saturated and subcooled hydrocarbon liquid mixtures. The basic method proposed uses the additive volume approach for propane and heavier components at standard conditions, then corrected this ideal volume using apparent densities for the gaseous components ethane and methane. Then they corrected the resulting pseudo-density at 60°F and 14.7 psia for pressure using a hydrocarbon liquid compressibility chart and for temperature using a thermal expansion chart (Fig. 23-17). Experience with crude oils and rich absorber oils showed this correlation could predict densities within 1 to 4% of experimental data.

The original correlation did not have a procedure for handling significant amounts of non-hydrocarbons and had a fairly narrow applicable temperature range of 60°F to 240°F. The following procedures and charts are generally applicable to liquids containing components heavier than pentanes (gas saturated or subcooled) at pressures up to 10,000 psia and temperatures from –100°F to 600°F. This procedure can handle significant amounts of non-hydrocarbons (up to 20% N_2, 80% CO_2, and 30% H_2S).

1. Set up a calculation table as shown in the example in Fig. 23-16.
2. Calculate the density of propane and heavier (C_3+) or, if H_2S is present, of H_2S and heavier (H_2S+) components, assuming additive volumes.

$$\text{Densityof } CO_2 \text{ and } (N_2S +)$$

$$= \frac{\text{Weight } C_3 + \text{(or } H_2S +\text{) components}}{\text{Vol } C_3 + \text{(or } H_2S +\text{) components}} \qquad \textbf{Eq 23-8}$$

3. Determine the weight percent of (N_2 + C_2) in the (N_2 + C_2+) fraction.

$$\text{Wt \% } (N_2 + C_2) = \frac{100\ [\text{Wt } (N_2 + C_2)]}{\text{Wt } (N_2 + C_2 +)} \qquad \textbf{Eq 23-9}$$

4. Use Fig. 23-14 to determine the pseudo-density of the (N_2 + C_2+) fraction. Enter with the C_3+ (or H_2S plus) density from Step 2 in the upper left of the chart and go horizontally to the line (interpolate if necessary) representing the weight % (N_2 + C_2) , then look up and read the pseudo-density of the (N_2 + C_2+ along the top of the chart.

At temperatures below –20°F, ethane can be included in Step 2 and only N_2 used in Steps 3 and 4.

5. If CO_2 is not present, go to Step 6. If it is present, then account for it on an additive volume basis:

$$\text{Densityof } CO_2 \text{ and } (N_2 + C_2 +)$$

$$= \frac{\text{Wt } CO_2 + \text{Wt } (N_2 + C_2 +)}{\text{Vol } CO_2 + \text{Vol } (N_2 + C_2 +)} \qquad \textbf{Eq 23-10}$$

where

$$\text{Vol } (N_2 + C_2 +) = \frac{\text{Wt } (N_2 + C_2 +)}{\text{Density } (N_2 + C_2 +)}$$

6. Calculate the weight percent methane Wt methane

$$\text{Wt \% methane} = \frac{100\ (\text{Wt methane})}{\text{total Wt}} \qquad \textbf{Eq 23-11}$$

7. Enter the top of Fig. 23-14 with the pseudo-density from Step 4 or 5 as appropriate, and drop vertically to the line (interpolation may be required) representing the weight percent methane. Read the pseudo-density of the mixture (60°F and 14.7 psia) on the right side of the chart.
8. Correct the pseudo-density to the actual pressure using Fig. 23-15. Add the correction to the pseudo-density from Step 7.

FIG. 23-9

Hydrocarbon Fluid Densities[2, 3, 19]

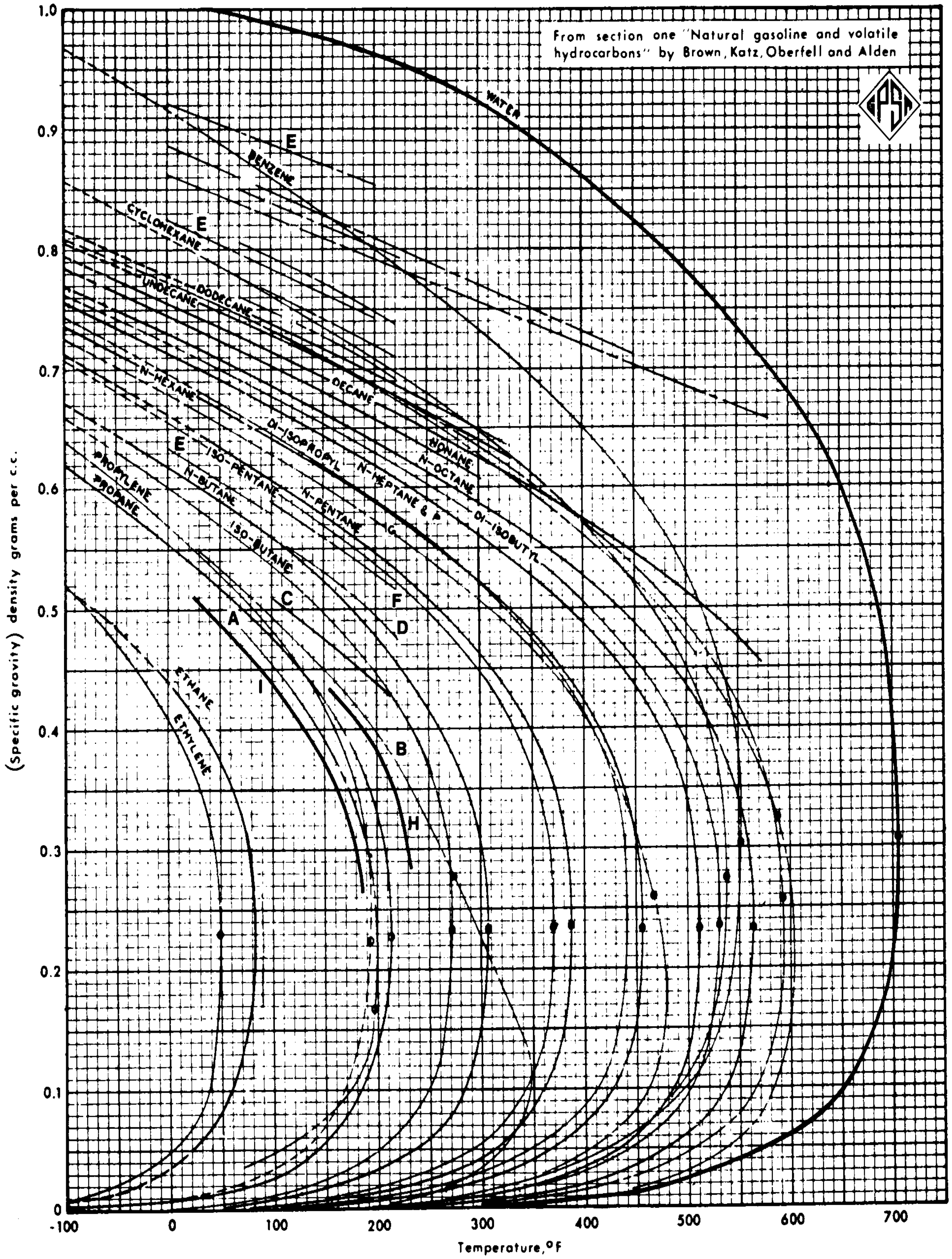

Identification

- A 8 mol % CH_4—92 mol % C_3H_8 (370-739 lbs.)
- B 50.25 wt. % C_2H_6—49.75 wt. % n-C_7H_{16}
- C 19.2 wt. % CH_4—80.8 wt. % C_6H_{14} (2412-2506 lbs.)
- D 7.15 wt. % CH_4—92.85 wt. % n-C_5H_{12} (854-1043 lbs.)
- E National Standard Petroleum Oil Tables
- F 7.15 wt. % CH_4—92.85 wt. % n % C_5H_{12} (at 3000 lbs.)
- G 9.78 wt. % C_2H_6—90.22 wt. % n-C_7H_{16}
- H 75.45 mole % C_3H_8—24.55 % nC_4H_{10} (ref 4)
- I 65.77 mole % C_2H_6—34.23 % nC_4H_{10} (ref 3)

(Note: Reference for streams A-G see ref. 19)

FIG. 23-10

Approximate Specific Gravity of Petroleum Fractions

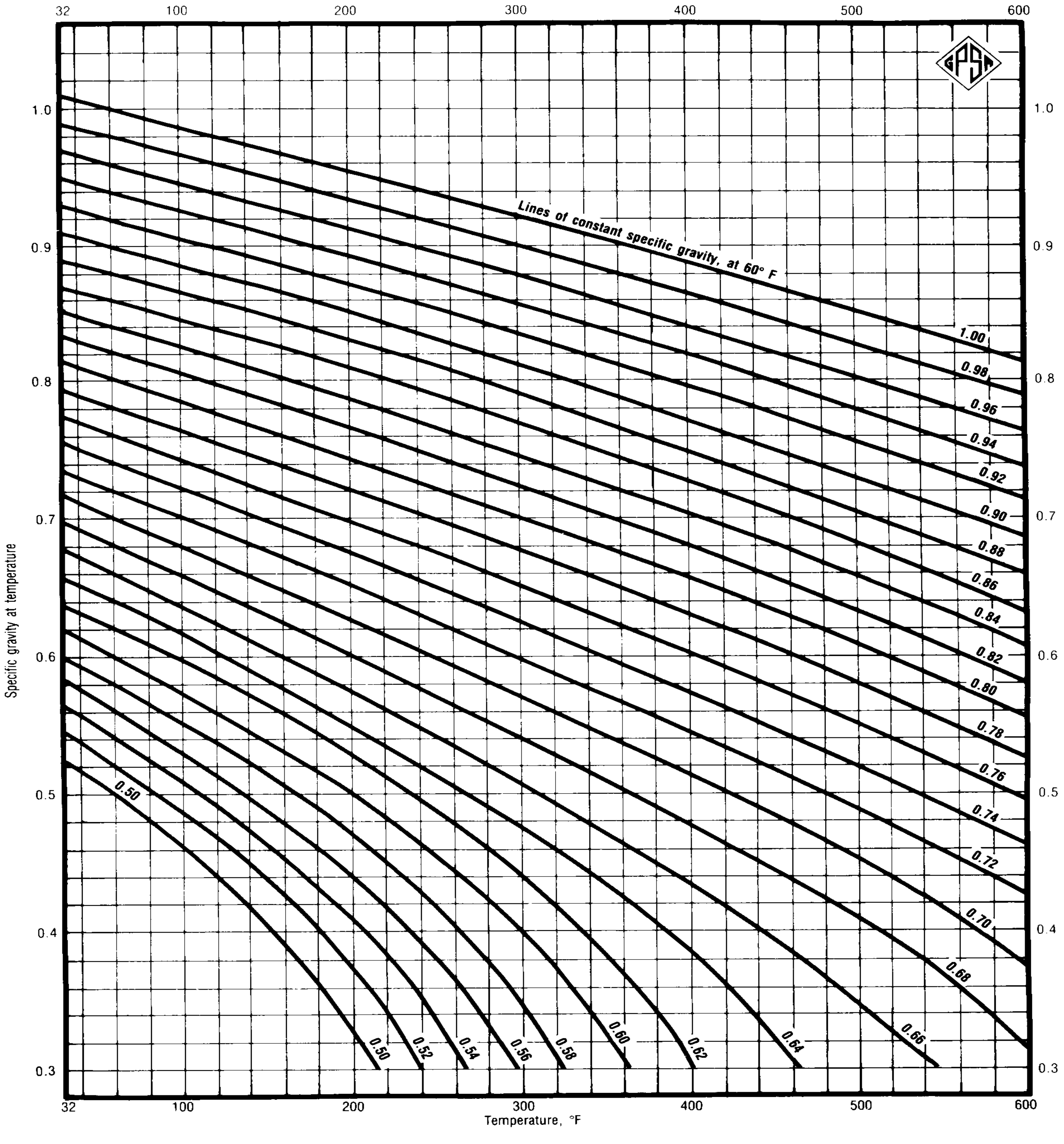

FIG. 23-11

Effect of Temperature on Hydrocarbon Liquid Densities[19]

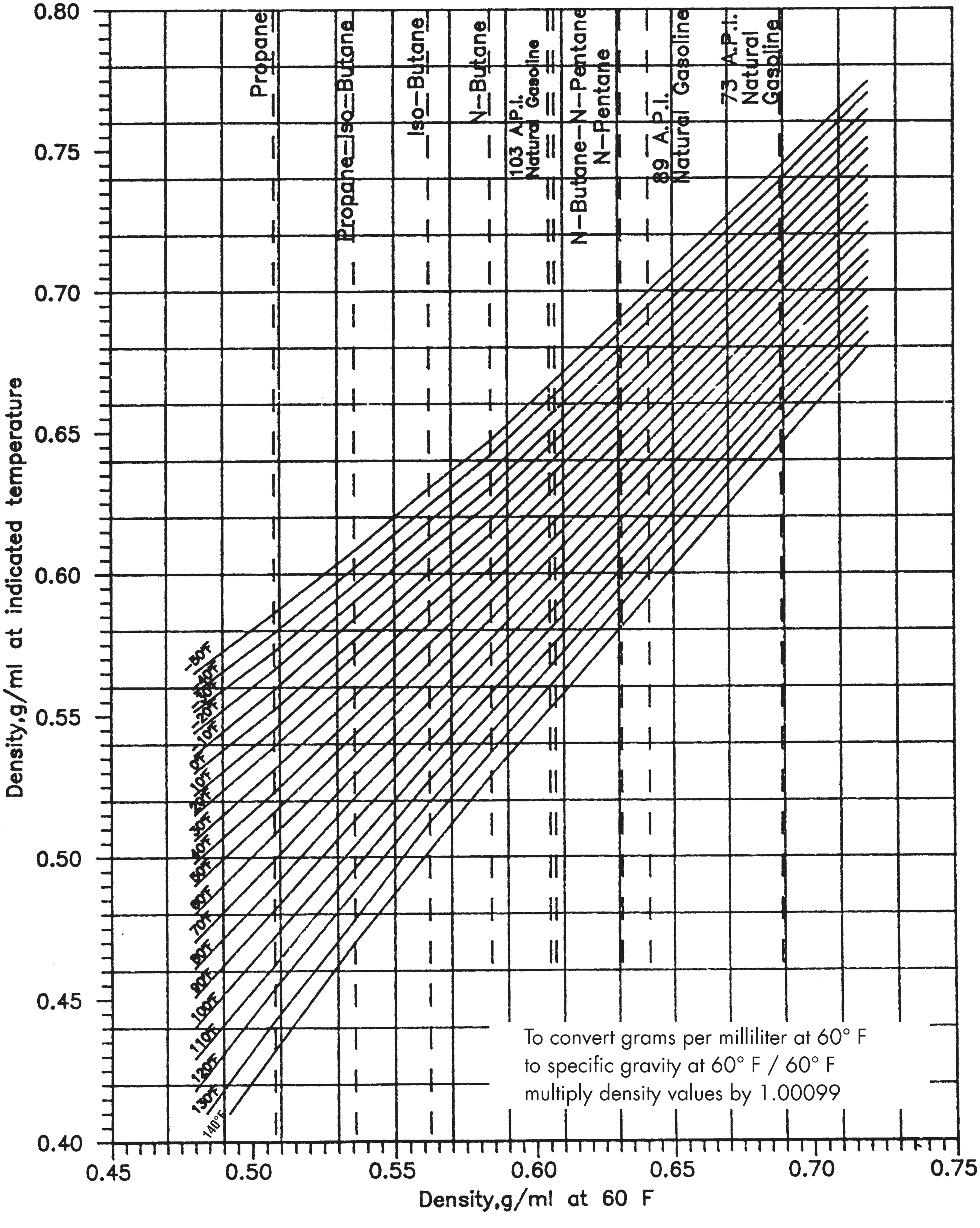

To convert grams per milliliter at 60° F to specific gravity at 60° F / 60° F multiply density values by 1.00099

FIG. 23-12

Specific Gravity of Petroleum Fractions

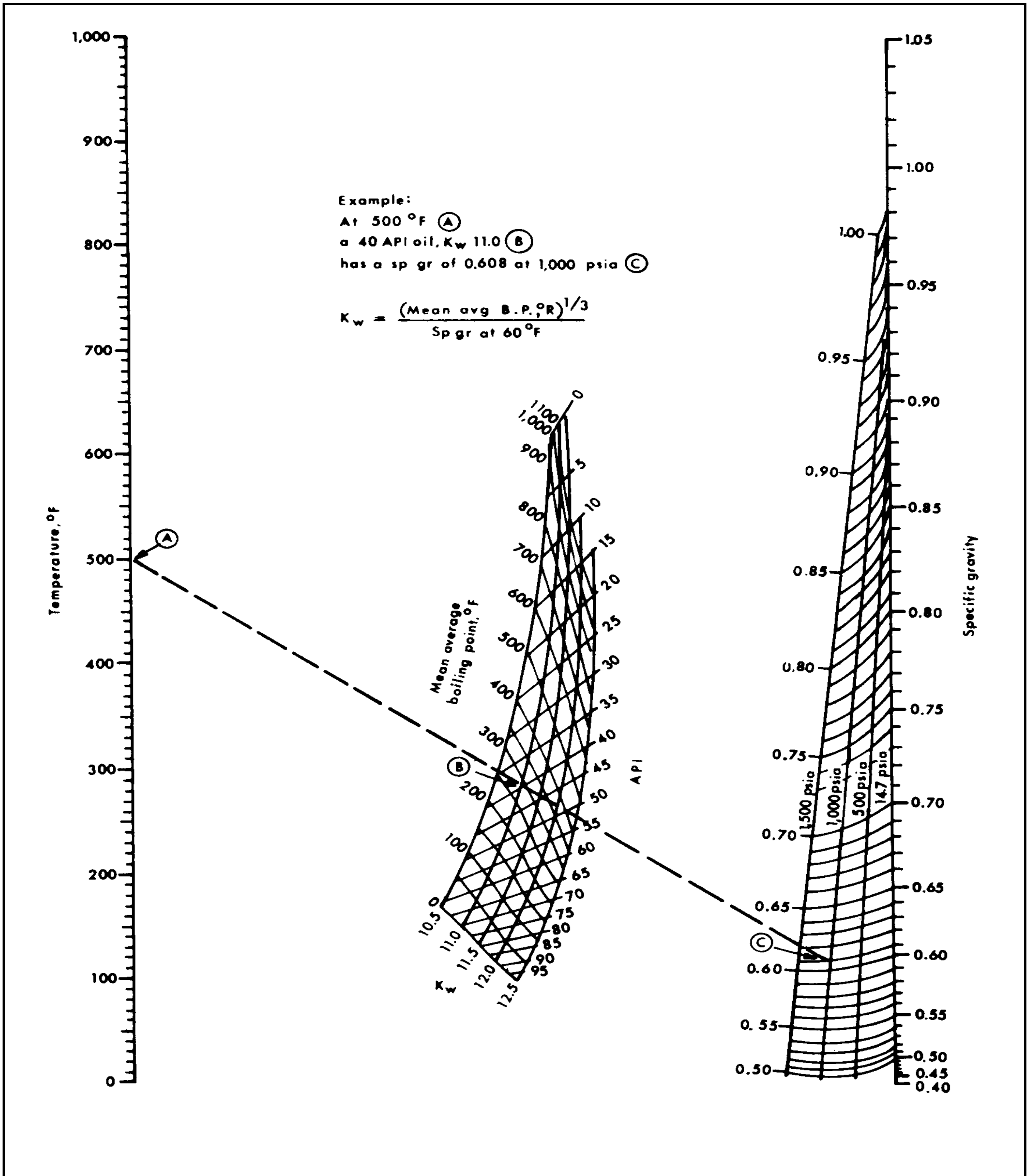

Example:
At 500 °F Ⓐ
a 40 API oil, K_w 11.0 Ⓑ
has a sp gr of 0.608 at 1,000 psia Ⓒ

$$K_w = \frac{(\text{Mean avg B.P., }°R)^{1/3}}{\text{Sp gr at }60\,°F}$$

Petroleum Refiner:
Ritter, Lenoir & Schweppe (1958)

FIG. 23-13

Specific Gravity of Paraffinic Hydrocarbon Mixtures

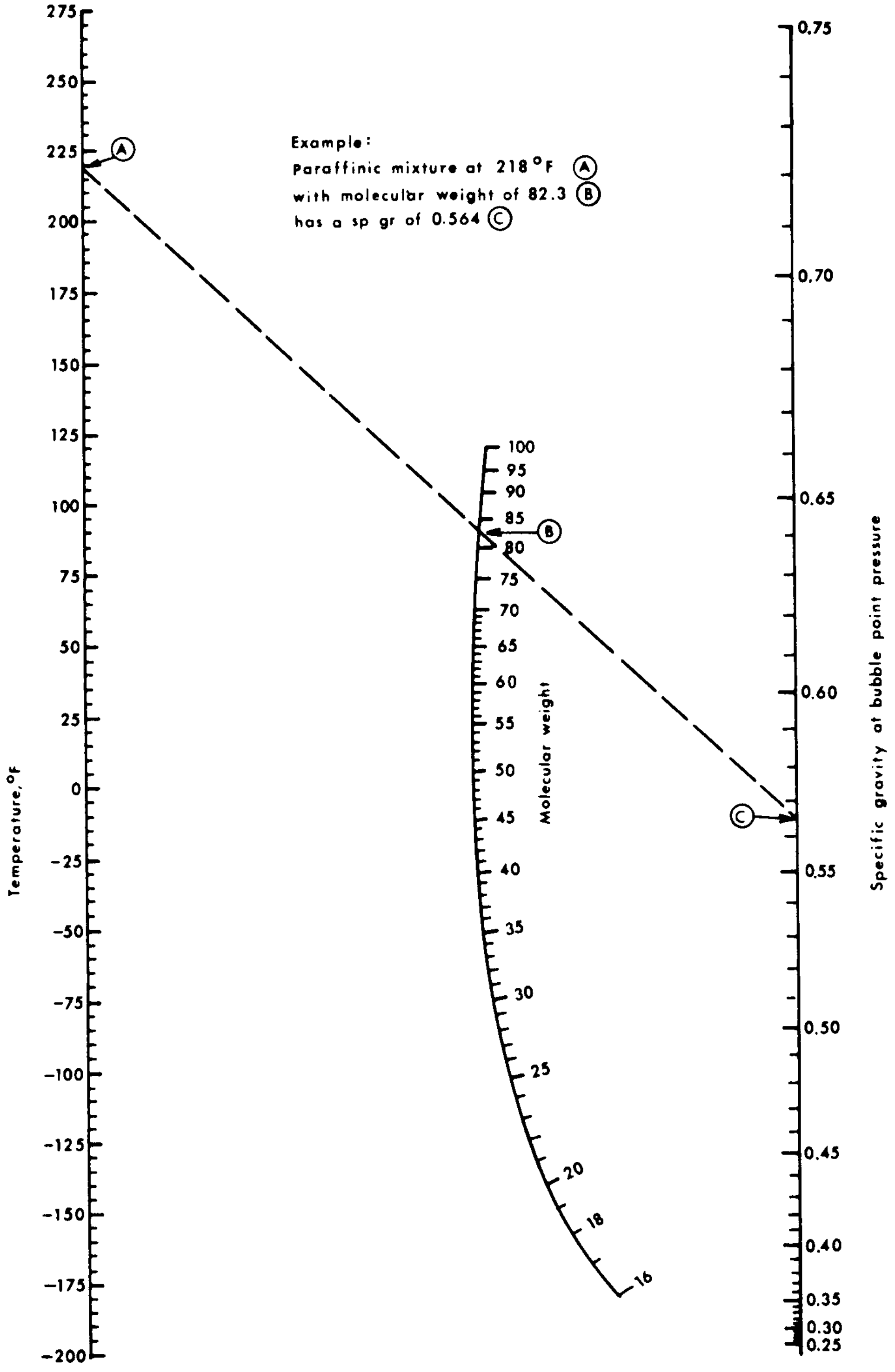

Modified from Petroleum Refiner:
Ritter, Lenoir & Schweppe (1958)

FIG. 23-14

Pseudo Liquid Density of Systems Containing Methane and Ethane

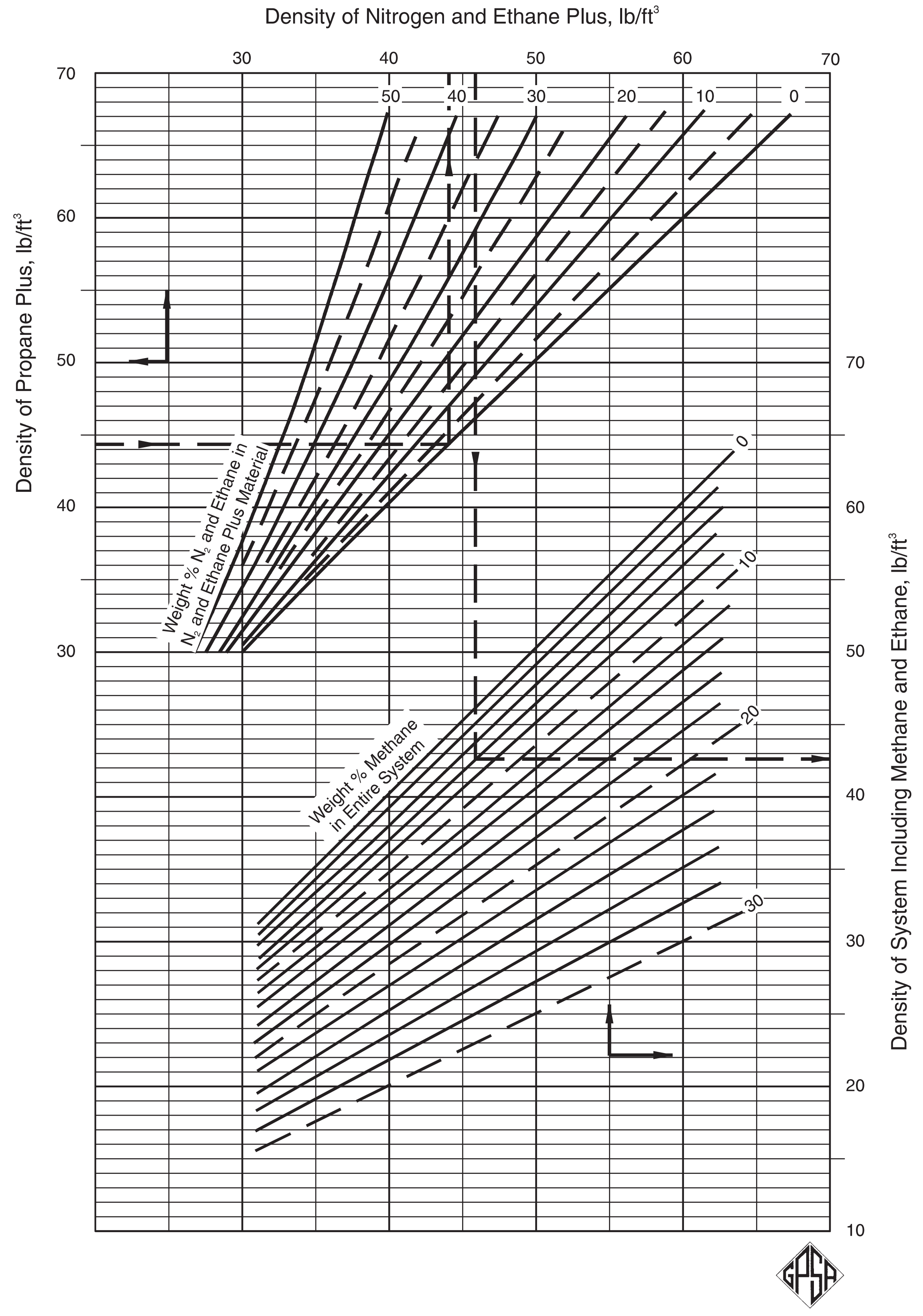

FIG. 23-15

Density Correction for Compressibility of Hydrocarbon Liquids

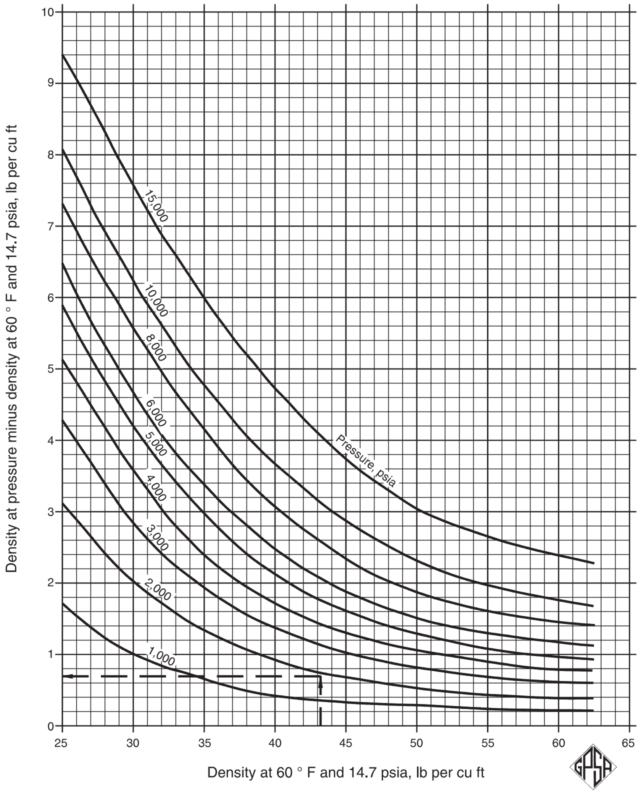

9. Correct the density at 60°F and pressure to the actual temperature using Fig. 23-17. Add the correction to the density from Step 8.

This procedure is not valid in the critical region. Mixtures at temperatures greater than 150 °F that contain more than 60 mol% methane or more than 80 mol% CO2 are problem areas. Outside the near-critical region, calculated densities usually are within 5% of experimental data[35] and errors are rarely greater than 8%. The best accuracy occurs for mixtures containing mostly C_5+ with relatively small amounts of dissolved gaseous components (errors are usually less than 3%). Note that densities of C_2+, C_3+, CO_2+, or C_4+ mixtures can be calculated by this procedure at various temperatures and pressures, and that the gaseous components need not be present.

Example 23-3 — Fig. 23-16 illustrates the procedure outlined above.

$$\text{Density of } C_3+ = \frac{\text{Wt of } C_3+}{\text{Vol of } C_3+} = \frac{44.836\ \text{lbm}}{1.0128\ \text{ft}^3}$$

$$= 44.275\ \text{lbm/ft}^3$$

$$\text{Wt \% } C_2 \text{ in } C_2+ = \left(\frac{100\ (0.567)}{0.567 + 44.836}\right) = 1.25\%$$

$$\text{Density of } CO_2+ = \frac{45.403 + 17.485}{(45.403/44.0) + 0.3427} = 45.75\ \text{lbm/ft}^3$$

Wt% of CH_4 in Total = 100(3.352)/66.241 = 5.1%

Pseudo-density of mixture at 60°F and 14.7 psia from Fig. 23-14 = 42.9 1bm/ft^3

Pressure correction to 1760 psia from Fig. 23-15 = +0.7

Density at 60°F and 1760 psia = 42.9 + 0.7 = 43.6 lb/ft^3

Temperature correction to 120 °F from Fig. 23-17 = -1.8

Density at 120 °F and 1760 psia = 43.6- 1.8 = 41.8 lb/ft^3

FIG. 23-16

Calculation of Liquid Density of a Mixture at 120°F and 1760 psia

(1)	(2)	(3)	(4)=(2)•(3)	(5)	(6)=(4)/(5)
Component	**Mole Fraction**	**Molecular Weight**	**Weight, lb**	**Density (60°F), lb/cu ft**	**Volume, cu ft**
Methane	0.20896	16.043	3.352	–	–
Carbon Dioxide	0.39730	44.010	17.485	51.016	0.3427
Ethane	0.01886	30.070	0.567	–	–
Propane	0.02387	44.097	1.053	31.619	0.0333
n-Butane	0.03586	58.123	2.084	36.423	0.0572
n-Pentane	0.02447	72.150	1.766	39.360	0.0449
n-Hexane	0.01844	86.177	1.589	41.400	0.0384
n-Heptane	0.02983	100.204	2.989	42.920	0.0696
n-Octane	0.02995	114.231	3.421	44.090	0.0776
n-Decane	0.18208	142.285	25.907	45.790	0.5658
n-Tetradecane	0.03038	198.394	6.027	47.815	0.1260

FIG. 23-17

Density Correction for Thermal Expansion of Hydrocarbon Liquids

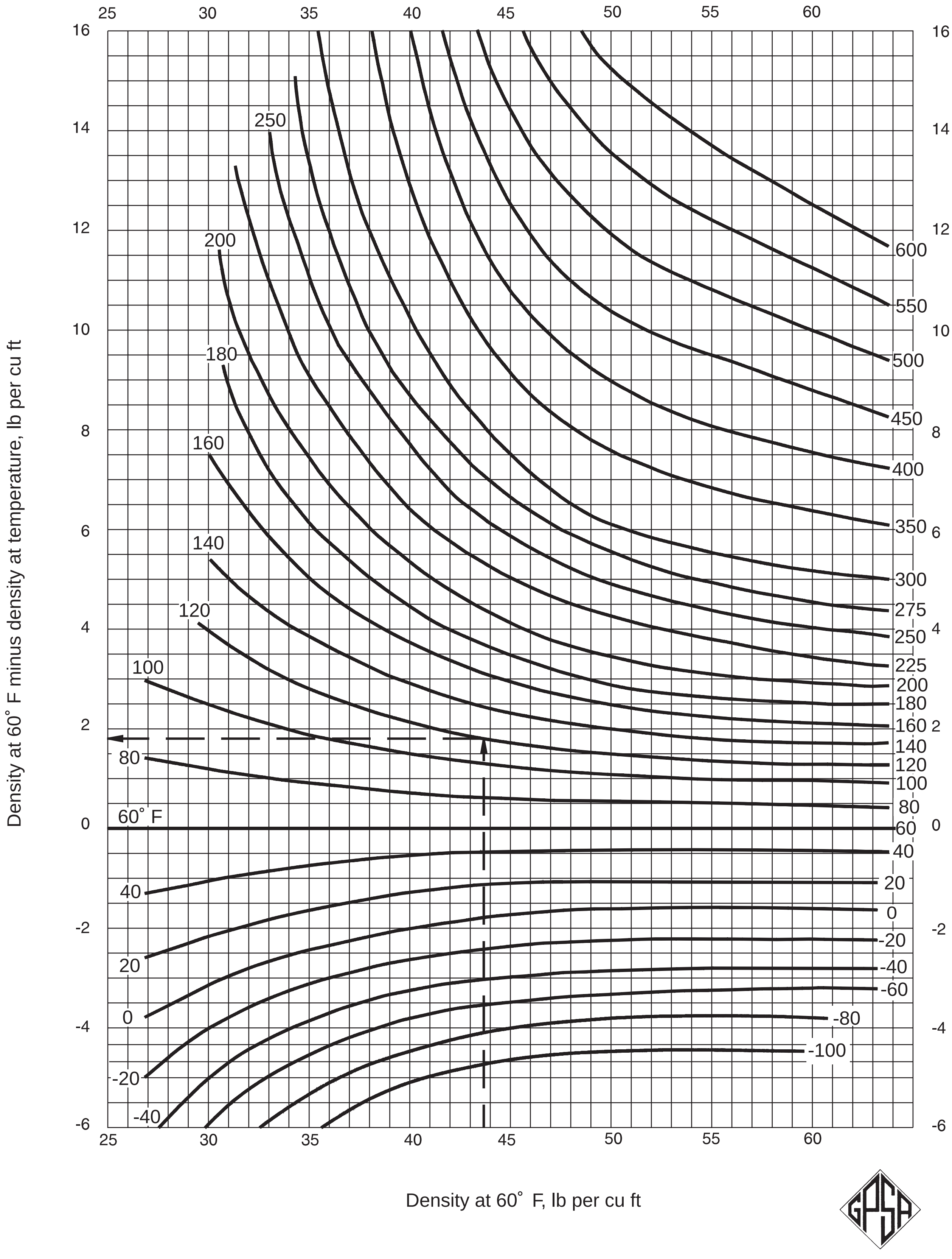

Density from EZ*THERMO version of SRK using Costald[92] = 41.815 lb/ft^3.

Experimental density[35] at 120°F and 1760 psia = 41.2 lb/ft^3

Error = (41.8 - 41.2)/41.2 = 0.015, or 1.5%

BOILING POINTS, CRITICAL PROPERTIES, ACENTRIC FACTOR, VAPOR PRESSURE

Boiling Points

Fig. 23-18 shows the interconversion between ASTM D-86 distillation 10% to 90% slope and the different boiling points used to characterize fractions of crude oil to determine the properties; VARP, WARP, CARP, MeARP, and MABP. On the basis of ASTM D-86 distillation data, the volumetric average boiling (VARP) point is:

$$\text{VARP} = (t_{10} + t_{30} + t_{50} + t_{70} + t_{90})/5 \qquad \textbf{Eq 23-12}$$

where the subscripts 10, 30, 50, 70, and 90 refer to the volume percent recovered during the distillation. The 10% to 90% slope used as the abscissa in Fig. 23-18 is:

$$\text{slope} = (t_{90} - t_{10})/(90 - 10) \qquad \textbf{Eq 23-13}$$

To use the graph, locate the curve for the distillation VARP in the appropriate set for the type of boiling point desired. For the known 10-90% slope, read a correction for the VABP from the selected VABP curve.

Example 23-4 — Determine the mean average boiling point (MeABP) and the molecular weight for a 56.8° API petroleum fraction with the following ASTM distillation data.

% Over	Temperature, °F
IBP	100
5	130
10	153
20	191
30	217
40	244
50	280
60	319
70	384
80	464
90	592
EP	640

IBP = initialboiling point   EP = endpoint

$$\text{Slope} = (592 - 153)/80 = 5.49$$

$$\text{VABP} = (153 + 217 + 280 + 384 + 592)/5 = 325°\text{F}$$

Refer to Fig. 23-18. Read down from a slope of 5.49 to the interpolated curve to 325 °F in the set drawn with dashed lines (MeABP). Read a correction value of –54 on the ordinate. Then

$$\text{MeABP} = 325 - 54 = 271°\text{F}$$

FIG. 23-18

Characterizing Boiling Points of Petroleum Fractions (From API Technical Data Book)

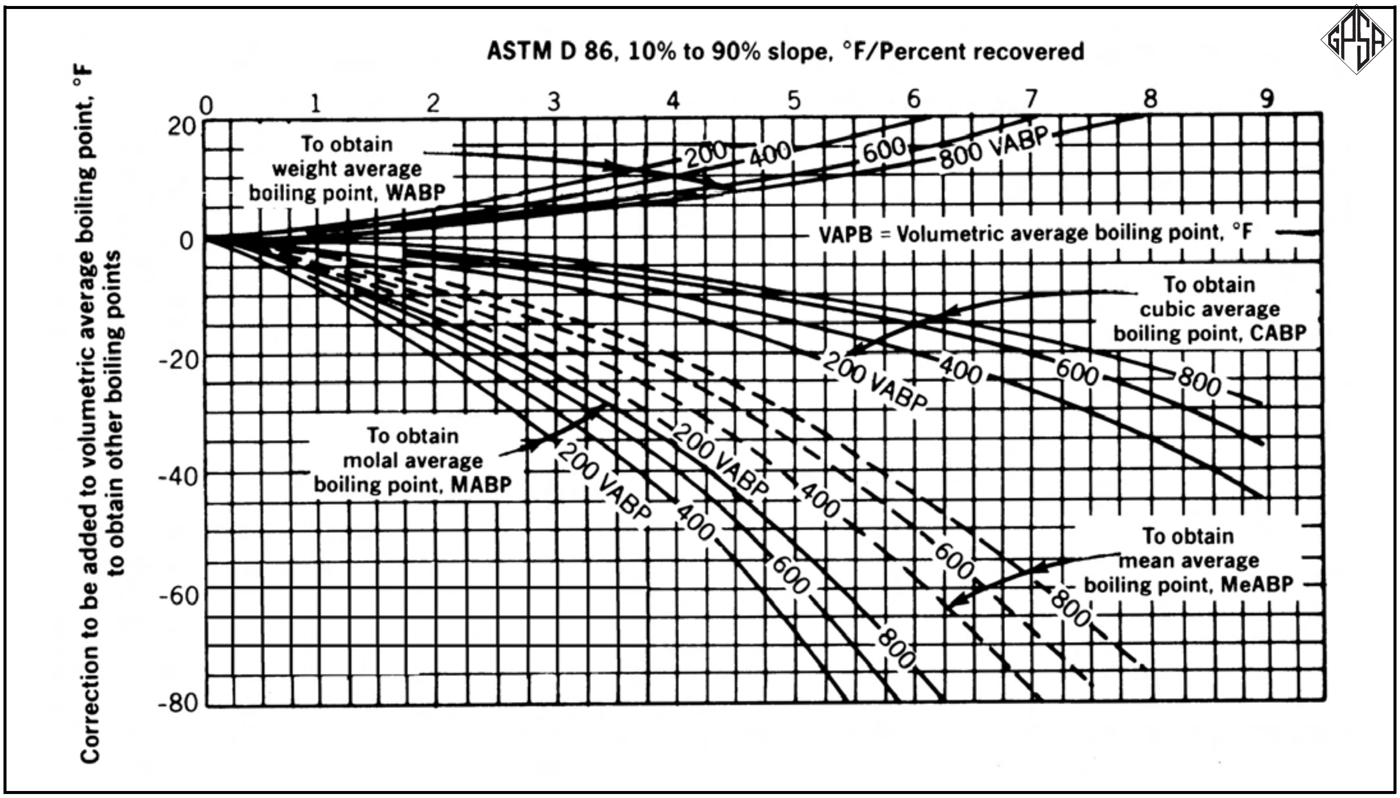

The significance of the various average boiling points, interconversion of D-86 and D-1160 A8TM distillations, and the calculation of true-boiling point and atmospheric flash curves from A8TM distillation data are in Chapters 3 and 4 of the API Technical Data Book.[36]

Molecular weight can be calculated from Eq 23-14 using MeABP in °R and S (specific gravity at 60°F):

$$MW = 204.38\,(T^{0.118})(S^{1.88})\,e^{(0.00218T\,-\,3.075\,S)} \qquad \textbf{Eq 23-14}$$

This relationship is valid in the molecular weight range of 70 to 720; the MeABP range of 97 to 1040 °F; and the API range of 14° to 93°. The average error is about 7%. Eq. 23-14 works best for molecular weights above 115; it tends to over-predict below this value.

Example 23-5 — Calculation of molecular weight.

From Example 23-4:

$S = 0.7515$ for 56.8° API

$MeABP = 271 + 460 = 731°R$

Using Eq 23-14,

$$MW = 204.38(731)^{0.118}\,(0.7515)^{1.88}\,e^{[(0.00218)(731)\,-\,(3.075)(0.7515)]} = 127.0$$

Critical Properties

Critical properties are of interest because they are used to find reduced conditions of temperature and pressure as required for corresponding states correlations. Pseudo-critical properties are used in many corresponding states correlations for mixtures.

The following equations taken from the API Technical Data Book[36a,b] estimate pseudo-critical temperature and pressure for petroleum fractions (pseudo, or undefined components):

$$P_{pc} = 3.12281(10^9)\,T^{-2.3125}\,S^{\,2.3201} \qquad \textbf{Eq 23-15}$$

$$T_{pc} = 24.2787\,T^{0.58848}\,S^{0.3596} \qquad \textbf{Eq 23-16}$$

These equations are in terms of T = MeABP (°R) and specific gravity, S, at 60 °F. Both of these correlations are valid over the range of 80 to 690 molecular weight; 70 to 295°F normal boiling point; and 6.6° to 95° API.

Example 23-6 — Pseudo-critical temperature and pressure.

Take the previous mixture (from Example 23-4) with:

VABP = 325 °F
MeABP = 271°F
API = 56.8°
MW = 127 (Ex. 23-5)
ASTM D-86, 10% to 90% Slope = 5.49

Find its pseudo-critical temperature.

Solution Steps

From Fig. 23-18 with ASTM D-86 slope = 5.49 find a VABP correction of about –85°F (extrapolated from the left-hand group).

MABP = 325- 85 = 240°F

Use Eq 23-16 to calculate the pseudo-critical temperature:

$$T_{pc} = 24.2787\,(271 + 460)^{0.58848}\,(0.7515)^{0.3596} = 1062\ °R \text{ or } 602\ °F$$

For this 56.8° **API** fluid, estimate the pseudo-critical pressure, using Eq 23-15 and MeABP = 271°F:

$$P_{pc} = 3.12281(10^9)\,(271 + 460^{)-2.3125}\,(0.7515)^{2.3021} = 386 \text{ psia}$$

Acentric Factor

The acentric factor, ω, is often a third parameter in corresponding states correlations. Figure 23-2 tabulates it for pure hydrocarbons. The acentric factor is a function of P_{vp}, P_c, and T_c. It is arbitrarily defined as

$$\omega = -\log(P_{vp}/P_c)_{Tr=0.7}-1.0 \qquad \textbf{Eq 23-17}$$

This definition requires knowledge of the critical (pseudo-critical) temperature, vapor pressure, and critical (pseudo-critical) pressure.

For a hydrocarbon mixture of known composition that contains similar components, a reasonably good estimate for the acentric factor is the molar average of the individual pure component acentric factors:

$$\omega = \sum_i y_i \omega_i \qquad \textbf{Eq 23-18}$$

If the vapor pressure is not known, ω can be estimated[38] for pure hydrocarbons or for fractions with boiling point ranges of 50°F or less using:

$$\omega = \frac{3}{7}\left[\frac{\log\ P_c - \log\ 14.7}{(T_c\,/T_b) - 1}\right] - 1.0 \qquad \textbf{Eq 23-19}$$

Example 23-7 — Acentric factor.

A narrow-boiling petroleum fraction has a VABP of 418°F, an ASTM slope of 0.75 and an API gravity of 41°. Estimate its acentric factor. To use Eq 23-19 we need the average boiling point (MeABP); the pseudo-critical temperature (a function of MABP); and the pseudo-critical pressure (a function of MeABP).

From Fig. 23-18, the correction to VABP for mean average is –3°F; the correction for MABP is –5°F. Note that for narrow-boiling fractions, all boiling points approach the volumetric average. Then, MeABP = 415°F and MABP is 413°F.

From Eq. 23-15, the pseudo-critical pressure is:

$T = 415 + 460 = 875\ °R$

S for 41° API $= 141.5/(131.5 + 41) = 0.871$

$$P_{pc} = 3.12281(10^9)\,(875)^{-2.3125}(0.871)^{2.3201} = 356 \text{ psia}$$

From Eq 23-16, the pseudo-critical temperature is:

$$T_{pc} = 24.2787(875)^{0.58848}(0.871)^{0.3596} = 1244\ °R$$

$$\omega = \frac{3}{7}\left[\frac{\log\ (356) - \log\ (14.7)}{(1244/875) - 1.0}\right] - 1.0 = 0.407$$

Vapor Pressure

The vapor pressures of light hydrocarbons and some common inorganics in the temperature range below 100°F appear in Fig. 23-19. Vapor pressures at higher temperatures, up to 600°F, are in Fig. 23-20 for the same compounds. Note that, except for ethylene and propylene, the hydrocarbons are all normal paraffins.

VISCOSITY

Figures 23-21 through 23-29 give the viscosity of hydrocarbon liquids and vapors, water, steam, and miscellaneous gases. Figure 23-21 gives data on hydrocarbon liquids. Figures 23-22, 23-23 and 23-24 present data on hydrocarbon gases. To correct for pressure, adjust the gas viscosity from Fig. 23-22 from atmospheric pressure using Fig. 23-24, or read directly

FIG. 23-19

Low-Temperature Vapor Pressures for Light Hydrocarbons

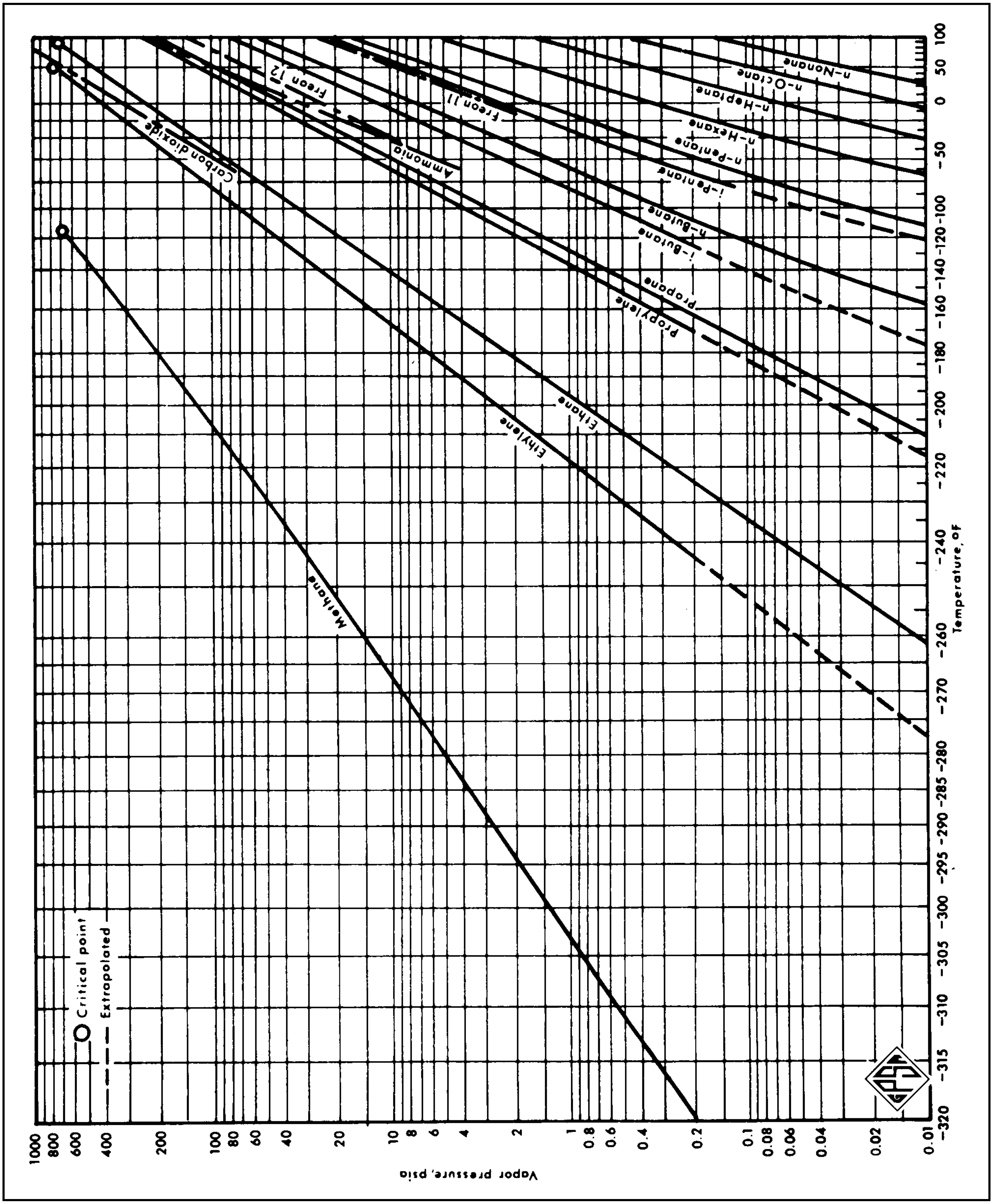

FIG. 23-20

High-Temperature Vapor Pressures for Light Hydrocarbons

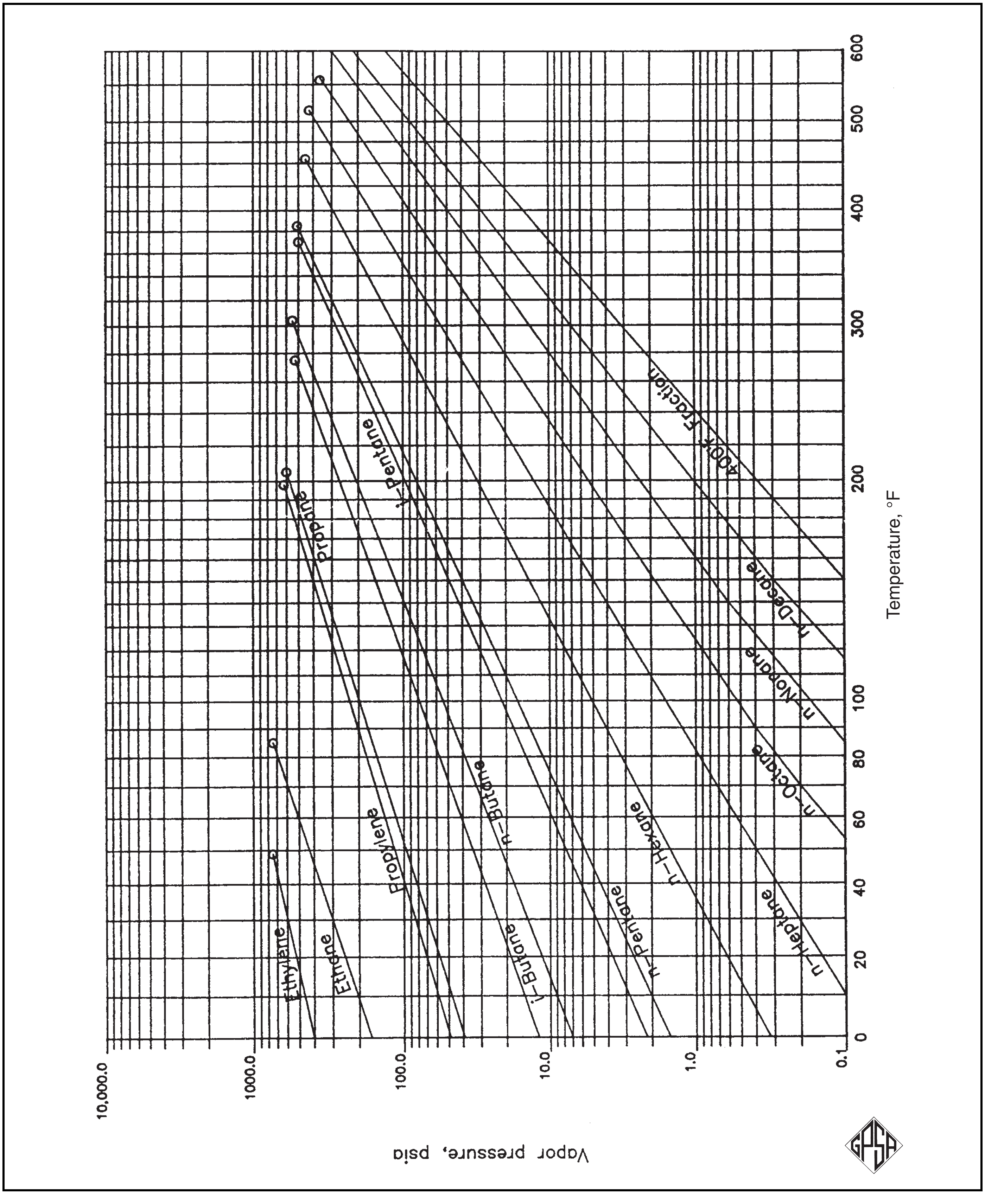

FIG. 23-21

Viscosities of Hydrocarbon Liquids

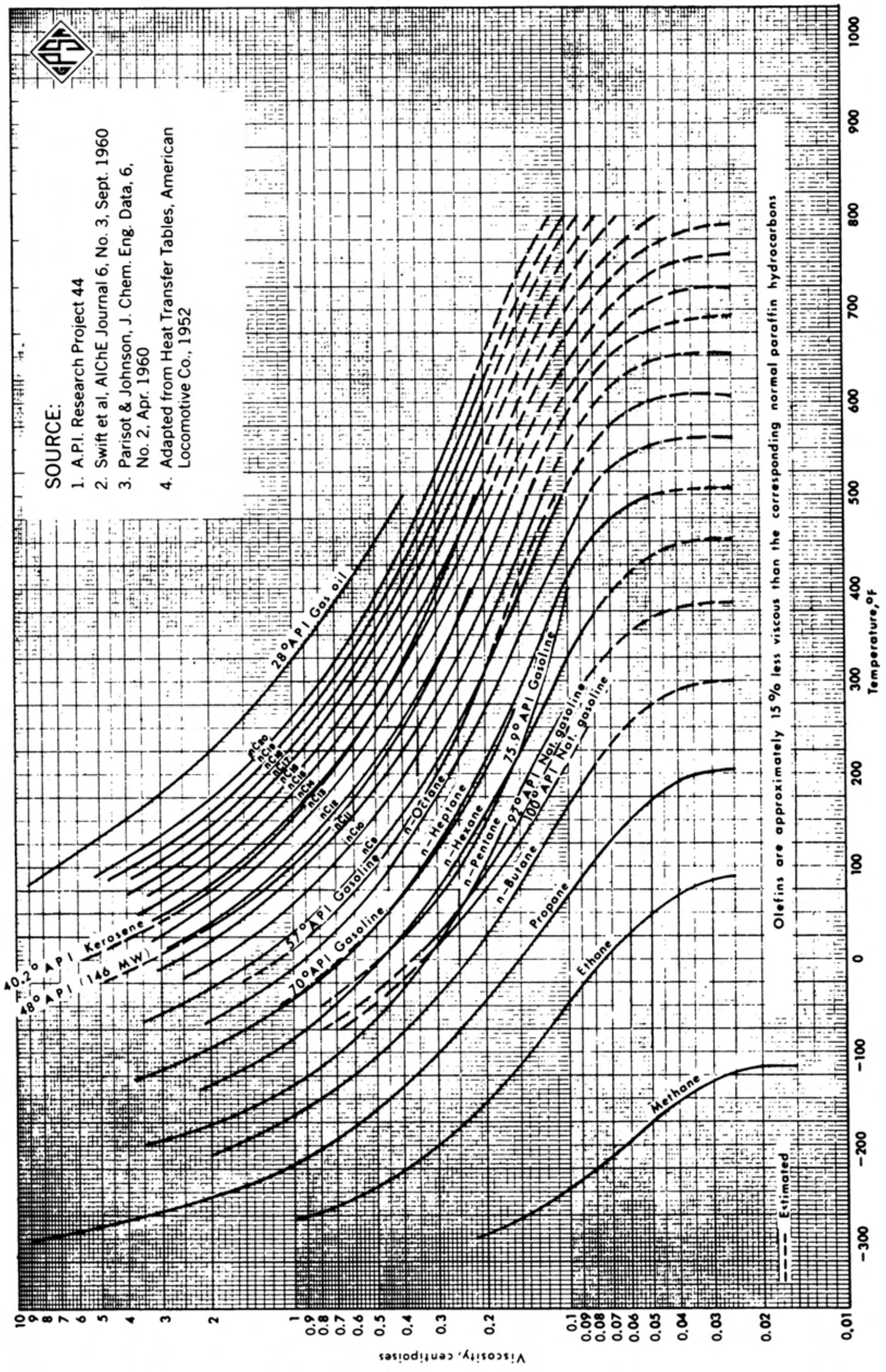

FIG. 23-22

Viscosity of Paraffin Hydrocarbon Gases at One Atmosphere

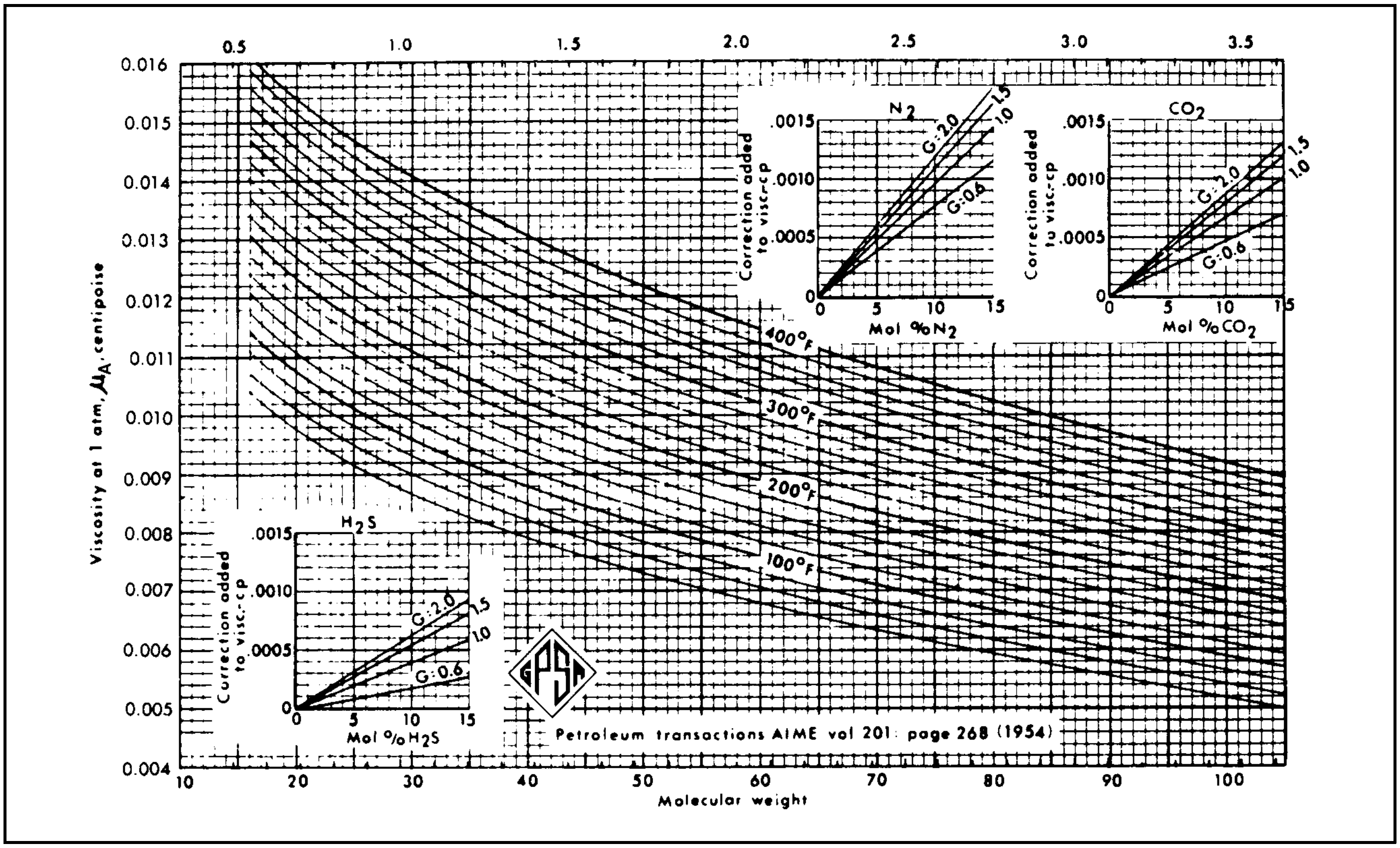

from Fig. 23-23. Figure 23-24 is better when the reduced temperature is greater than 1.0. Figure 23-28 gives the viscosity of hydrocarbon liquids containing dissolved gases. Note that Fig. 1-7 gives conversion factors for viscosity.

Calculation of Gas Mixture Viscosity

Example 23-8 — Determine the viscosity of a gas at 1,000 psia and 100 °F with the properties: MW = 22, T_c = 409°R, P_c = 665 psia.

Solution Steps

$G^{id} = 22/28.9625 = 0.760$

From Fig. 23-22 at 100 °F:

$\mu_A = 0.0105$ centipoise

Then:

$$T_r = \frac{100 + 459.67}{409} = 1.37 \qquad P_r = \frac{1000}{665} = 1.50$$

Note: If the composition of the gas is available, calculate the pseudo-critical temperatures and pressures as outlined in this section.

Because $T_r > 1.0$, Fig. 23-24 is better than Fig. 23-23 to obtain the correction for elevated pressure to the viscosity at one atmosphere.

From Fig. 23-24:

$\mu / \mu_A = 1.21$

Hence, the viscosity at 1000 psia and 100°F is:

$\mu = (1.21)\,(0.0105) = 0.0127$ centipoise

The method of Dean and Stiel[41] is best for calculating the viscosity of a gaseous mixture with large amounts of non-hydrocarbons. This method is particularly useful for handling natural gas with high CO_2 content. Compared to 30 CO_2-N_2 mixtures, this method has an average deviation of 1.21% at pressures up to 3525 psia. The method uses a factor, ξ, defined as:

$$\xi = 5.4402\left[\frac{T_{cm}^{1/6}}{P_{cm}^{2/3}\left(\sum_i y_i MW_i\right)^{1/2}}\right] \qquad \textbf{Eq 23-20}$$

If $T_r > 1.5$, then

$$\xi\mu_A = 166.8(10^{-5})(0.1338\, T_r - 0.0932)^{5/9} \qquad \textbf{Eq 23-21}$$

If $T_r \geq 1.5$,

$$\xi\mu_A = 34.0(10^{-5})\,(T_r^{8/9}) \qquad \textbf{Eq 23-22}$$

In either case, μ_A is $\xi\mu_A$ divided by ξ.

Equations 23-20 through 23-22 predict the viscosity of pure gases as well as mixtures. To apply the Dean and Stiel[41] method to mixtures, calculate the pseudo-critical volumes, Z-

FIG. 23-23

Hydrocarbon Gas Viscosity

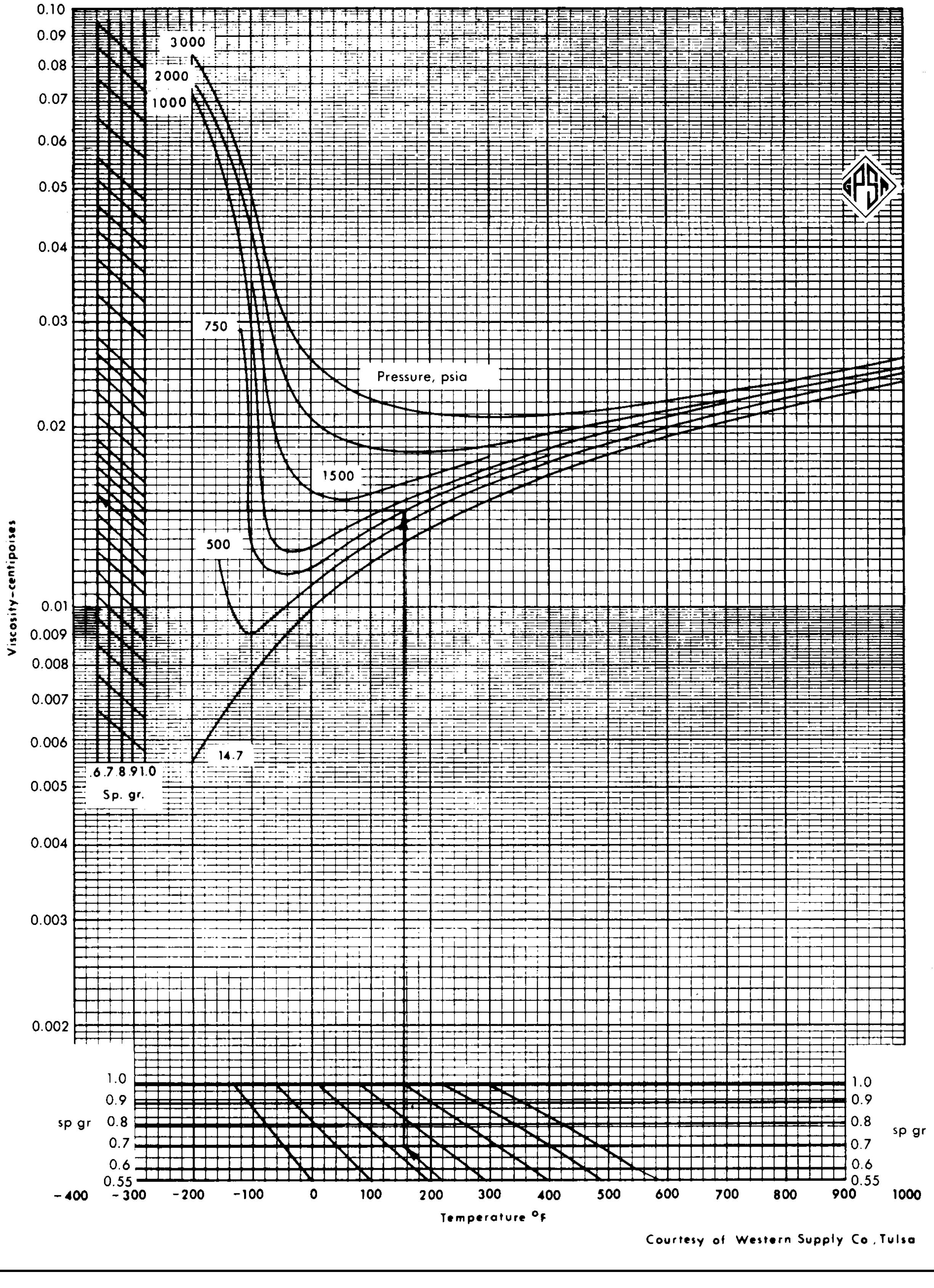

Courtesy of Western Supply Co., Tulsa

FIG. 23-24

Viscosity Ratio vs. Pseudoreduced Temperature

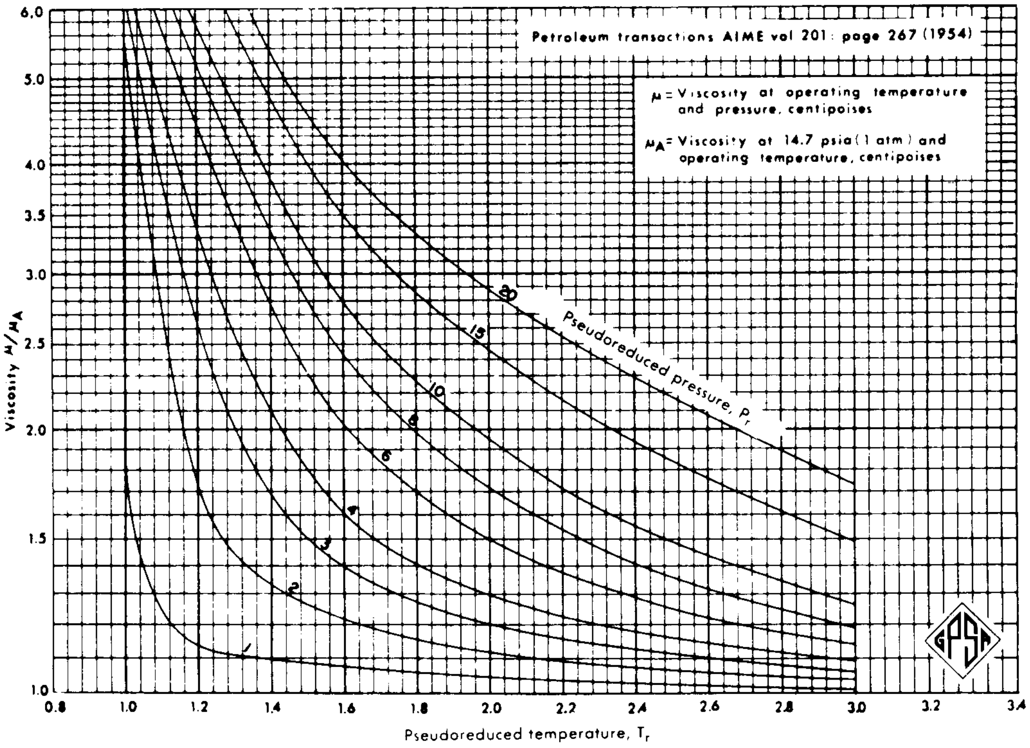

FIG. 23-25

Viscosity of Miscellaneous Gases – One Atmosphere

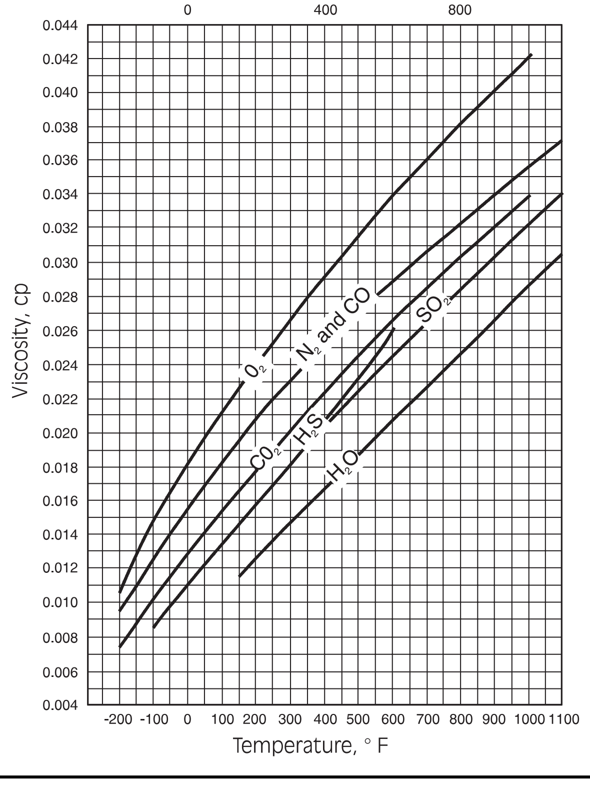

FIG. 23-26

Viscosity of Air[43, 44, 45]

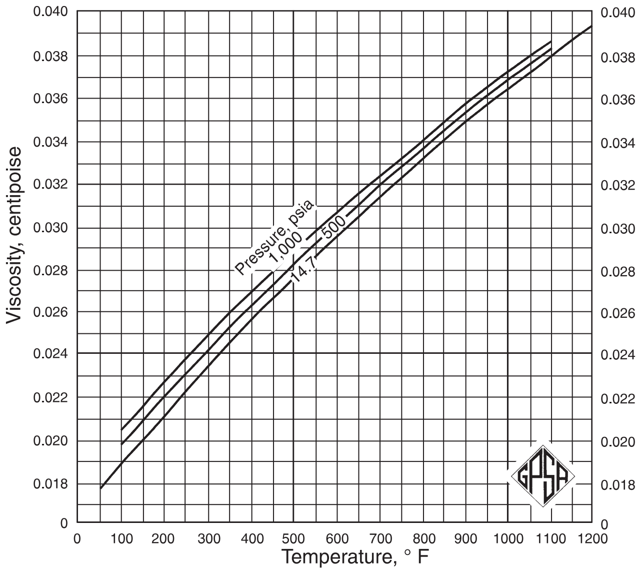

FIG. 23-27

Water Viscosity at Saturated Conditions

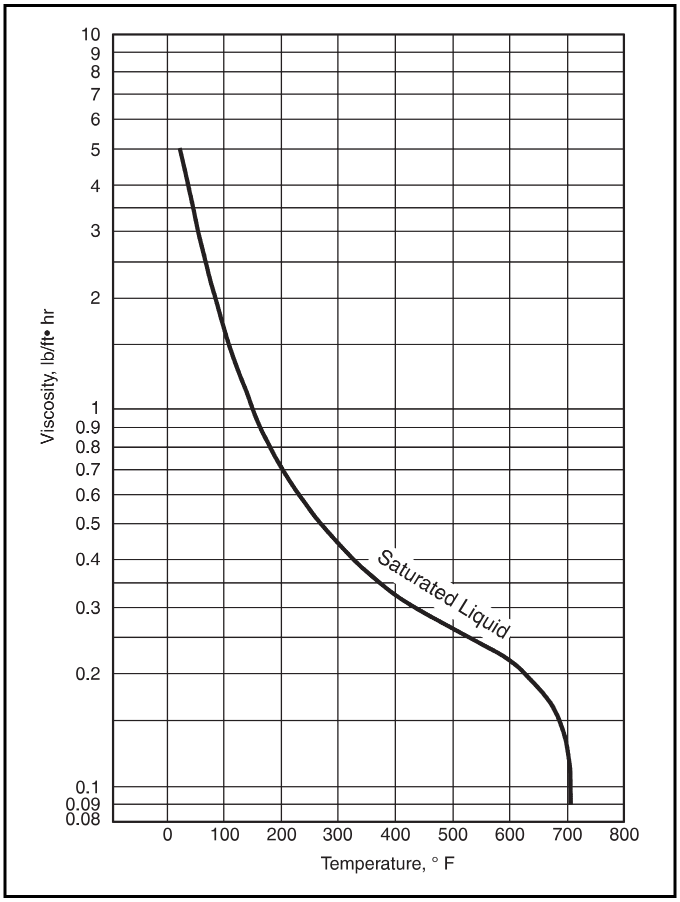

factors, and temperatures using the Prausnitz and Gunn[42] mixing rules:

$$V_{cm} = \sum_i y_i V_{ci} \qquad \textbf{Eq 23-23}$$

$$Z_{cm} = \sum_i y_i Z_{ci} \qquad \textbf{Eq 23-24}$$

$$T_{cm} = \sum_i y_i T_{ci} \qquad \textbf{Eq 23-25}$$

$$P_{cm} = \frac{Z_{cm} R T_{cm}}{V_{cm}} \qquad \textbf{Eq 23-26}$$

Example 23-9 — For a temperature of 50 °F and a pressure of 300 psia, estimate the viscosity of a mixture of 80 mol% methane, 15 mol% nitrogen, and 5 mol% carbon dioxide. Fig. 23-30 summarizes the calculations:

$P_{cm} = Z_{cm}RT_{cm}/V_{cm} = (0.2877)(10.73)(335.9)/1.562 =$ 663.4 psia

Substituting from the calculation table in Fig. 23-30 into Eq 23-20:

$$\xi = (5.4402)(335.9)^{1/6}/[(19.237)^{1/2}(663.4)^{2/3} = 0.043$$

$$T_r = T/T_{cm} = 509.7/335.9 = 1.517$$

Because $T_r > 1.5$, the expression for $\xi\mu_A$ is Eq 23-21.

$$\begin{aligned}\xi\mu_A &= 166.8(10^{-5})(0.1338\ T_r - 0.0932)^{5/9}\\ &= 166.8(10^{-5})\ [(0.1338)\ (1.517)\ -0.0932]^{5/9}\\ &= 48.91(10^{-5})\end{aligned}$$

$\mu_A = 0.01138$ centipoise

Using Fig. 23-22 and correcting for the nitrogen and carbon dioxide content of this mixture gives $\mu_a = 0.0116$ cp. This is a good check. Had this example contained a 20% N_2 content, the N_2 range of Fig. 23-22 would be exceeded and dictate use of the Dean and Stiel method. When conditions fall within the limits of Fig. 23-23, use this figure and not the Dean and Stiel correlation.

Viscosity of Petroleum Fractions

Mid-Boiling Point Method — The viscosity of a crude oil or crude oil fraction can be estimated if the mid-boiling point and gravity are known:

Mid-boiling point is defined as the boiling point at 50% volume distilled.

$$\eta = A{\bullet}e^{(1.8B/T)} \qquad \textbf{Eq 23-27}$$

$$A = (101.78T_b^{-0.175} - 29.263)K_W/B \qquad \textbf{Eq 23-28}$$

$$\text{In}\ (B) = 4.717 + 0.00292\ T_b \qquad \textbf{Eq 23-29}$$

Example 23-10 — At 100°F and 210°F find the viscosity of a heavy condensate having a mid-boiling point of 325°F and a specific gravity of 0.7688.

Solution Steps

$$K_W = \frac{\sqrt[3]{325 + 459.67}}{0.7688} = 11.99$$

$$\ln(B) = 4.717 + 0.00292(325 + 459.67) = 7.01$$

$$B = 1105.7$$

$$\begin{aligned}A &= [\ 101.78(325 + 459.67)^{-0.175} - 29.263](11.99/1105.3)\\ &= 0.02645\end{aligned}$$

The same constants apply at 100°F and at 210°F.

$$h = 0.02645{\bullet}e^{[1.8(1105.7)/559.67\ ]} = 0.926 \text{ cs at } 100°\text{F}$$

$$h = 0.02645{\bullet}e^{[1.8(1105.7)/669.67\ ]} = 0.517 \text{ cs at } 210°\text{F}$$

The reported experimental values are 0.93 and 0.52 centistokes, respectively.

THERMAL CONDUCTIVITY

Thermal conductivity for natural gas mixtures at elevated pressure can be calculated from an atmospheric value and a pressure correction. Figs. 23-31 through 23-36 present low pressure thermal conductivity data for gases developed from published data[51, 54]. The pressure correction of Lenoir *et al.*[52] shown in Fig. 23-32 applies to these low pressure data. The thermal conductivity of liquid paraffin hydrocarbons appears in Fig. 23-35 and the thermal conductivity of liquid petroleum fractions appears in Fig. 23-36.

Example 23-11 — Find the thermal conductivity of a natural gas at 700 psia and 300 °F with properties MW = 25, $T_c = 440$ °R and $P_c = 660$ psia.

Solution Steps

From Fig. 23-31, at 300°F:

FIG. 23-28

Liquid Viscosity of Pure and Mixed Hydrocarbons Containing Dissolved Gases at 100°F and One Atmosphere

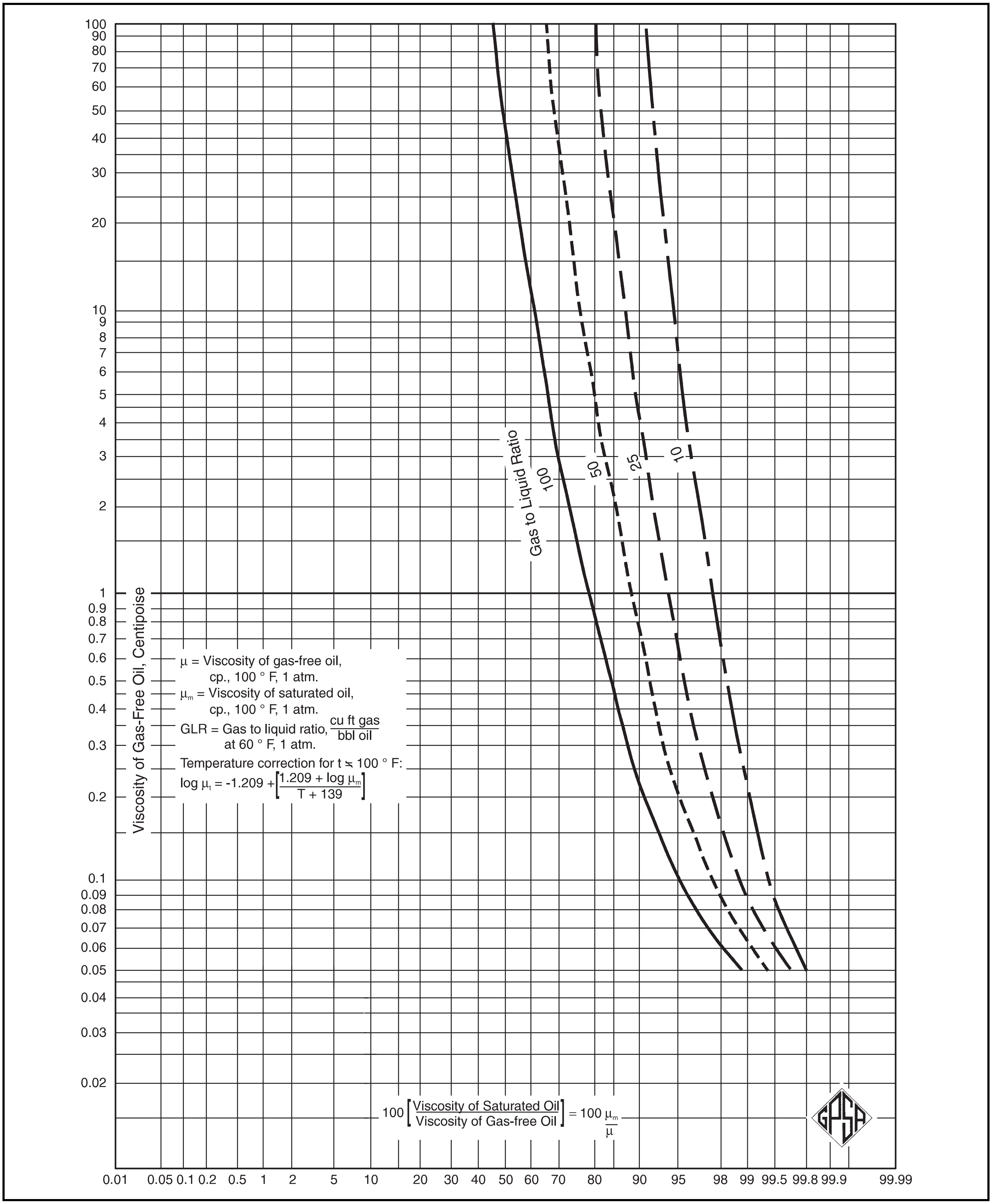

FIG. 23-29

Viscosity of Steam[46, 47]

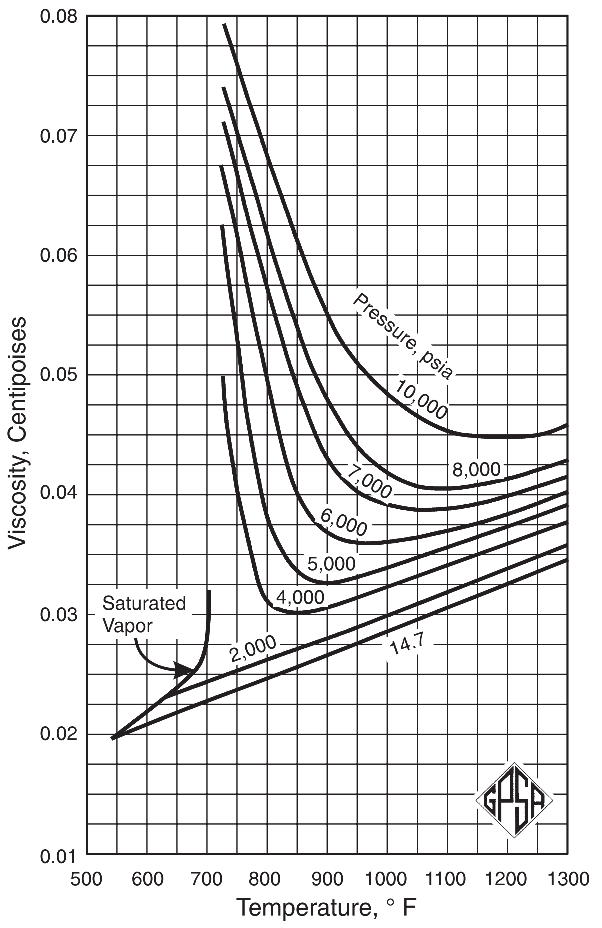

$k_A = 0.0248$ Btu/[(hr ft^2 °F)/ft]

$T_r = (300 + 459.67)/440 = 1.73$

$P_r = 700/660 = 1.06$

From Fig. 23-32:

$k/k_A = 1.15$

$k = (1.15)(0.0248) = 0.0285$ Btu/[(hr ft^2 °F)/ft]

Stiel and Thodos[53] present another method for estimating thermal conductivity. To determine the thermal conductivity of a gaseous mixture of defined components, the thermal conductivity of each component at the given temperature is read from the charts provided and the thermal conductivity of the mixture is determined by the "cube root rule[56]." This rule is applicable to mixtures of simple gases; it does not apply to mixtures containing CO_2 because its thermal conductivity goes through a maximum.

$$k_m = \frac{\sum_i y_i k_i \sqrt[3]{MW_i}}{\sum_i y_i \sqrt[3]{MW_i}} \qquad \textbf{Eq 23-30}$$

Compared to 17 systems[56], the cube root rule has an average deviation of 2.7%. The method of Li[55] based upon volume fractions works best for the thermal conductivity of a liquid mixture.

Example 23-12 — Find the thermal conductivity of the gaseous mixture shown in Fig. 23-37 at 200 °F and one atmosphere.

$k_m = 0.05774/2.822 = 0.0205$ Btu/[(hr ft^2 °F)/ft]

TRANSPORT PROPERTY REFERENCES

No simple correlations exist for the transport properties of viscosity and thermal conductivity. For pure components, the best approach is a complicated equation with many constants that must be fit to experimental data, or extensive tables. Vargaftik[62] and Touloukian[65] each have extensive collections of experimental data.

SURFACE TENSION

The interior molecules of a liquid exert an inward force of attraction upon the surface molecules that tends to minimize the surface area of the liquid. The work required to enlarge the surface area by one square centimeter is the surface free energy. The perpendicular force in the liquid surface, called surface tension, exerts a force parallel to the plane of the surface. Surface tension is an important property for wetting, foaming, emulsification, and droplet formation and is used in the design of fractionators, absorbers, two-phase pipelines, and in reservoir calculations.

Pure Components

Figure 23-38 provides the surface tension of pure hydrocarbons as a function of temperature.

Mixtures

Surface tension for binaries of known composition at or near amospheric pressure may be calculated[78] using:

FIG. 23-30

Calculation of Viscosity of a Gas Mixture

	Mole Fraction, y_i	Molecular Weight, MW_i	Pci, psia	T_{ci}, °R	V_{ci}, ft^3/lb	$V_{ci} = MW_i \bullet v_{ci}$ ft^3/lb mole	$Z_{ci} = \frac{P_{ci} \bullet V_{ci}}{10.73 \bullet T_{ci}}$
CH_4	0.80	16.043	667.0	343.0	0.0988	1.59	0.2882
N_2	0.15	28.013	492.8	227.2	0.0510	1.43	0.2891
CO_2	0.05	44.010	1069.5	547.4	0.0342	1.51	0.2749
Mixture	1.00	19.237	—	335.9	—	1.562	0.2877
	Σ	$MW_{cm} = \Sigma y_i \bullet MW_i$		$T_{cm} = \Sigma y_i \bullet T_{ci}$		$V_{cm} = \Sigma y_i \bullet V_{ci}$	$Z_{cm} = \Sigma y_i \bullet Z_{ci}$

FIG. 23-31

Thermal Conductivity of Natural and Hydrocarbon Gases at One Atmosphere (14.696 psia)

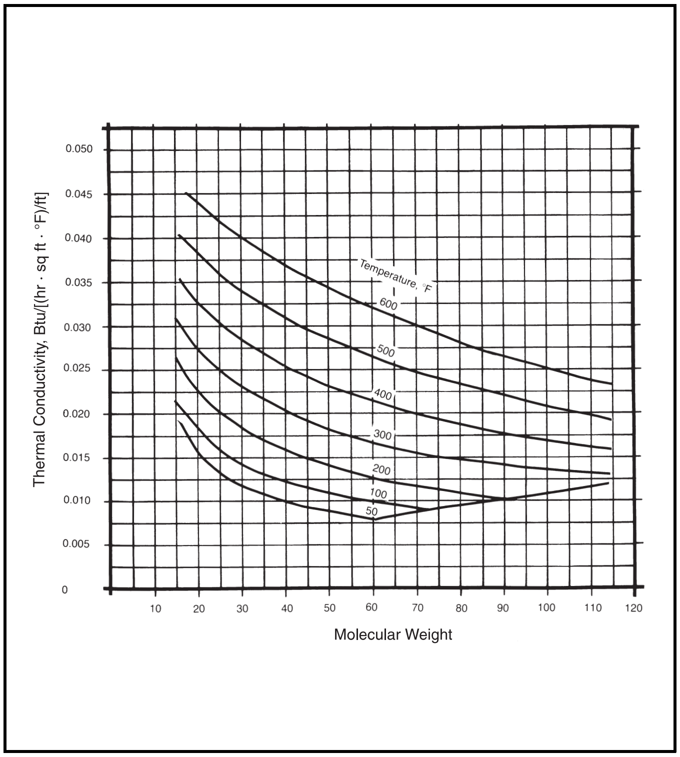

FIG. 23-32

Thermal Conductivity Ratio for Gases

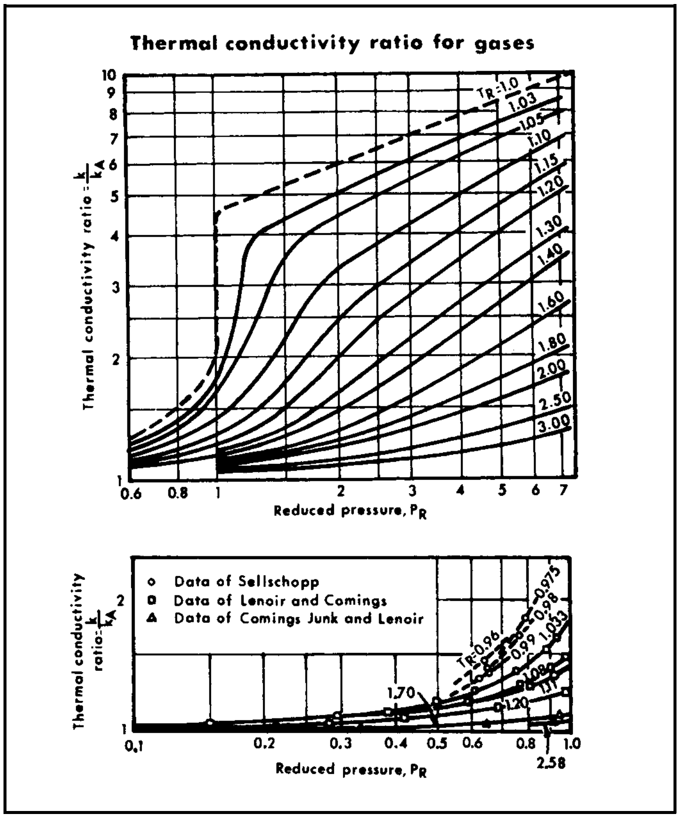

FIG. 23-33

Thermal Conductivity of Miscellaneous Gases at One Atmosphere[59, 60, 61, 62]

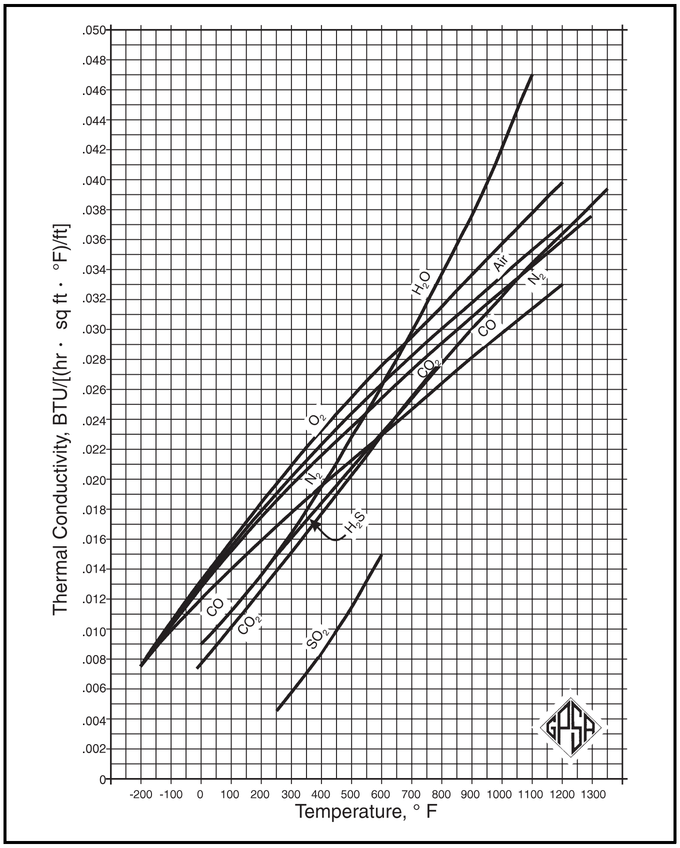

FIG. 23-34

Thermal Conductivity of Hydrocarbon Gases at One Atmosphere[67, 68, 69]

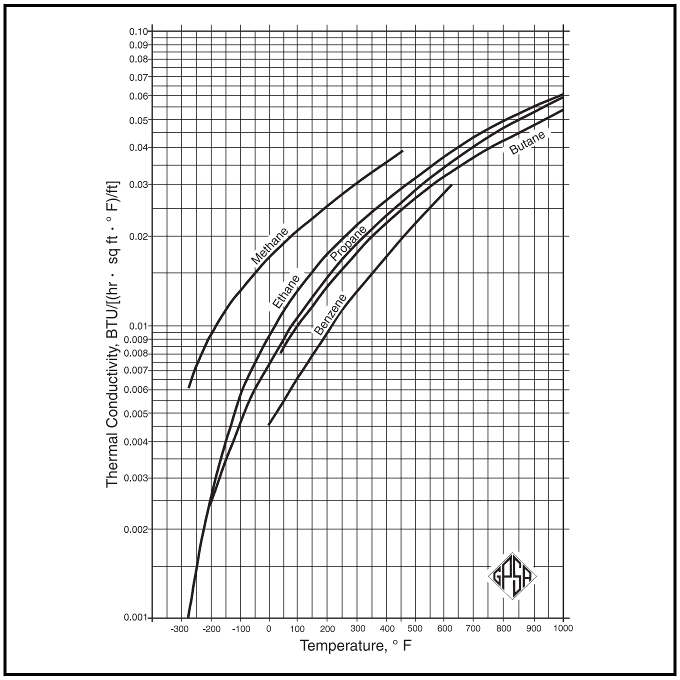

FIG. 23-35

Thermal Conductivity of Liquid Paraffin Hydrocarbons

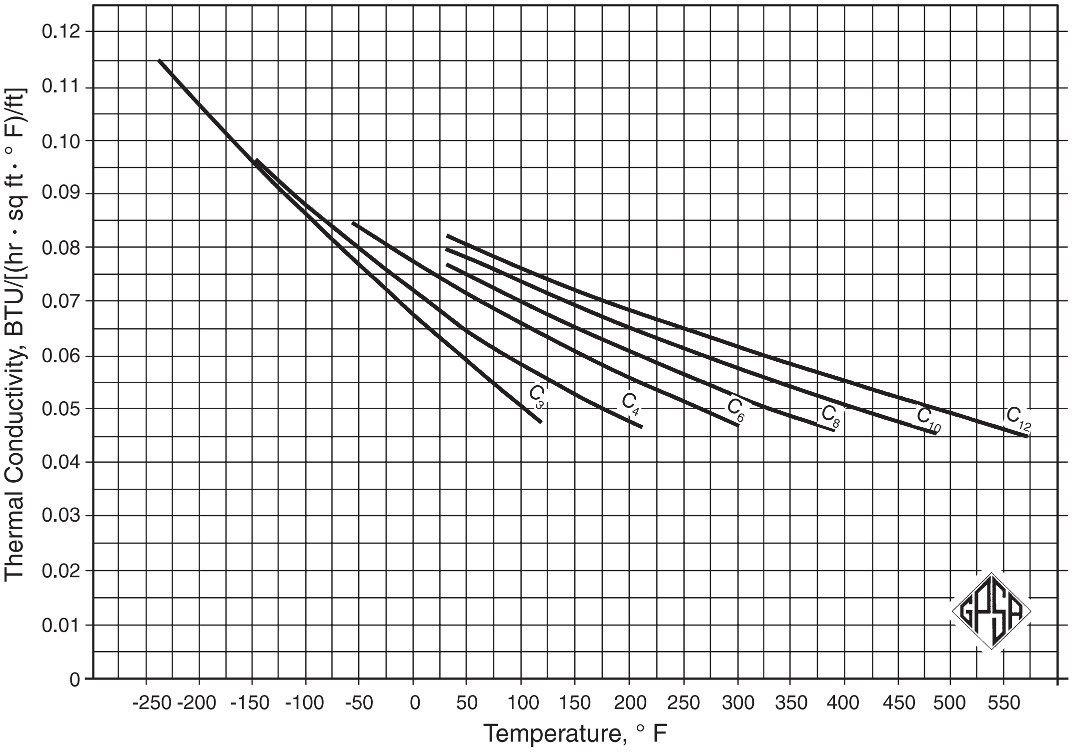

FIG. 23-36

Thermal Conductivity of Liquid Petroleum Fractions[58]

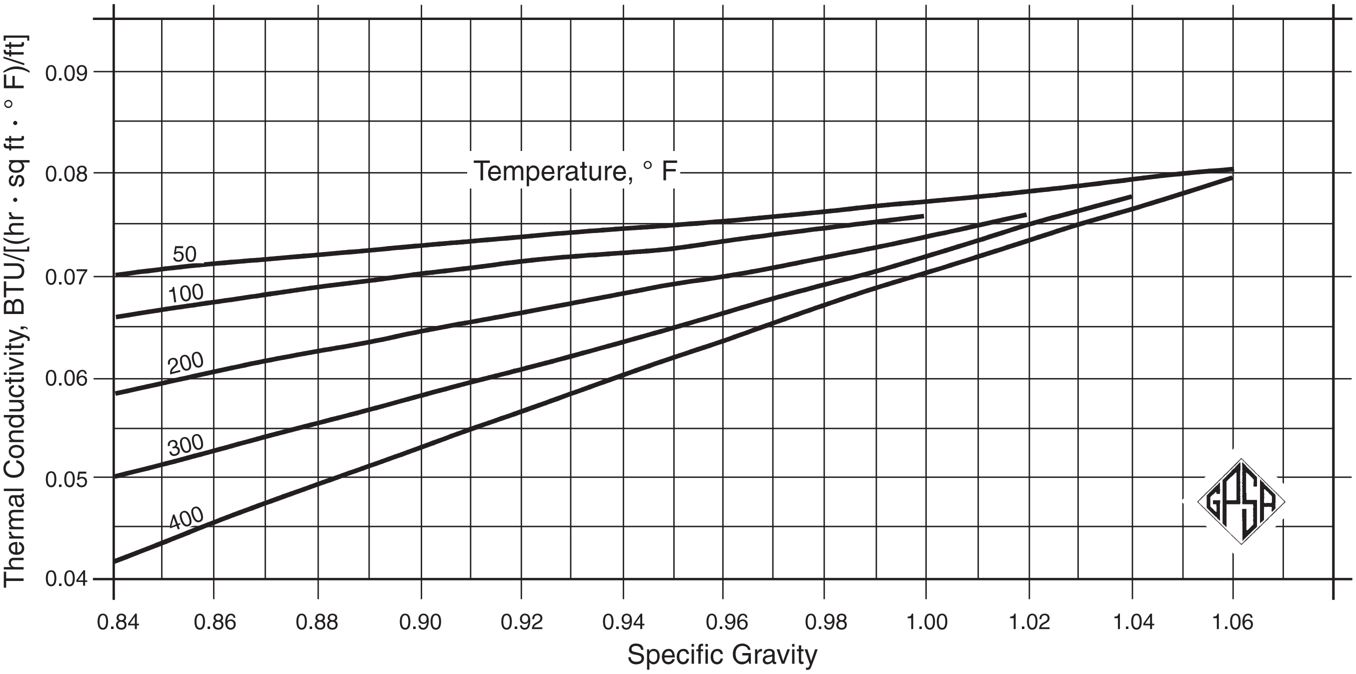

$$\sigma_m = (\sigma_1\sigma_2)/(\sigma_1 x_2 + \sigma_2 x_1) \qquad \textbf{Eq 23-31}$$

The presence of inert gases, such as N_2 and CO_2, in the liquid phase tends to lower the surface tension of the liquid. When the concentration of inert gases in the liquid exceeds 1.0 mol%, estimated values of surface tension may be 5 to 20% higher than actual values for the mixture.

GROSS HEATING VALUE OF NATURAL GASES

A complete compositional analysis of the mixture permits calculation of the gross heating value, specific gravity, and Z-factor of a natural gas mixture. Some definitions are in order before starting this discussion. It is necessary to understand the concepts: real gas, ideal gas, gross heating value (higher heating value, higher calorific value), net heating value (lower heating value, lower calorific value), hypothetical state.

Real Gas — refers to an actual fluid in its vapor phase. It is possible to collect samples of these fluids and to measure their thermophysical properties.

Hypothetical State — refers to a definition of a fluid in a state that cannot actually exist, e.g. methane as a liquid at 60 °F and 14.696 psia. Methane cannot be in its liquid phase at this temperature and pressure, but such a state, when defined, can be used in calculations. Unfortunately, it is not possible to find an unambiguously suitable numerical value for methane properties at these conditions.

Ideal Gas — refers to a hypothetical state in which a fluid behaves in a particularly simple manner. A simple equation of state describes an ideal gas exactly. The ideal gas is a useful concept even if the state cannot be achieved because an unambiguous path exists to reach the state starting with a real fluid.

Gross Heating Value — by definition is the total energy transferred as heat in an ideal combustion reaction at a standard temperature and pressure in which all water formed appears as liquid. The gross heating is an ideal gas property in a hypothetical state (the water cannot all condense to liquid because some of the water would saturate the CO_2 in the products):

$$Hv^{id} = \sum_i y_i Hv_i^{id} \qquad \textbf{Eq 23-32}$$

Values for Hv^{id} and MW_i are in Fig. 23-2.

Calculation of the ideal energy flow requires multiplication of the gross heating value by the ideal gas volumetric flow rate of gas for the time period. To employ a real gas flow to calculate the ideal energy flow requires converting the real gas flow rate to the ideal gas flow rate by dividing by the Z-factor. Often the heating value Hv^{id} appears in tables divided by the Z-factor in preparation for multiplying by the real gas flow rate. Thus, Hv^{id}/Z is the ideal gross heating value per unit volume of real gas. Note that the Z-factor must be determined for the natural gas mixture and then divided into the gross heating value of the mixture. It is not correct to divide each pure component gross heating value by the pure component Z-factor and then take the molar average.

Net Heating Value — by definition is the total energy transferred as heat in an ideal combustion reaction at a standard temperature and pressure in which all water formed appears as vapor. The net heating is an ideal gas property in a hypothetical state (the water cannot all remain vapor because, after the water saturates the CO_2 in the products, the rest would condense). It is a common misconception that the net heating value applies to industrial operations such as fired heaters and boilers. While the flue gases from these operations do not condense, the net heating value does not apply directly because the gases are not at 60°F. Were the gases to cool to 60°F, some of the water would condense while the remainder would saturate the gases. It is possible to use either the gross or net heating value in such situations taking care to utilize the hypothetical state properly.

Cost of Gas — comes from a simple accounting equation

$$c = \dot{V}^{id} Hv^{id} p^{id} \Delta t = \dot{V} Hv p \Delta t \qquad \textbf{Eq 23-33}$$

This equation shows that for custody transfer it is not necessary to use real gas heating values (real gas heating values could be calculated from the ideal gas values using well known, but computationally intense methods). If the price is set by contract, it is possible to set either a real gas price or an ideal gas price. For the former, it is necessary to use real gas values; for the latter, the ideal gas values are correct. Because it is much simpler to obtain the ideal gas values, it is preferable to establish contracts based upon the ideal gas values. The ideal gas flow rate comes from the real gas flow rate

$$\dot{V}^{id} = \dot{V}/Z \qquad \textbf{Eq 23-34}$$

because the Z-Factor is the ratio of the real gas volume to the ideal gas volume.

This paragraph represents the justification for using the GPA property tables for custody transfer. The GPA tables present ideal gas properties that are more accurate to use in mixture calculations and easier to present in tables than real gas properties.

Z-Factor — when dealing with custody transfer of natural gas, it is common to use a simple equation of state for calculations because the base pressure (at which transfer occurs by definition) is near atmospheric. The equation is

$$Z = 1 + BP / RT \qquad \textbf{Eq 23-35}$$

It is common to assume that

$$-B/RT = \left[\sum_{i=1}^{N} x_i b_i\right]^2 \qquad \textbf{Eq 23-36}$$

and

$$b_i = \sqrt{-B / RT} \qquad \textbf{Eq 23-37}$$

This Z-Factor is sufficiently accurate at low pressure for calculations involving natural gas mixtures.

Specific gravity (also termed relative density or gas gravity) – by definition is the ratio of gas density (at the temperature and pressure of the gas) to the density of dry air (at the air temperature and pressure).

$$G = \rho / \rho_a = (PT_a Z_a / P_a TZ)\,(MW / MW_a) \qquad \textbf{Eq 23-38}$$

The ideal gas specific gravity is the ratio of the molecular weight of the gas to the molecular weight of dry air.

$$G^{id} = MW/MW_a$$

For a mixture

$$G^{id} = \sum_i y_i G_i^{id} \qquad \textbf{Eq 23-39}$$

FIG. 23-37

Calculation of Thermal Conductivity

Component	Mole Fraction	Thermal Conductivity Btu/[(hr • sq ft • °F)/ft]	Molecular Weight	$\sqrt[3]{MW_i}$	$(y_i \sqrt[3]{MW_i})$	$(y_i k_i \sqrt[3]{MW_i})$
CO_2	0.10	0.0127	44.010	3.530	0.3530	0.00448
H_2S	0.20	0.0136	34.076	3.242	0.6484	0.00882
N_2	0.05	0.0175	28.013	3.037	0.1519	0.00266
CH_4	0.60	0.0258	16.043	2.522	1.5132	0.03904
C_2H_6	0.05	0.0176	30.070	3.109	0.1555	0.00274
Total	1.00				2.8220	0.05774

FIG. 23-38

Surface Tension of Paraffin Hydrocarbons[85]

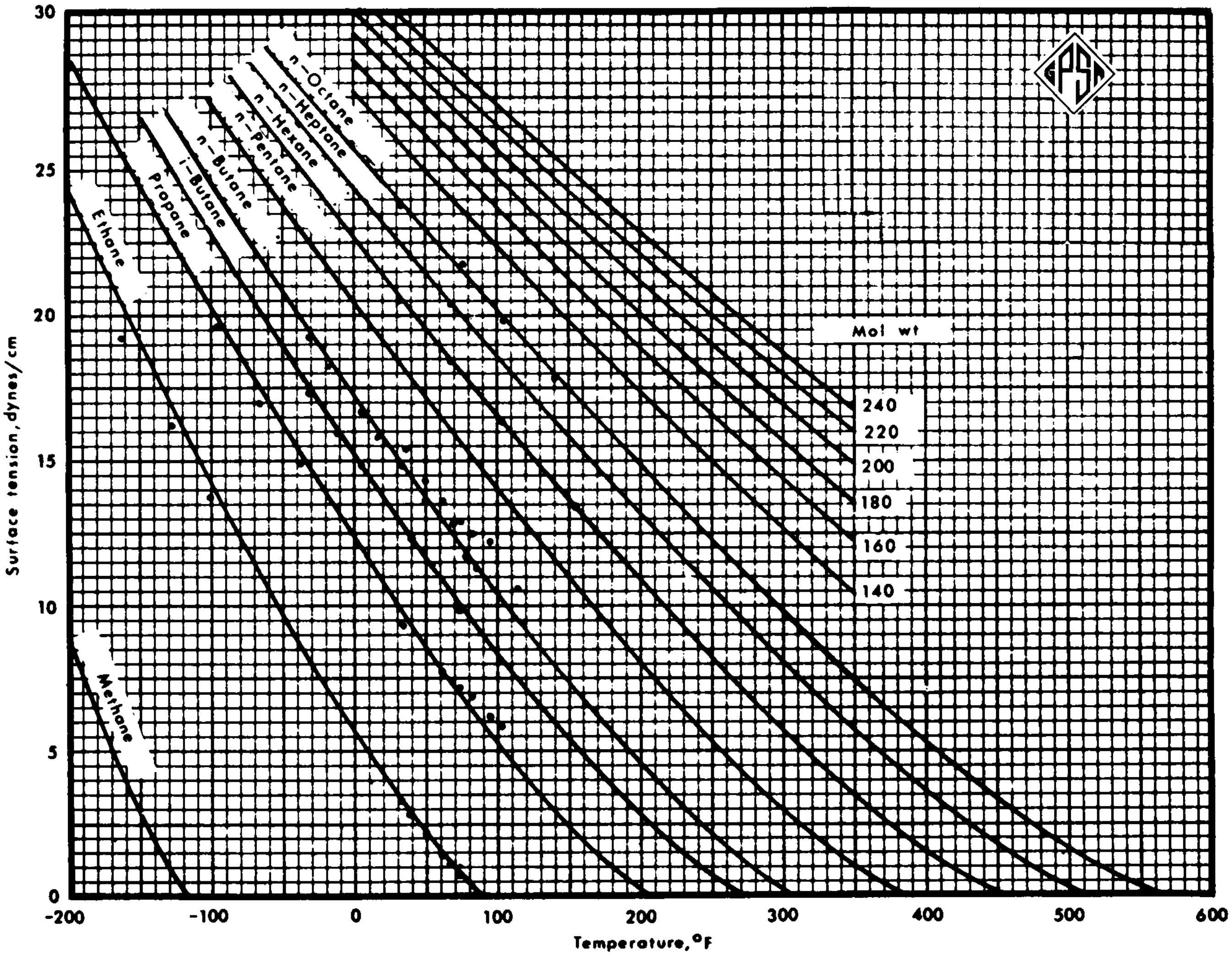

The specific gravity G is measured and is generally used to calculate the molecular weight ratio G^{id} when the gas composition is not available.

$$G^{id} = MW/MW_a = GP_aTZ / PT_aZ_a \qquad \textbf{Eq 23-40}$$

The temperatures and pressures used must correspond to actual measurement conditions or serious errors in G^{id} can occur.

Corrections for Water Content — When the gas contains water, but the component analysis is on a dry basis, the component analysis must be adjusted to reflect the presence of water. The mole fraction of water in the mixture is estimated from the definition of relative humidity:

$$y_w = h^g P_w^\sigma / P = n_w / (1 + n_w)$$
$$\text{(on a one mole basis)} \qquad \textbf{Eq 23-41}$$

where h^g is the relative humidity of the gas ($h^g = 1$ for saturated gas). Rearranging Eq 23-41 for the moles of water:

$$n_w = y_w / (1 + y_w) \qquad \textbf{Eq 23-42}$$

Then, the corrected mole fractions of the gas become:

$$y_i(\text{cor}) = y_i\left[\frac{1}{1 + n_w}\right] = y_i\left[\frac{1}{1 + y_w/(1\ \ y_{w)}}\right] = (1 - y_w)y_i \qquad \textbf{Eq 23-43}$$

and the gross heating value becomes:

$$Hv^{id} = (1 - y_w)\sum_i y_i Hv_i^{id} \qquad \textbf{Eq 23-44}$$

If the compositional analysis determines water as a component, and the summation contains the water term, the heating value becomes:

$$Hv^{id} = \sum_i y_i Hv_i^{id} - y_w\, Hv_w^{id} \qquad \textbf{Eq 23-45}$$

We remove the effect of water because, although water has a heating value (the ideal enthalpy of condensation), we assume that the water carried by wet gas (spectator water) does not condense while we assume that the water formed by the reaction does condense.

Accounting for water using Eqs 23-41 through Eq 23-45 is sufficient for custody transfer purposes because the contracting parties can agree to accept the hypothetical state for the gross heating value. When trying to model actual situations, the question becomes more complex. It is obvious that all the water formed in a reaction cannot condense because in a situation in which both air and gas are dry, some of the reaction water must saturate the product gases while the remainder condenses. It is possible to account for these effects, but those interested should consult GPA Standard 2172, "Calculation of Gross Heating Value, Relative Density and Compressibility Factor for Natural Gas Mixtures from Compositional Analysis," for the analysis. This standard contains additional details and examples covering all these calculation methods. GPA 2172 contains a listing of the Basic source code for a computer program to perform the calculations.

FIG. 23-39

Specific Heat for 0.58 Specific gravity gas (16.7 MW)

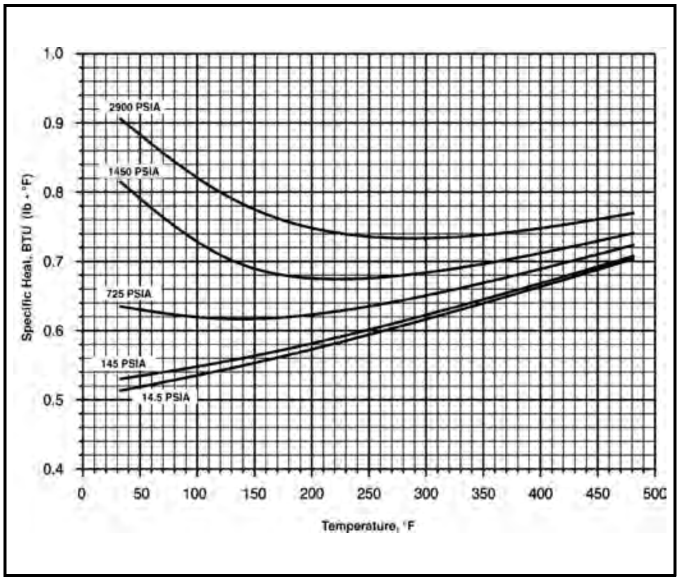

FIG. 23-40

Specific Heat for 0.75 Specific gravity gas (21.6 MW)

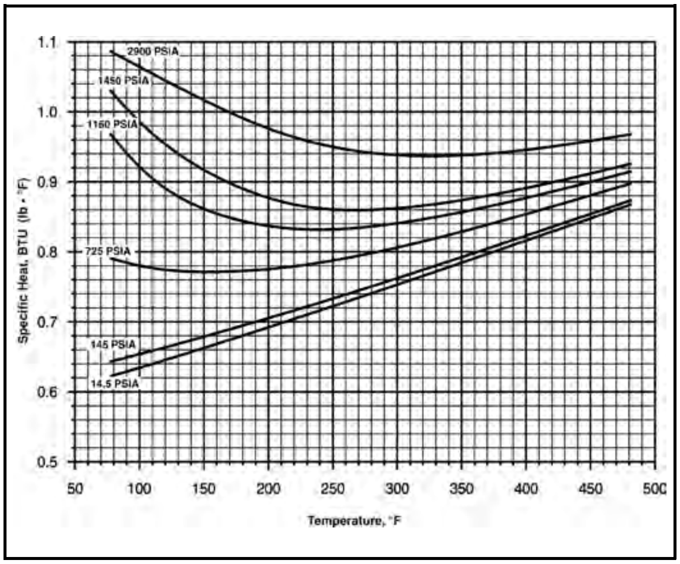

SPECIFIC HEAT

Figs. 23-39 and 23-40 present specific heat curves for two different gas mixtures. These curves are not based on experimental data but were developed using calculated values from a process simulator. These charts should give reasonable results for quick calculations of sensible heating/cooling.

REFERENCES

1. Standing, M. B. and Katz, D. L., "Density of Natural Gases," Trans. AIME 142 (1942).
2. Pitzer, K. S., et al., J. Am. Chem. Soc. 77, 3433 (1955).
3. Wichert, E. and Aziz, K., Hyd. Proc. 51, 199 (May, 1972).
4. Hall, K. R. and Yarborough, L., Oil Gas J. 71, No. 25, 82 (June 18, 1973).
5. Hall, K. R. and Yarborough, L., Oil Gas J. 72, No. 7, 86 (Feb. 18, 1974).
6. Robinson, R. L., Jr. and Jacoby, R. H., Hyd. Proc. 44, 141 (April, 1965).
7. Benedict, M., Webb, G. B., and Rubin, L. C., Chem. Eng. Prog. 47, No. 8, 419 (1951).
8. Starling, K. E. and Han, M. S., Hyd. Proc. 50, 129 (March, 1971).
9. Hopke, S. W. and Lin, C. J., 76th Nat'l AIChE Meeting, Tulsa, Oklahoma, March, 1974.
10. George, B. A., Proc. 61st Ann. Conv. GPA, Dallas, Texas, p. 171 (March 15-17, 1982).
11. Brown, G. G., Katz, D. L., Oberfell, G. G., and Alden, R. C., "Natural Gasoline and the Volatile Hydrocarbons," Natural Gas Assoc. of America, Tulsa, Oklahoma, 1948.
12. API Research Project 44, "Selected Values of Properties of Hydrocarbons and Related Compounds," Thermodynamic Research Center, Texas A&M University.
13. Starling, K. E., "Fluid Thermodynamic Properties for Light Petroleum Systems," Gulf Publ. Co., Houston, 1973.
14. Physical Property Data Service, Institution of Chemical Engineers, 165-171 Railway Terrace, Rugby, Warwickshire, U.K.
15. TRAPP by J. F. Ely and H. J. M. Hanley, U.S. National Bureau of Standards, National Engineering Laboratory, Thermophysical Properties Division, Boulder, Colorado 80303 (1983).
16. Petercon, J. N., Chem, C. C., and Evans, L. B., Chem. Eng. 85, 79 (July 31, 1978).
17. Garrett, J. R., Chem. Eng. 90, 149 (March 7, 1983).
18. "AIChE Applications Software Survey for Personal Computers 1984," American Institute of Chemical Engineers, New York, NY, 1984.
19. Deam, J. R., Kellizy, I. K. and Maddox, R. N., "Calculating Density of Saturated Hydrocarbon Mixtures," Proc. 48th Ann. Conv. NGPA, Dallas, Texas, pp. 48-51 (March 1969).
20. Kay, W. B., J. Chem. Eng. Data, 15, 46 (1970).
21. Kay, W. B., Ind. Eng. Chem., 32, 353 (1940).
22. Gugnoni, R. J., Eldridge, J. W., Okay, V. C. and Lee, T. J., AIChE J. 20, 367 (1974).
23. Reamer, H. H., Sage, B. H., and Lacey, W. N., Ind. Eng. Chem., 43, 2515 (1951).
24. Sage, B. H. and Lacey, W. N., API Research Project 37 (1955).
25. Kay, W. B. and Price, D. B., Ind. Eng. Chem., 45, 615 (1953).
26. Kay, W. B. and Rambosek, G. M., Ind. Eng. Chem., 45, 221 (1953).
27. Bierlein, J. A. and Kay, W. B., Ind. Eng. Chem., 45, 618 (1953).
28. Arai, Y., Kaminishi, G. and Saito, S., J. Chem. Eng. of Japan, 4, No. 2, 113 (1971).
29. Chappelear, P. S., "Low Temperature Data from Rice University for Vapor-Liquid and P-V-T Behavior," GPSA TP-4 (April 1974).
30. Hiza, M. J. and Haynes, W. M., J. Chem. Thermodynamics, 9, 873 (1977).
31. Hiza, M. J. and Haynes, W. M., J. Chem. Thermodynamics, 12, 1 (1980).
32. Haynes, W. M. and Hiza, M. J., J. Chem. Thermodynamics, 12, 179 (1980).
33. Huang, E. T. S., Swift, G. W. and Kurata, F., AIChE J., 13, 846 (1967).
34. Gonzalez, M. H. and Lee, A. L., J. Chem. Eng. Data, 13, 172 (1968).
35. Turek, E. A., Metcalfe, R. S., Yarborough, L., and Robinson, R. L., DPE 9231 Presented at 55th Annual Fall Meeting of Soc. Pet. Engrs., Dallas, Sept. 21-24, 1980.
36. Technical Data Book – Petroleum Refining American Petroleum Inst., Washington, D.C. Procedures a: 4D4.1 (1980; b: 4D3.1 (1980); c: 4D3.2 (1980); d: 2B2.1.
37. Lee, B. I. and Kesler, M., AIChE J. 21, 510 (1975).
38. Edmister, W. C., Pet. Refiner, 37 (4), 173 (1958).
39. Smith and Watson, Courtesy of Brown and Root Inc.
40. Edmister, W. C., "Applied Thermodynamics," The Gulf Publishing Co., Houston, 1961.
41. Dean, D. E. and Stiel, L. I., AIChE J., 11, 526 (1965).
42. Prausnitz, J. M. and Gunn, R. D., AIChE J., 4, 430 (1958).
43. Granet, I., and Kass, P., Pet. Ref. 31 (10), 113 (1952).
44. Kester, J., and Leidenfrost, W., "Thermodynamic and Transport Properties of Gases, Liquids and Solids," p. 321, McGraw Hill Book Co., Inc., New York, NY, 1959.
45. Thermodynamic Properties Research Center Data Book 2 Table 2048 (December 1962), Purdue University, Lafayette, Indiana.
46. Saline Water Conversion Engineering Data Book, 2nd Ed., U.S. Dept. of the Interior, Washington, D.C., November 1971.
47. Kestin, J., and Wang, H. E., Physica 26, 575 (1960).
48. A.S.T.M. Standard Viscosity-Temperature Chart 0361-39 Nat. Bur. Stds. Circular C461 (1947).
49. Amin, M. B., and Maddox, R. N., Hyd. Proc. 59, 131 (December 1980).
50. Riazi, M., Prediction of Thermophysical Properties of Petroleum Fractions, PhD Thesis, Pennsylvania State University, pp. 44 et seq., August 1979.
51. "Self Consistent Correlation of Thermodynamic and Transport Properties," K. E. Starling, et al., GRI/AGA Project No. Br-111-1; OU-ORA Project No. 2036 156-716. Report: GR/AGA/BR-111-1/77-36.
52. Lenoir, J. M., Junk, W. A., and Comings, E. W., Chem. Eng. Progr., 49, 539 (1953).
53. Smith, W. J. S., Durbin, L. D., and Kobayashi, R., J. Chem. Eng. Data, 5, 316 (1960).
54. Katz, D. L., Cornell, D., Kobayashi, R., Poetmann, F. H., Vary, J. A., Elenbaas, J. R., and Weinaug, C. F., "Handbook of Natural Gas Engineering," McGraw-Hill, New York, 1959.
55. Li, C. C., AIChE J., 22, 927 (1976).
56. Friend, L., and Adler, S. B., "Transport Properties of Gases," pp. 128-131, Cambel and Fenn, Ed., Northwestern Univ. Press, Evanston, Illinois, 1958.
57. Engineering Science Data Unit. No. 75003, June, 1975.
58. Mallan, G. et al., J. Chem, Eng. Data 12, 412 (1972).
59. Hanley, H. J. M. and Ely, J. F., J. Phys. Chem. Ref. Data, 2, 735 (1973).
60. Harrath, A. L., "Physical Properties of Inorganic Compounds – SI Units," Crane, Russak and Co., Inc., New York, 1975.

61. Vasserman, A. A., Kazarchinski, Ya Z. and Rabinovich, V. A., "Thermophysical Properties of Air and Air Compounds," pp. 356-70, U.S. Dept. of Commerce, Springfield, VA, 1971.
62. Vargaftik, N. B., "Tables on the Thermophysical Properties of Liquids and Gases," 2nd Ed., p. 208, p. 346, John Wiley & Sons, New York, NY, 1975.
63. Carmichael, L. T., and Sage, B. H., J. Chem. Eng. Data, 9, 501 (1964).
64. Kramer, F. R. and Comings, E. W., J. Chem. Eng. Data 5, 462 (1960).
65. Touloukian, Y. S., Liley, P. E., and Saxena, S. C., "Thermal Conductivity Nonmetallic Liquids and Gases," Thermophysical Properties of Matter, Vol. 3, IFI/Plenum, New York, 1970.
66. Hanley, H. J. M., Gibbs, K. E., and Murad, S. J., Phys. Chem. Ref. Data, 6, 1167 (1972).
67. Bonscher, F. S., Shipman, L. M., and Yen, L. C., Hyd. Proc. 53 (2) 107 (1974); 53 (4), 169 (1974).
68. "Key Chemicals Data Book – Benzene," p. 23, Thermodynamics Research Center, Texas A&M University (1978).
69. "Perry's Chemical Engineers' Handbook," 6th Ed., p. 247, McGraw Hill Inc., New York, 1984.
70. API Technical Data Book, Figure 12 B 1.1 (Oct. 1964).
71. Lenoir, J. M., and Comings, E. W., Chem. Eng. Prog. 47, 223 (1951).
72. Hilrath, J. et al., NBS Circular No. 564 (1955).
73. Schaefer, C. A., and Thodos, G., Ind. Eng. Chem., 50, 1585 (1958).
74. Haran, E. N., Maitland, G. C., Mustafa, M., and Wakeham, W. A., "The Thermal Conductivity of Argon, Nitrogen and Carbon Monoxide in the Temperature Range 300-430 K at Pressures up to 10 MPa," Ber. Bunsenges. Phys. Chem. 87, 657-663 (1983).
75. LeNeindre, B., Tufeu, R., Bury, P., and Sengers, J. V., "Thermal Conductivity of Carbon Dioxide and Steam in the Supercritical Region," Ber. Bunsen-Gesellschaft 77 No. 4, 262-275 (1973).
76. Sugden, S., "The Variation of Surface Tension. VI. The Variation of Surface Tension with Temperature and Some Related Functions," J. Chem. Soc. 125, 32 (1924).
77. Stachorsky, K. M., "Surface Tensions of Liquid Mixtures," Z. Elektrochem, 34, 111 (1928).
78. Weinaug, C., and Katz, D. L., "Surface Tension of Methane-Propane Mixtures," Ind. Eng. Chem. 35, 239 (1943).
79. Baker, O., Swerdloff, W., "Calculations of Surface Tension – 3: Calculations of Surface Tension Parachor Values," Oil Gas J., 43, 141 (Dec. 5, 1955).
80. API Technical Data Book, Ch. 10, Surface Tension.
81. Deam, J. R. and Maddox, R. N., "Interfacial Tension in Hydrocarbon Systems," Proc. 48th Ann. Conv. GPA, Dallas, Texas, pp. 41-44, March, 1969.
82. Deam, J. R. and Maddox, R. N., "Interfacial Tension in Hydrocarbon Systems," Proc. 47th Ann. Conv. GPA, New Orleans, LA, pp. 30-38, March, 1968.
83. Bagzis, L. D. and Maddox, R. N., "Calculating Surface Tension of Hydrocarbon Mixtures," Proc. 49th Ann. Conv. GPA, Denver, CO, pp. 41-45, March, 1970.
84. Hadden, S. T., Hyd. Proc., October, 161 (1966).
85. Katz, D. L., Monroe, R. R., and Trainer, R. P., Pet. Tech., Sept. 1943.
86. Quale, O. R., Chem. Rev., 53, 439 (1953).
87. Ritter, R. B., Lenoir, J. M., and Schweppe, J. L., Pet. Ref. 37 No. 11, 225 (1958).
88. Carr, N. L., Kobayashi, R, and Burrows, D. B., Trans. AIME 201, 264 (1954).
89. Adler, S. B., Hall, K. R., "Use Correlation for Oil Properties," Hydrocarbon Processing, November 1985, pp. 71-75.
90. Private Communication May, 1997, R.N. Maddox and M. Moshfeghian.
91. Soave, G., Chem. Eng. Sci., Vol. 27, No. 6 (1972), p. 1197.
92. Hankinson, R.W. and G.H. Thomson, AIChE J. 25: 671, 1979.

NOTES:

SECTION 24

Thermodynamic Properties

This section contains thermodynamic charts, correlations, and calculation procedures.

The enthalpy correlation presents a rigorous method for calculation of enthalpy, followed by an example calculation illustrating the use of the associated charts. Also included is a quicker, approximate method for enthalpy determinations by the use of total enthalpy charts.

An entropy correlation and an example calculation showing its use are also presented.

FIG. 24-1

Nomenclature

H = enthalpy at desired conditions, Btu/lb mole, or Btu/lb
H^0 = ideal gas state enthalpy
H_0^0 = enthalpy datum at zero pressure and zero temperature
H_T^0 = ideal gas state enthalpy at temperature T
H_T^P = enthalpy at desired pressure and temperature
MW = molecular weight
P = absolute pressure, psia
P_c = critical or pseudocritical pressure, psia
P_r = reduced pressure = P/P_c
P_k = convergence pressure for multi-component systems, psia
T = absolute temperature, °R
T_c = critical or pseudocritical temperature, °R
T_r = reduced temperature = T/T_c
R = gas constant, Fig.1-4
°R = degrees Rankine = °F + 459.7
S = entropy, Btu/(lb mole • °R), or Btu/(lb • °R)
S^0 = ideal gas state entropy
Sp gr = specific gravity, dimensionless
V = specific volume, cu ft/lb
h_f = enthalpy of liquid, Btu/lb (Steam Tables)
h_g = enthalpy of gas, Btu/lb
h_{fg} = enthalpy of vaporization ($h_g - h_f$)
s_f = entropy of liquid, Btu/(lb • °R)(Steam Tables)
s_g = entropy of gas, Btu/(lb • °R)
s_{fg} = entropy change on vaporization ($s_g - s_f$)
v_f = specific volume of liquid, cu ft/lb (Steam Tables)
v_g = specific volume of gas, cu ft/lb
v_{fg} = specific volume change on vaporization ($v_g - v_f$)
x_i = mole fraction of component i in liquid phase
y_i = mole fraction of component i in vapor phase

Greek

Σ_i = summation for all components
ω = acentric factor

Subscripts

m = mixture property
i = any one component in a multicomponent mixture

Acentric Factor: A factor frequently used in correlating thermodynamic properties — defined by $\omega = \log P_{vr} - 1.00$ where P_{vr} = reduced vapor pressure at $T_r = 0.7$.

Corresponding States: The theory that proposes pure components and mixtures have the same relative thermodynamic properties when at the same relative thermodynamic state.

Critical Pressure: The vapor pressure at the critical temperature.

Critical Temperature: The temperature above which a component cannot be liquefied. For mixtures, the temperature above which all of the mixture cannot be liquid.

Datum: A reference point.

Density: Mass per unit volume of a substance.

Enthalpy: Heat content, H, composed of internal energy, E, and flow energy, PV. Usually expressed as $H = E + PV$.

Entropy: A thermodynamic quantity, S, defined by the equation – $dS = dQ/T$ where Q is the amount of heat entering or leaving the system at absolute temperature, T.

Ideal Gas: A gas which follows the equation $PV = nRT$ where n = number of moles.

Irreversibility: The degree of heat or work that is lost when a system is taken from one pressure and temperature to another pressure and/or temperature and returned to its original condition.

Mole(s): A mass of substance corresponding to its molecular weight, expressed usually either as lb-moles or gm-moles.

Phase Envelope: The boundaries of an area on the P-T diagram for the material which encloses the region where both vapor and liquid coexist.

Quality: The weight fraction of vapor in a vapor-liquid mixture.

Reduced Pressure: The ratio of the absolute pressure to the critical pressure.

Reduced Temperature: The ratio of the absolute temperature to the critical temperature.

Saturated Water: Water at its boiling temperature for the pressure exerted on it.

Saturated Steam: Steam at the boiling temperature of water for the pressure exerted on it but containing no liquid water.

Specific Volume: The volume of a substance per unit mass. (Inverse of density.)

Thermodynamics: The science which deals with the energy of systems and its changes and effects.

ENTHALPY BEHAVIOR

The change of enthalpy with temperature and pressure is complex. Predicting the enthalpy for a pure component or mixture is multi-step procedure that requires information that can only be obtained by experimental measurement. For pure components, use of a P-H diagram like those shown in Figs. 24-22 to 24-35 is recommended.

The enthalpy behavior of mixtures can be predicted through thermodynamic correlations. Use of a good contemporary equation of state is recommended for mixture enthalpy predictions. Fig. 24-2 shows graphically the change in enthalpy of three gas streams and two liquid streams as pressure is changed at constant temperature. Values for the plot were calculated by the Soave[10] version of the Redlich-Kwong equation of state[11]. The curves in Fig. 24-2 are for no phase change and show typical behavior of gas phase enthalpy decreasing and liquid phase enthalpy increasing with increasing pressure.

Enthalpies for mixtures of real gases and liquids can be predicted by hand calculation methods. The ones recommended for use are based on an extension of the principle of corresponding states and are shown graphically in Fig. 24-6 and 24-7.

Ideal Gas State Enthalpies

Enthalpies for pure component gases are readily correlated as a power series of temperature for a wide range of components including all of those that occur in natural gas streams. Typical values for natural gas components are plotted in Figs. 24-3 and 24-4 for temperatures from -200 to 900°F. Enthalpies for gas mixtures can be obtained as the mole fraction average if molar enthalpies are used, or the weight fraction average if mass enthalpies are used.

Many natural gas streams contain undefined, or pseudo, components. Ideal gas enthalpies for pseudo components are shown in Fig. 24-5. To use Fig. 24-5 the specific gravity, molecular weight and temperature (relative density, molecular mass and temperature) must be known. Fig. 24-5 is for paraffinic mixtures and should not be used for pseudo components derived form aromatic crude oils.

The enthalpy datum chosen is zero enthalpy at zero absolute pressure and zero absolute temperature, the same datum as used in API Project 44.[1] The choice of datum is arbitrary and a matter of convenience. Enthalpy differences, the values of interest, are not affected by the datum chosen. However, the same enthalpy datum should be used for all components in any one calculation.

CHANGE OF ENTHALPY WITH PRESSURE

For purposes of correlation and calculation, the ideal and real gas behaviors are treated separately. The mixture ideal gas enthalpy at a specified temperature is calculated; the enthalpy change of the real gas mixture is calculated from a correlation prepared from experimental enthalpy measurements on a variety of mixtures. This relation can be expressed as:

$$H_T^P - H_0^0 = (H_T^0 - H_0^0) - (H_T^0 - H_T^P) \qquad \textbf{Eq 24-1}$$

where:

$(H_T^0 - H_0^0)$	the ideal gas state enthalpy above the datum, H^0, at the desired temperature (subscript T), Btu/lb mole
$(H_T^0 - H_T^P)$	the change of enthalpy with pressure, given by the enthalphy difference between the ideal gas state enthalpy and the enthalpy at the desired pressure, both quantities at the specified temperature, Btu/lb mole.

Since H_0^0 is zero at the chosen datum, zero absolute temperature, Equation 24-1 can be written:

$$H_T^P = H_T^0 - (H_T^0 - H_T^P) \qquad \textbf{Eq 24-2}$$

Which can be simplified to:

$$H = H^0 - (H^0 - H) \qquad \textbf{Eq 24-3}$$

Values for the change of enthalpy with pressure for a real gas or liquid are obtained from a correlation based on the principle of corresponding states.[2] The original correlation was extended to low reduced temperatures[3] to cover low temperature gas processing applications. The correlation shown in Figs. 24-6 and 24-7 consists of two parts. One part gives the change of enthalpy with pressure for a simple fluid (fluid with zero acentric factor). The second part is a correction for deviation of a real fluid from the ideal fluid change of enthalpy with pressure. The value of $(H^0 - H)$ in Eq. 24-3 is calculated by:

$$(H^0 - H) = RT_c\left\{\left[\frac{(H^0 - H)}{RT_c}\right]^{(0)} + \omega\left[\frac{(H^0 - H)}{RT_c}\right]^{(\prime)}\right\} \qquad \textbf{Eq 24-4}$$

where:

$[(H^0 - H)/RT_c]^{(0)}$	the change of enthalpy of a simple fluid with pressure from Fig. 24-6.
$[(H^0 - H)/RT_c]^{(\prime)}$	deviation from the change for a simple fluid from Fig. 24-7

Figs. 24-6 and 24-7 can be used for gas and liquid mixtures. If the mixture is a gas, use the lower chart in each figure. For liquids read the value from the isotherms at the top of the chart. The units of $(H^0 - H)$ will depend on the units of the universal gas constant, R, and Tc. For $(H^0 - H)$ in Btu/lb mole, R=1.986 Btu/(lb mole • °R) and T_c is in °R.

The reduced temperature and pressure are defined as $T_r = T/T_c$ and $P_r = P/P_c$, where absolute temperature and pressure must be used. Values for pure component critical temperature, pressure and acentric factor are in Section 23 Physical Properties. Section 23 also contains graphs relating ASTM distillation temperature, molecular weight, specific gravity (relative density), critical temperature, and critical pressure for undefined fractions. The fraction acentric factor can be estimated from Eq 23-17.

To use Figs. 24-6 and 24-7, the mixture composition must be known. The mole fraction average (pseudo) critical temperature and pressure are calculated using Kay's Rule[4] as illustrated in Fig. 23-3 ($T_{Cm} = \Sigma y_i T_{Ci}$ and $P_{Cm} = \Sigma y_i P_{Ci}$). The mole fraction average mixture enthalpy is calculated from:

$$H_m^0 = \Sigma y_i H_i^0 \qquad \textbf{Eq 24-5}$$

The values of H_i^0 are obtained by multiplying the enthalpy value from Figs. 24-3 and 24-4 by the molecular weight of the individual component.

The mole fraction average acentric factor is calculated:

$$\omega_m = \Sigma y_i\, \omega_i \qquad \textbf{Eq 24-6}$$

The information necessary to evaluate enthalpies for the mixture from Figs. 24-3 to 24-7 is now known. Use of the method will be clearer after study of the following illustrative calculation.

EXAMPLE CALCULATION USING ENTHALPY CORRELATION

A gas with the composition shown in Fig. 24-8 is at 120°F and 1010 psia. Using Figs. 24-3 and 24-4 calculate the enthalpy of the gas. Following the example in Fig. 23-6, the mole fraction average critical temperature is calculated as 370.7°R, and the pseudo critical pressure as 669.1 psia. Following the same procedure, the mixture acentric factor is 0.02476 and the molar enthalpy 4885.7 Btu/lb mole. With a reduced temperature of 1.564 and a reduced pressure of 1.509, the reading from Fig. 24-6 is 0.70 and from Fig. 24-7 is 0.020, which give a mixture enthalpy at 120˚F and 1010 psia of 4370.0 Btu/lb mole.

The total enthalpy charts shown in Figs. 24-9 to 24-17 offer a rapid means of calculating enthalpy changes on essentially the same basis as previously described. They may be used instead of carrying out the detailed component-wise calculations for mixture enthalpies. The charts cover the range of compositions, pressures and temperatures encountered in most natural gas systems.

The total enthalpy charts were developed from results calculated for synthesized binary mixtures of the pure component normal paraffin hydrocarbons next lighter and heavier than the mixture mole weights indicated. The calculations were carried out by a computer program which interpolated between adjacent values in the tabulated values of enthalpy departure reported by Curl and Pitzer.[2]

Ideal gas enthalpy values for each pure normal paraffin component were calculated and used to calculate the ideal gas mixture enthalpy. The ideal gas state enthalpy equation used for methane, ethane and propane was a curve fit of the data shown in Fig. 24-3. For butane and heavier components, a fourth order polynomial was used with coefficients taken from the API Data Book, Table A1.2.[9] The fifth coefficient reported in the API table was dropped to convert to the 0°R, 0 psia enthalpy datum.

Ideal gas enthalpies were corrected for pressure changes by interpolating the tabular data used to compile Figs. 24-6 and 24-7. Pressure calculations were made from reduced pressures of 0.2 to 3,000 psia. Temperatures ranged from -300°F or T_r = 0.35 minimum to 600°F maximum.

Caution. *Some mixtures encountered in the calculations fell inside the phase envelopes of Figs. 24-6 and 24-7, Rather than extrapolate into the phase envelopes of Figs. 24-6 and 24-7. for enthalpy pressure corrections, the total enthalpies were first generated, plotted, and then extrapolated.*

Vapor enthalpies at 150 psia were extended to lower temperatures by assuming the relative enthalpy change with temperature to be the same as for an ideal gas.

ENTROPY CORRELATION

Entropy is most used as a guide for interpreting the behavior of gases and liquids in compression and expansion processes. The entropy of a multicomponent mixture may be calculated by combing ideal gas state entropies from API 44[1] with the Curl and Pitzer[2] tables of values for the change of entropy with pressure. Entropy equations for undefined mixtures (pseudo components) are not available but, for most uses where the pseudo components are present in small concentration, they can satisfactorily be approximated by the nearest molecular weight paraffin hydrocarbon.

EXAMPLE CALCULATION USING ENTROPY CORRELATION

The same gas as in the enthalpy example (shown in Fig. 24-18) is at 120°F and 1010 psia. The pseudo criticals, acentric factor, reduced temperature, and reduced pressure have the same values as in the enthalpy example. The mixture ideal gas state entropy is 52.2 Btu/(lb mole •°R). The value read from Fig. 24-20 is 0.345 and that from Fig. 24-21 is 0.065. These combine to give (remember P in lnP must be in atmospheres) a real gas entropy of 44.05 Btu/(lb mole •°R).

REFERENCES

1. API Research Project 44, "Data on Hydrocarbons and Related Compounds," A & M Press, College Station, Texas.
2. Curl, R. F., Jr. and Pitzer, K. S., Ind. Eng. Chem., 50, 1958, p. 265.
3. Chao, K. C. and Greenkorn, R. A., GPA Research Report RR-3, Gas Processors Association, Tulsa, Oklahoma, April 1971.
4. Kay, W. B., Ind. Eng. Chem., 28, 1936, p. 1014.
5. Jacoby, R. H. and Yarborough, L., Technical Report to GPA, 1966.
6. ASME Steam Tables, 3rd Ed., Amer. Soc. of Mech. Eng., New York, N.Y., 1967.
7. Keenan, J. H., Keyes, F. G., Hill, P. G. and Moore, J. G., "Steam Tables," John Wiley & Sons, Inc., New York, N.Y., 1969.
8. Ely, J. F., Private Communication, 1985.
9. "Technical Data Book — Petroleum Refining," 3rd Ed., American Petroleum Institute, Washington, D.C., 1977.
10. Soave, G., "Equilibrium Constants from a Modified Redlich-Kwong Equation of State," Chem. Eng. Sci., Vol. 27, No. 6, pp. 1197-1203, 1972.
11. Maddox, R.N. and Moshfeghian, M., Private Communication, 1996.

BIBLIOGRAPHY

1. "Technical Data Book—Petroleum Refining," 3rd Ed., American Petroleum Institute, Washington, D.C., 1977.
2. Reid, R. D., Prausnitz, J. M. and Sherwood, T. K., "The Properties of Gases and Liquids," 3rd Ed., McGraw-Hill Book Co., New York, N.Y., 1977.
3. Kesler, M. G. and Lee, B. I., "Improve Prediction of Enthalpy of Fractions," Hydrocarbon Processing, 55, 1976, pp. 153-158.
4. Wormald, C. J., "Thermo Data for Steam/Hydrocarbons," Hydrocarbon Processing, May 1982, pp. 137-141.
5. Lee, M. C., Ratcliffe, A. E., Maddox, R. D., Parham, W. F. and Maddox, R. N., "Heat Capacity Determined for Crude Fractions," Hydrocarbon Processing, June 1978, pp. 187-189.
6. Yu, W. C., Lee, H. M. and Ligon, R. M., "Predicted High Pressure Properties," Hydrocarbon Processing, Jan. 1982, pp. 171-178.
7. "Properties for Light Petroleum Systems," Gulf Publishing Co., Houston, Texas, 1973.
8. Canjar, L. N. and Manning, F. S., "Thermodynamic Properties and Reduced Correlations of Gases," Gulf Publishing Co., Houston, Texas, 1967.
9. Weber, J. H., "Predict Latent Heats of Vaporization," Chemical Engineering, Jan. 14, 1980.
10. Starling, K. E., "Fluid Thermodynamic Properties for Light Petroleum Systems," Gulf Publishing Co., Houston, Texas 1973.
11. Maddox, R. N. and L. Lilly, "Gas Conditioning and Processing," Vol. 3, Campbell Petroleum Series Inc., Norman, Oklahoma, 1990.
12. Van Ness, H. C. and Abbott, M. M., "Classical Thermodynamics of Non-Electrolyte Solutions," McGraw-Hill, N.Y., 1982.

FIG. 24-2

Influence of Pressure on Enthalpy for Typical Natural Gas Streams

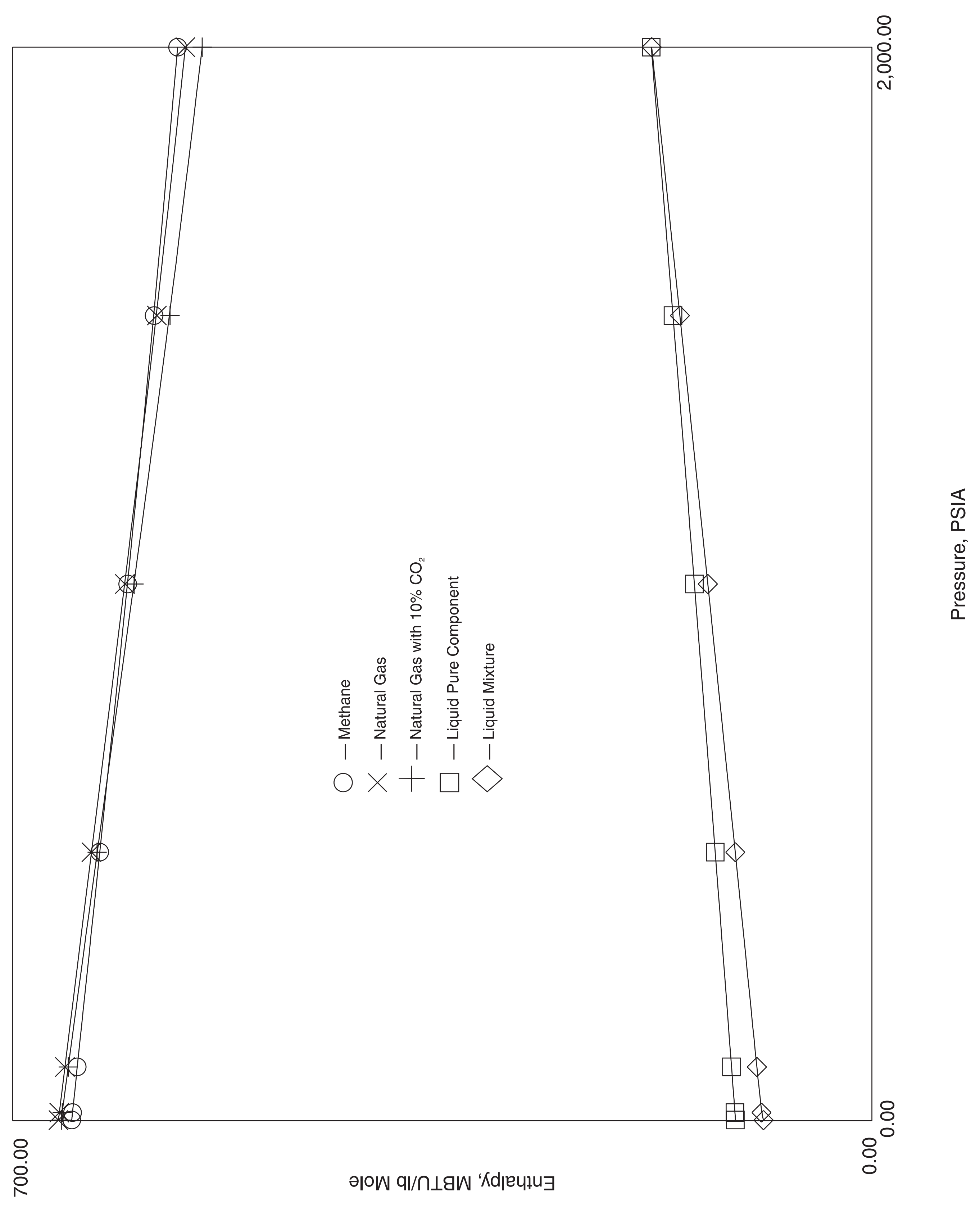

FIG. 24-3

Ideal-Gas-State Enthalpy of Pure Components

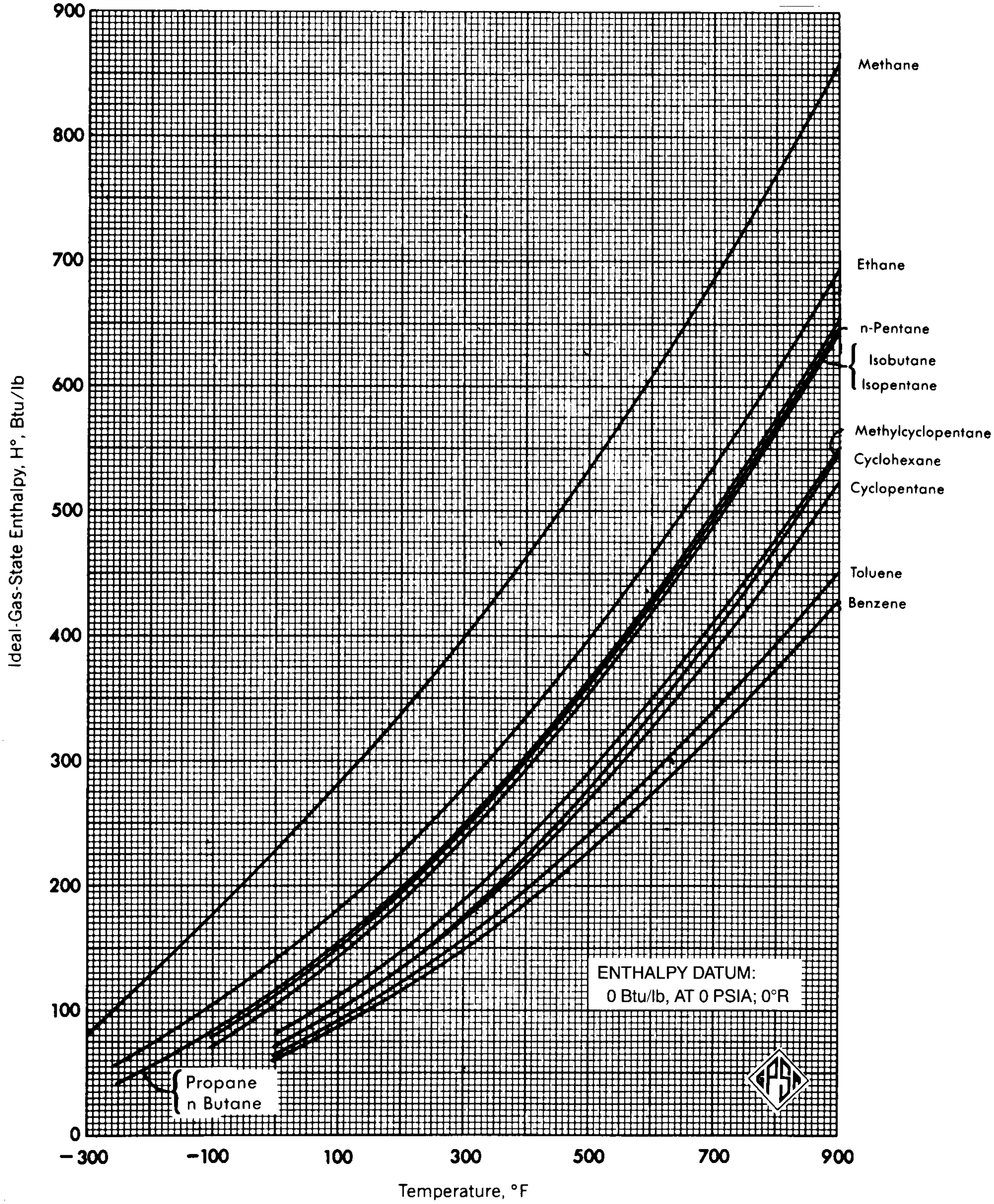

FIG. 24-4

Ideal-Gas-State Enthalpy of Pure Components

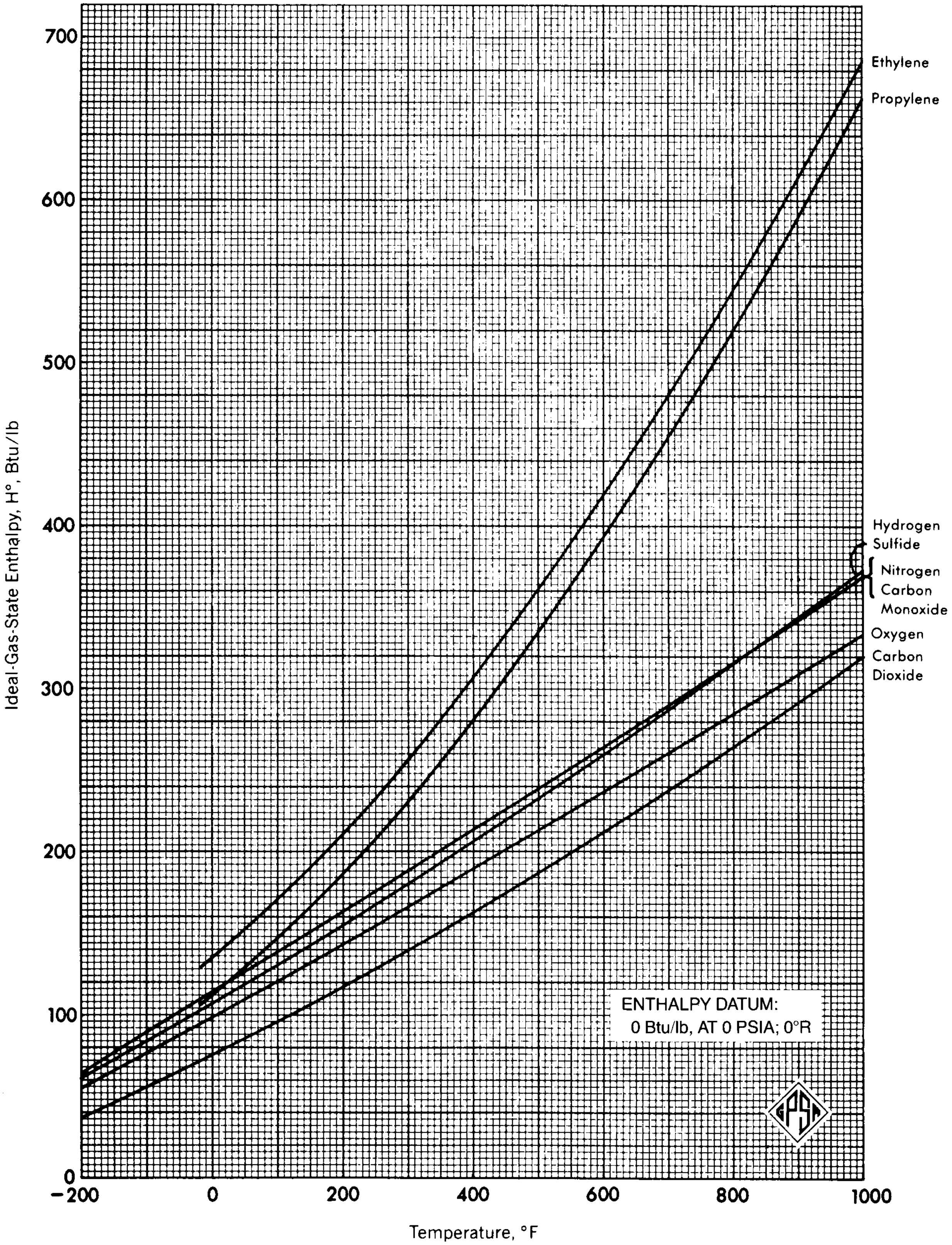

FIG. 24-5

Ideal-Gas-State Enthalpy of Petroleum Fractions

$$\ln\left[\ln\left(H_t^0 - H_0^0\right)\right] = 2.61456 - \frac{\ln T}{\sqrt{T}}\left[2.49639 + 1.56283(\text{Sp. gr.}) + \frac{25.1591}{MW}\right]$$

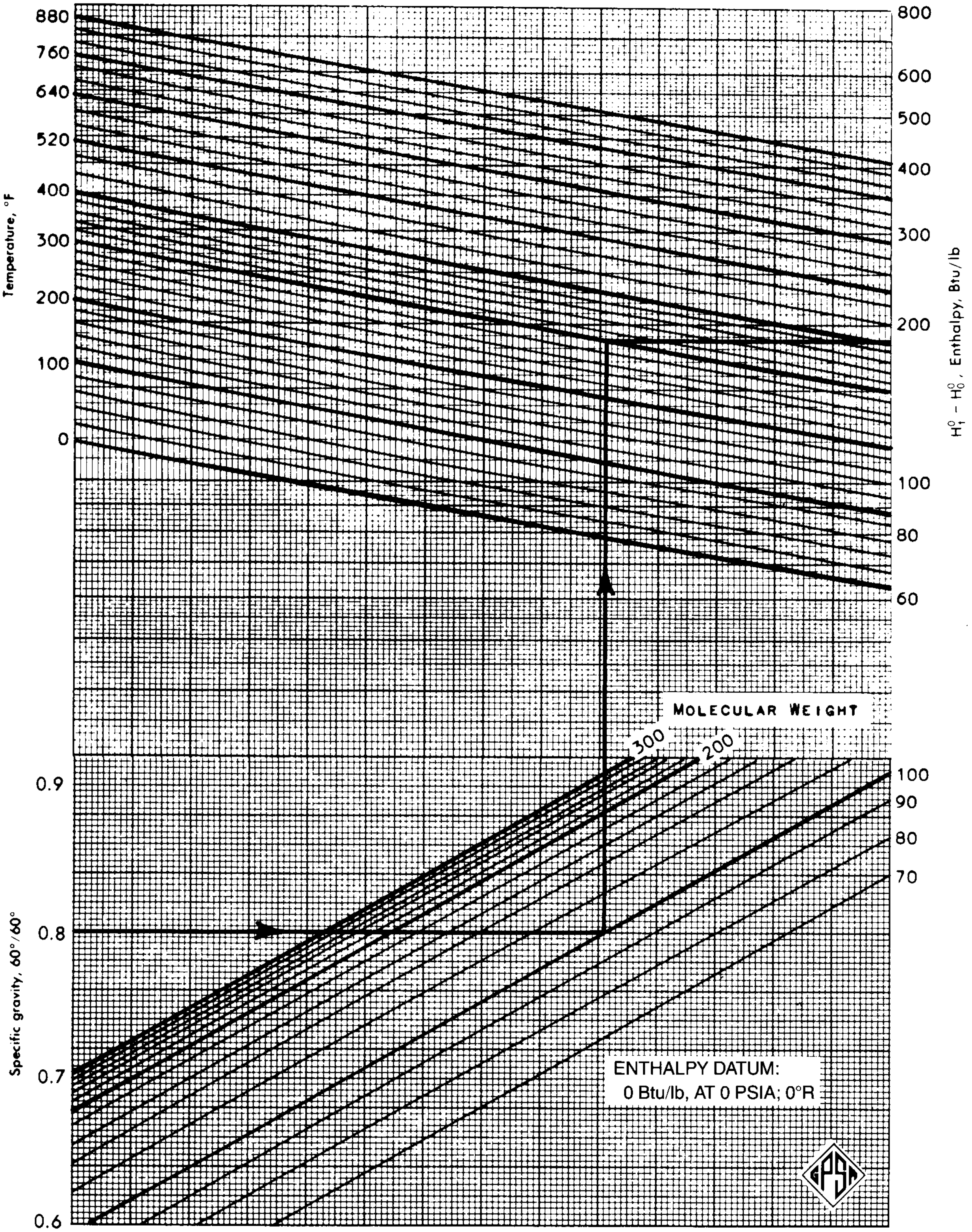

ENTHALPY DATUM:
0 Btu/lb, AT 0 PSIA; 0°R

FIG. 24-6

Effect of Pressure on Enthalpy (Simple Fluid)

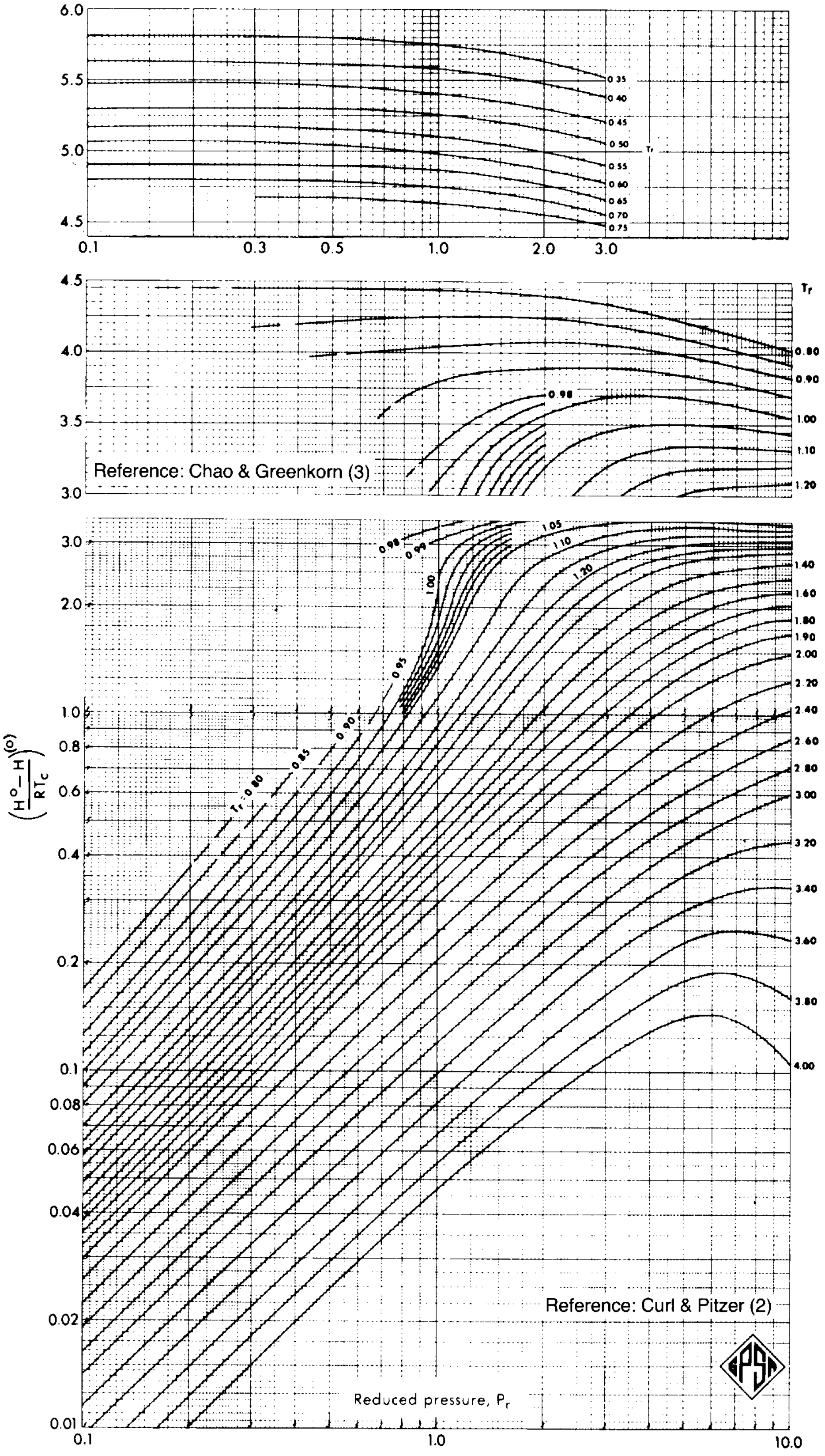

Reference: Chao & Greenkorn (3)

Reference: Curl & Pitzer (2)

FIG. 24-7

Effect of Pressure on Enthalpy
(Correction for Real Fluids)

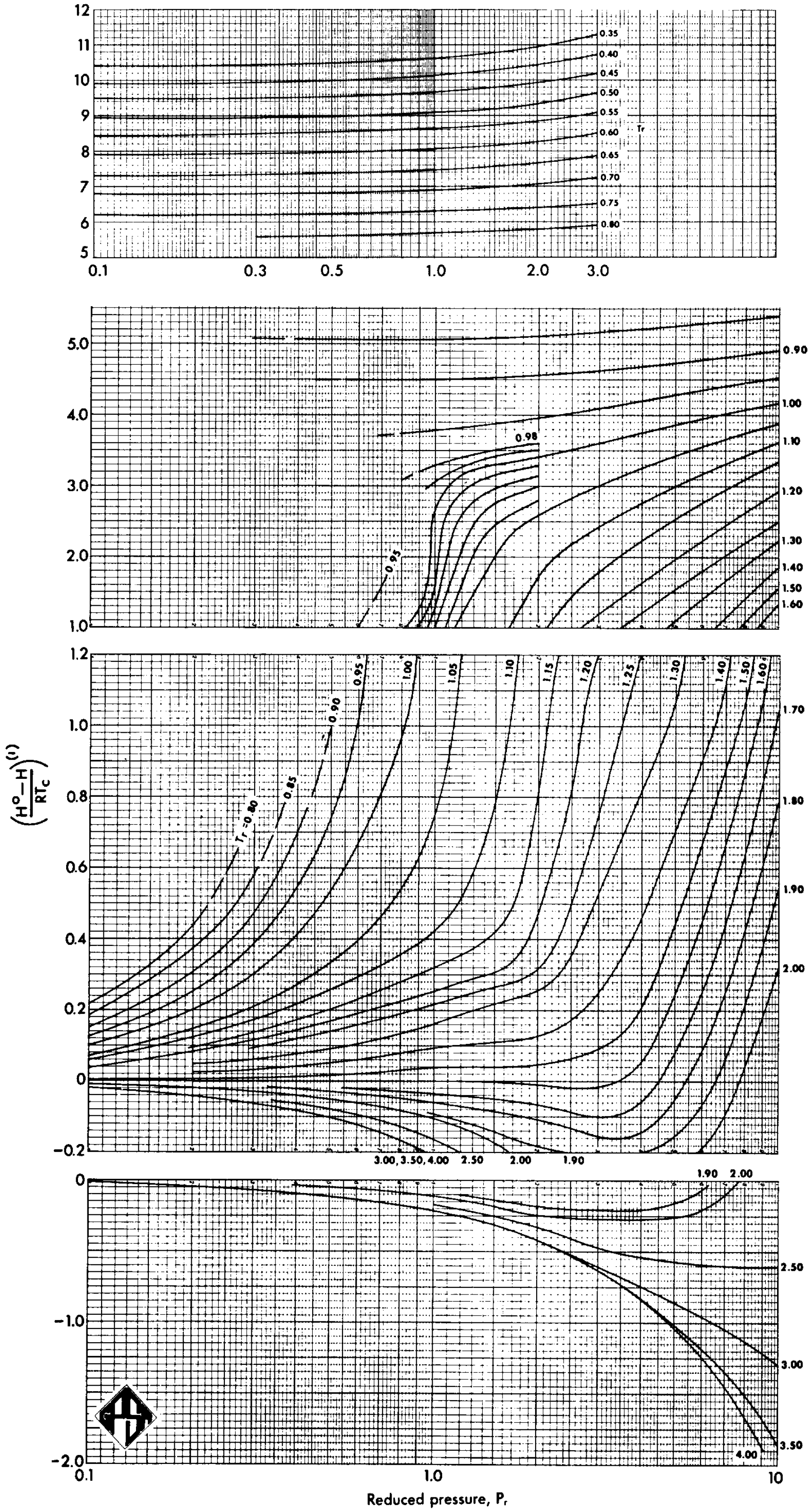

FIG. 24-8
Example Enthalpy Calculation

Component	Mole Fraction	Molecular Weight	Critical Temp. °R.	Critical Pressure psia	Acentric Factor	Ideal Gas Enthalpy Btu/lb
Methane	0.9010	16.04	343.0	667.0	0.0108	292
Carbon Dioxide	0.0106	44.01	547.4	1069.5	0.2667	100
Ethane	0.0499	30.07	549.7	707.8	0.0972	189
Propane	0.0187	44.1	665.6	615.0	0.1515	162
i-Butane	0.0065	58.12	734.1	527.9	0.1852	151
n-Butane	0.0045	58.12	765.2	548.8	0.1981	162
i-Pentane	0.0017	72.15	828.6	490.4	0.2286	151
n-Pentane	0.0019	72.15	845.4	488.1	0.2510	158
Hexane	0.0052	86.18	911.5	439.5	0.2990	139

IDEAL GAS STATE ENTHALPY	Btu/lb mol	4885.7
PSEUDO CRITICAL TEMPERATURE	°R	370.7
REDUCED TEMPERATURE		1.564
PSEUDO CRITICAL PRESSURE	psia	669.1
REDUCED PRESSURE		1.509
MOLE FRACTION AVERAGE ACENTRIC FACTOR		0.02476

$[(H^0-H)/RT_C]^{(0)}$ from Fig. 24-6	0.70
$[(H^0-H)/RT_C]^{(\prime)}$ from Fig. 24-7	0.020
$[(H^0-H)_m/RT_C] = [(H^0-H)/RT_C]^{(0)} +$ $[w_m[(H^0-H)/RT_C]^{(\prime)}$	0.7005
$(H^0-H)_m$, Btu/lb mole	515.7
H, Btu/lb mole	4370.0

NOTE: Ideal Gas Enthalpy for Hexane from Fig. 24-9.

Wichert and Aziz correction not applied to critical properties.

FIG. 24-9

Total Enthalpy of Paraffin Hydrocarbon Vapor

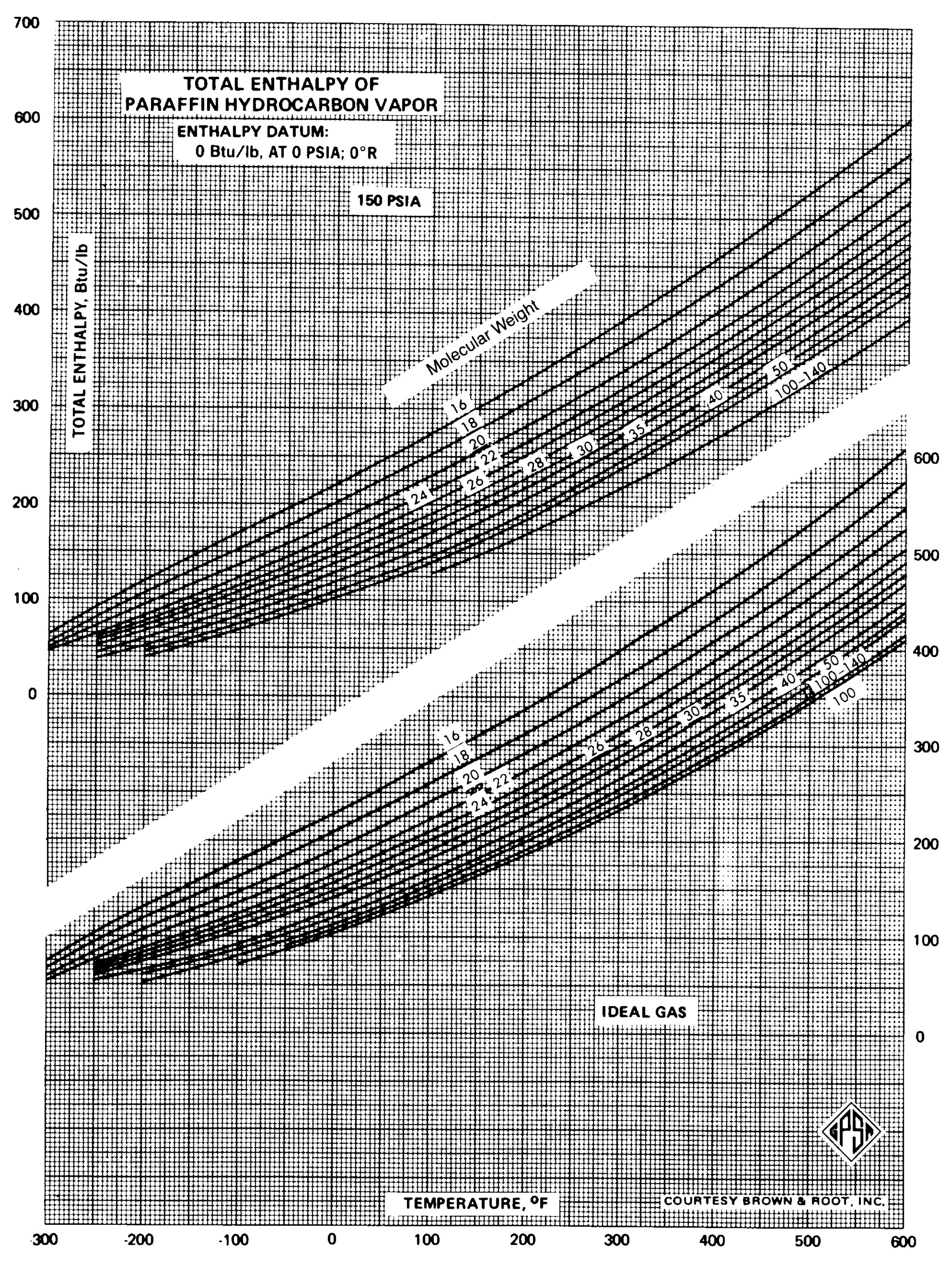

FIG. 24-10

Total Enthalpy of Paraffin Hydrocarbon Vapor

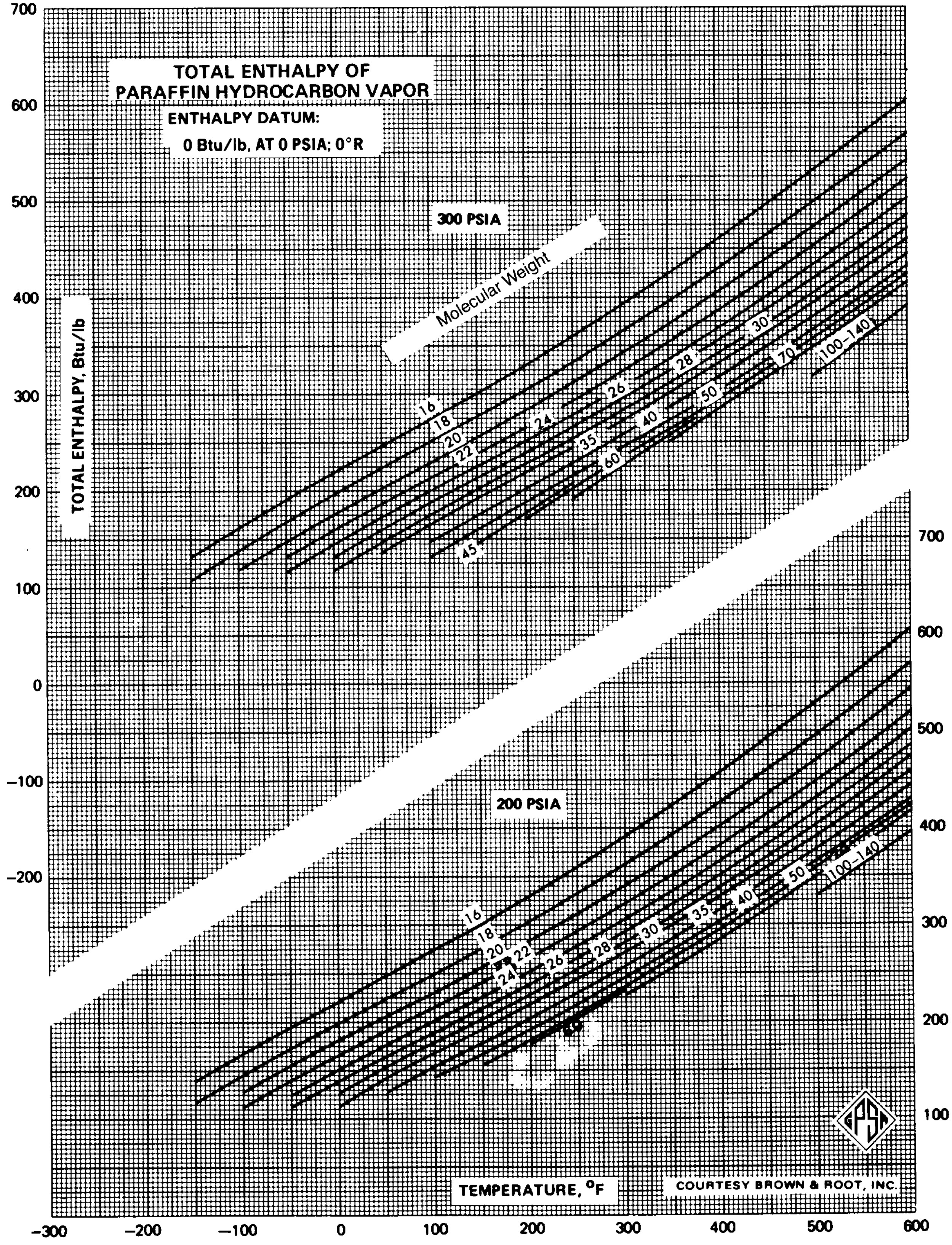

FIG. 24-11

Total Enthalpy of Paraffin Hydrocarbon Vapor

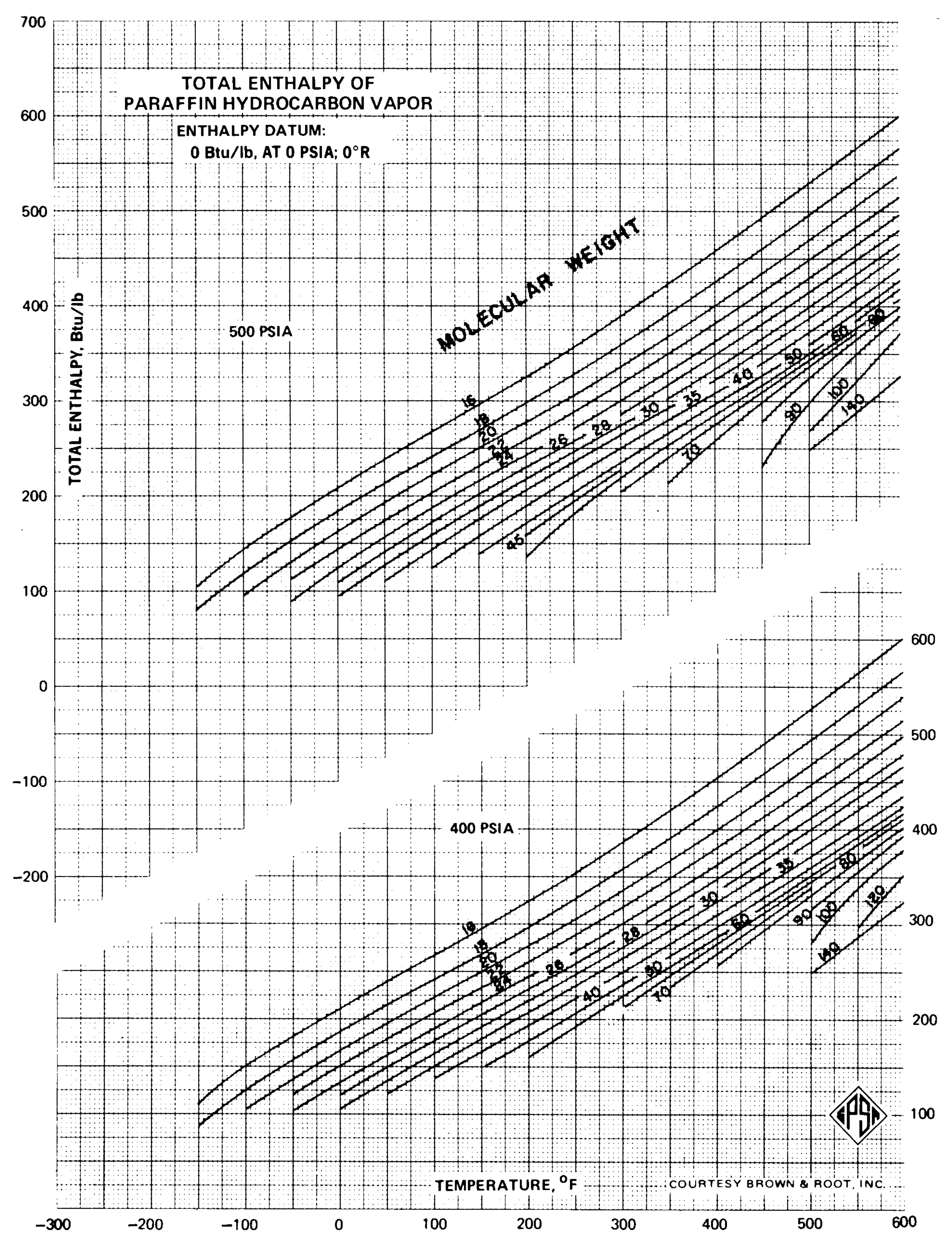

FIG. 24-12

Total Enthalpy of Paraffin Hydrocarbon Vapor

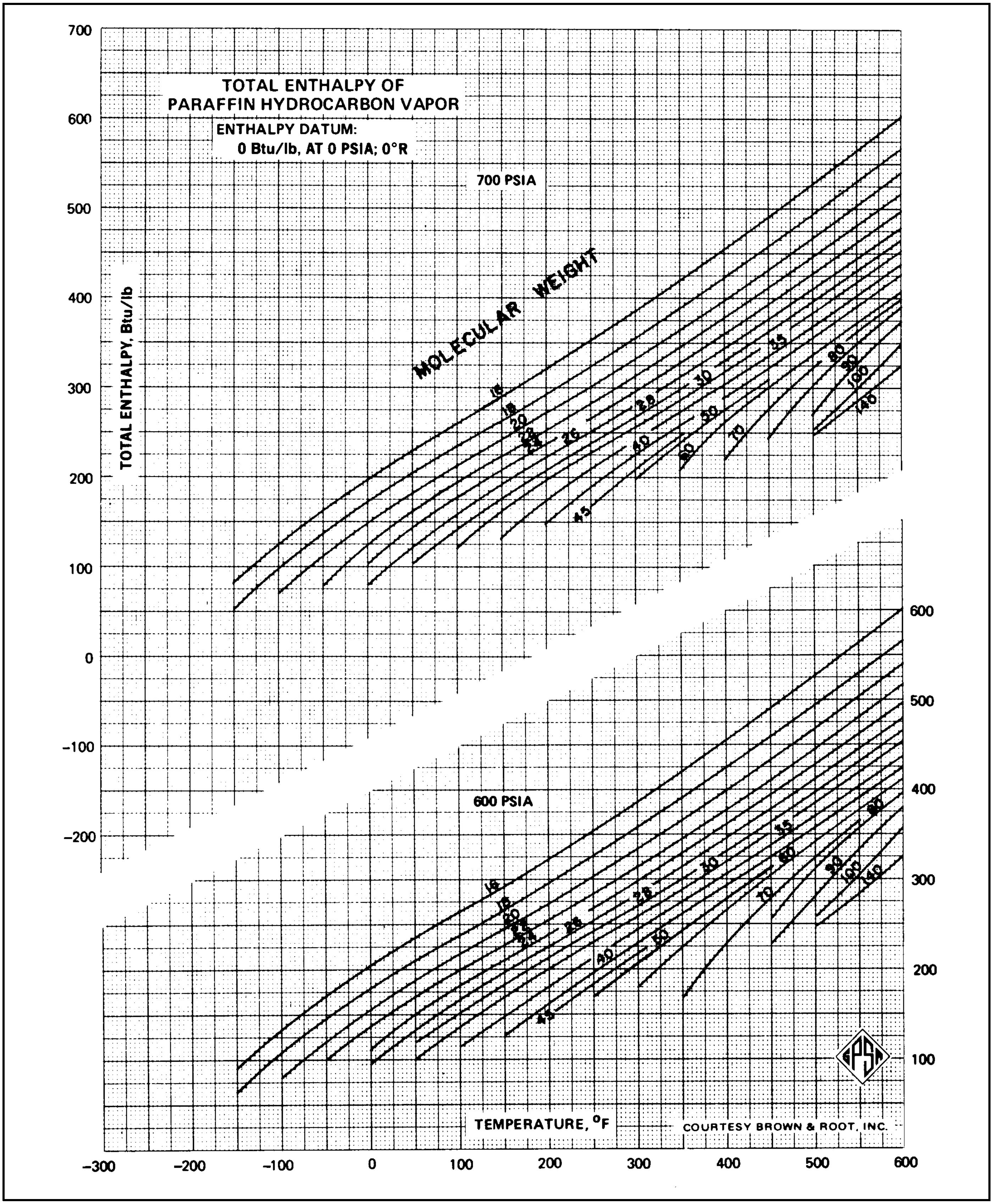

FIG. 24-13

Total Enthalpy of Paraffin Hydrocarbon Vapor

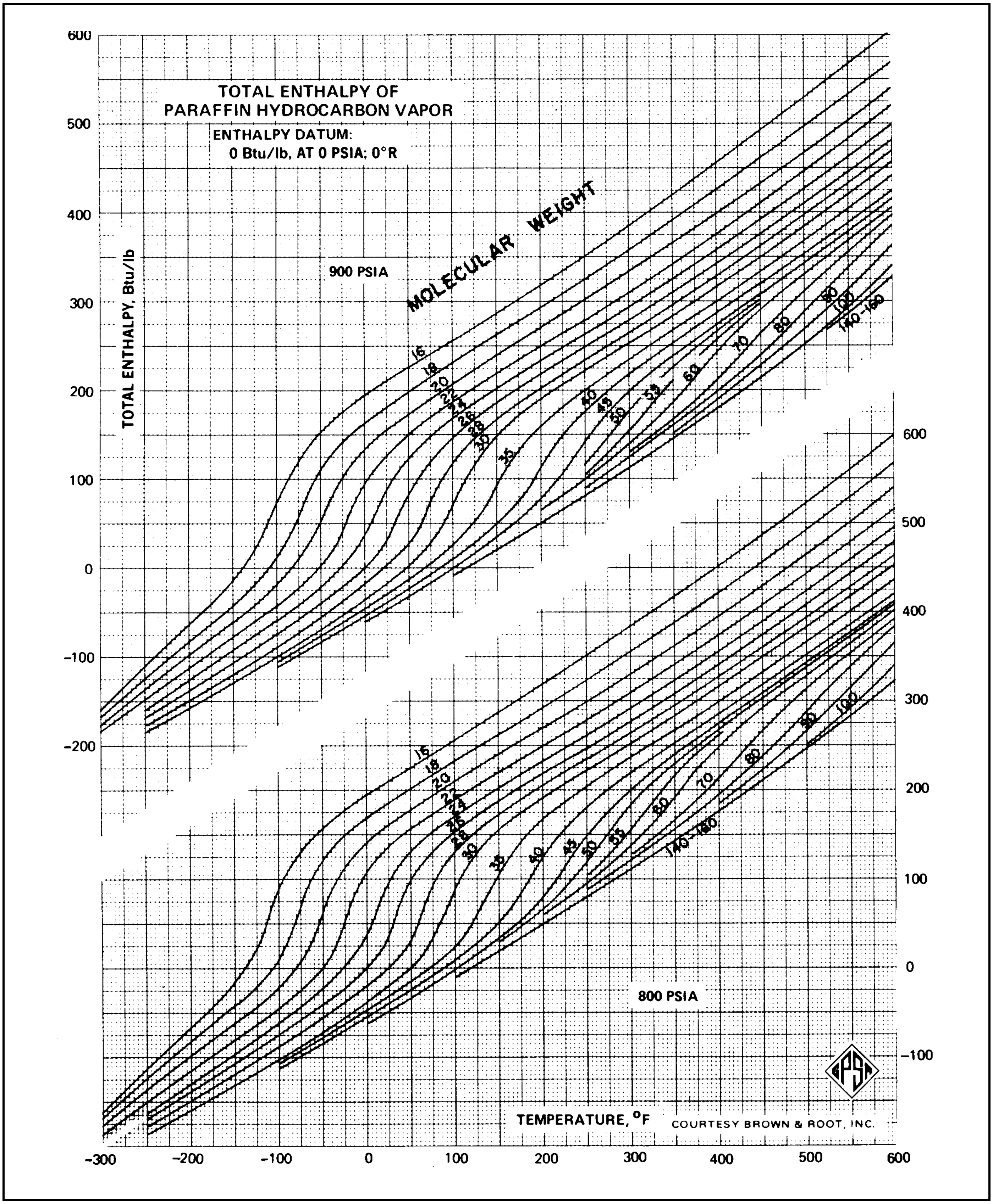

FIG. 24-14

Total Enthalpy of Paraffin Hydrocarbon Vapor

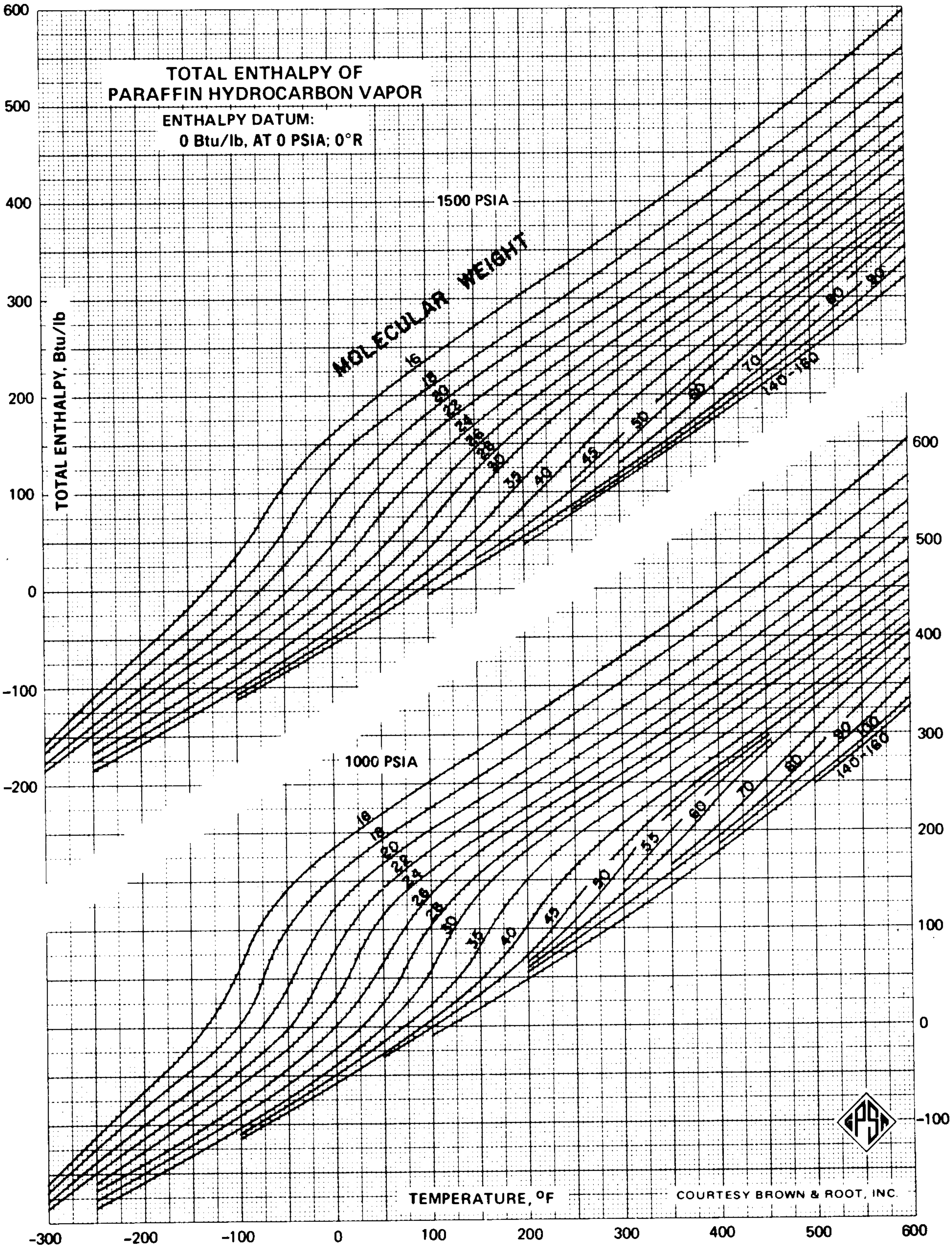

FIG. 24-15

Total Enthalpy of Paraffin Hydrocarbon Vapor

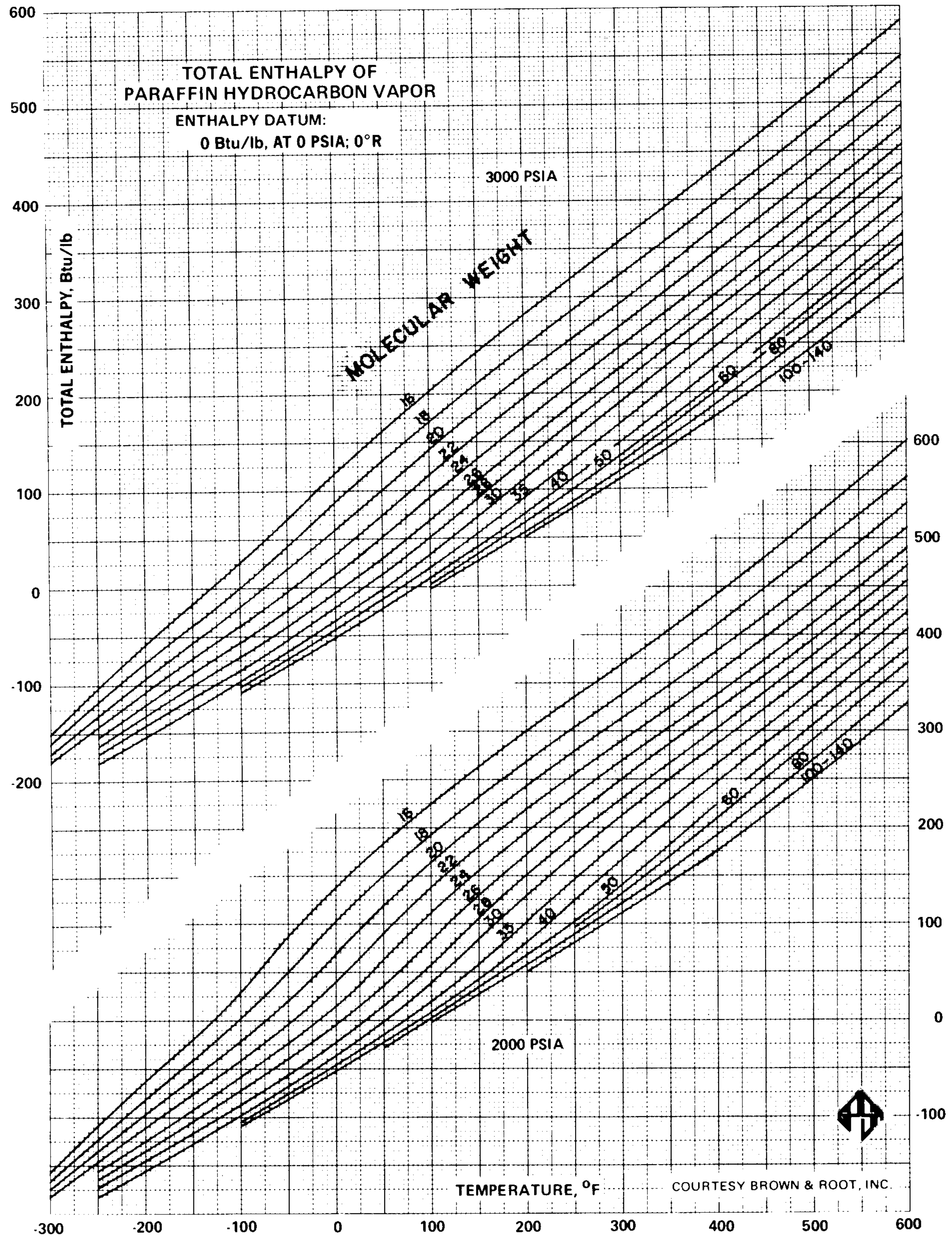

FIG. 24-16

Total Enthalpy of Paraffin Hydrocarbon Liquid

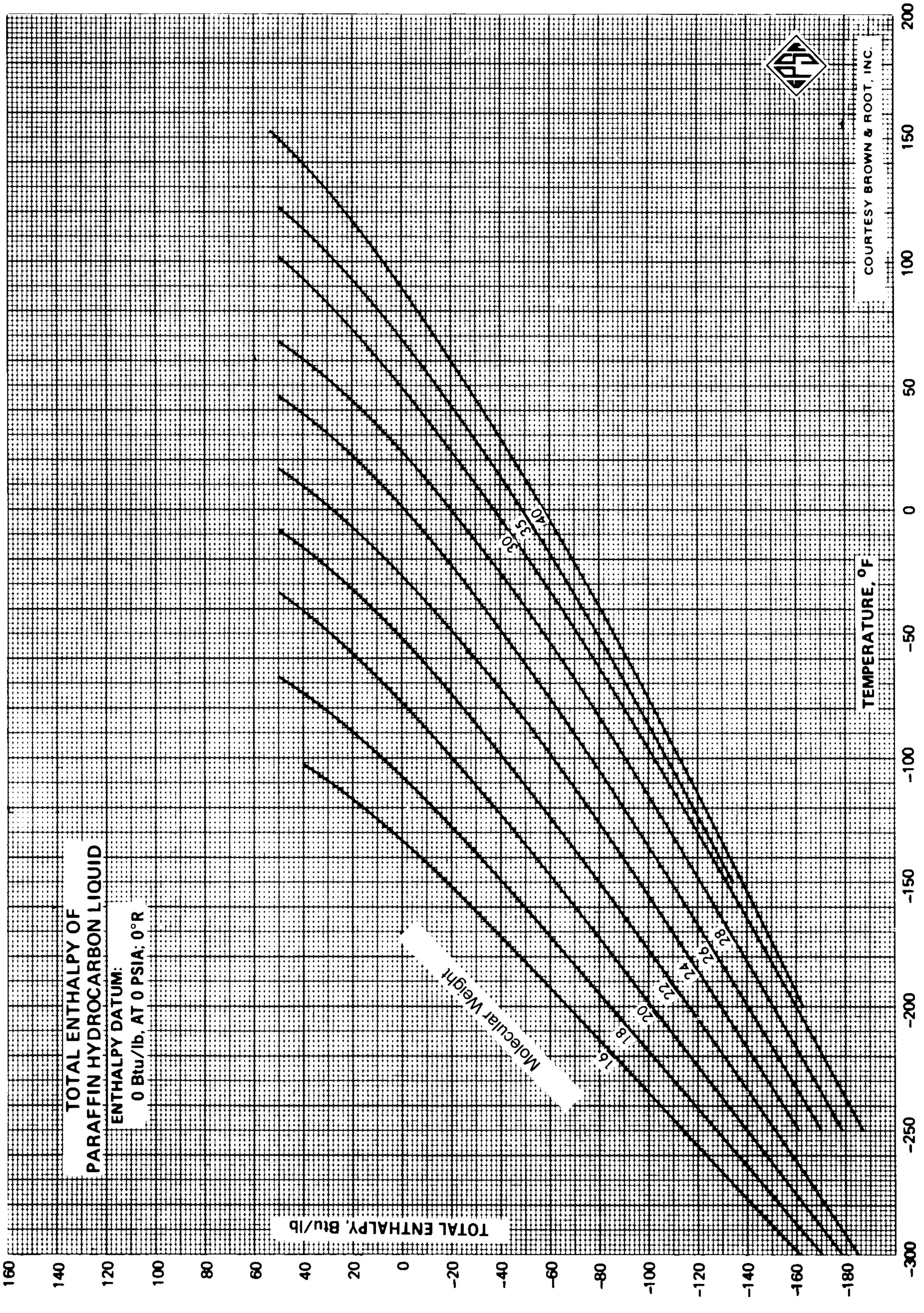

FIG. 24-17

Total Enthalpy of Paraffin Hydrcarbon Liquid

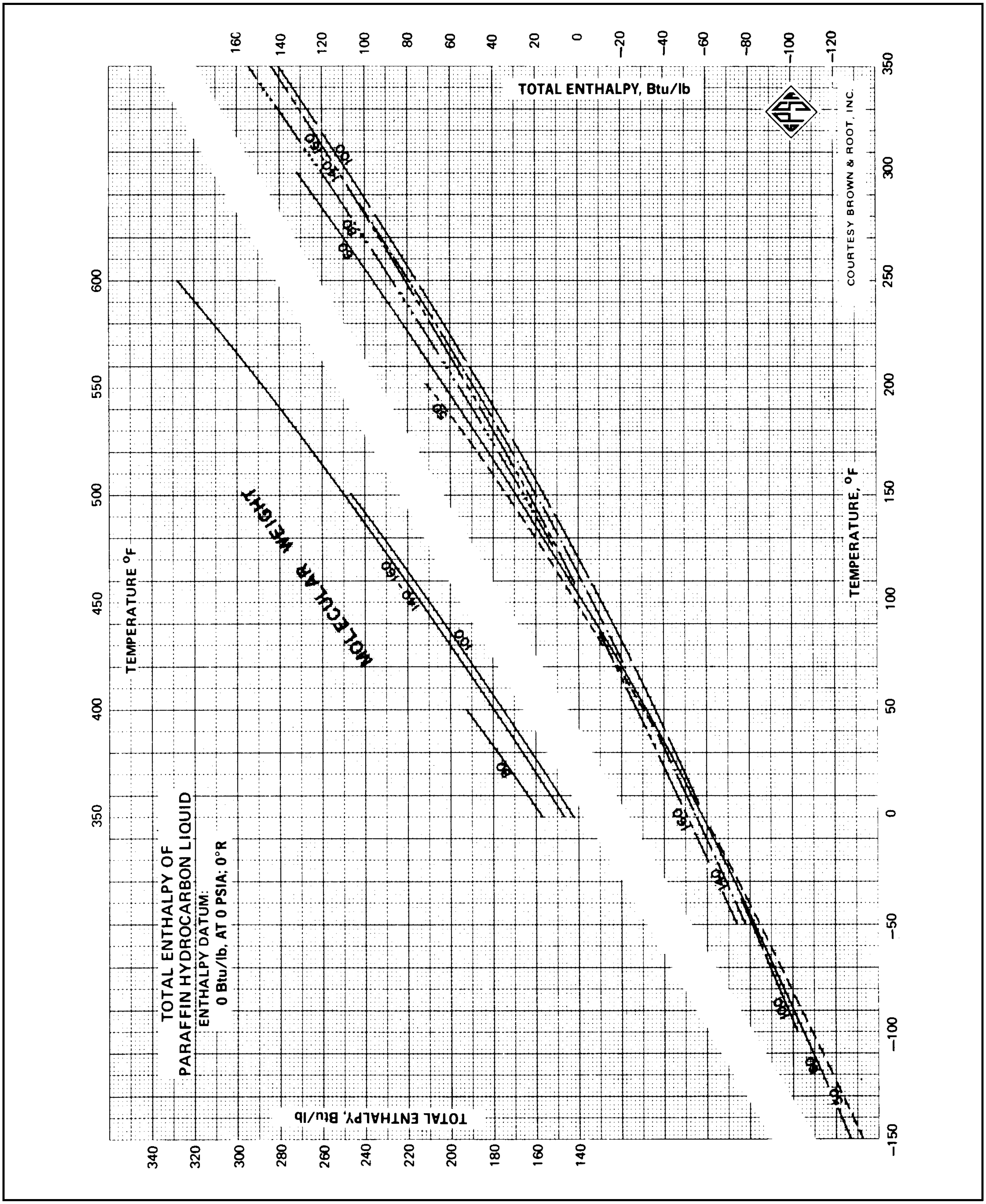

FIG. 24-18
Example Entropy Calculation

Component	Mole Fraction	Molecular Weight	Critical Temp. °R.	Critical Pressure psia	Acentric Factor	Ideal Gas Entropy Btu/(lb•°R)
Methane	0.9010	16.04	343.0	667.0	0.0108	3.150
Carbon Dioxide	0.0106	44.01	547.4	1069.5	0.2667	1.176
Ethane	0.0499	30.07	549.7	707.8	0.0972	2.036
Propane	0.0187	44.1	665.6	615.0	0.1515	1.624
i-Butane	0.0065	58.12	734.1	527.9	0.1852	1.400
n-Butane	0.0045	58.12	765.2	548.8	0.1981	1.338
i-Pentane	0.0017	72.15	828.6	490.4	0.2286	1.260
n-Pentane	0.0019	72.15	845.4	488.1	0.2510	1.245
Hexane	0.0052	86.18	911.5	439.5	0.2990	1.198

IDEAL GAS STATE ENTROPY	Btu/(lb mol • °R)	52.2
PSEUDO CRITICAL TEMPERATURE	°R	370.7
REDUCED TEMPERATURE		1.564
PSEUDO CRITICAL PRESSURE	psia	669.1
REDUCED PRESSURE		1.509
MOLE FRACTION AVERAGE ACENTRIC FACTOR		0.02476

$[(S^0 - S)/R]^{(o)}$ from Fig. 24-20	0.345
$[(S^0 - S)/R]^{(\prime)}$ from Fig. 24-21	0.065
ln P (P in atmospheres)	4.2301
$(S^0 - S) = R\left[\left(\frac{S^o - S}{R}\right)^{(o)} + w\left(\frac{S^o - S}{R}\right)^{(\prime)} + \ln P\right]$	9.089
$R\,\Sigma\, y_i \bullet \ln(y_i)$	-0.9404
$S_m^o = (\Sigma\, y_i S_i^o - R\,\Sigma\, y_i \bullet \ln(y_i))$	53.14
$S_m = [S_m^o - (S_m^o - S_m)]$	44.05

NOTE: Entropy for Hexane was estimated.

Wichert and Aziz correction not applied to critical properties.

FIG. 24-19

Ideal Gas State Entropy of Pure Components

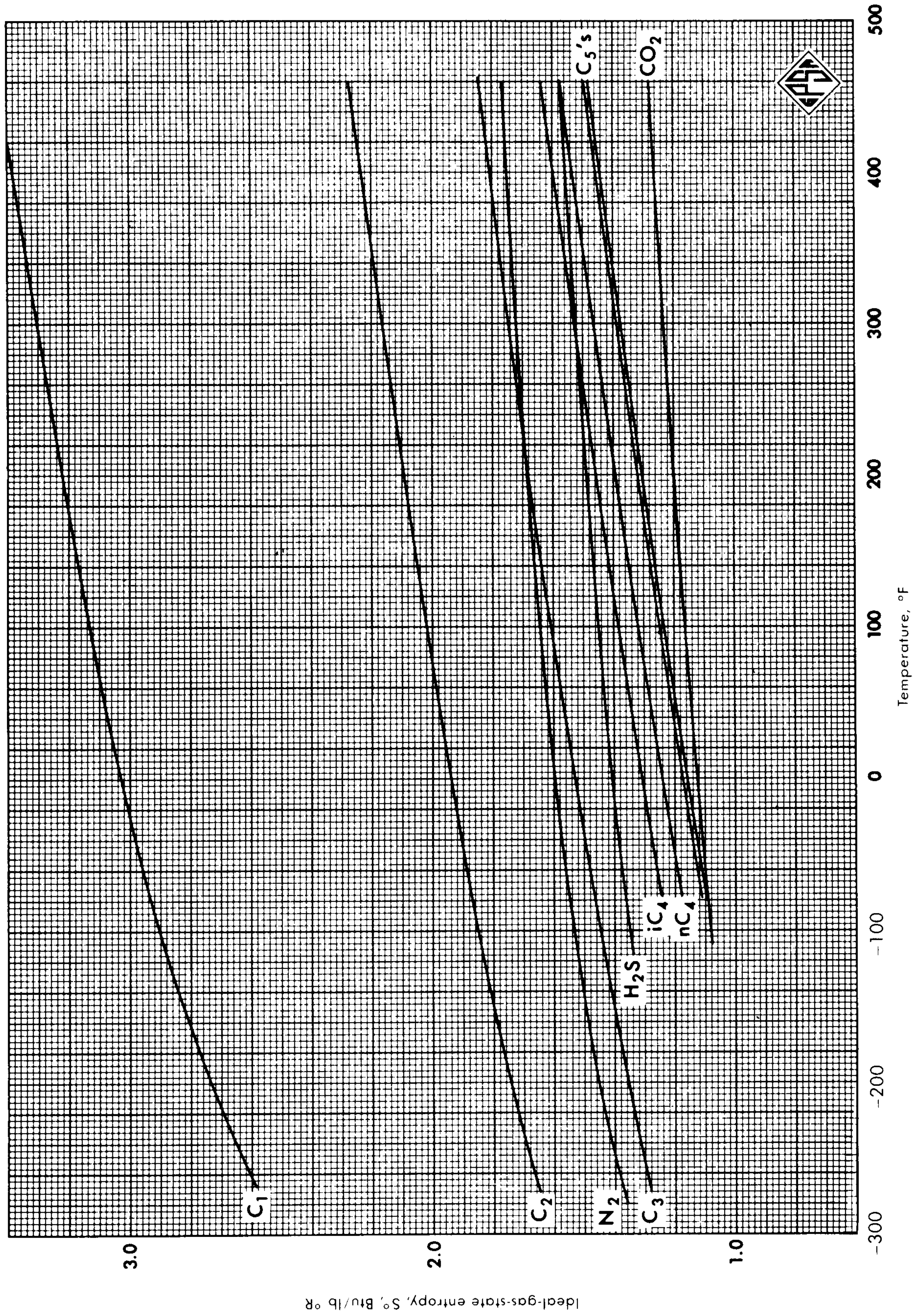

FIG. 24-20

Effect of Pressure on Entropy (Simple Fluid)

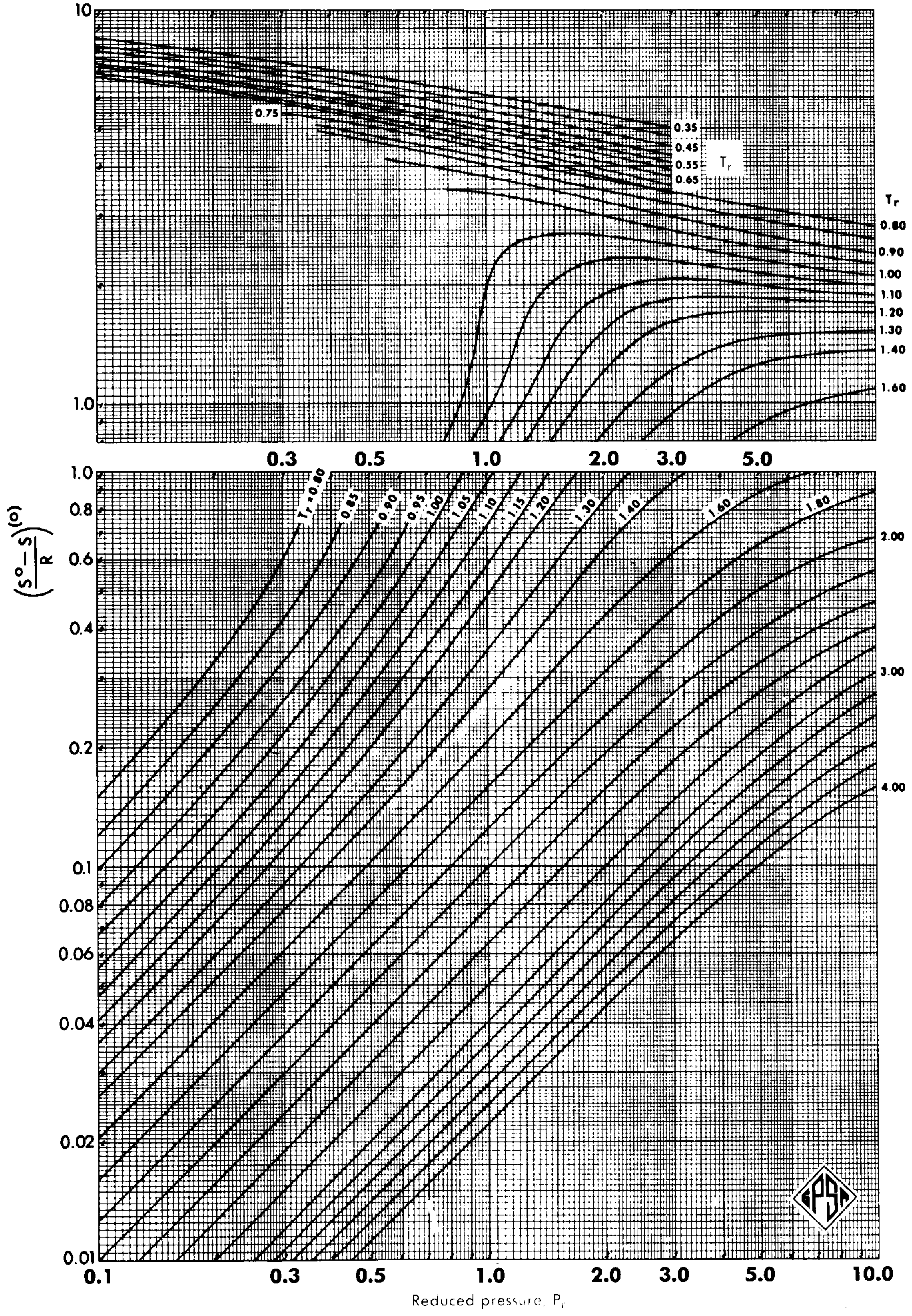

FIG. 24-21

Effect of Pressure on Entropy (Correction for Real Fluids)

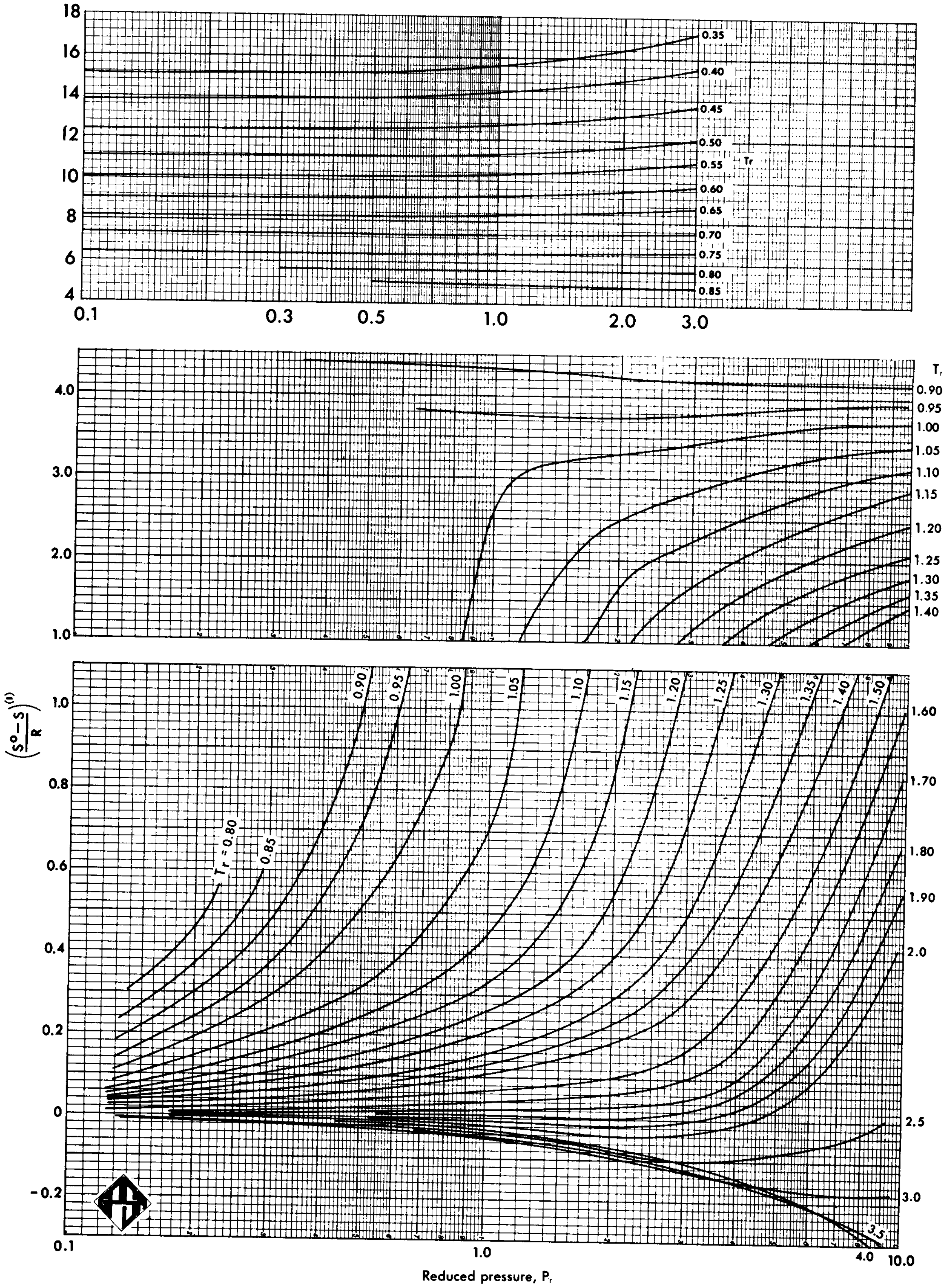

Acknowledgments

Virtual Materials Group gratefully acknowledges the assistance provided by Dr. Eric Lemmon and Dr. Michael Frenkel from the National Institute of Standards and Technology (NIST) for their assistance in the preparation of the P-H Diagrams presented in Figure 24-22 through Figure 24-33.

Substance	TPT K	NBP K	TC K	PC kPa	RHOC Mol/L	ACEN	TMIN K	TMAX K	PMAX kPa	RHOMAX Mol/L
Methane	90.6941	111.667	190.564	4599.2	10.139	.01142	90.6941	625	1000000	40.072
Ethane	90.352	184.552	305.33	4871.8	6.87	.0993	90.352	625	70000	22.419
Propane	85.48	231.06	369.825	4247.09	4.95514	.1524	85.48	623	103000	17.41
Isobutane	113.56	261.48	407.817	3640.0	3.860	.185	113.56	573	35000	12.90
n-Butane	134.87	272.6	425.125	3796.0	3.920	.2	134.87	589	69000	13.15
Isopentane	112.65	300.97	460.35	3396.0	3.271	.2296	112.65	600	1000000	10.93
n-Pentane	143.47	309.21	469.7	3370.0	3.2156	.251	143.47	600	100000	10.57
Ethylene	103.986	169.379	282.35	5041.8	7.637	.0866	103.986	450	260000	26.67
Propylene	87.95	225.46	365.57	4664.6	5.3086	.1408	100.0	600	200000	17.95
Nitrogen	63.151	77.355	126.192	3395.8	11.1839	.0372	63.151	2000	2200000	53.15
Oxygen	54.361	90.1878	154.581	5043.0	13.63	.0222	54.361	1000	82000	43.348
Carbon Dioxide	216.592	194.75	304.1282	7377.3	10.6249	.22394	216.592	1100	800000	37.24

TPT	Triple point temperature
NBP	Normal Boiling Point
TC	Critical Temperature
PC	Critical Pressure
RHOC	Critical Density
ACEN	Acentric Factor
TMIN	Minimum Recommended Temperature
TMAX	Maximum Recommended Temperature
PMAX	Maximum Recommended Pressure
RHOMAX	Maximum Recommended Density

	Reference Temperature		Reference Pressure	
	Value (F)	Database	Value (Psia)	Database
Ethane	-297.04	NIST	1.640E-04	TRC
Methane	-296.42	NIST	1.696E+00	TRC
N2	-346.00	NIST	1.816E+00	TRC
CO2	-69.80	NIST	7.512E+01	TRC
Ethylene	-272.50	NIST	1.827E-02	TRC
Propane	-305.81	NIST	2.451E-08	TRC
Propylene	-279.67	NIST	1.349E-07	TRC
I-Butane	-255.26	NIST	1.749E-06	TRC
n-Butane	-216.90	NIST	9.770E-05	TRC
I-Pentane	-256.90	TRC	1.755E-08	TRC
n-Pentane	-201.42	NIST	1.107E-05	TRC
Oxygen	-361.82	NIST	2.176E-02	TRC

FIG. 24-22 Nitrogen P-H Diagram

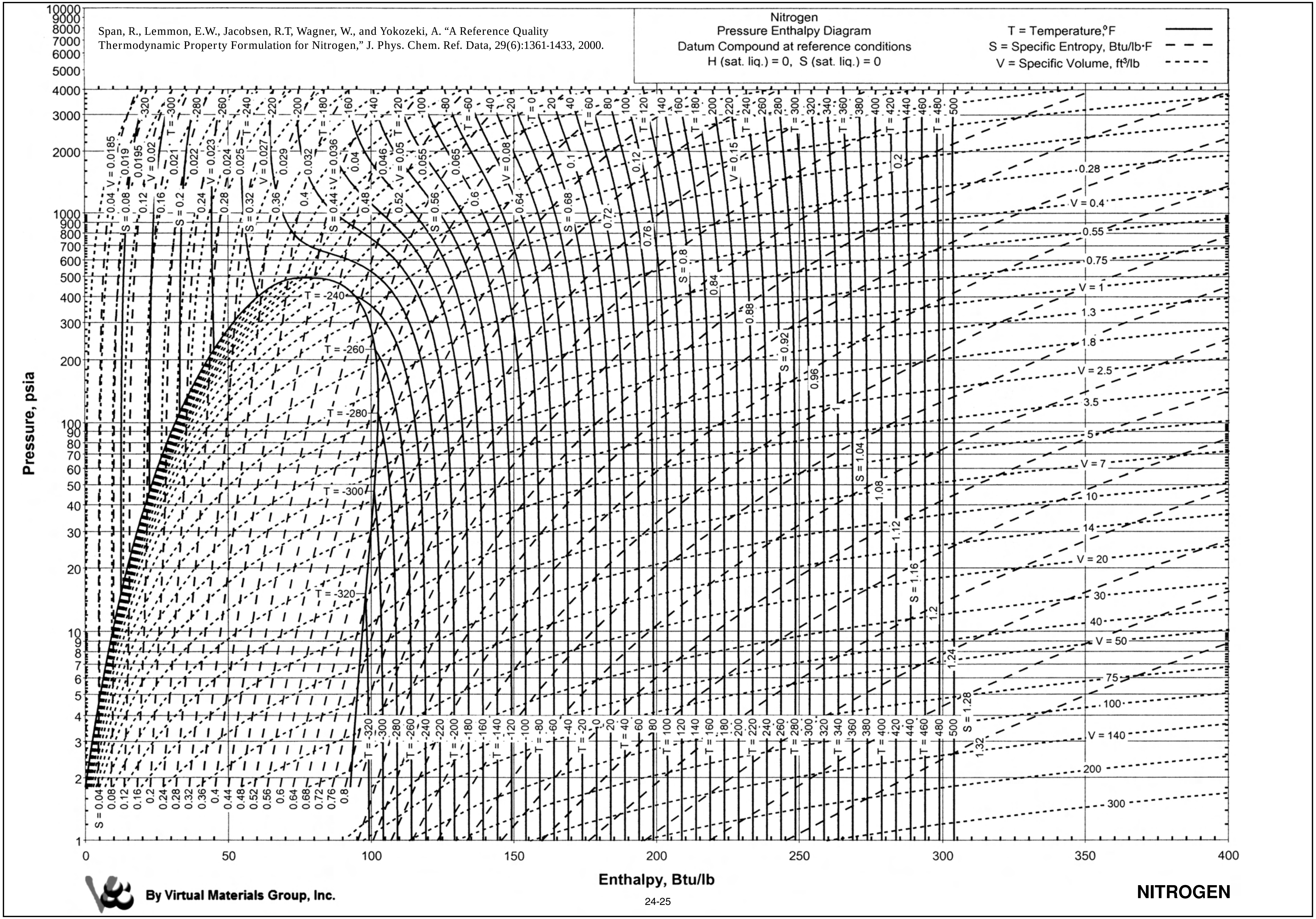

Span, R., Lemmon, E.W., Jacobsen, R.T, Wagner, W., and Yokozeki, A. “A Reference Quality Thermodynamic Property Formulation for Nitrogen,” J. Phys. Chem. Ref. Data, 29(6):1361-1433, 2000.

FIG. 24-23 Carbon Dioxide P-H Diagram

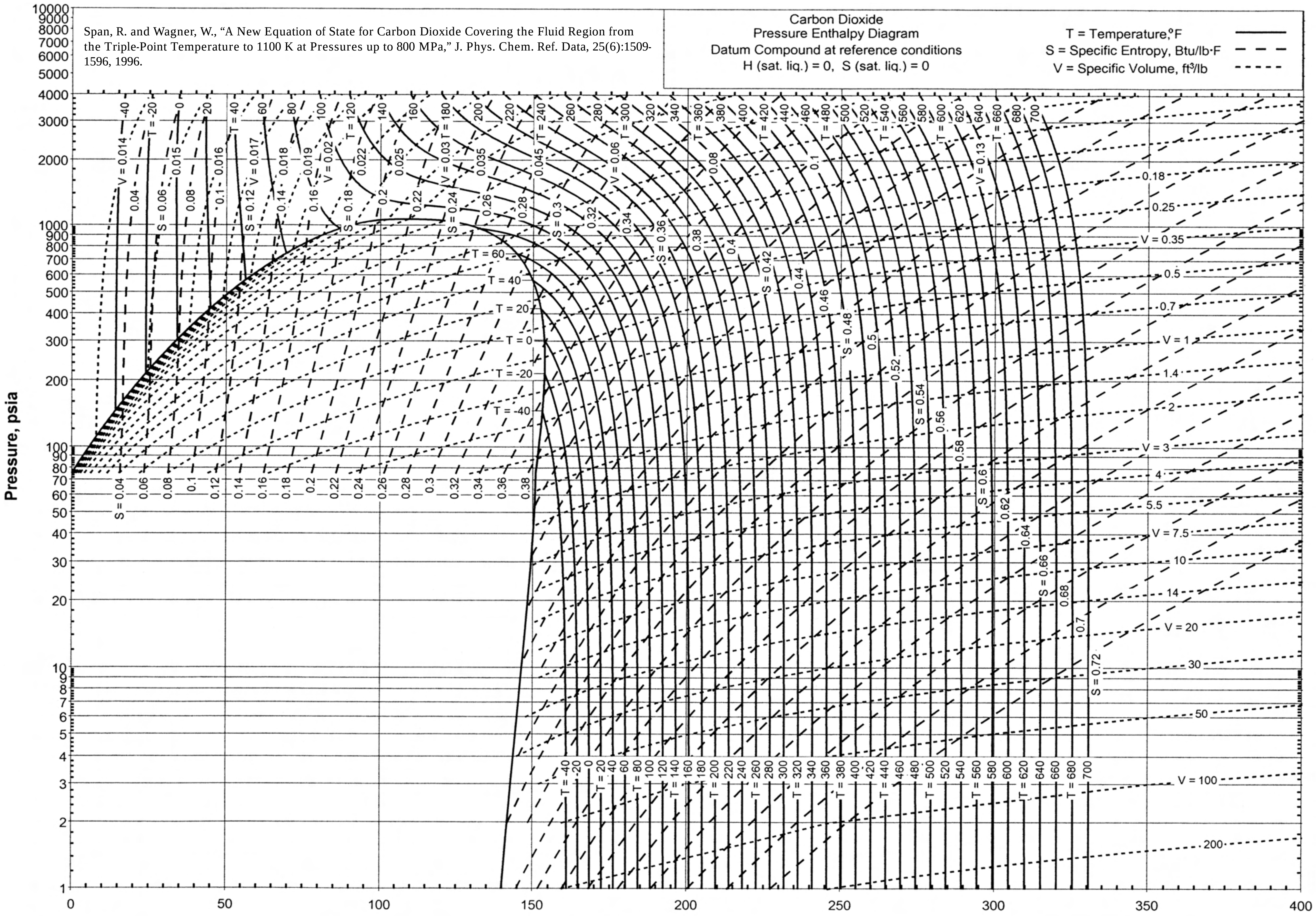

Span, R. and Wagner, W., "A New Equation of State for Carbon Dioxide Covering the Fluid Region from the Triple-Point Temperature to 1100 K at Pressures up to 800 MPa," J. Phys. Chem. Ref. Data, 25(6):1509-1596, 1996.

By Virtual Materials Group, Inc.

CARBON DIOXIDE

FIG. 24-24 Methane P-H Diagram

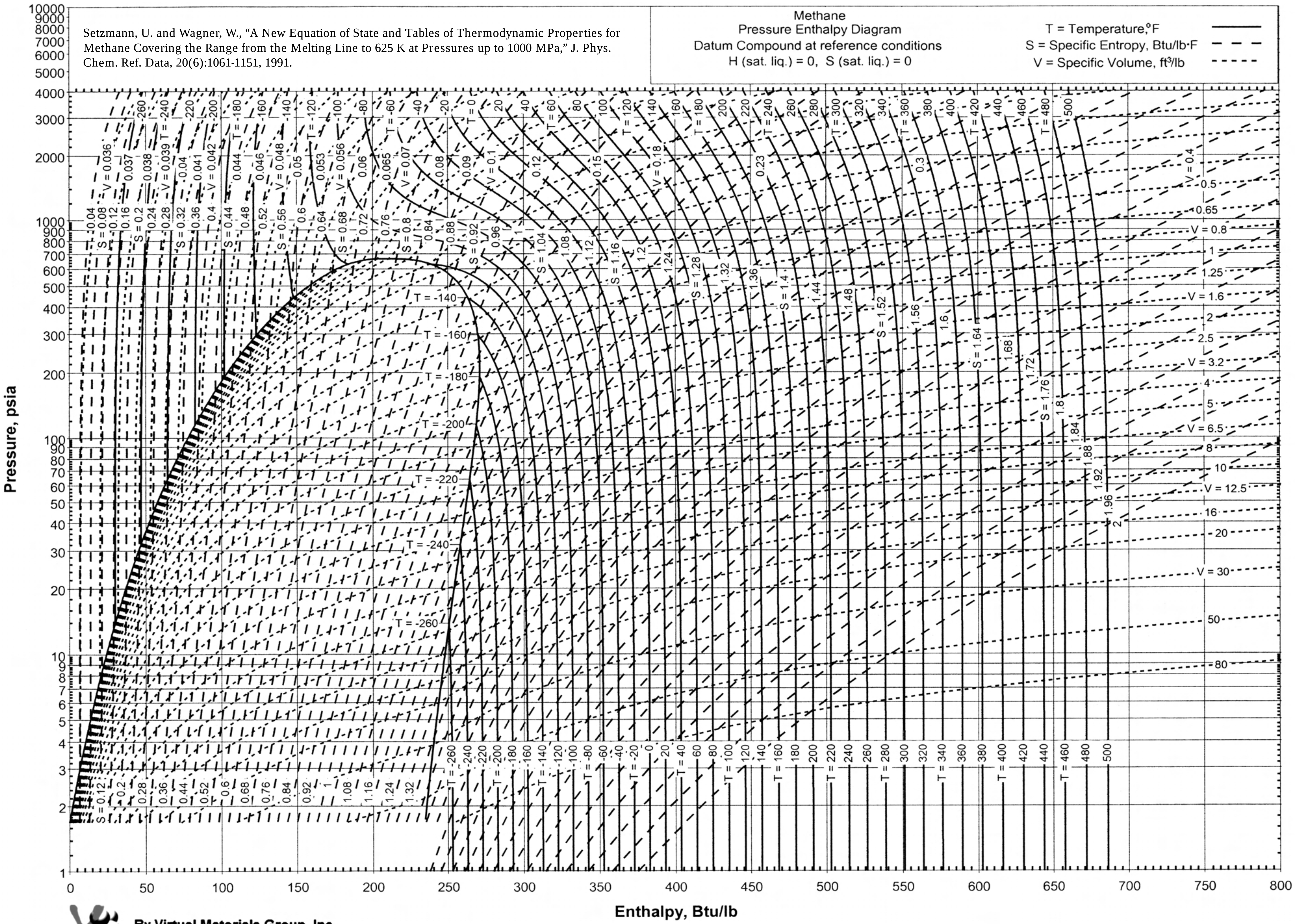

Setzmann, U. and Wagner, W., "A New Equation of State and Tables of Thermodynamic Properties for Methane Covering the Range from the Melting Line to 625 K at Pressures up to 1000 MPa," J. Phys. Chem. Ref. Data, 20(6):1061-1151, 1991.

By Virtual Materials Group, Inc.

METHANE

FIG. 24-25 Ethane P-H Diagram

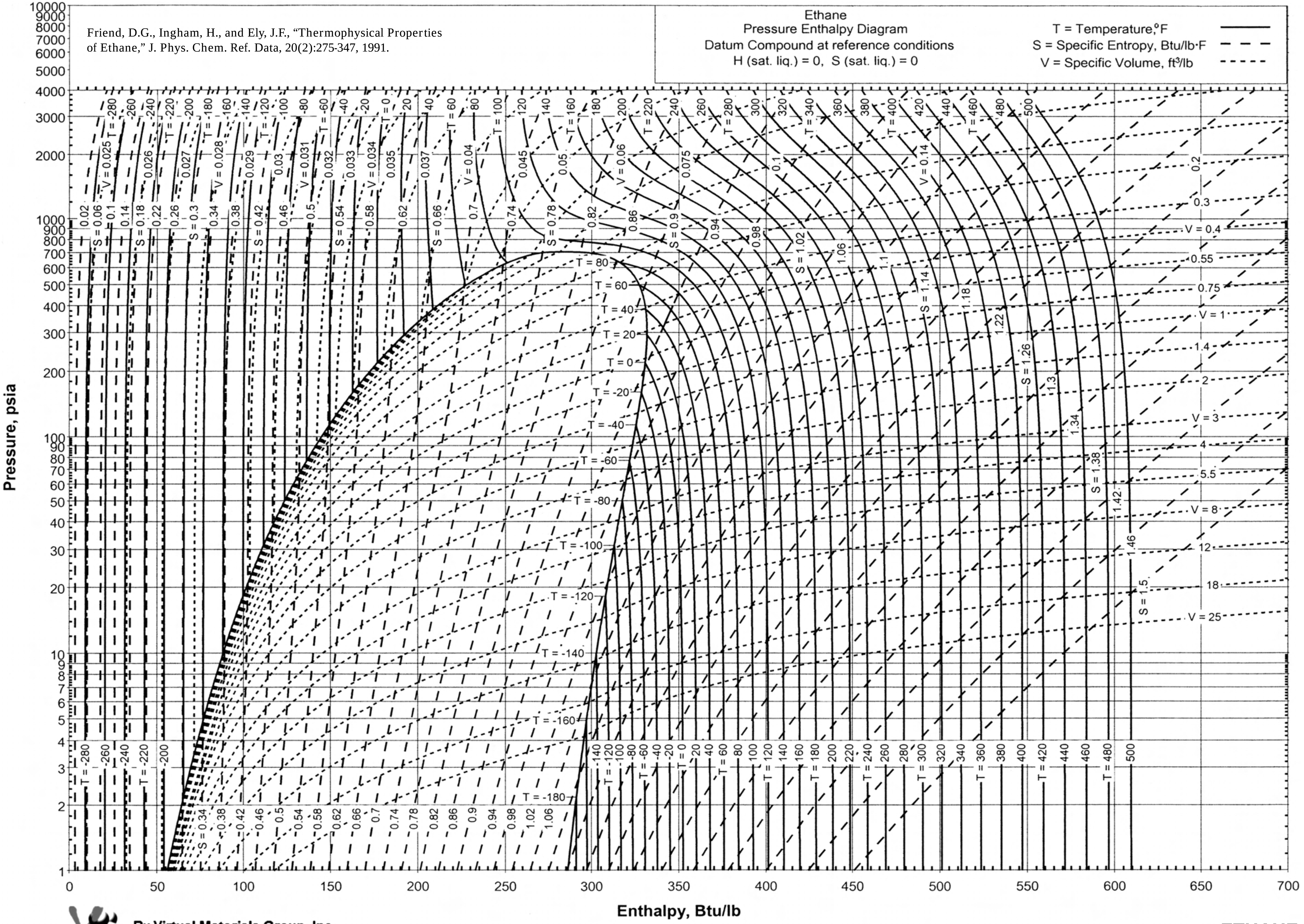

Friend, D.G., Ingham, H., and Ely, J.F., “Thermophysical Properties of Ethane,” J. Phys. Chem. Ref. Data, 20(2):275-347, 1991.

By Virtual Materials Group, Inc.

ETHANE

FIG. 24-26 Ethylene P-H Diagram

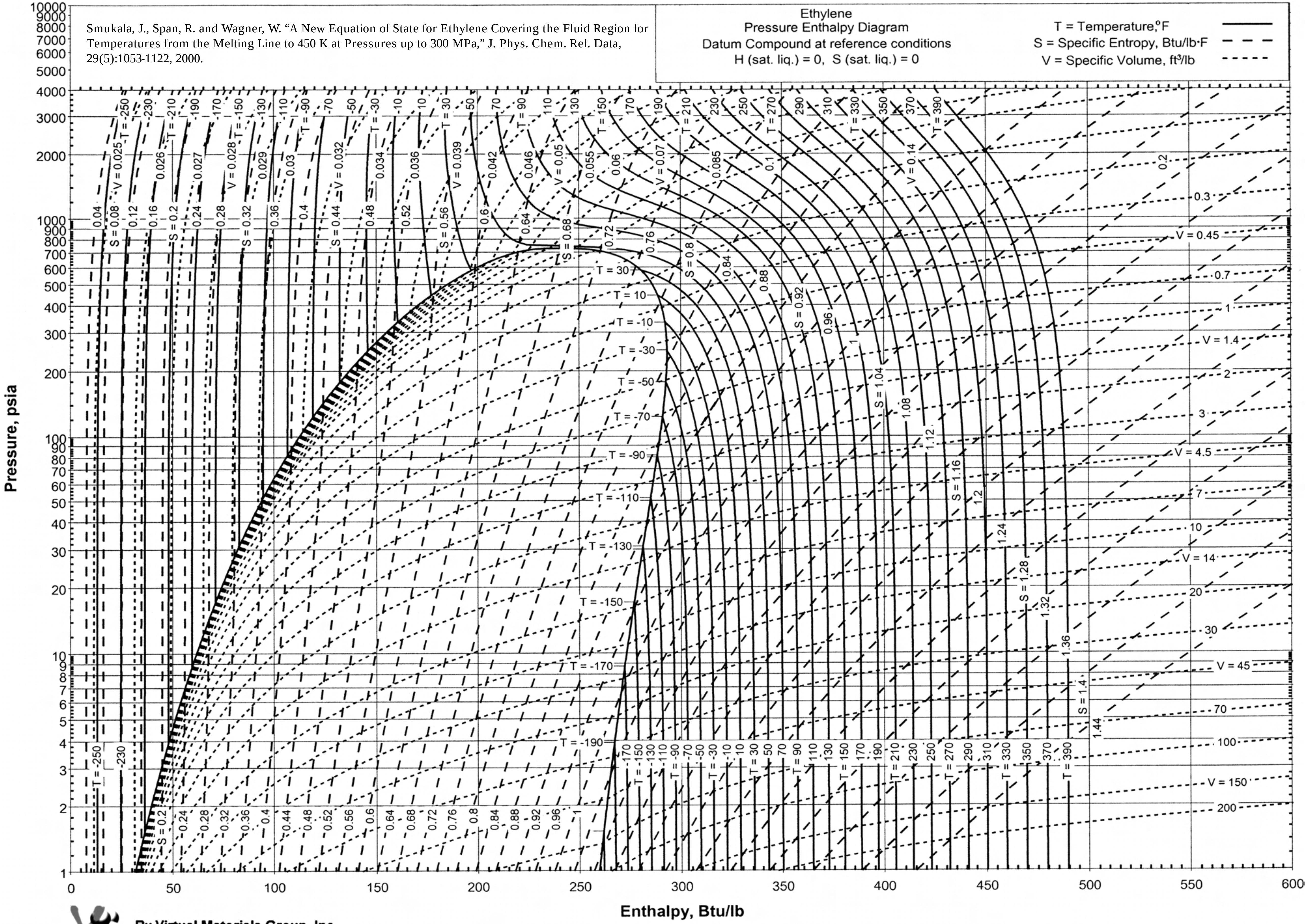

Smukala, J., Span, R. and Wagner, W. "A New Equation of State for Ethylene Covering the Fluid Region for Temperatures from the Melting Line to 450 K at Pressures up to 300 MPa," J. Phys. Chem. Ref. Data, 29(5):1053-1122, 2000.

By Virtual Materials Group, Inc.

FIG. 24-27 Propane P-H Diagram

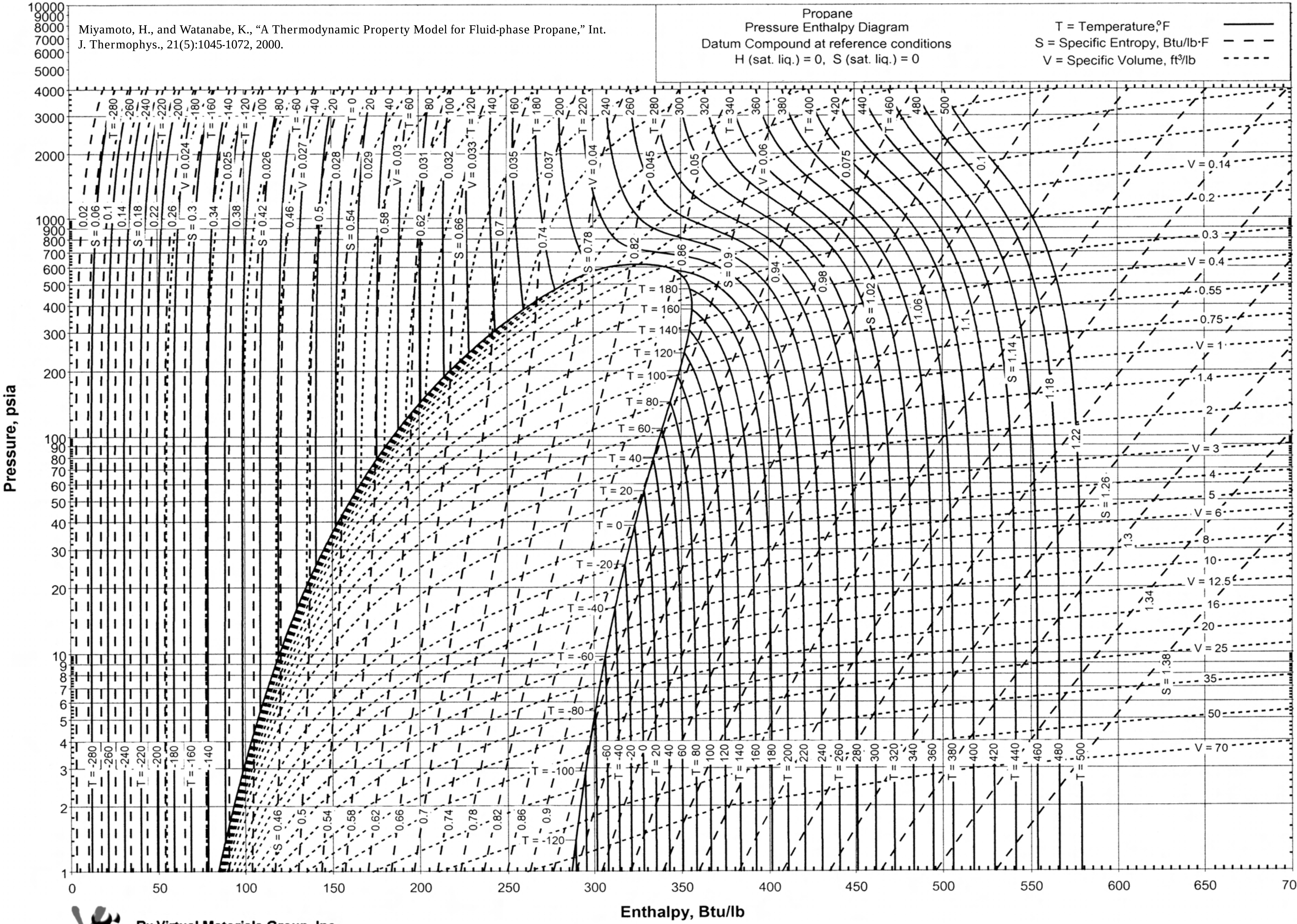
Miyamoto, H., and Watanabe, K., “A Thermodynamic Property Model for Fluid-phase Propane,” Int. J. Thermophys., 21(5):1045-1072, 2000.

By Virtual Materials Group, Inc.

PROPANE

FIG. 24-28 Propylene P-H Diagram

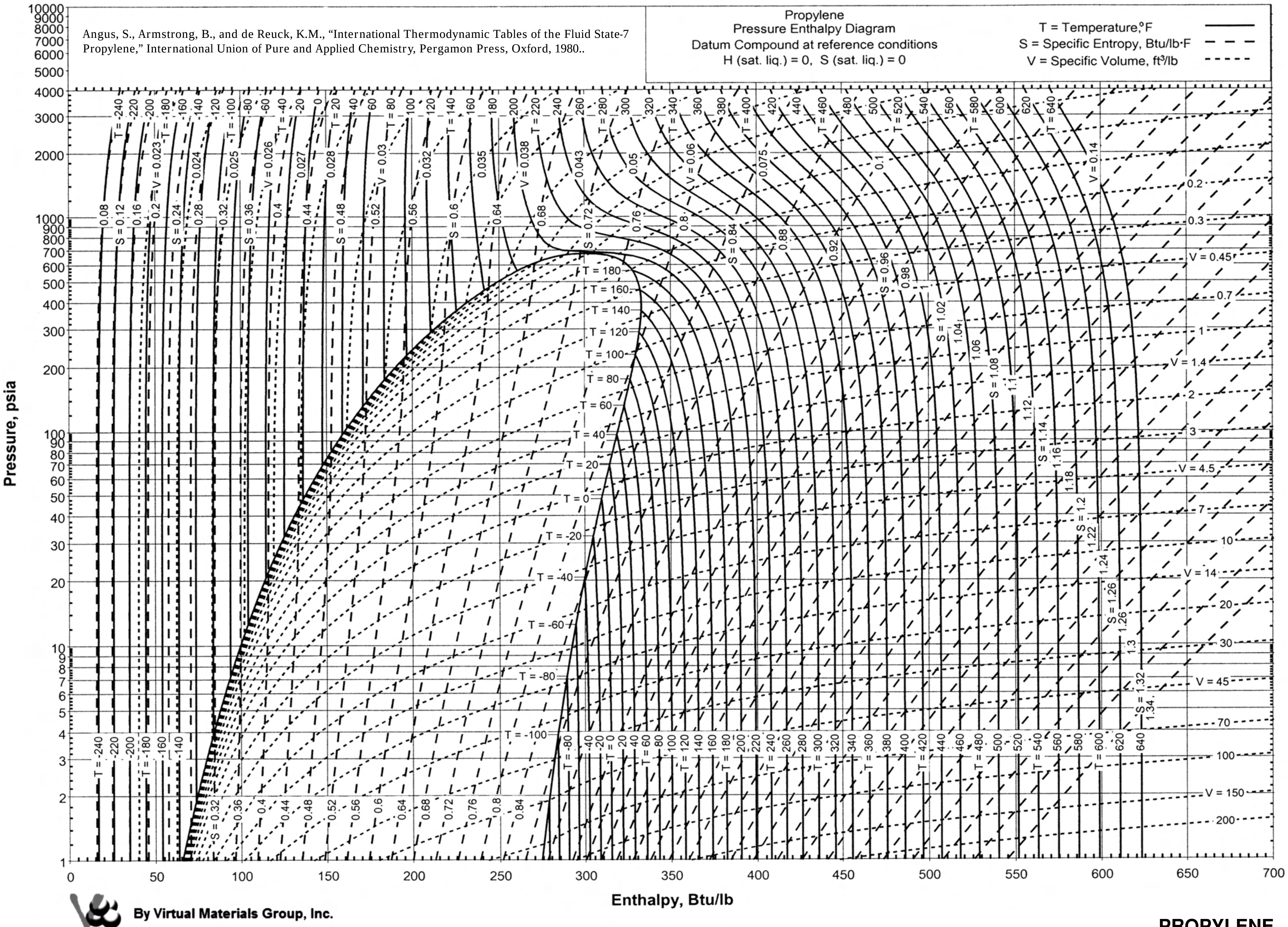

Angus, S., Armstrong, B., and de Reuck, K.M., “International Thermodynamic Tables of the Fluid State-7 Propylene,” International Union of Pure and Applied Chemistry, Pergamon Press, Oxford, 1980..

PROPYLENE

FIG. 24-29 i-Butane P-H Diagram

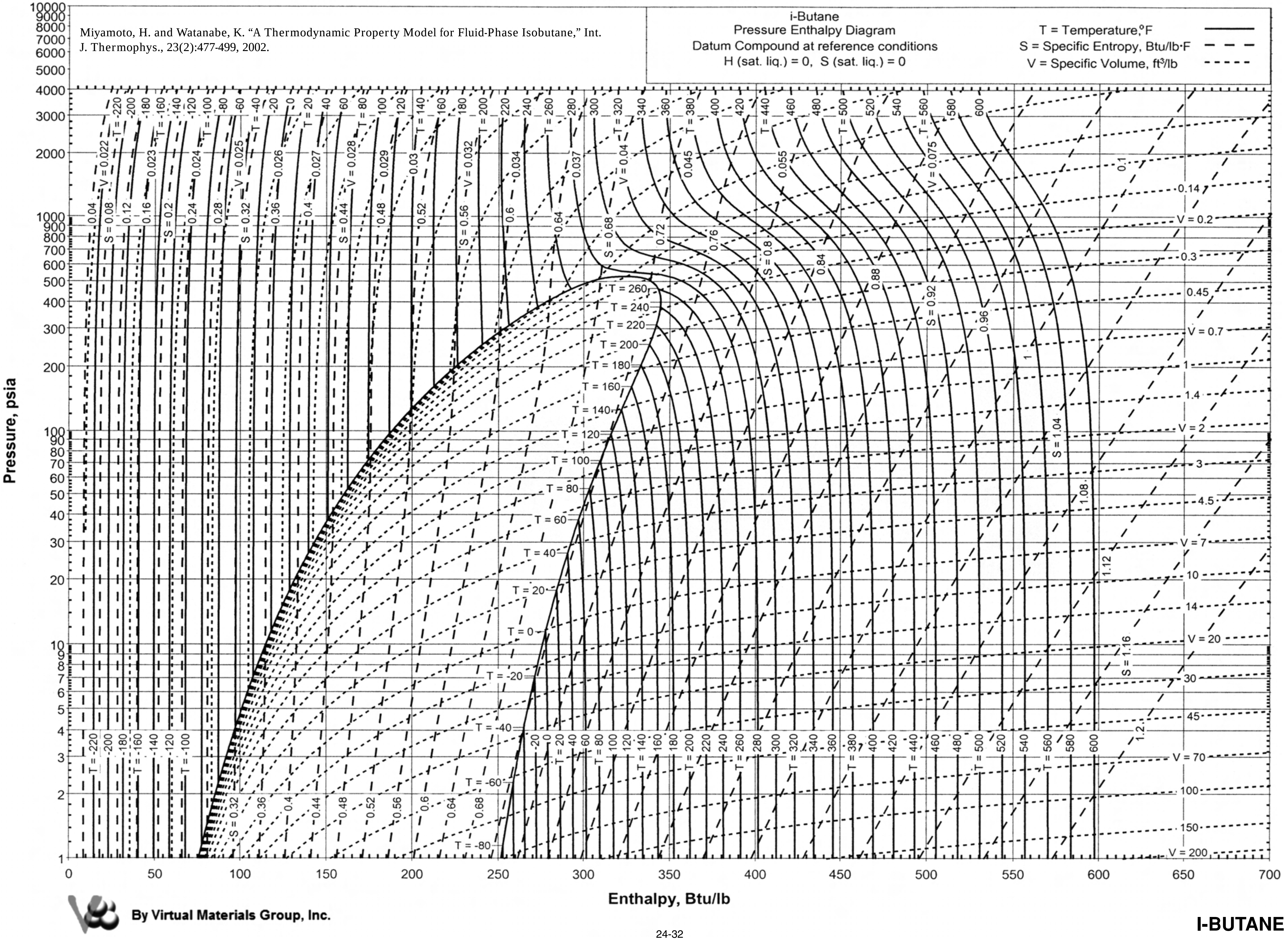

Miyamoto, H. and Watanabe, K. "A Thermodynamic Property Model for Fluid-Phase Isobutane," Int. J. Thermophys., 23(2):477-499, 2002.

By Virtual Materials Group, Inc.

FIG. 24-30 n-Butane P-H Diagram

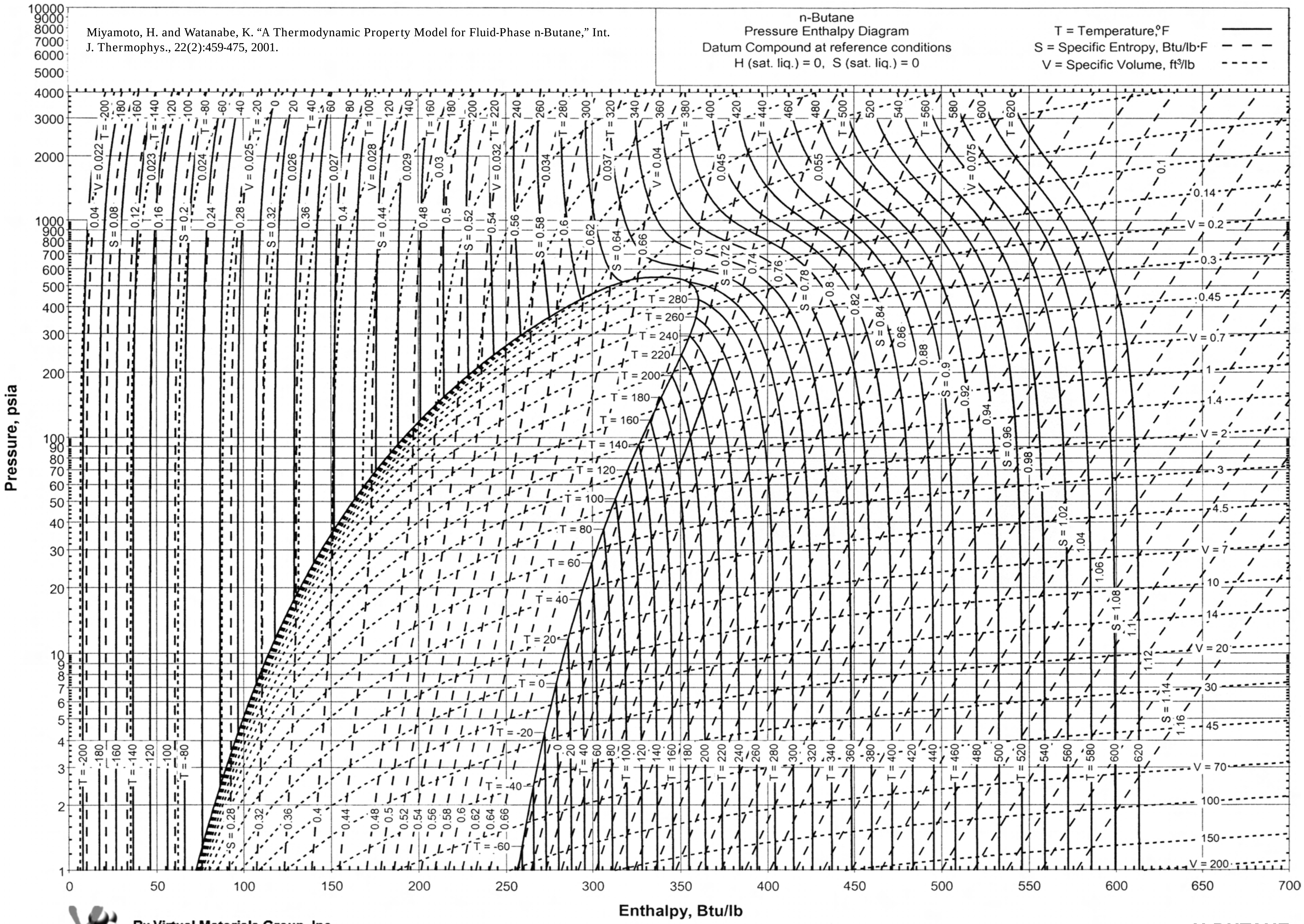

Miyamoto, H. and Watanabe, K. "A Thermodynamic Property Model for Fluid-Phase n-Butane," Int. J. Thermophys., 22(2):459-475, 2001.

By Virtual Materials Group, Inc.

N-BUTANE

FIG. 24-31 i-Pentane P-H Diagram

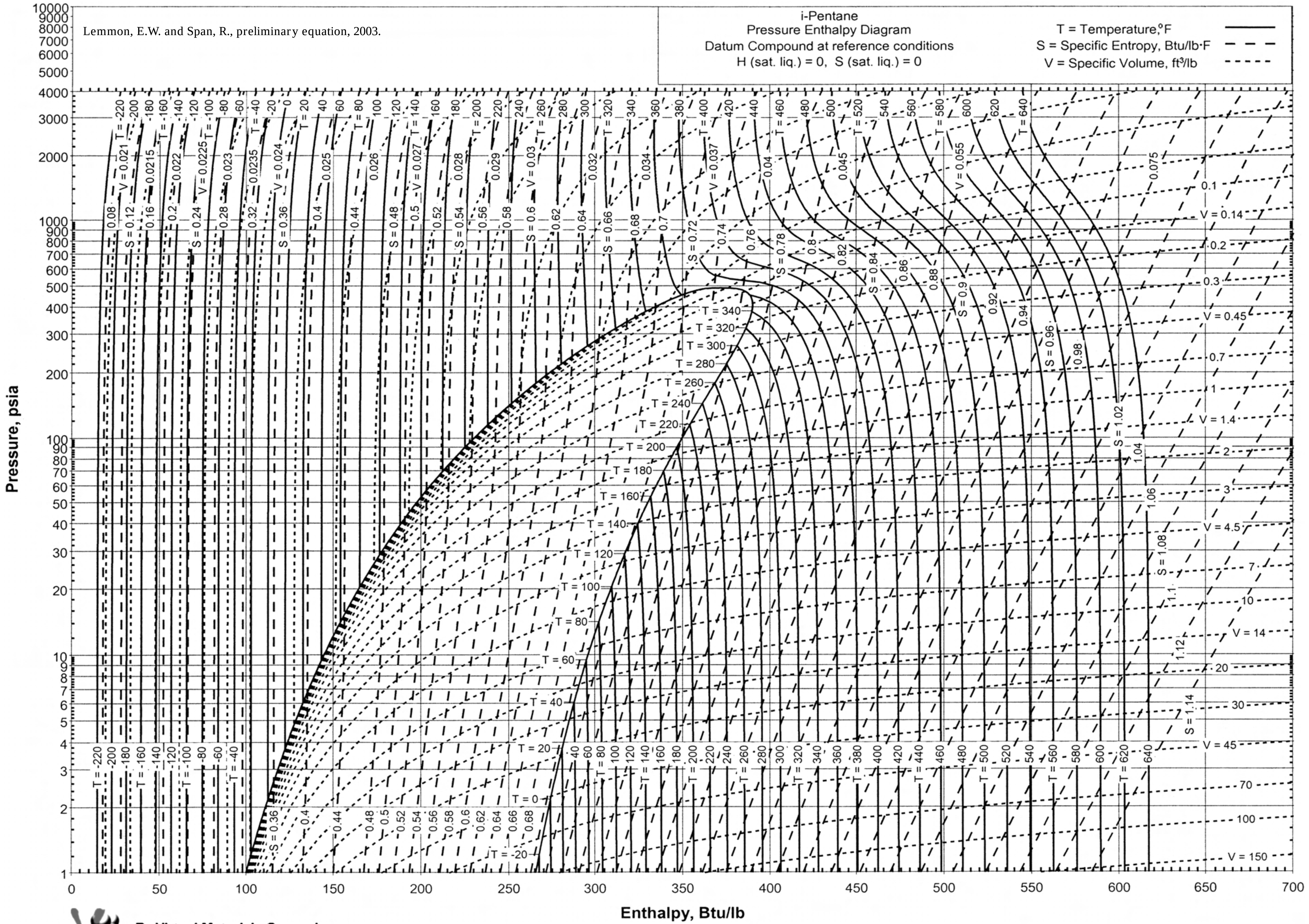

By Virtual Materials Group, Inc.

I-PENTANE

FIG. 24-32 n-Pentane P-H Diagram

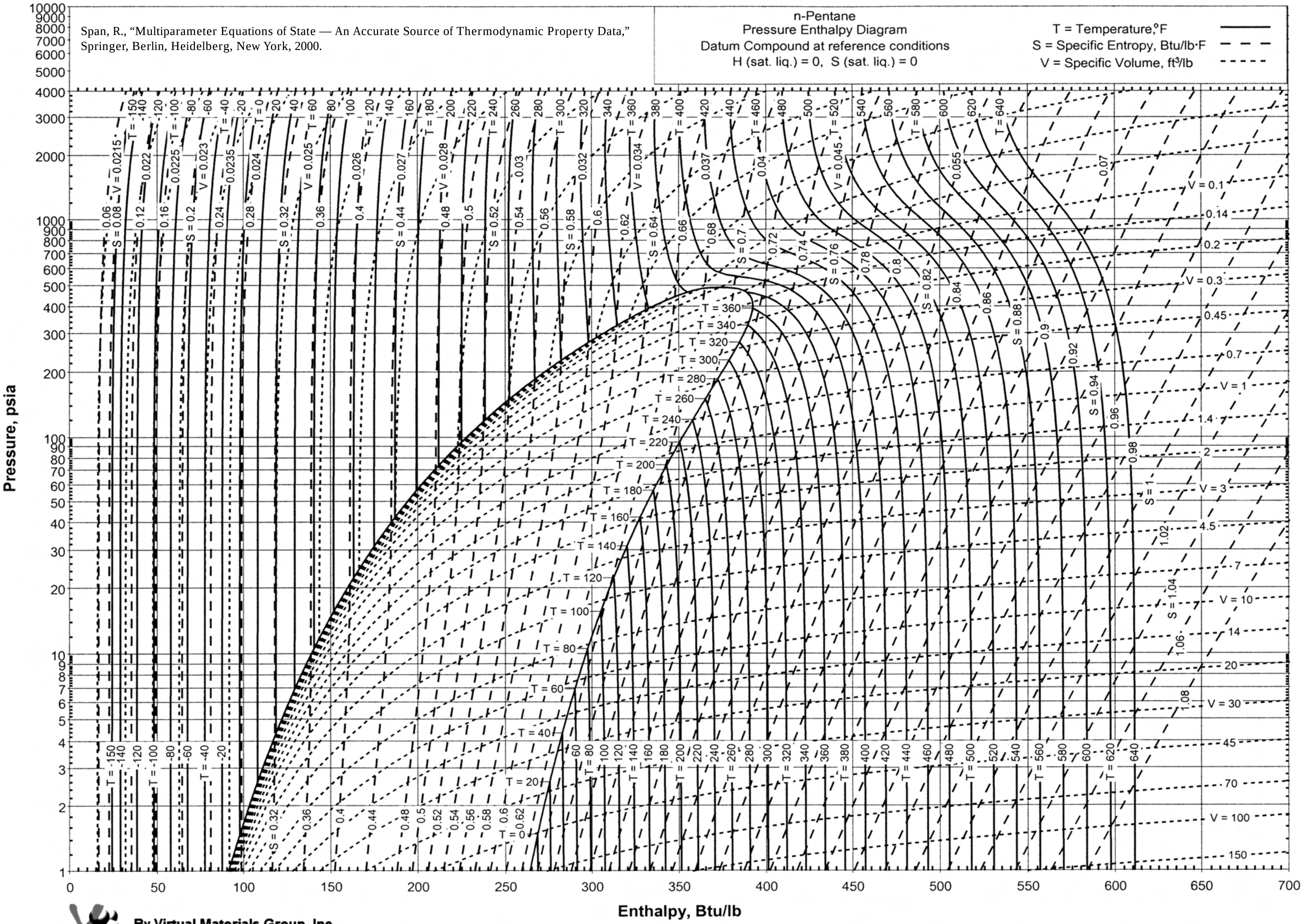

Span, R., "Multiparameter Equations of State — An Accurate Source of Thermodynamic Property Data," Springer, Berlin, Heidelberg, New York, 2000.

By Virtual Materials Group, Inc.

N-PENTANE

FIG. 24-33 Oxygen P-H Diagram

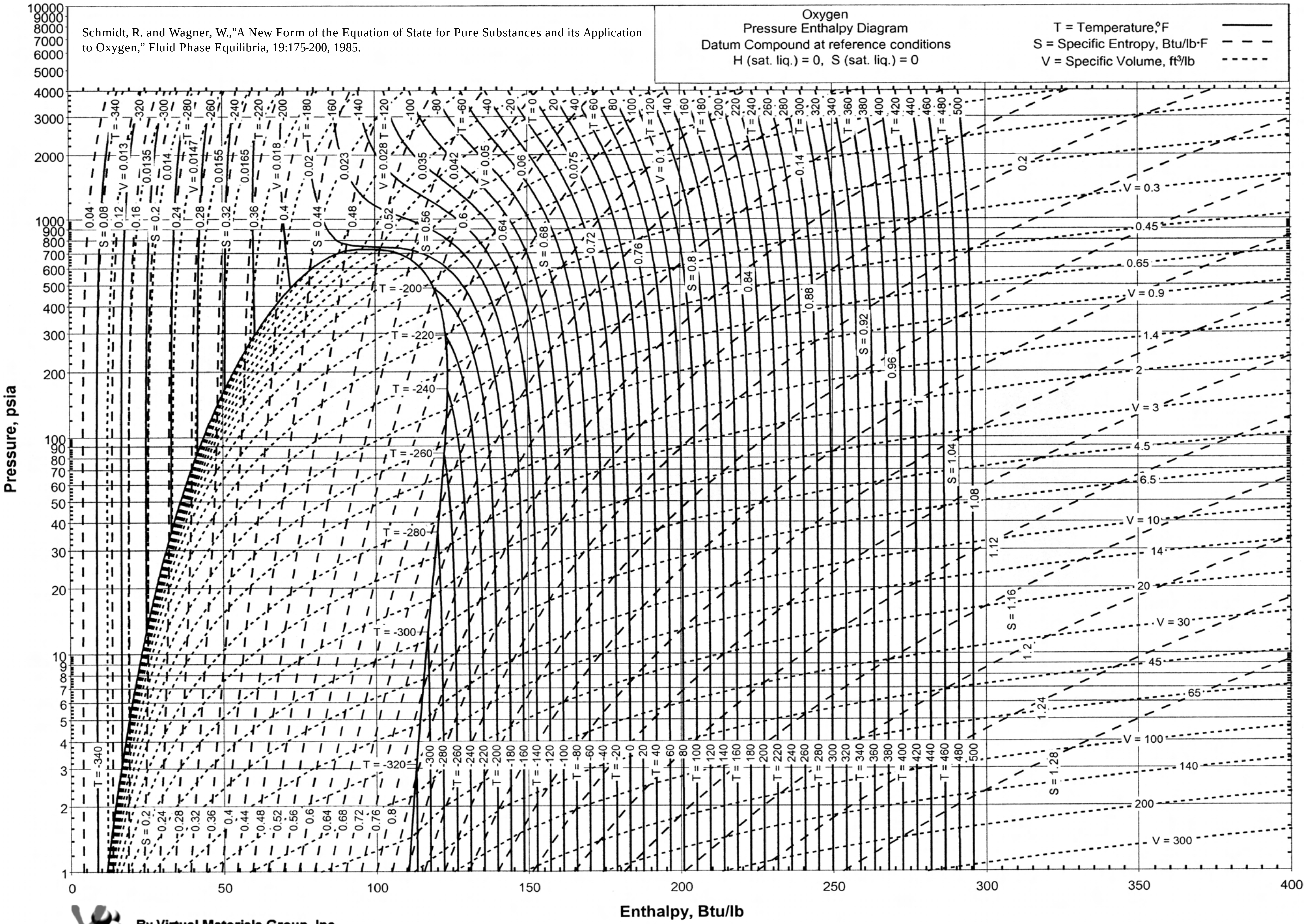

Schmidt, R. and Wagner, W.,"A New Form of the Equation of State for Pure Substances and its Application to Oxygen," Fluid Phase Equilibria, 19:175-200, 1985.

By Virtual Materials Group, Inc.

FIG. 24-34

Thermodynamic Properties of Water

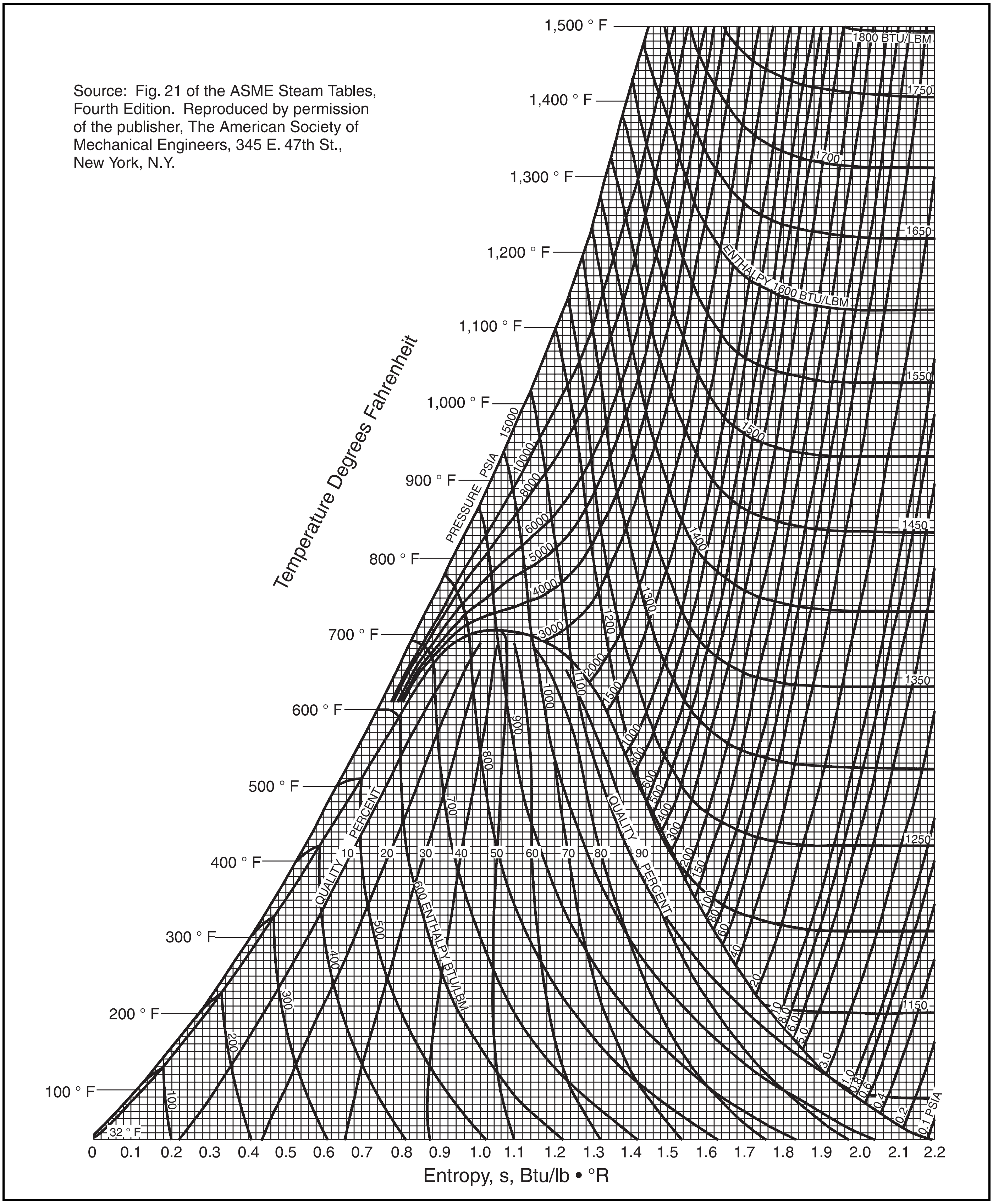

Source: Fig. 21 of the ASME Steam Tables, Fourth Edition. Reproduced by permission of the publisher, The American Society of Mechanical Engineers, 345 E. 47th St., New York, N.Y.

FIG. 24-35

Thermodynamic Properties of Water

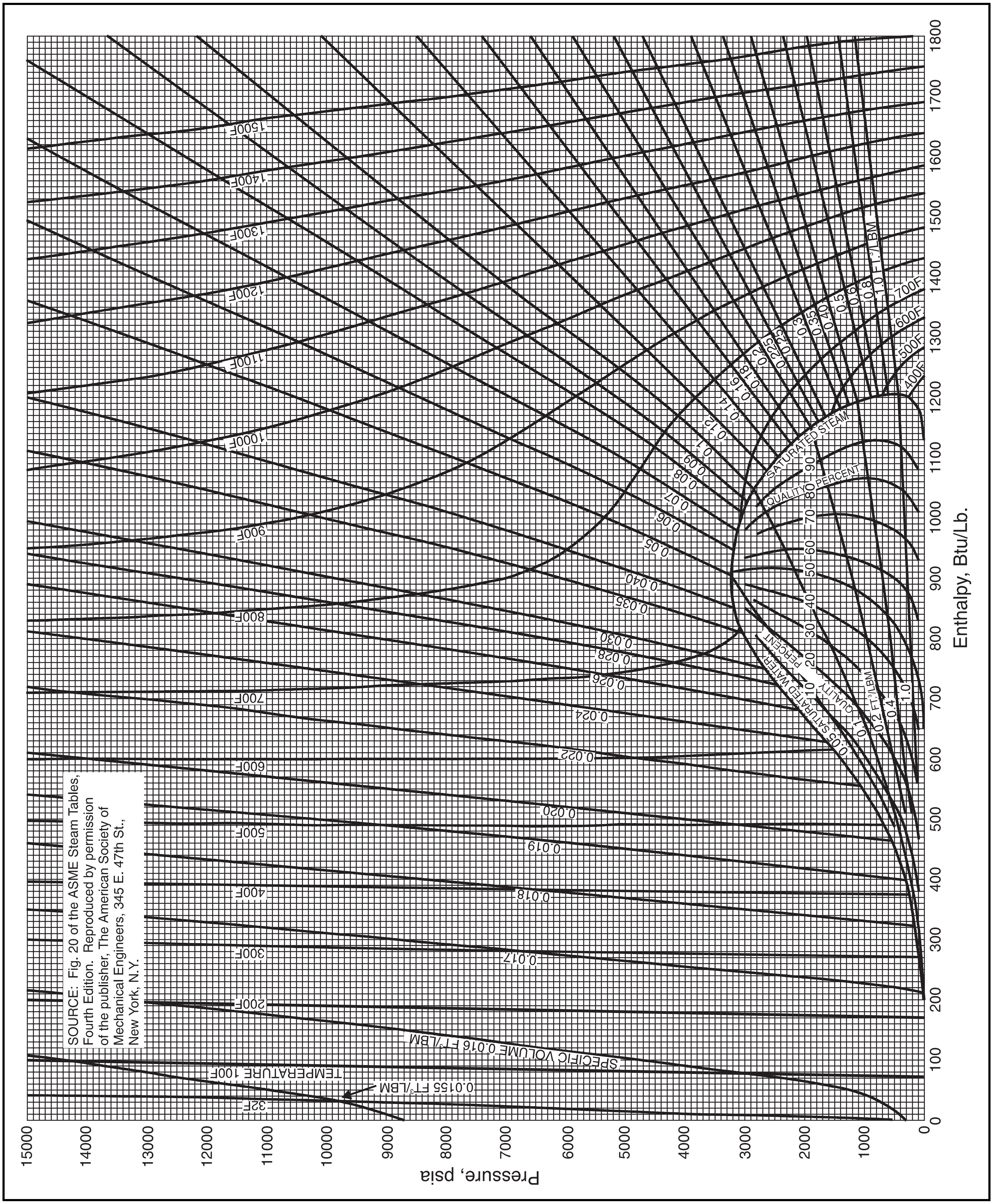

SOURCE: Fig. 20 of the ASME Steam Tables, Fourth Edition. Reproduced by permission of the publisher, The American Society of Mechanical Engineers, 345 E. 47th St., New York, N.Y.

FIG. 24-36

Water Properties at Saturation Pressure

Temp °F	Pressure lb/in^2 abs	Specific volume		Density		Conversion factor ft/lb/in^2	Temp °F
		ft^3/lb	gal/lb	lb/ft^3	gm/cm^3		
32	.0885	.01602	.1198	62.42	.9999	2.307	32
33	.0922	.01602	.1198	62.42	.9999	2.307	33
34	.0960	.01602	.1198	62.42	.9999	2.307	34
35	.1000	.01602	.1198	62.424	1.0000	2.307	35
36	.1040	.01602	.1198	62.425	1.0000	2.307	36
37	.1082	.01602	.1198	62.426	1.0000	2.307	37
38	.1126	.01602	.1198	62.426	1.0000	2.307	38
39	.1171	.01602	.1198	62.426	1.0000	2.307	39
40	.1217	.01602	.1198	62.426	1.0000	2.307	40
41	.1265	.01602	.1198	62.426	1.0000	2.307	41
42	.1315	.01602	.1198	62.425	1.0000	2.307	42
43	.1367	.01602	.1198	62.424	1.0000	2.307	43
44	.1420	.01602	.1198	62.42	.9999	2.307	44
45	.1475	.01602	.1198	62.42	.9999	2.307	45
46	.1532	.01602	.1198	62.42	.9999	2.307	46
47	.1591	.01603	.1199	62.42	.9999	2.307	47
48	.1653	.01603	.1199	62.41	.9998	2.307	48
49	.1716	.01603	.1199	62.41	.9998	2.307	49
50	.1781	.01603	.1199	62.41	.9997	2.307	50
51	.1849	.01603	.1199	62.41	.9997	2.307	51
52	.1918	.01603	.1199	62.40	.9996	2.308	52
53	.1990	.01603	.1199	62.40	.9996	2.308	53
54	.2064	.01603	.1199	62.40	.9995	2.308	54
55	.2141	.01603	.1199	62.39	.9994	2.308	55
56	.2220	.01603	.1199	62.39	.9994	2.308	56
57	.2302	.01603	.1199	62.38	.9993	2.308	57
58	.2386	.01604	.1200	62.38	.9992	2.308	58
59	.2473	.01604	.1200	62.37	.9991	2.309	59
60	.2563	.01604	.1200	62.37	.9990	2.309	60
62	.2751	.01604	.1200	62.36	.9989	2.309	62
64	.2951	.01605	.1201	62.35	.9987	2.310	64
66	.3164	.01605	.1201	62.33	.9985	2.310	66
68	.3390	.01605	.1201	62.32	.9982	2.311	68
70	.3631	.01606	.1201	62.30	.9980	2.311	70
75	.4298	.01607	.1202	62.27	.9974	2.313	75
80	.5069	.01608	.1203	62.22	.9966	2.315	80
85	.5959	.01609	.1204	62.17	.9959	2.316	85
90	.6982	.01610	.1205	62.12	.9950	2.318	90
95	.8153	.01612	.1206	62.06	.9941	2.320	95
100	.9492	.01613	.1207	62.00	.9931	2.323	100
110	1.275	.01617	.1210	61.84	.9906	2.328	110
120	1.692	.01620	.1212	61.73	.9888	2.333	120
130	2.223	.01625	.1215	61.54	.9857	2.340	130
140	2.889	.01629	.1219	61.39	.9833	2.346	140
150	3.718	.01634	.1222	61.20	.9803	2.353	150
160	4.741	.01639	.1226	61.01	.9773	2.360	160
170	5.992	.01645	.1230	60.79	.9738	2.369	170
180	7.510	.01651	.1235	60.57	.9702	2.377	180
190	9.339	.01657	.1240	60.35	.9667	2.386	190
200	11.53	.01663	.1244	60.13	.9632	2.395	200
210	14.12	.01670	.1249	59.88	.9592	2.405	210
220	17.19	.01677	.1254	59.63	.9552	2.415	220
230	20.78	.01684	.1260	59.38	.9512	2.425	230
240	24.97	.01692	.1266	59.10	.9467	2.436	240
250	29.83	.01700	.1272	58.82	.9423	2.448	250
260	35.43	.01709	.1278	58.51	.9373	2.461	260
270	41.85	.01717	.1284	58.24	.9331	2.472	270
280	49.20	.01726	.1291	57.94	.9281	2.485	280
290	57.56	.01735	.1298	57.64	.9232	2.498	290
300	67.01	.01745	.1305	57.31	.9180	2.513	300
310	77.68	.01755	.1313	56.98	.9127	2.527	310
320	89.66	.01765	.1320	56.66	.9076	2.542	320
330	103.1	.01776	.1329	56.31	.9019	2.557	330
340	118.0	.01787	.1337	55.96	.8964	2.573	340
350	135	.01799	.1346	55.59	.8904	2.591	350
360	153	.01811	.1355	55.22	.8845	2.608	360
370	173	.01823	.1364	54.85	.8787	2.625	370
380	196	.01836	.1373	54.47	.8725	2.644	380
390	220	.01850	.1384	54.05	.8659	2.664	390
400	247	.01864	.1394	53.65	.8594	2.684	400
410	277	.01878	.1405	53.25	.8529	2.704	410
420	309	.01894	.1417	52.80	.8457	2.727	420
430	344	.01910	.1429	52.36	.8387	2.750	430
440	382	.01926	.1441	51.92	.8317	2.773	440
450	423	.0194	.145	51.5	.826	2.79	450
460	467	.0196	.147	51.0	.817	2.82	460
470	515	.0198	.148	50.5	.809	2.85	470
480	566	.0200	.150	50.0	.801	2.88	480
490	621	.0202	.151	49.5	.793	2.91	490
500	681	.0204	.153	49.0	.785	2.94	500
510	744	.0207	.155	48.3	.774	2.98	510
520	812	.0209	.156	47.8	.766	3.01	520
530	885	.0212	.159	47.2	.756	3.05	530
540	963	.0215	.161	46.5	.745	3.10	540
550	1045	.0218	.163	45.9	.735	3.14	550
560	1133	.0221	.165	45.2	.725	3.18	560
570	1227	.0224	.168	44.6	.715	3.23	570
580	1326	.0228	.171	43.9	.703	3.28	580
590	1431	.0232	.174	43.1	.690	3.34	590
600	1543	.0236	.177	42.4	.679	3.40	600
610	1661	.0241	.180	41.5	.665	3.47	610
620	1787	.0247	.185	40.5	.649	3.56	620
630	1919	.0253	.189	39.5	.633	3.64	630
640	2060	.0260	.194	38.5	.616	3.74	640
650	2208	.0268	.200	37.3	.598	3.86	650
670	2532	.0290	.217	34.5	.552	4.18	670
690	2895.	.0328	.245	30.5	.488	4.71	690
705.4	3206.	.0503	.376	19.9	.318	7.24	705.4

FIG. 24-37

Saturated Steam: Temperature Table

Temp., °F	Pressure, psia	Volume cu ft/lb		Enthalpy, Btu/lb		Entropy, Btu/(lb • °F)	
		Liquid	Vapor	Liquid	Vapor	Liquid	Vapor
32.018	0.08865	0.016022	3302.4	0.000	1075.5	0.0000	2.1872
35	0.09991	0.016020	2948.1	3.002	1076.8	0.0061	2.1767
40	0.12163	0.016019	2445.8	8.027	1079.0	0.0162	2.1594
45	0.14744	0.016020	2037.8	13.044	1081.2	0.0262	2.1426
50	0.17796	0.016023	1704.8	18.054	1083.4	0.0361	2.1262
55	0.21392	0.016027	1432.0	23.059	1085.6	0.0458	2.1102
60	0.25611	0.016033	1207.6	28.060	1087.7	0.0555	2.0946
65	0.30545	0.016041	1022.1	33.057	1089.9	0.0651	2.0794
70	0.36292	0.016050	868.4	38.052	1092.1	0.0745	2.0645
75	0.42964	0.016060	740.3	43.045	1094.3	0.0839	2.0500
80	0.50683	0.016072	633.3	48.037	1096.4	0.0932	2.0359
85	0.59583	0.016085	543.6	53.027	1098.6	0.1024	2.0221
90	0.69813	0.016099	468.1	58.018	1100.8	0.1115	2.0086
95	0.81534	0.016114	404.4	63.008	1102.9	0.1206	1.9954
100	0.94294	0.016130	350.4	67.999	1105.1	0.1295	1.9825
110	1.2750	0.016165	265.39	77.98	1109.3	0.1472	1.9577
120	1.6927	0.016204	203.26	87.97	1113.6	0.1646	1.9339
130	2.2230	0.016247	157.33	97.96	1117.8	0.1817	1.9112
140	2.8892	0.016293	122.98	123.00	1122.0	0.1985	1.8895
150	3.7184	0.016343	97.07	117.95	1126.1	0.2150	1.8686
160	4.7414	0.016395	77.27	127.96	1130.2	0.2313	1.8487
170	5.9926	0.016451	62.08	137.97	1134.2	0.2473	1.8295
180	7.5110	0.016510	50.225	148.00	1138.2	0.2631	1.8111
190	9.340	0.016572	40.957	158.04	1142.1	0.2787	1.7934
200	11.526	0.016637	33.639	168.09	1146.0	0.2940	1.7764
210	14.123	0.016705	27.816	178.15	1149.7	0.3091	1.7600
212	14.696	0.016719	26.799	180.17	1150.5	0.3121	1.7568
220	17.186	0.016775	23.148	188.23	1153.4	0.3241	1.7442
230	20.779	0.016849	19.381	198.33	1157.1	0.3388	1.7290
240	24.968	0.016926	16.321	208.45	1160.6	0.3533	1.7142
250	29.825	0.017066	13.819	218.59	1164.0	0.3677	1.7000
260	35.427	0.017089	11.762	228.76	1167.4	0.3819	1.6862
270	41.856	0.017175	10.060	238.95	1170.6	0.3960	1.6729
280	49.200	0.017264	8.644	249.17	1173.8	0.4098	1.6599
290	57.550	0.01736	7.4603	259.4	1167.8	0.4236	1.6473
300	67.005	0.01745	6.4658	269.7	1179.7	0.4372	1.6351
320	89.643	0.01766	4.9138	290.4	1185.2	0.4640	1.6116
340	117.992	0.01787	3.7878	311.3	1190.1	0.4902	1.5892
360	153.01	0.01811	2.9573	332.3	1194.4	0.5161	1.5678
380	195.73	0.01836	2.3353	353.6	1198.0	0.5416	1.5473
400	247.26	0.01864	1.8630	375.1	1201.0	0.5667	1.5274
420	308.78	0.01894	1.4997	396.9	1203.1	0.5915	1.5080
440	381.54	0.01926	1.2169	419.0	1204.4	0.6161	1.4890
460	466.87	0.01961	0.99424	441.5	1204.8	0.6405	1.4704
480	566.15	0.02000	0.81717	464.5	1204.1	0.6648	1.4518
500	680.86	0.02043	0. 67492	487.9	1202.2	0.6890	1.4333
520	812.53	0.02091	0.55956	512.0	1199.0	0.7133	1.4146
540	962.79	0.02146	0.46513	536.8	1194.3	0.7378	1.3954
560	1133.38	0.02207	0.38714	562.4	1187.7	0.7625	1.3757
580	1326.17	0.02279	0.32216	589.1	1179.0	0.7876	1.3550
600	1543.2	0.02364	0.26747	617.1	1167.7	0.8134	1.3330
620	1786.9	0.02466	0.22081	646.9	1153.2	0.8403	1.3092
640	2059.9	0.02595	0.18021	679.1	1133.7	0.8686	1.2821
660	2065.7	0.02768	0.14431	714.9	1107.0	0.8995	1.2498
680	2708.6	0.03037	0.11117	758.5	1068.5	0.9365	1.2086
700	3094.3	0.03662	0.07519	825.2	991.7	0.9924	1.1359
702	3135.5	0.03824	0.06997	835.0	979.7	1.0006	1.1210
704	3177.2	0.04108	0.06300	854.2	956.2	1.0169	1.1046
705.47	3208.2	0.05078	0.05078	906.0	906.0	1.0612	1.0612

Data in the steam tables abstracted by permission from "Thermodynamic Properties of Steam" by J.H. Keenan and F.G. Keyes, published by John Wiley & Sons, Inc. 1936

FIG. 24-37 (Cont'd)

Saturated Steam: Pressure Table

Pressure, psia	Temp., °F	Volume, cu ft/lb		Enthalpy, Btu/lb		Entropy, Btu/(lb • °F)	
		Liquid	Vapor	Liquid	Vapor	Liquid	Vapor
0.10	35.02	0.016020	2945.5	3.03	1076.8	0.0061	2.1766
0.20	53.16	0.016025	1526.3	21.22	1084.7	0.0422	2.1060
0.30	64.48	0.016040	1039.7	32.54	1089.7	0.0641	2.0809
0.40	72.87	0.016056	792.1	40.92	1093.3	0.0799	2.0562
0.60	85.22	0.016085	540.1	53.25	1098.7	0.1028	2.0215
0.80	94.38	0.016112	411.69	62.39	1102.6	0.1195	1.9970
1.0	101.74	0.016136	333.60	69.73	1105.8	0.1326	1.9781
2.0	126.07	0.016230	173.76	94.03	1116.2	0.1750	1.9200
3.0	141.47	0.016300	118.73	109.42	1122.6	0.2009	1.8864
4.0	152.96	0.016358	90.64	120.92	1127.3	0.2199	1.5626
6	170.05	0.016451	61.984	138.03	1134.2	0.2174	1.8294
8	182.80	0.016527	47.345	150.87	1139.3	0.2676	1.8060
10	193.21	0.016592	38.420	161.26	1143.3	0.2836	1.7879
20	227.96	0.016834	20.087	196.27	1156.3	0.3358	1.7320
30	250.34	0.017009	13.744	218.9	1164.1	0.3682	1.6995
40	267.25	0.017151	10.4965	236.1	1169.8	0.3921	1.6765
50	281.02	0.017274	8.5140	250.2	1174.1	0.4112	1.6586
60	292.71	0.017383	7.1736	262.2	1177.6	0.4273	1.6440
70	302.93	0.017482	6.2050	272.7	1180.6	0.4411	1.6316
80	312.04	0.017573	5.4711	282.1	1183.1	0.4534	1.6208
90	320.28	0.017659	4.8953	290.7	1185.3	0.4643	1.6113
100	327.82	0.017740	4.4310	298.5	1187.2	0.4743	1.6027
150	358.43	0.01809	3.0139	330.6	1194.1	0.5141	1.5695
200	381.80	0.01839	2.2873	355.5	1198.3	0.5438	1.5454
250	400.97	0.01865	1.84317	376.1	1201.1	0.5679	1.5264
300	417.35	0.01889	1.54274	394.0	1202.9	0.5882	1.5105
350	431.73	0.01912	1.32554	409.8	1204.0	0.6059	1.4968
400	444.60	0.01934	1.16095	424.2	1204.6	0.6217	1.4847
450	456.28	0.01954	1.03179	437.3	1204.8	0.6360	1.4738
500	467.01	0.01975	0.92762	449.5	1204.7	0.6490	1.4639
600	486.20	0.02013	0.76975	471.7	1203.7	0.6723	1.4461
700	503.08	0.02050	0.65556	491.6	1201.8	0.6928	1.4304
800	518.21	0.02087	0.56896	509.8	1199.4	0.7111	1.4163
900	531.95	0.02123	0.50091	526.7	1196.4	0.7279	1.4032
1000	544.58	0.02159	0.44596	542.6	1192.9	0.7434	1.3910
1200	567.19	0.02232	0.36245	571.9	1184.8	0.7714	1.3683
1400	587.07	0.02307	0.30178	598.8	1175.8	0.7966	1.3474
1600	604.87	0.02387	0.25545	624.2	1164.5	0.8199	1.3274
1800	621.02	0.02472	0.21861	648.5	1152.3	0.8417	1.3079
2000	635.80	0.02565	0.18831	672.1	1138.3	0.8625	1.2881
2200	649.45	0.02669	0.16272	695.5	1122.2	0.8828	1.2676
2400	662.11	0.02790	0.14076	719.0	1103.7	0.9031	1.2460
2600	673.91	0.02938	0.12110	744.5	1082.0	0.9247	1.2225
2800	684.96	0.03134	0.10305	770.7	1055.5	0.9468	1.1958
3000	695.33	0.03428	0.08500	801.8	1020.3	0.9728	1.1619
3100	700.28	0.03681	0.07452	824.0	993.3	0.9914	1.1373
3200	705.08	0.04472	0.05663	875.5	931.6	1.0351	1.0832
3208.2	705.47	0.05078	0.05078	906.0	906.0	1.0612	1.0612

FIG. 24-38

Properties of Superheated Steam

Abs. Press., P, psia (Sat. Temp.)		Temperature, °F												
		200	300	400	500	600	700	800	900	1000	1100	1200	1400	1600
1 (101.74)	v . . .	392.6	452.3	512.0	571.6	631.2	690.8	750.4	809.9	869.5	929.1	988.7	1107.8	1227.0
	h . . .	1150.4	1195.8	1241.7	1288.3	1335.7	1383.8	1432.8	1482.7	1533.5	1585.2	1637.7	1745.7	1857.5
	s . . .	2.0512	2.1153	2.1720	2.2233	2.2702	2.3137	2.3542	2.3923	2.4283	2.4625	2.4952	2.5566	2.6137
5 (162.24)	v . . .	78.16	90.25	102.26	114.22	126.16	138.10	150.03	161.95	173.87	185.79	197.71	221.6	245.4
	h . . .	1148.8	1195.0	1241.2	1288.0	1335.4	1383.6	1432.7	1482.6	1533.4	1585.1	1637.7	1745.7	1857.4
	s . . .	1.8718	1.9370	1.9942	2.0456	2.0927	2.1361	2.1767	2.2148	2.2509	2.2851	2.3178	2.3792	2.4363
10 (193.21)	v . . .	38.85	45.00	51.04	57.05	63.03	69.01	74.98	80.95	86.92	92.88	98.84	110.77	122.69
	h . . .	1146.6	1193.9	1240.6	1287.5	1335.1	1383.4	1432.5	1482.4	1533.2	1585.0	1637.6	1745.6	1857.3
	s . . .	1.7927	1.8595	1.9172	1.9689	2.0160	2.0596	2.1002	2.1383	2.1744	2.2086	2.2413	2.3028	2.3598
14.696 (212.00)	v . . .	. . . .	30.53	34.68	38.78	42.86	46.94	51.00	55.07	59.13	63.19	67.25	75.37	83.48
	h . . .	. . . .	1192.8	1239.9	1287.1	1334.8	1383.2	1432.3	1482.3	1533.1	1584.8	1637.5	1745.5	1857.3
	s . . .	. . . .	1.8160	1.8743	1.9261	1.9734	2.0170	2.0576	2.0958	2.1319	2.1662	2.1989	2.2603	2.3174
20 (227.96)	v . . .	. . . .	22.36	25.43	28.46	31.47	34.47	37.46	40.45	43.44	46.42	49.41	55.37	61.34
	h . . .	. . . .	1191.6	1239.2	1286.6	1334.4	1382.9	1432.1	1482.1	1533.0	1584.7	1637.4	1745.4	1857.2
	s . . .	. . . .	1.7808	1.8396	1.8918	1.9392	1.9829	2.0235	2.0618	2.0978	2.1321	2.1648	2.2263	2.2834
40 (267.25)	v . . .	. . . .	11.040	12.628	14.168	15.688	17.198	18.702	20.20	21.70	23.20	24.69	27.68	30.66
	h . . .	. . . .	1186.8	1236.5	1284.8	1333.1	1381.9	1431.3	1481.4	1532.4	1584.3	1637.0	1745.1	1857.0
	s . . .	. . . .	1.6994	1.7608	1.8140	1.8619	1.9058	1.9467	1.9850	2.0212	2.0555	2.0883	2.1498	2.2069
60 (292.71)	v . . .	. . . .	7.259	8.357	9.403	10.427	11.441	12.449	13.452	14.454	15.453	16.451	18.446	20.44
	h . . .	. . . .	1181.6	1233.6	1283.0	1331.8	1380.9	1430.5	1480.8	1531.9	1583.8	1636.6	1744.8	1856.7
	s . . .	. . . .	1.6492	1.7135	1.7678	1.8162	1.8605	1.9015	1.9400	1.9762	2.0106	2.0434	2.1049	2.1621
80 (312.03)	v . . .	. . . .	. . . .	6.220	7.020	7.797	8.562	9.322	10.077	10.830	11.582	12.332	13.830	15.325
	h . . .	. . . .	. . . .	1230.7	1281.1	1330.5	1379.9	1429.7	1480.1	1531.3	1583.4	1636.2	1744.5	1856.5
	s . . .	. . . .	. . . .	1.6791	1.7346	1.7836	1.8281	1.8694	1.9079	1.9442	1.9787	2.0115	2.0731	2.1303
100 (327.81)	v . . .	. . . .	. . . .	4.937	5.589	6.218	6.835	7.446	8.052	8.656	9.259	9.860	11.060	12.258
	h . . .	. . . .	. . . .	1227.6	1279.1	1329.1	1378.9	1428.9	1479.5	1530.8	1582.9	1635.7	1744.2	1856.2
	s . . .	. . . .	. . . .	1.6518	1.7085	1.7581	1.8029	1.8443	1.8829	1.9193	1.9538	1.9867	2.0484	2.1056
120 (341.25)	v . . .	. . . .	. . . .	4.081	4.636	5.165	5.683	6.195	6.702	7.207	7.710	8.212	9.214	10.213
	h . . .	. . . .	. . . .	1224.4	1277.2	1327.7	1377.8	1428.1	1478.8	1530.2	1582.4	1635.3	1743.9	1856.0
	s . . .	. . . .	. . . .	1.6287	1.6869	1.7370	1.7822	1.8237	1.8625	1.8990	1.9335	1.9664	2.0281	2.0854
140 (353.02)	v . . .	. . . .	. . . .	3.468	3.954	4.413	4.861	5.301	5.738	6.172	6.604	7.035	7.895	8.752
	h . . .	. . . .	. . . .	1221.1	1275.2	1326.4	1376.8	1427.3	1478.2	1529.7	1581.9	1634.9	1743.5	1855.7
	s . . .	. . . .	. . . .	1.6087	1.6683	1.7190	1.7645	1.8063	1.8451	1.8817	1.9163	1.9493	2.0110	2.0683
160 (363.53)	v . . .	. . . .	. . . .	3.008	3.443	3.849	4.244	4.631	5.015	5.396	5.775	6.152	6.906	7.656
	h . . .	. . . .	. . . .	1217.6	1273.1	1325.0	1375.7	1426.4	1477.5	1529.1	1581.4	1634.5	1743.2	1855.5
	s . . .	. . . .	. . . .	1.5908	1.6519	1.7033	1.7491	1.7911	1.8301	1.8667	1.9014	1.9344	1.9962	2.0535
180 (373.06)	v . . .	. . . .	. . . .	2.649	3.044	3.411	3.764	4.110	4.452	4.792	5.129	5.466	6.136	6.804
	h . . .	. . . .	. . . .	1214.0	1271.0	1323.5	1374.7	1425.6	1476.8	1528.6	1581.0	1634.1	1742.9	1855.2
	s . . .	. . . .	. . . .	1.5745	1.6373	1.6894	1.7355	1.7776	1.8167	1.8534	1.8882	1.9212	1.9831	2.0404
200 (381.79)	v . . .	. . . .	. . . .	2.361	2.726	3.060	3.380	3.693	4.002	4.309	4.613	4.917	5.521	6.123
	h . . .	. . . .	. . . .	1210.3	1268.9	1322.1	1373.6	1424.8	1476.2	1528.0	1580.5	1633.7	1742.6	1855.0
	s . . .	. . . .	. . . .	1.5594	1.6240	1.6767	1.7232	1.7655	1.8048	1.8415	1.8763	1.9094	1.9713	2.0287
220 (389.86)	v . . .	. . . .	. . . .	2.125	2.465	2.772	3.066	3.352	3.634	3.913	4.191	4.467	5.017	5.565
	h . . .	. . . .	. . . .	1206.5	1266.7	1320.7	1372.6	1424.0	1475.5	1527.5	1580.0	1633.3	1742.3	1854.7
	s . . .	. . . .	. . . .	1.5453	1.6117	1.6652	1.7120	1.7545	1.7939	1.8308	1.8656	1.8987	1.9607	2.0181
240 (397.37)	v . . .	. . . .	. . . .	1.9276	2.247	2.533	2.804	3.068	3.327	3.584	3.839	4.093	4.597	5.100
	h . . .	. . . .	. . . .	1202.5	1264.5	1319.2	1371.5	1423.2	1474.8	1526.9	1579.6	1632.9	1742.0	1854.5
	s . . .	. . . .	. . . .	1.5319	1.6003	1.6546	1.7017	1.7444	1.7839	1.8209	1.8558	1.8889	1.9510	2.0084
260 (404.42)	v . . .	. . . .	. . . .	. . . .	2.063	2.330	2.582	2.827	3.067	3.305	3.541	3.776	4.242	4.707
	h . . .	. . . .	. . . .	. . . .	1262.3	1317.7	1370.4	1422.3	1474.2	1526.3	1579.1	1632.5	1741.7	1854.2
	s . . .	. . . .	. . . .	. . . .	1.5897	1.6447	1.6922	1.7352	1.7748	1.8118	1.8467	1.8799	1.9420	1.9995
280 (411.05)	v . . .	. . . .	. . . .	. . . .	1.9047	2.156	2.392	2.621	2.845	3.066	3.286	3.504	3.938	4.370
	h . . .	. . . .	. . . .	. . . .	1260.0	1316.2	1369.4	1421.5	1473.5	1525.8	1578.6	1632.1	1741.4	1854.0
	s . . .	. . . .	. . . .	. . . .	1.5796	1.6354	1.6834	1.7265	1.7662	1.8033	1.8383	1.8716	1.9337	1.9912
300 (417.33)	v . . .	. . . .	. . . .	. . . .	1.7675	2.005	2.227	2.442	2.652	2.859	3.065	3.269	3.674	4.078
	h . . .	. . . .	. . . .	. . . .	1257.6	1314.7	1368.3	1420.6	1472.8	1525.2	1578.1	1631.7	1741.0	1853.7
	s . . .	. . . .	. . . .	. . . .	1.5701	1.6268	1.6751	1.7184	1.7582	1.7954	1.8305	1.8638	1.9260	1.9835
350 (431.72)	v . . .	. . . .	. . . .	. . . .	1.4923	1.7036	1.8980	2.084	2.266	2.445	2.622	2.798	3.147	3.493
	h . . .	. . . .	. . . .	. . . .	1251.5	1310.9	1365.5	1418.5	1471.1	1523.8	1577.0	1630.7	1740.3	1853.1
	s . . .	. . . .	. . . .	. . . .	1.5481	1.6070	1.6563	1.7002	1.7403	1.7777	1.8130	1.8463	1.9086	1.9663
400 (444.59)	v . . .	. . . .	. . . .	. . . .	1.2851	1.4770	1.6508	1.8161	1.9767	2.134	2.290	2.445	2.751	3.055
	h . . .	. . . .	. . . .	. . . .	1245.1	1306.9	1362.7	1416.4	1469.4	1522.4	1575.8	1629.6	1739.5	1852.5
	s . . .	. . . .	. . . .	. . . .	1.5281	1.5894	1.6398	1.6842	1.7247	1.7623	1.7977	1.8311	1.8936	1.9513

FIG. 24-38 (Cont'd)

Properties of Superheated Steam

Abs. Press., P, psia (Sat. Temp.)		Temperature, °F													
		500	550	600	620	640	660	680	700	800	900	1000	1200	1400	1600
450 (456.28)	v . . .	1.1231	1.2155	1.3005	1.3332	1.3652	1.3967	1.4278	1.4584	1.6074	1.7516	1.8928	2.170	2.443	2.714
	h . . .	1238.4	1272.0	1302.8	1314.6	1326.2	1337.5	1348.8	1359.9	1414.3	1467.7	1521.0	1628.6	1738.7	1851.9
	s . . .	1.5095	1.5437	1.5735	1.5845	1.5951	1.6054	1.6153	1.6250	1.6699	1.7108	1.7486	1.8177	1.8803	1.9381
500 (467.01)	v . . .	0.9927	1.0800	1.1591	1.1893	1.2188	1.2478	1.2763	1.3044	1.4405	1.5715	1.6996	1.9504	2.197	2.442
	h . . .	1231.3	1266.8	1298.6	1310.7	1322.6	1334.2	1345.7	1357.0	1412.1	1466.0	1519.6	1627.6	1737.9	1851.3
	s . . .	1.4919	1.5280	1.5588	1.5701	1.5810	1.5915	1.6016	1.6115	1.6571	1.6982	1.7363	1.8056	1.8683	1.9262
550 (476.94)	v . . .	0.8852	0.9686	1.0431	1.0714	1.0989	1.1259	1.1523	1.1783	1.3038	1.4241	1.5414	1.7706	1.9957	2.219
	h . . .	1223.7	1261.2	1294.3	1306.8	1318.9	1330.8	1342.5	1354.0	1409.9	1464.3	1518.2	1626.6	1737.1	1850.6
	s . . .	1.4751	1.5131	1.5451	1.5568	1.5680	1.5787	1.5890	1.5991	1.6452	1.6868	1.7250	1.7946	1.8575	1.9155
600 (486.21)	v . . .	0.7947	0.8753	0.9463	0.9729	0.9988	1.0241	1.0489	1.0732	1.1899	1.3013	1.4096	1.6208	1.8279	2.033
	h . . .	1215.7	1255.5	1289.9	1302.7	1315.2	1327.4	1339.3	1351.1	1407.7	1462.5	1516.7	1625.5	1736.3	1850.0
	s . . .	1.4586	1.4990	1.5323	1.5443	1.5558	1.5667	1.5773	1.5875	1.6343	1.6762	1.7147	1.7846	1.8476	1.9056
700 (503.10)	v . . .	. . . .	0.7277	0.7934	0.8177	0.8411	0.8639	0.8860	0.9077	1.0108	1.1082	1.2024	1.3853	1.5641	1.7405
	h . . .	. . . .	1243.2	1280.6	1294.3	1307.5	1320.3	1332.8	1345.0	1403.2	1459.0	1513.9	1623.5	1734.8	1848.8
	s . . .	. . . .	1.4722	1.5084	1.5212	1.5333	1.5449	1.5559	1.5665	1.6147	1.6573	1.6963	1.7666	1.8299	1.8881
800 (518.23)	v . . .	. . . .	0.6154	0.6779	0.7006	0.7223	0.7433	0.7635	0.7833	0.8763	0.9633	1.0470	1.2088	1.3662	1.5214
	h . . .	. . . .	1229.8	1270.7	1285.4	1299.4	1312.9	1325.9	1338.6	1398.6	1455.4	1511.0	1621.4	1733.2	1847.5
	s . . .	. . . .	1.4467	1.4863	1.5000	1.5129	1.5250	1.5366	1.5476	1.5972	1.6407	1.6801	1.7510	1.8146	1.8729
900 (531.98)	v . . .	. . . .	0.5264	0.5873	0.6089	0.6294	0.6491	0.6680	0.6863	0.7716	0.8506	0.9262	1.0714	1.2124	1.3509
	h . . .	. . . .	1215.0	1260.1	1275.9	1290.9	1305.1	1318.8	1332.1	1393.9	1451.8	1508.1	1619.3	1731.6	1846.3
	s . . .	. . . .	1.4216	1.4653	1.4800	1.4938	1.5066	1.5187	1.5303	1.5814	1.6257	1.6656	1.7371	1.8009	1.8595
1000 (544.61)	v . . .	. . . .	0.4533	0.5140	0.5350	0.5546	0.5733	0.5912	0.6084	0.6878	0.7604	0.8294	0.9615	1.0893	1.2146
	h . . .	. . . .	1198.3	1248.8	1265.9	1281.9	1297.0	1311.4	1325.3	1389.2	1448.2	1505.1	1617.3	1730.0	1845.0
	s . . .	. . . .	1.3961	1.4450	1.4610	1.4757	1.4893	1.5021	1.5141	1.5670	1.6121	1.6525	1.7245	1.7886	1.8474
1100 (556.31)	v . . .	. . . .	. . . .	0.4532	0.4738	0.4929	0.5110	0.5281	0.5445	0.6191	0.6866	0.7503	0.8716	0.9885	1.1031
	h . . .	. . . .	. . . .	1236.7	1255.3	1272.4	1288.5	1303.7	1318.3	1384.3	1444.5	1502.2	1615.2	1728.4	1843.8
	s . . .	. . . .	. . . .	1.4251	1.4425	1.4583	1.4728	1.4862	1.4989	1.5535	1.5995	1.6405	1.7130	1.7775	1.8363
1200 (567.22)	v . . .	. . . .	. . . .	0.4016	0.4222	0.4410	0.4586	0.4752	0.4909	0.5617	0.6250	0.6843	0.7967	0.9046	1.0101
	h . . .	. . . .	. . . .	1223.5	1243.9	1262.4	1279.6	1295.7	1311.0	1379.3	1440.7	1499.2	1613.1	1726.9	1842.5
	s . . .	. . . .	. . . .	1.4052	1.4243	1.4413	1.4568	1.4710	1.4843	1.5409	1.5879	1.6293	1.7025	1.7672	1.8263
1400 (587.10)	v . . .	. . . .	. . . .	0.3174	0.3390	0.3580	0.3753	0.3912	0.4062	0.4714	0.5281	0.5805	0.6789	0.7727	0.8640
	h . . .	. . . .	. . . .	1193.0	1218.4	1240.4	1260.3	1278.5	1295.5	1369.1	1433.1	1493.2	1608.9	1723.7	1840.0
	s . . .	. . . .	. . . .	1.3639	1.3877	1.4079	1.4258	1.4419	1.4567	1.5177	1.5666	1.6093	1.6836	1.7489	1.8083
1600 (604.90)	v . . .	. . . .	. . . .	. . . .	0.2733	0.2936	0.3112	0.3271	0.3417	0.4034	0.4553	0.5027	0.5906	0.6738	0.7545
	h . . .	. . . .	. . . .	. . . .	1187.8	1215.2	1238.7	1259.6	1278.7	1358.4	1425.3	1487.0	1604.6	1720.5	1837.5
	s . . .	. . . .	. . . .	. . . .	1.3489	1.3741	1.3952	1.4137	1.4303	1.4964	1.5476	1.5914	1.6669	1.7328	1.7926
1800 (621.03)	v . . .	. . . .	. . . .	. . . .	. . . .	0.2407	0.2597	0.2760	0.2907	0.3502	0.3986	0.4421	0.5218	0.5968	0.6693
	h . . .	. . . .	. . . .	. . . .	. . . .	1185.1	1214.0	1238.5	1260.3	1347.2	1417.4	1480.8	1600.4	1717.3	1835.0
	s . . .	. . . .	. . . .	. . . .	. . . .	1.3377	1.3638	1.3855	1.4044	1.4765	1.5301	1.5752	1.6520	1.7185	1.7786
2000 (635.82)	v . . .	. . . .	. . . .	. . . .	. . . .	0.1936	0.2161	0.2337	0.2489	0.3074	0.3532	0.3935	0.4668	0.5352	0.6011
	h . . .	. . . .	. . . .	. . . .	. . . .	1145.6	1184.9	1214.8	1240.0	1335.5	1409.2	1474.5	1596.1	1714.1	1832.5
	s . . .	. . . .	. . . .	. . . .	. . . .	1.2945	1.3300	1.3564	1.3783	1.4576	1.5139	1.5603	1.6384	1.7055	1.7660
2500 (668.13)	v . . .	. . . .	. . . .	. . . .	. . . .	. . . .	. . . .	0.1484	0.1686	0.2294	0.2710	0.3061	0.3678	0.4244	0.4784
	h . . .	. . . .	. . . .	. . . .	. . . .	. . . .	. . . .	1132.3	1176.8	1303.6	1387.8	1458.4	1585.3	1706.1	1826.2
	s . . .	. . . .	. . . .	. . . .	. . . .	. . . .	. . . .	1.2687	1.3073	1.4127	1.4772	1.5273	1.6088	1.6775	1.7389
3000 (695.36)	v . . .	. . . .	. . . .	. . . .	. . . .	. . . .	. . . .	. . . .	0.0984	0.1760	0.2159	0.2476	0.3018	0.3505	0.3966
	h . . .	. . . .	. . . .	. . . .	. . . .	. . . .	. . . .	. . . .	1060.7	1267.2	1365.0	1441.8	1574.3	1698.0	1819.9
	s . . .	. . . .	. . . .	. . . .	. . . .	. . . .	. . . .	. . . .	1.1966	1.3690	1.4439	1.4984	1.5837	1.6540	1.7163
3206.2 (705.40)	v . . .	. . . .	. . . .	. . . .	. . . .	. . . .	. . . .	. . . .	. . . .	0.1583	0.1981	0.2288	0.2806	0.3267	0.3703
	h . . .	. . . .	. . . .	. . . .	. . . .	. . . .	. . . .	. . . .	. . . .	1250.5	1355.2	1434.7	1569.8	1694.6	1817.2
	s . . .	. . . .	. . . .	. . . .	. . . .	. . . .	. . . .	. . . .	. . . .	1.3508	1.4309	1.4874	1.5742	1.6452	1.7080
3500	v . . .	. . . .	. . . .	. . . .	. . . .	. . . .	. . . .	. . . .	0.0306	0.1364	0.1762	0.2058	0.2546	0.2977	0.3381
	h . . .	. . . .	. . . .	. . . .	. . . .	. . . .	. . . .	. . . .	780.5	1224.9	1340.7	1424.5	1563.3	1689.8	1813.6
	s . . .	. . . .	. . . .	. . . .	. . . .	. . . .	. . . .	. . . .	0.9515	1.3241	1.4127	1.4723	1.5615	1.6336	1.6968
4000	v . . .	. . . .	. . . .	. . . .	. . . .	. . . .	. . . .	. . . .	0.0287	0.1052	0.1462	0.1743	0.2192	0.2581	0.2943
	h . . .	. . . .	. . . .	. . . .	. . . .	. . . .	. . . .	. . . .	763.8	1174.8	1314.4	1406.8	1552.1	1681.7	1807.2
	s . . .	. . . .	. . . .	. . . .	. . . .	. . . .	. . . .	. . . .	0.9347	1.2757	1.3827	1.4482	1.5417	1.6154	1.6795
4500	v . . .	. . . .	. . . .	. . . .	. . . .	. . . .	. . . .	. . . .	0.0276	0.0798	0.1226	0.1500	0.1917	0.2273	0.2602
	h . . .	. . . .	. . . .	. . . .	. . . .	. . . .	. . . .	. . . .	753.5	1113.9	1286.5	1388.4	1540.8	1673.5	1800.9
	s . . .	. . . .	. . . .	. . . .	. . . .	. . . .	. . . .	. . . .	0.9235	1.2204	1.3529	1.4253	1.5235	1.5990	1.6640
5000	v . . .	. . . .	. . . .	. . . .	. . . .	. . . .	. . . .	. . . .	0.0268	0.0593	0.1036	0.1303	0.1696	0.2027	0.2329
	h . . .	. . . .	. . . .	. . . .	. . . .	. . . .	. . . .	. . . .	746.4	1047.1	1256.5	1369.5	1529.5	1665.3	1794.5
	s . . .	. . . .	. . . .	. . . .	. . . .	. . . .	. . . .	. . . .	0.9152	1.1622	1.3231	1.4034	1.5066	1.5839	1.6499
5500	v . . .	. . . .	. . . .	. . . .	. . . .	. . . .	. . . .	. . . .	0.0262	0.0463	0.0880	0.1143	0.1516	0.1825	0.2106
	h . . .	. . . .	. . . .	. . . .	. . . .	. . . .	. . . .	. . . .	741.3	985.0	1224.1	1349.3	1518.2	1657.0	1788.1
	s . . .	. . . .	. . . .	. . . .	. . . .	. . . .	. . . .	. . . .	0.9090	1.1093	1.2930	1.3821	1.4908	1.5699	1.6369

NOTES:

SECTION 25

Equilibrium Ratio (K) Data

The equilibrium ratio (K_i) of a component i in a multicomponent mixture of liquid and vapor phases is defined as the ratio of the mole fraction of that component in the vapor phase to that in the liquid phase.

$$K_i = \frac{y_i}{x_i} \qquad \textbf{Eq 25-1}$$

For an ideal system (ideal gas and ideal solution), this equilibrium ratio is reduced to the ratio of the vapor pressure of component i to the total pressure of the system.

$$K_i = \frac{P_i^*}{P} \qquad \textbf{Eq 25-2}$$

This section presents an outline procedure to calculate the liquid and vapor compositions of a two-phase mixture in equilibrium using the concept of a pseudobinary system and the convergence pressure equilibrium charts. Discussion of CO_2 separation, alternate methods to obtain K values, and equations of state follow.

K-DATA CHARTS

These charts show the vapor-liquid equilibrium ratio, K_i, for use in example and approximate flash calculations. The charts will not give accurate answers, particularly in the case of nitrogen. They are included only to support example flash calculations and to support quick estimation of K-values in other hand calculations.

Previous editions of this data book presented extensive sets of K-data based on the GPA Convergence Pressure, P_k, method. A component's K-data is a strong function of temperature and pressure and a weaker function of composition. The convergence pressure method recognizes composition effects in predicting K-data. The convergence pressure technique can be used in hand calculations, and it is still available as computer correlations for K-data prediction.

There is now general availability of computers. This availability coupled with the more refined K-value correlations in modern process simulators has rendered the previous GPA convergence pressure charts outdated. Complete sets of these charts are available from GPA as a Technical Paper, TP-22.

Data for N_2-CH_4 and N_2-C_2H_6 show that the K-values in this system have strong compositional dependence. The component volatility sequence is N_2-CH_4-C_2H_6 and the K-values are functions of the amount of methane in the liquid phase. For example, at –190°F and 300 psia, the K-values depending on composition vary from:

N_2	CH_4	C_2H_6
10.2	0.824*	0.0118
3.05	0.635	0.035*

where * indicates the limiting infinite dilution K-value. See reference 5 for the data on this ternary.

The charts retained in this edition represent roughly 12% of the charts included in previous editions. These charts are a compromise set for gas processing as follows:

a. hydrocarbons — 3000 psia P_k
b. nitrogen — 2000 psia P_k
c. hydrogen sulfide — 3000 psia P_k

The pressures in a. through c. above refer to convergence pressure, P_k, of the charts from the Tenth Edition of this data book. They should not be used for design work or related activities. Again, their retention in this edition is for illustration and approximation purposes only; however, they can be very useful in such a role. The critical locus chart used in the convergence pressure method has also been retained (Fig. 25-8).

The GPA/GPSA sponsors investigations in hydrocarbon systems of interest to gas processors. Detailed results are given in the annual proceedings and in various research reports and technical publications, which are listed in Section 1.

Example 25-1 — Binary System Calculation

To illustrate the use of binary system K-value charts, assume a mixture of 60 lb moles of methane and 40 lb moles of ethane at –125°F and 50 psia. From the chart on page 25-10, the K-values for methane and ethane are 10 and 0.35 respectively.

Solution Steps

FIG. 25-1

Nomenclature

K_i = equilibrium ratio, $\frac{y_i}{x_i}$
L = ratio of moles of liquid to moles of total mixture
N = mole fraction in the total mixture or system
ω = acentric factor
P = absolute pressure, psia
P_k = convergence pressure, psia
P^* = vapor pressure, psia
R = universal gas constant, (psia • cu ft) / (lbmole • °R)
T = temperature, °R or °F
V = ratio of moles of vapor to moles of total mixture
x_i = mole fraction of component i in the liquid phase
y_i = mole fraction of component i in the vapor phase

Subscripts

i = component

From the definition of K-value, Eq 25-1:

$$K_{C1} = \frac{y_{C1}}{x_{C1}} = 10$$

$$K_{C2} = \frac{y_{C2}}{x_{C2}} = 0.35$$

Rewriting for this binary mixture:

$$\frac{1 - y_{C1}}{1 - x_{C1}} = 0.35$$

Solving the above equations simultaneously:

$$x_{C1} = 0.0674$$

$$y_{C1} = 0.674$$

Also by solving in the same way:

$$x_{C2} = 0.9326$$

$$y_{C2} = 0.326$$

To find the amount of vapor in the mixture, let v denote lb moles of vapor. Summing the moles of methane in each phase gives:

$$\Sigma \text{ kmols } C_1 + C_2 = 100 \text{ kmols}$$

$$\underset{\text{in vapor}}{\text{kmols } C_1} + \underset{\text{in liquid}}{\text{kmols } C_1} = 60 \text{ kmols}$$

$$(y_{C1} \times v) + (x_{c_1}[100 - v]) = 60 \text{ kmols}$$

$$(0.674 \times v) + (0.0674\,[100 - v]) = 60 \text{ kmols}$$

$$v = 87.8$$

The mixture consists of 87.8 kmols of vapor and 12.2 kmols of liquid.

FLASH CALCULATION PROBLEM

To illustrate the calculation of multicomponent vapor-liquid equilibrium using the flash equations and the K-charts, a problem is worked out in detail below.

The variables are defined in Fig. 25-1. Note that the K-value is implied to be at thermodynamic equilibrium.

A situation of reproducible steady state conditions in a piece of equipment does not necessarily imply that classical thermodynamic equilibrium exists. If the steady composition differs from that for equilibrium, the reason can be the result of time-limited mass transfer and diffusion rates. This warning is made because it is not at all unusual for flow rates through equipment to be so high that equilibrium is not attained or even closely approached. In such cases, equilibrium flash calculations as described here fail to predict conditions in the system accurately, and the K-values are suspected for this failure—when in fact they are not at fault.

Using the relationships

$$K_i = y_i/x_i \qquad \textbf{Eq 25-3}$$

$$L + V = 1.0 \qquad \textbf{Eq 25-4}$$

By writing a material balance for each component in the liquid, vapor, and total mixture, one may derive the flash equation in various forms. A common one is,

$$\Sigma x_i = \Sigma \frac{N_i}{L + VK_i} = 1.0 \qquad \textbf{Eq 25-5}$$

Other useful versions may be written as

$$L = \Sigma \frac{N_i}{1 + (V/L)\,K_i} \qquad \textbf{Eq 25-6}$$

$$\Sigma y_i = \frac{K_i N_i}{L + VK_i} \qquad \textbf{Eq 25-7}$$

At the phase boundary conditions of bubble point (L = 1.00) and dew point (V = 1.00), these equations reduce to

$$\Sigma\, K_i\, N_i = 1.0 \text{ (bubble point)} \qquad \textbf{Eq 25-8}$$

and

$$\Sigma\, N_i/K_i = 1.0 \text{ (dew point)} \qquad \textbf{Eq 25-9}$$

These are often helpful for preliminary calculations where the phase condition of a system at a given pressure and temperature is in doubt. If $\Sigma K_i N_i$ and $\Sigma N_i/K_i$ are both greater than 1.0, the system is in the two phase region. If $\Sigma K_i N_i$ is less than 1.0, the system is all liquid. If $\Sigma N_i/K_i$ is less than 1.0, the system is all vapor.

Example 25-2 — A typical high pressure separator gas is used for feed to a natural gas liquefaction plant, and a preliminary step in the process involves cooling to –20°F at 600 psia to liquefy heavier hydrocarbons prior to cooling to lower temperatures where these components would freeze out as solids.

Solution Steps

The feed gas composition is shown in Fig. 25-3. The flash equation 25-5 is solved for three estimated values of L as shown in columns 3, 4, and 5. By plotting estimated L versus calculated Σx_i, the correct value of L where $\Sigma x_i = 1.00$ is L = 0.030, whose solution is shown in columns 6 and 7. The gas composition is then calculated using $y_i = K_i x_i$ in column 8. This "correct" value is used for purposes of illustration. It is not a completely converged solution, for $x_i = 1.00049$ and $y_i = 0.99998$, columns 7 and 8 of Fig. 25-3. This error may be too large for some applications.

Example 25-3 — Dew Point Calculation

A gas stream at 100°F and 800 psia is being cooled in a heat exchanger. Find the temperature at which the gas starts to condense.

Solution Steps

The approach to find the dew point of the gas stream is similar to the previous example. The equation for dew point condition ($\Sigma N_i/K_i = 1.0$) is solved for two estimated dew point temperatures as shown in Fig. 25-4. By interpolation, the temperature at which $\Sigma N_i/K_i = 1.0$ is estimated at –41.6°F.

Note that the heaviest component is quite important in dew point calculations. For more complex mixtures, the characterization of the heavy fraction as a pseudocomponent such as hexane or octane will have a significant effect on dew point calculations.

Carbon Dioxide

Early conflicting data on CO_2 systems was used to prepare K-data (P_k = 4000) charts for the 1966 Edition. Later, experience showed that at low concentrations of CO_2, the rule of thumb

$$K_{CO_2} = \sqrt{K_{C_1} \cdot K_{C_2}} \qquad \textbf{Eq 25-10}$$

could be used with a plus or minus 10% accuracy. Developments in the use of CO_2 for reservoir drive have led to exten-

FIG. 25-2

Sources of K-Value Charts

Component	Charts available from sources as indicated							
	Binary Data	Convergence pressures, psia						
		800	1000	1500	2000	3000	5000	10,000
Nitrogen	*	□	□		□			
Methane	*	∇	∇	∇	∇	∇	∇	
Ethylene		□	□		□			
Ethane	*	∇	∇	∇	∇	∇	×	×
Propylene		□	□		□			
Propane	*	∇	∇	∇	∇	∇	××	
iso-Butane		□	□	×	×	×	×	×
n-Butane	*†	□	□	×	×	×	×	×
iso-Pentane		□	□	×	×	×	×	×
n-Pentane	*†	□	□	×	×	×	×	×
Hexane	*†	□	□	×	×	×	×	×
Heptane	*†			×	×	×	×	×
Octane		□	□	×	×	×	×	×
Nonane				×	×	×	×	×
Decane		□	□	×	×	×	×	×
Hydrogen sulfide			×			×		
Carbon dioxide	** Use $K_{CO_2} = \sqrt{K_{C_1} \cdot K_{C_2}}$							

* Binary data from Price & Kobayashi; Wichterle & Kobayashi; Stryjek, Chappelear, & Kobayashi; and Chen & Kobayashi
∇ Drawn for 1972 Edition based on available data
□ Reused from 1966 Edition
× Reused from 1957 Edition
† Prepared for Second Revisions 1972 Edition or revised
** Limited to CO_2 concentration of 10 mole percent of feed or less

Note: The charts shown in bold outline are published in this edition of the data book. The charts shown in the shaded area are published in a separate GPA Technical Publication (TP-22) as well as the 10th Edition.

sive investigations in CO_2 processing. See the GPA research reports (listed in Section 1) and the Proceedings of GPA conventions. The reverse volatility at high concentration of propane and/or butane has been used effectively in extractive distillation to effect CO_2 separation from methane and ethane.[23] In general, CO_2 lies between methane and ethane in relative volatility.

Separation of CO_2 and Methane

The relative volatility of CO_2 and methane at typical operating pressures is quite high, usually about 5 to 1. From this standpoint, this separation should be quite easy. However, at processing conditions, the CO_2 will form a solid phase if the distillation is carried to the point of producing high purity methane.

Fig. 25-5 depicts the phase diagram for the methane-CO_2 binary system.[21] The pure component lines for methane and CO_2 vapor-liquid equilibrium form the left and right boundaries of the phase envelope. Each curve terminates at its critical point; methane at –116.7°F, 668 psia and CO_2 at 88°F, 1071 psia. The unshaded area is the vapor-liquid region. The shaded area represents the vapor-CO_2 solid region which extends to a pressure of 705 psia.

Because the solid region extends to a pressure above the methane critical pressure, it is not possible to fractionate pure methane from a CO_2-methane system without entering the solid formation region. It is possible to perform a limited separation of CO_2 and methane if the desired methane can contain significant quantities of CO_2.

At an operating pressure above 705 psia, the methane purity is limited by the CO_2-methane critical locus (Fig. 25-6). For example, operating at 715 psia, it is theoretically possible to avoid solid CO_2 formation (Fig. 25-7 and 16-33). The limit on methane purity is fixed by the approach to the mixture critical. In this case, the critical binary contains 6% CO_2. A practical operating limit might be 10-15% CO_2.

One approach to solving the methane-CO_2 distillation problem is by using extractive distillation (See Section 16, Hydrocarbon Recovery). The concept is to add a heavier hydrocarbon stream to the condenser in a fractionation column. Around 10 GPA research reports present data on various CO_2 systems which are pertinent to the design of such a process.

CO_2-Ethane Separation

The separation of CO_2 and ethane by distillation is limited by the azeotrope formation between these components. An azeotropic composition of approximately 67% CO_2, 33% ethane is formed at virtually any pressure.[24]

Fig. 25-7 shows the CO_2-ethane system at two different pressures. The binary is a minimum boiling azeotrope at both pressures with a composition of about two-thirds CO_2 and

FIG. 25-3

Flash Calculation at 600 psia and –20°F

Component	Column							
	1	2	3	4	5	6	7	8
	Feed Gas Composition	Pk = 2000	Trial values of L			Final L = 0.030		
			L = 0.020	L = 0.060	L = 0.040	L + VKi	Liquid	Vapor
	N_i	K_i	$\frac{N_i}{L+VK_i}$	$\frac{N_i}{L+VK_i}$	$\frac{N_i}{L+VK_i}$		$x_i = \frac{N_i}{L+VK_i}$	y_i
C_1	0.9010	3.7	0.24712	0.25466	0.25084	3.61900	0.24896	0.92117
CO_2**	0.0106	1.23	0.00865	0.00872	0.00868	1.22310	0.00867	0.01066
C_2	0.0499	0.41	0.11830	0.11203	0.11508	0.42770	0.11667	0.04783
C_3	0.0187	0.082	0.18633	0.13642	0.15751	0.10954	0.17071	0.01400
iC_4	0.0065	0.034	0.12191	0.07068	0.08948	0.06298	0.10321	0.00351
nC_4	0.0045	0.023	0.10578	0.05513	0.07249	0.05231	0.08603	0.00198
iC_5	0.0017	0.0085	0.06001	0.02500	0.03530	0.03825	0.04445	0.00038
nC_5	0.0019	0.0058	0.07398	0.02903	0.04170	0.03563	0.05333	0.00031
C_6	0.0029	0.0014	0.13569	0.04730	0.07014	0.03136	0.09248	0.00013
C_7+*	0.0023	0.00028	0.11334	0.03817	0.05712	0.03027	0.07598	0.00002
TOTALS	1.0000		1.17121	0.77714	0.89834		1.00049	0.99998
C_7		0.00042						
C_8		0.00014						

* Average of nC_7 + nC_8 properties

** $\sqrt{K_{C_1} \cdot K_{C_2}}$

FIG. 25-4

Dew Point Calculation at 800 psia

Component	Column				
	1	2	3	4	5
	Feed	Pk = 1000, T = -50°F		Pk = 1000, T = -40°F	
	N_i	K_i	$\frac{N_i}{K_i}$	K_i	$\frac{N_i}{K_i}$
CH_4	0.854	2.25	0.313	2.30	0.311
CO_2	0.051	0.787	0.059	0.844	0.056
C_2H_6	0.063	0.275	0.229	0.31	0.210
C_3H_8	0.032	0.092	0.457	0.105	0.400
Σ =	1.000		1.058		0.977

K_{CO_2} calculated as $\sqrt{K_{C_1} \cdot K_{C_2}}$

$$\text{Linear interpolation: } T_{dew} = -40 - [-40 - (-50)]\left(\frac{1.000 - 0.977}{1.058 - 0.977}\right) = -42.8°F$$

one-third ethane. Thus, an attempt to separate CO_2 and ethane to nearly pure components by distillation cannot be achieved by traditional methods, and extractive distillation is required[26] (See Section 16, Hydrocarbon Recovery).

Separation of CO_2 and H_2S

The distillative separation of CO_2 and H_2S can be performed with traditional methods. The relative volatility of CO_2 to H_2S is quite small. While an azeotrope between H_2S and CO_2 does not exist, vapor-liquid equilibrium behavior for this binary approaches azeotropic character at high CO_2 concentrations[25] (See Section 16, Hydrocarbon Recovery).

K-VALUE CORRELATIONS

Numerous procedures have been devised to predict K-values. These include equations of state (EOS), combinations of equations of state with liquid theory or with tabular data, and corresponding states correlations. This section describes sev-

FIG. 25-5

Phase Diagram CH_4-CO_2 Binary[21]

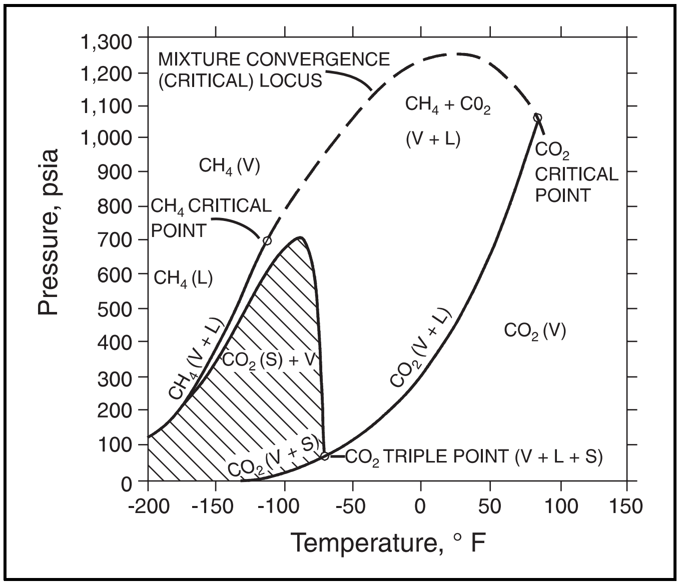

eral of the more popular procedures currently available. It does not purport to be all-inclusive or comparative.

Equations of state have appeal for predicting thermodynamic properties because they provide internally consistent values for all properties in convenient analytical form. Two popular state equations for K-value predictions are the Benedict-Webb-Rubin (BWR) equation and the Redlich-Kwong equation.

The original BWR equation[17] uses eight parameters for each component in a mixture plus a tabular temperature dependence for one of the parameters to improve the fit of vapor-pressure data. This original equation is reasonably accurate for light paraffin mixtures at reduced temperatures of 0.6 and above.[8] The equation has difficulty with low temperatures, non-hydrocarbons, non-paraffins, and heavy paraffins.

Improvements to the BWR include additional terms for temperature dependence, parameters for additional compounds, and generalized forms of the parameters.

Starling[20] has included explicit parameter temperature dependence in a modified BWR equation which is capable of predicting light paraffin K-values at cryogenic temperatures.

FIG. 25-6

Isothermal Dew Point and Frost Point Data for Methane-Carbon Dioxide[32]

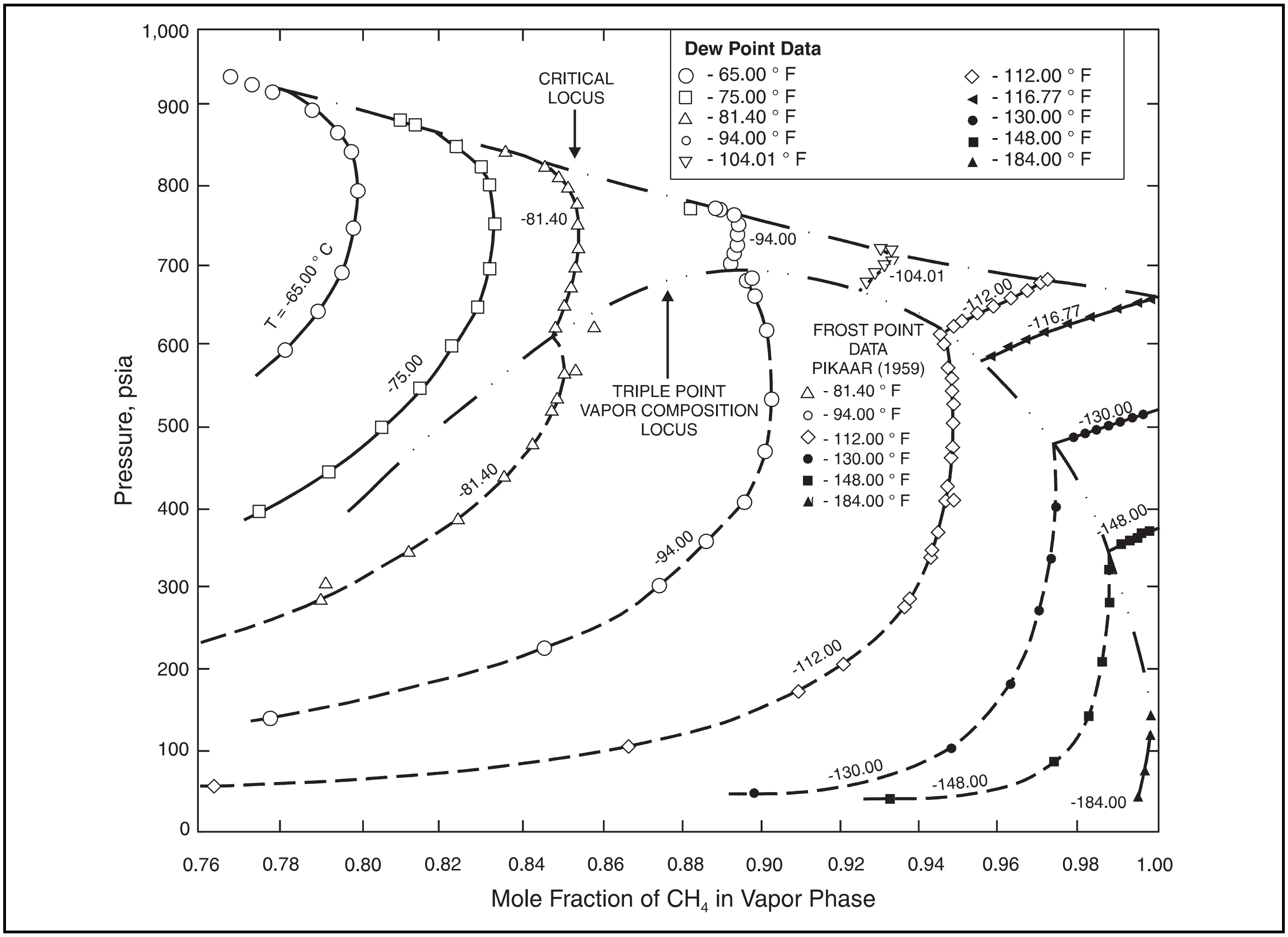

FIG. 25-7

Vapor-Liquid Equilibria CO_2-C_2H_6[21]

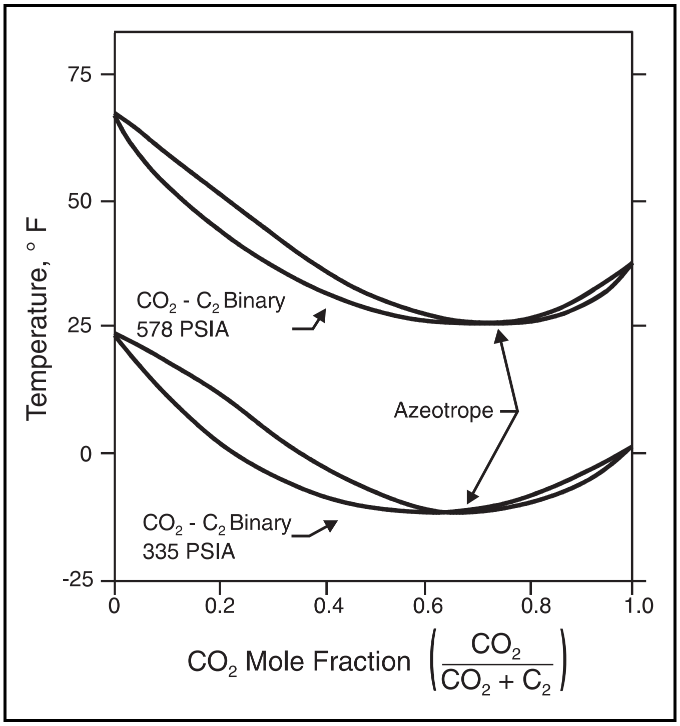

The Redlich-Kwong equation has the advantage of a simple analytical form which permits direct solution for density at specified pressure and temperature. The equation uses two parameters for each mixture component, which in principle permits parameter values to be determined from critical properties.

However, as with the BWR equation, the Redlich-Kwong equation has been made useful for K-value predictions by empirical variation of the parameters with temperature and with acentric factor[11, 18, 19] and by modification of the parameter-combination rules.[15, 19] Considering the simplicity of the Redlich-Kwong equation form, the various modified versions predict K-values remarkably well.

Interaction parameters for non-hydrocarbons with hydrocarbon components are necessary in the Redlich-Kwong equation to predict the K-values accurately when high concentrations of non-hydrocarbon components are present. They are especially important in CO_2 fractionation processes, and in conventional fractionation plants to predict sulfur compound distribution.

The Chao-Seader correlation[7] uses the Redlich-Kwong equation for the vapor phase, the regular solution model for liquid-mixture non-ideality, and a pure-liquid property correlation for effects of component identity, pressure, and temperature in the liquid phase. The correlation has been applied to a broad spectrum of compositions at temperatures from –50°F to 300°F and pressures to 2000 psia. The original (P,T) limitations have been reviewed.[12]

Prausnitz and Chueh have developed[16] a procedure for high-pressure systems employing a modified Redlich-Kwong equation for the vapor phase and for liquid-phase compressibility together with a modified Wohl-equation model for liquid phase activity coefficients. Complete computer program listings are given in their book. Parameters are given for most natural gas components. Adler et al. also use the Redlich-Kwong equation for the vapor and the Wohl equation form for the liquid phase.[6]

The corresponding states principle[10] is used in all the procedures discussed above. The principle assumes that the behavior of all substances follows the same equation forms and equation parameters are correlated versus reduced critical properties and acentric factor. An alternate corresponding states approach is to refer the behavior of all substances to the properties of a reference substance, these properties being given by tabular data or a highly accurate state equation developed specifically for the reference substance.

The deviations of other substances from the simple critical-parameter-ratio correspondence to the reference substance are then correlated. Mixture rules and combination rules, as usual, extend the procedure to mixture calculations. Leland and co-workers have developed[9] this approach extensively for hydrocarbon mixtures.

"Shape factors" are used to account for departure from simple corresponding states relationships, with the usual reference substance being methane. The shape factors are developed from PVT and fugacity data for pure components. The procedure has been tested over a reduced temperature range of 0.4 to 3.3 and for pressures to 4000 psia. Sixty-two components have been correlated including olefinic, naphthenic, and aromatic hydrocarbons.

The Soave Redlich-Kwong (SRK)[13] is a modified version of the Redlich-Kwong equation. One of the parameters in the original Redlich-Kwong equation, a, is modified to a more temperature dependent term. It is expressed as a function of the acentric factor. The SRK correlation has improved accuracy in predicting the saturation conditions of both pure substances and mixtures. It can also predict phase behavior in the critical region, although at times the calculations become unstable around the critical point. Less accuracy has been obtained when applying the correlation to hydrogen-containing mixtures.

Peng and Robinson[14] similarly developed a two-constant Redlich-Kwong equation of state in 1976. In this correlation, the attractive pressure term of the semi-empirical van der Waals equation has been modified. It accurately predicts the vapor pressures of pure substances and equilibrium ratios of mixtures. In addition to offering the same simplicity as the SRK equation, the Peng-Robinson equation is more accurate in predicting the liquid density.

In applying any of the above correlations, the original critical/physical properties used in the derivation must be inserted into the appropriate equations. One may obtain slightly different solutions from different computer programs, even for the same correlation. This can be attributed to different iteration techniques, convergence criteria, initial estimation values, etc. Determination and selection of interaction parameters and selection of a particular equation of state must be done carefully, considering the system components, the operating conditions, etc.

EQUATIONS OF STATE

Refer to original papers for mixing rules for multicomponent mixtures.

van der Waals [30]

$$Z^3 - (1 + B)\,Z^2 + AZ - AB = 0$$

$$A = \frac{aP}{R^2\,T^2}$$

$$B = \frac{bP}{RT}$$

$$a = \frac{27\,R^2\,T_c^2}{64\,P_c}$$

$$b = \frac{R\,T_c}{8\,P_c}$$

Redlich-Kwong [28]

$$Z^3 - Z^2 + (A - B - B^2)\,Z - AB = 0$$

$$A = \frac{aP}{R^2\,T^{2.5}}$$

$$B = \frac{b\,P}{R\,T}$$

$$a = 0.42747\left(\frac{R^2\,T_c^{2.5}}{P_c}\right)$$

$$b = 0.0867\left(\frac{R\,T_c}{P_c}\right)$$

Soave Redlich-Kwong (SRK) [13]

$$Z^3 - Z^2 + (A - B - B^2)\,Z - AB = 0$$

$$A = \frac{a\,P}{R^2\,T^2}$$

$$B = \frac{b\,P}{R\,T}$$

$$a = a_c\,\alpha$$

$$a_c = 0.42747\left(\frac{R^2\,T_c^2}{P_c}\right)$$

$$\alpha^{1/2} = 1 + m\,(1 - T_r^{1/2})$$

$$m = 0.48 + 1.574\,\omega - 0.176\,\omega^2$$

$$b = 0.08664\left(\frac{R\,T_c}{P_c}\right)$$

Peng Robinson [31]

$$Z^3 - (1 - B)\,Z^2 + (A - 3B^2 - 2B)\,Z - (AB - B^2 - B^3) = 0$$

$$A = \frac{a\,P}{R^2\,T^2}$$

$$B = \frac{bP}{RT}$$

$$a = 0.45724\left(\frac{R^2\,T_c^2}{P_c}\right)\alpha$$

$$\alpha^{1/2} = 1 + m\,(1 - T_r^{1/2})$$

$$m = 0.37464 + 1.54226\,\omega - 0.26992\,\omega^2$$

$$b = 0.0778\left(\frac{R\,T_c}{P_c}\right)$$

Benedict-Webb-Rubin-Starling (BWRS) [20, 29]

$$P = \frac{R\,T}{V} + \left(B_o\,R\,T - A_o - \frac{C_o}{T^2} + \frac{D_o}{T^3} - \frac{E_o}{T^4}\right)\frac{1}{V^2} + \left(bRT - a - \frac{d}{T}\right)\frac{1}{V^3} + \alpha\left(a + \frac{d}{T}\right)\frac{1}{V^6} + \frac{c}{V^3}\left(\frac{1}{T^2}\right)\left(1 + \frac{\gamma}{V^2}\right)^{-\gamma/V^2}$$

Note: ω, the acentric factor is defined in Section 23, p. 23-30

REFERENCES AND BIBLIOGRAPHY

1. Wilson, G. M., Barton, S. T., NGPA Report RR-2: "K-Values in Highly Aromatic and Highly Naphthenic Real Oil Absorber Systems," (1971).
2. Poettman, F. H., and Mayland, B. J., "Equilibrium Constants for High-Boiling Hydrocarbon Fractions of Varying Characterization Factors," Petroleum Refiner 28, 101-102, July, 1949.
3. White, R. R., and Brown, G. G., "Phase Equilibria of Complex Hydrocarbon Systems at Elevated Temperatures and Pressures," Ind. Eng. Chem. 37, 1162 (1942).
4. Grayson, H. G., and Streed, C. W., "Vapor-Liquid Equilibria for High Temperature, High Pressure Hydrogen-Hydrocarbon Systems," Proc. 6th World Petroleum Cong., Frankfort Main, III, Paper 20-DP7, p. 223 (1963).
5. Chappelear, Patsy, GPA Technical Publication TP-4, "Low Temperature Data from Rice University for Vapor-Liquid and P-V-T Behavior," April (1974).
6. Adler, S. B., Ozkardesh, H., Schreiner, W. C., Hydrocarbon Proc., 47 (4) 145 (1968).
7. Chao, K. C., Seader, J. D., AIChEJ, 7, 598 (1961).
8. Barner, H. E., Schreiner, W. C., Hydrocarbon Proc., 45 (6) 161 (1966).
9. Leach, J. W., Chappelear, P. S., and Leland, T. W., "Use of Molecular Shape Factors in Vapor-Liquid Equilibrium Calculations with the Corresponding States Principle," AIChEJ. 14, 568-576 (1968).
10. Leland, T. W., Jr., and Chappelear, P. S., "The Corresponding States Principle—A Review of Current Theory and Practice," Ind. Eng. Chem. 60, 15-43 (July 1968); K. C. Chao (Chairman), "Applied Thermodynamics," ACS Publications, Washington, D.C., 1968, p. 83.
11. Barner, H. E., Pigford, R. L., Schreiner, W. C., Proc. Am. Pet. Inst. (Div. Ref.) 46 244 (1966).
12. Lenoir, J. M., Koppany, C. R., Hydrocarbon Proc. 46, 249 (1967).
13. Soave, Giorgio, "Equilibrium constants from a modified Redlich-Kwong equation of state," Chem. Eng. Sci. 27, 1197-1203 (1972).
14. Peng, D. Y., Robinson, D. B., Ind. Eng. Chem. Fundamentals 15 (1976).
15. Spear, R. R., Robinson, R. L., Chao, K. C., IEC Fund., 8 (1) 2 (1969).
16. Prausnitz, J. M., Cheuh, P. L., Computer Calculations for High-Pressure Vapor-Liquid Equilibrium, Prentice-Hall (1968).
17. Benedict, Webb, and Rubin, Chem. Eng. Prog. 47, 419 (1951).
18. Wilson, G. M., Adv. Cryro. Eng., Vol. II, 392 (1966).
19. Zudkevitch, D., Joffe, J., AIChE J., 16 (1) 112 (1970).
20. Starling, K. E., Powers, J. E., IEC Fund., 9 (4) 531 (1970).
21. Holmes, A. S., Ryan, J. M., Price, B. C., and Stying, R. E., Proceedings of G.P.A., page 75 (1982).
22. Hwang, S. C., Lin, H. M., Chappelear, P. S., and Kobayashi, R., "Dew Point Values for the Methane Carbon Dioxide System," G.P.A. Research Report RR-21 (1976).
23. Price, B. C., "Looking at CO_2 recovery," Oil & Gas J., p. 48-53 (Dec. 24, 1984).
24. Nagahana, K., Kobishi, H., Hoshino, D., and Hirata, M., "Binary Vapor-Liquid Equilibria of Carbon Dioxide-Light Hydrocarbons at Low Temperature," J. Chem. Eng. Japan 7, No. 5, p. 323 (1974).
25. Sobocinski, D. P., Kurata, F., "Heterogeneous Phase Equilibria of the Hydrogen Sulfide-Carbon Dioxide System," AIChEJ. 5, No. 4, p. 545 (1959).
26. Ryan, J. M. and Holmes, A. S., "Distillation Separation of Carbon Dioxide from Hydrogen Sulfide," U.S. Patent No. 4,383,841 (1983).
27. Denton, R. D., Rule, D. D., "Combined Cryogenic Processing of Natural Gas," Energy Prog. 5, 40-44 (1985).
28. Redlich, O., Kwong, J. N. S., Chem. Rev. 44, 233 (1949).
29. Benedict, M., Webb, G. B., Rubin, L. C., "An Empirical Equation for Thermodynamic Properties of Light Hydrocarbons and Their Mixtures," Chem. Eng. Prog. 47, 419-422 (1951); J. Chem. Phys. 8, 334 (1940).
30. van der Waals, J., "Die Continuitat des Gasformigen und Flussigen Zustandes," Barth, Leipzig (1899).
31. Peng, D. Y., Robinson, D. B., "A New Two-Constant Equation of State," Ind. Eng. Chem. Fundamentals 15, 59-64 (1976).
32. RR-76 Hong, J. H., Kobayashi, Riki, "Phase Equilibria Studies for Processing of Gas from CO_2 EOR Projects (Phase II).
33. Case, J. L., Ryan, B. F., Johnson, J. E., "Phase Behavior in High-CO_2 Gas Processing," Proc. 64th GPA Conv., p. 258 (1985).

Additional References

See listing in Section 1 for GPA Technical Publications (TP) and Research Reports (RR). Note that RR-64, RR-77, and RR-84 provide extensive evaluated references for binary, ternary, and multicomponent systems. Also as a part of GPA/GPSA Project 806, a computer data bank is available through the GPA Tulsa office.

Another extensive tabulation of references only is available from Elsevier Publishers of Amsterdam for the work of E. Hala and I. Wichterle of the Institute of Chemical Process Fundamentals, Czechoslovak Academy of Sciences, Prague-Suchdol, Czechoslovakia.

Also, Hiza, M. J., Kidnay, A. J., and Miller, R. C., Equilibrium Properties of Fluid Mixtures Volumes I and II, IFI/Plenum, New York, 1975. See Fluid Phase Equilibria for various symposia.

K-DATA CHARTS FOLLOW AS LISTED BELOW

Methane-Ethane Binary
Nitrogen P_k 2000 psia (13 800 kPa)
Methane through Decane P_k 3000 psia (20 700 kPa)
Hydrogen Sulfide P_k 3000 psia (20 700 kPa)

FIG. 25-8
Critical Locus as Developed for Convergence Pressure
(Formerly used for Convergence Pressure for Hydrocarbons)

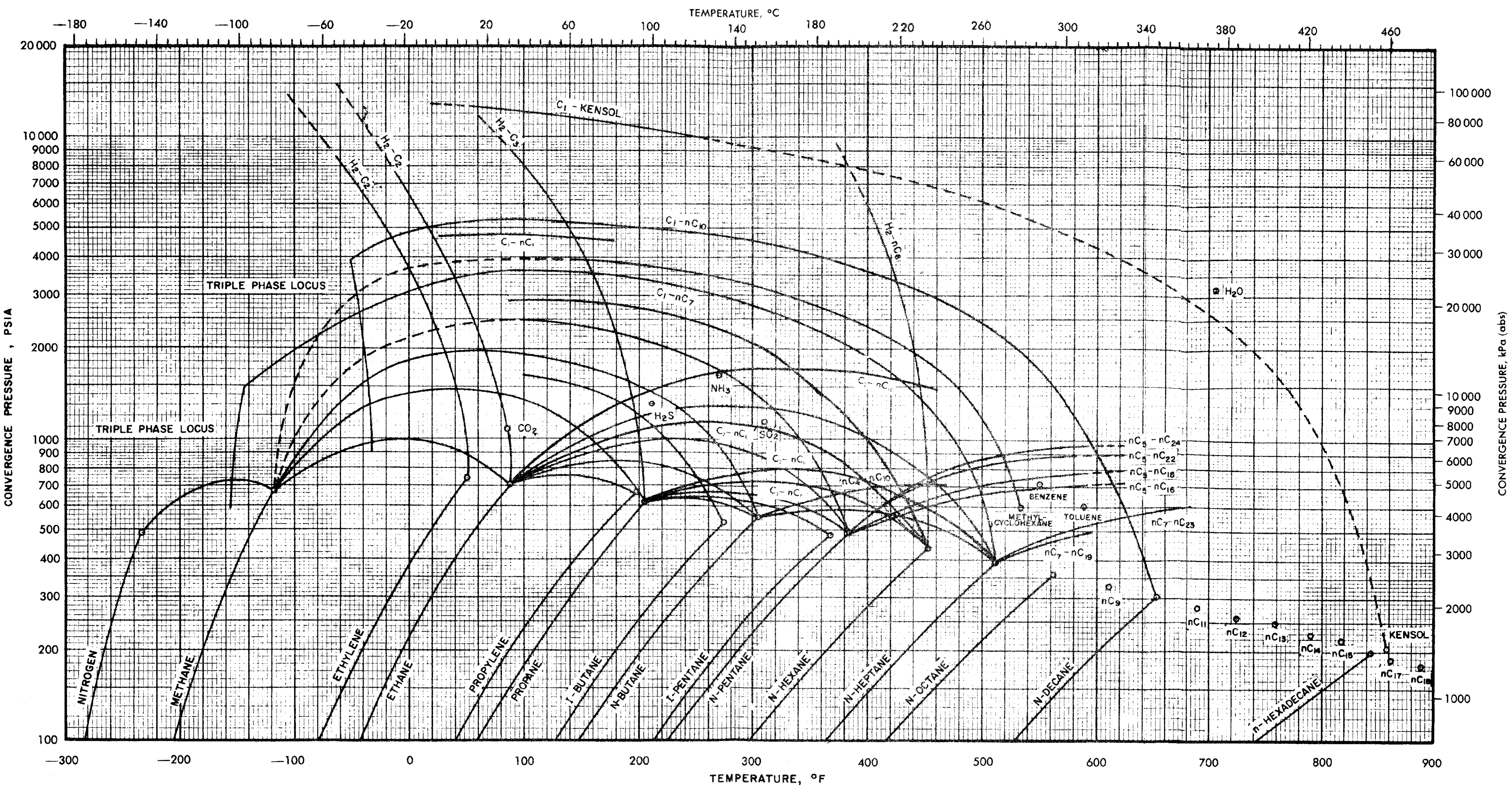

NOTE: See TP-22 for an explanation of the development of this figure.

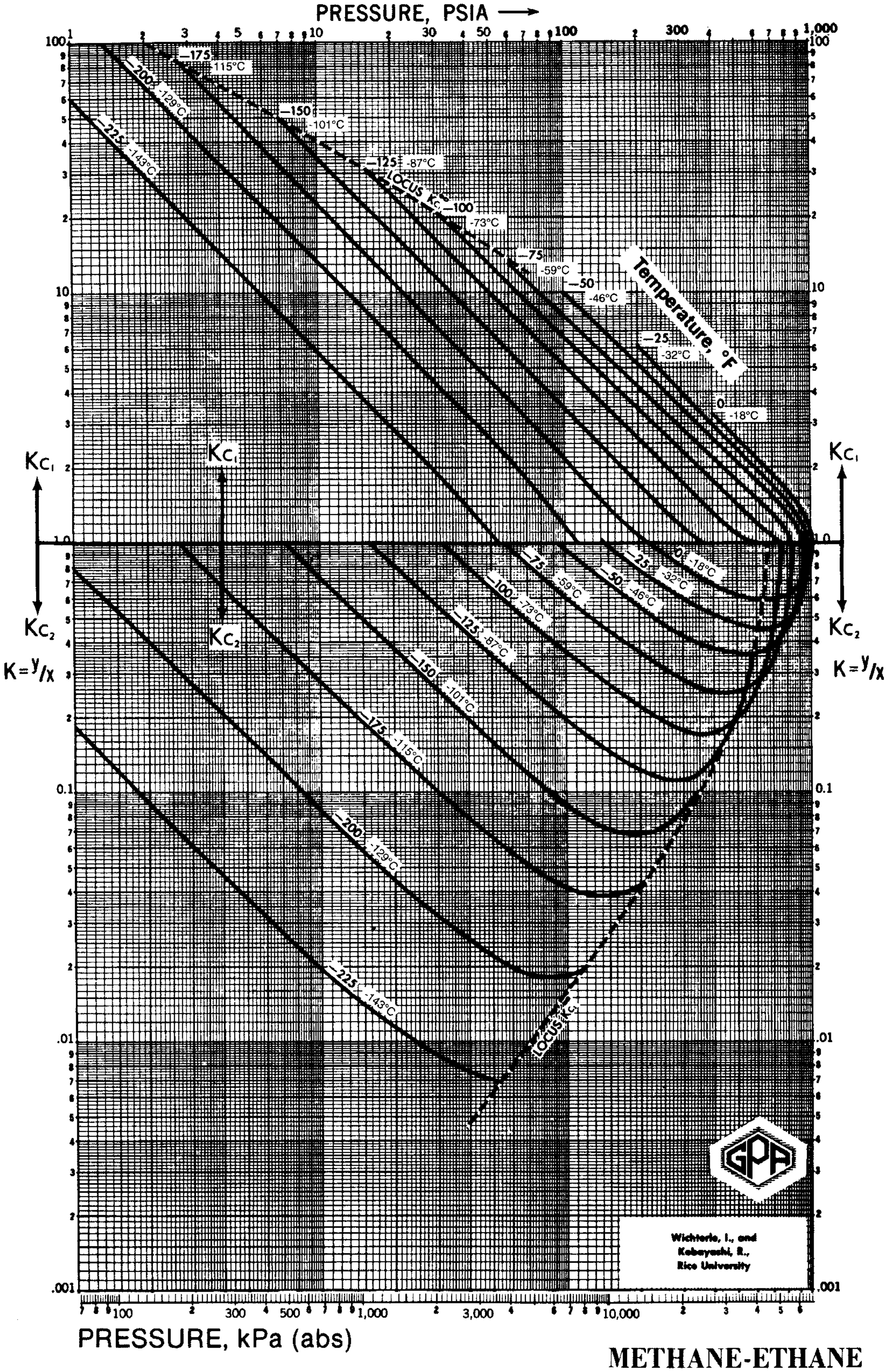

METHANE-ETHANE BINARY

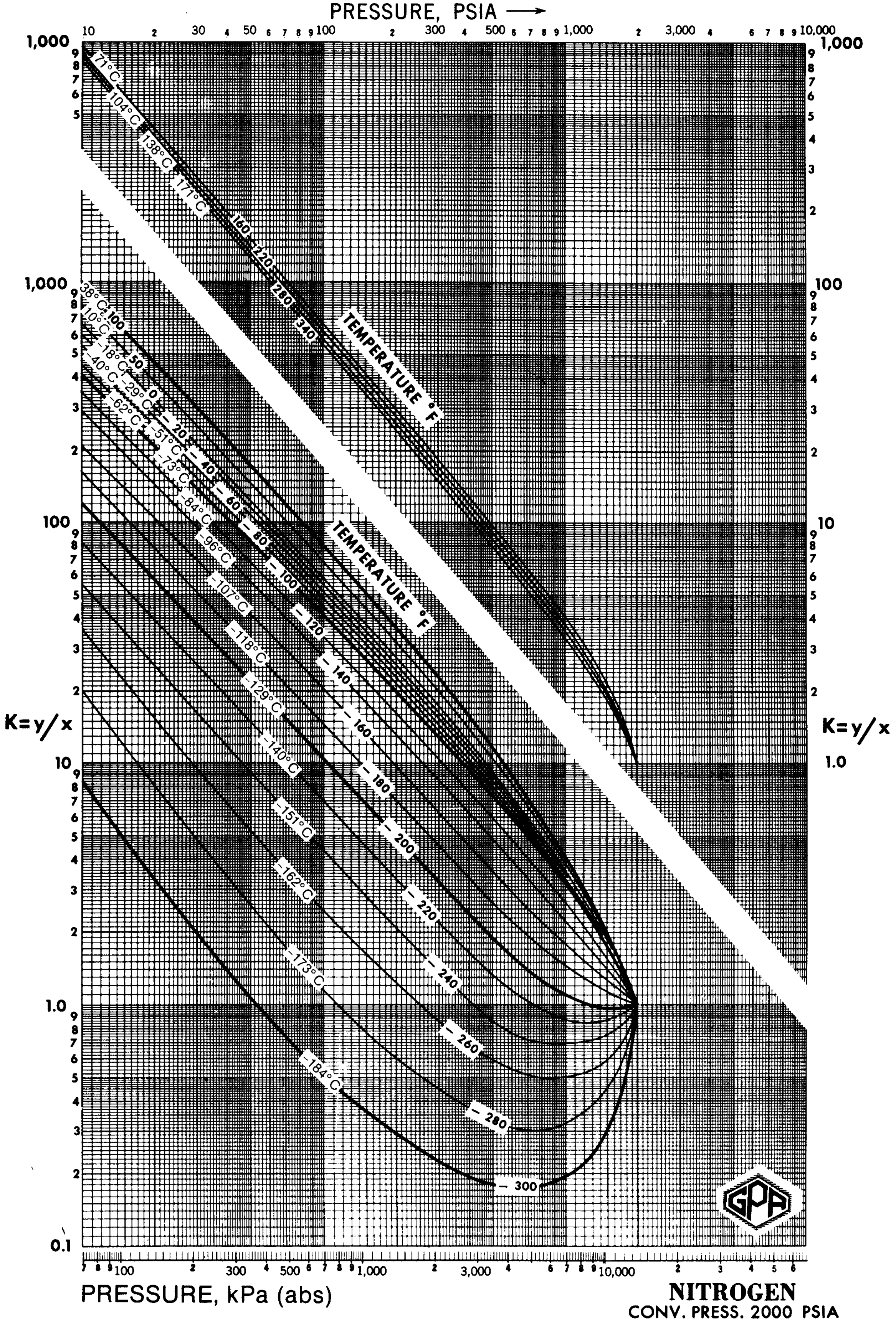

NITROGEN

CONV. PRESS. 2000 PSIA

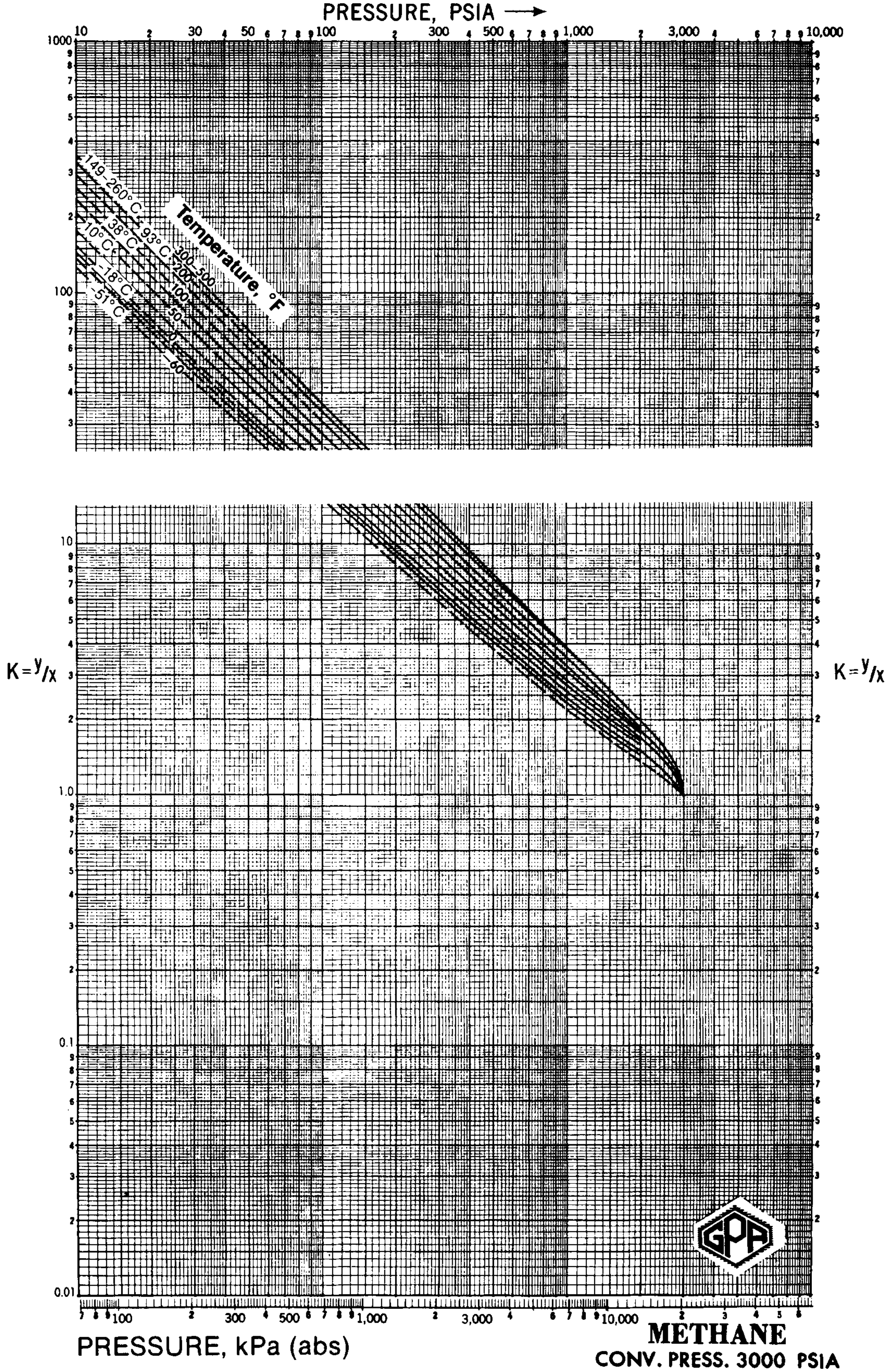

METHANE

CONV. PRESS. 3000 PSIA

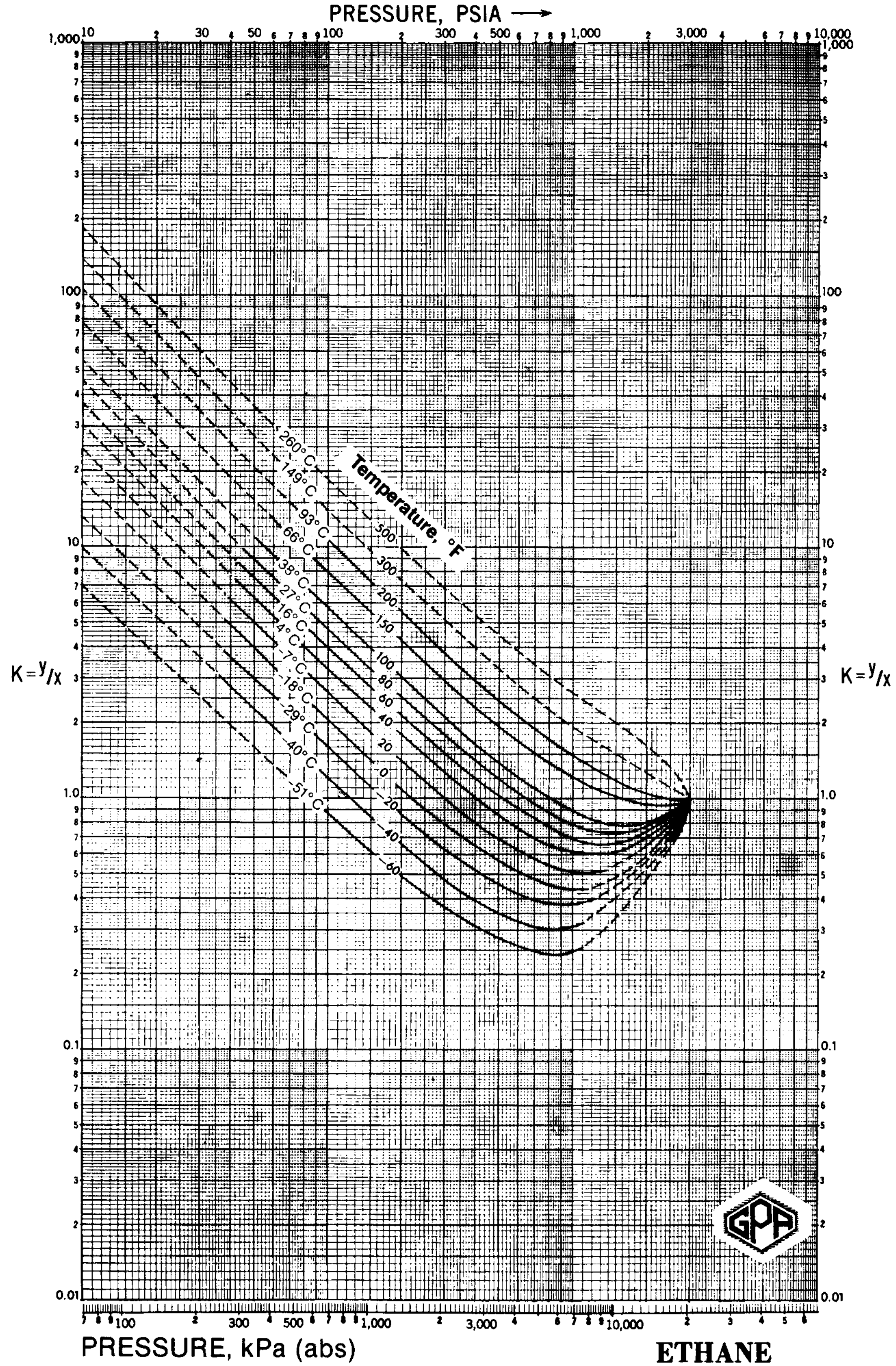

ETHANE

CONV. PRESS. 3000 PSIA

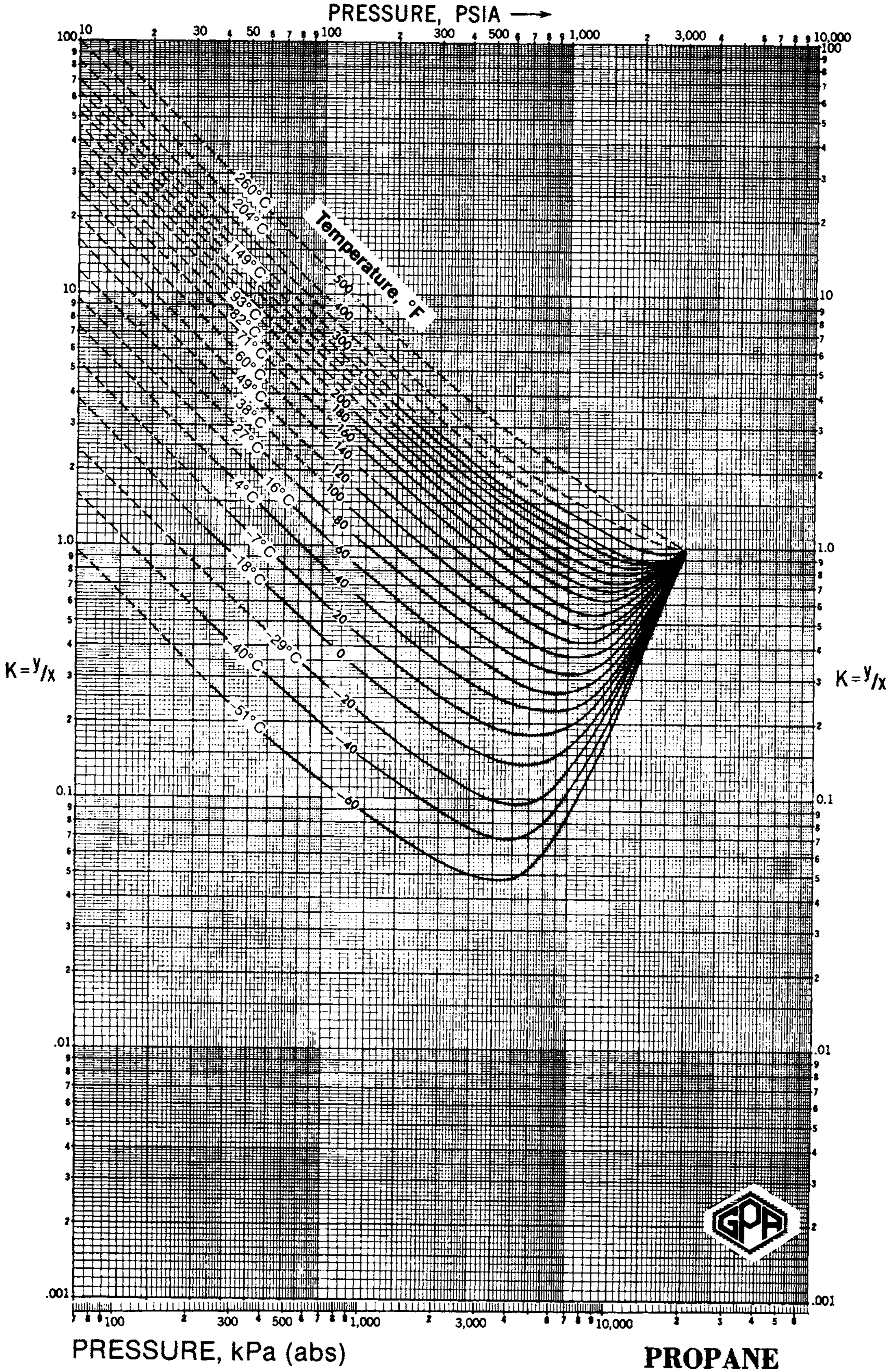

PROPANE

CONV. PRESS. 3000 PSIA

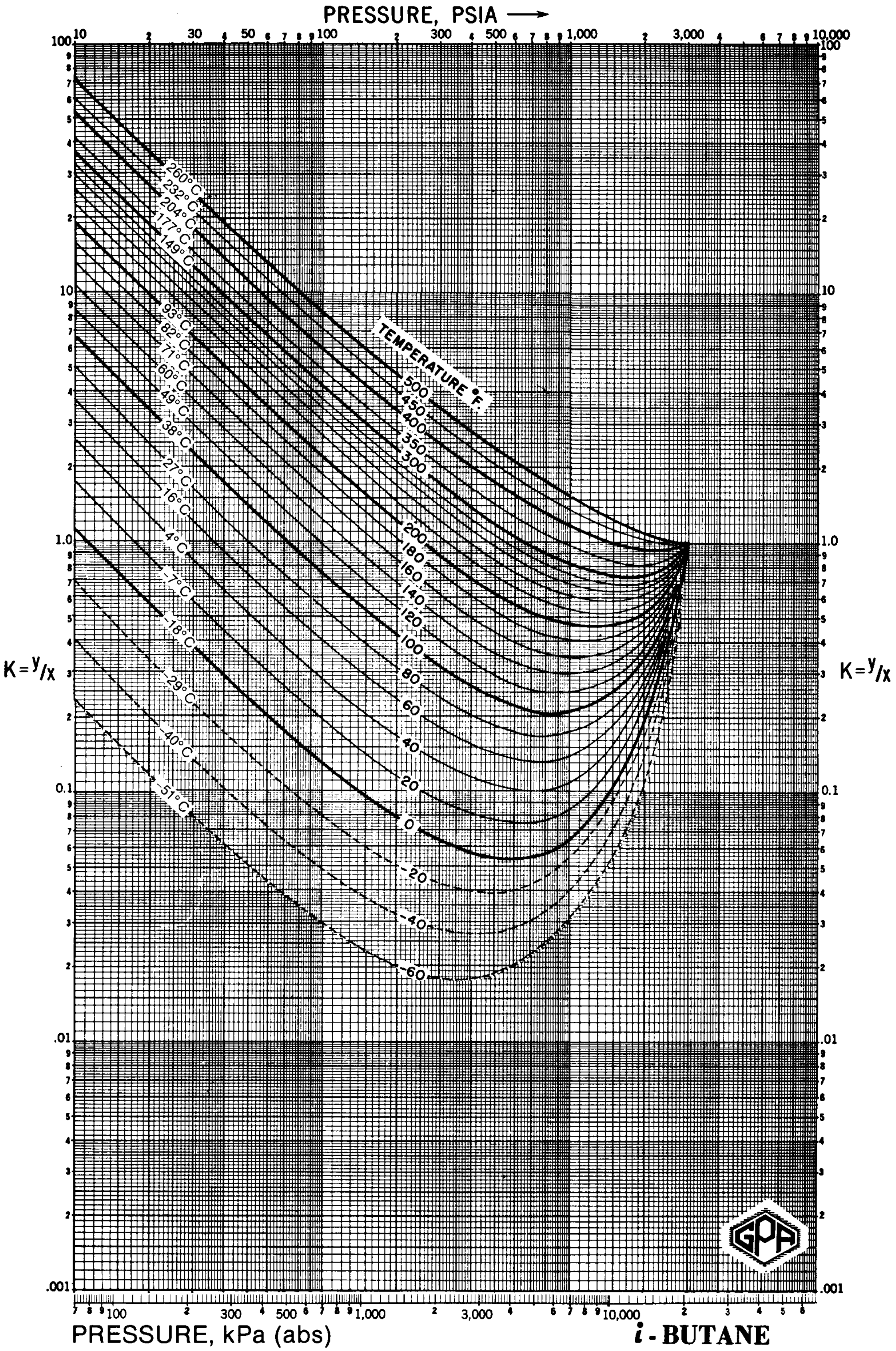

i-BUTANE

CONV. PRESS. 3000 PSIA

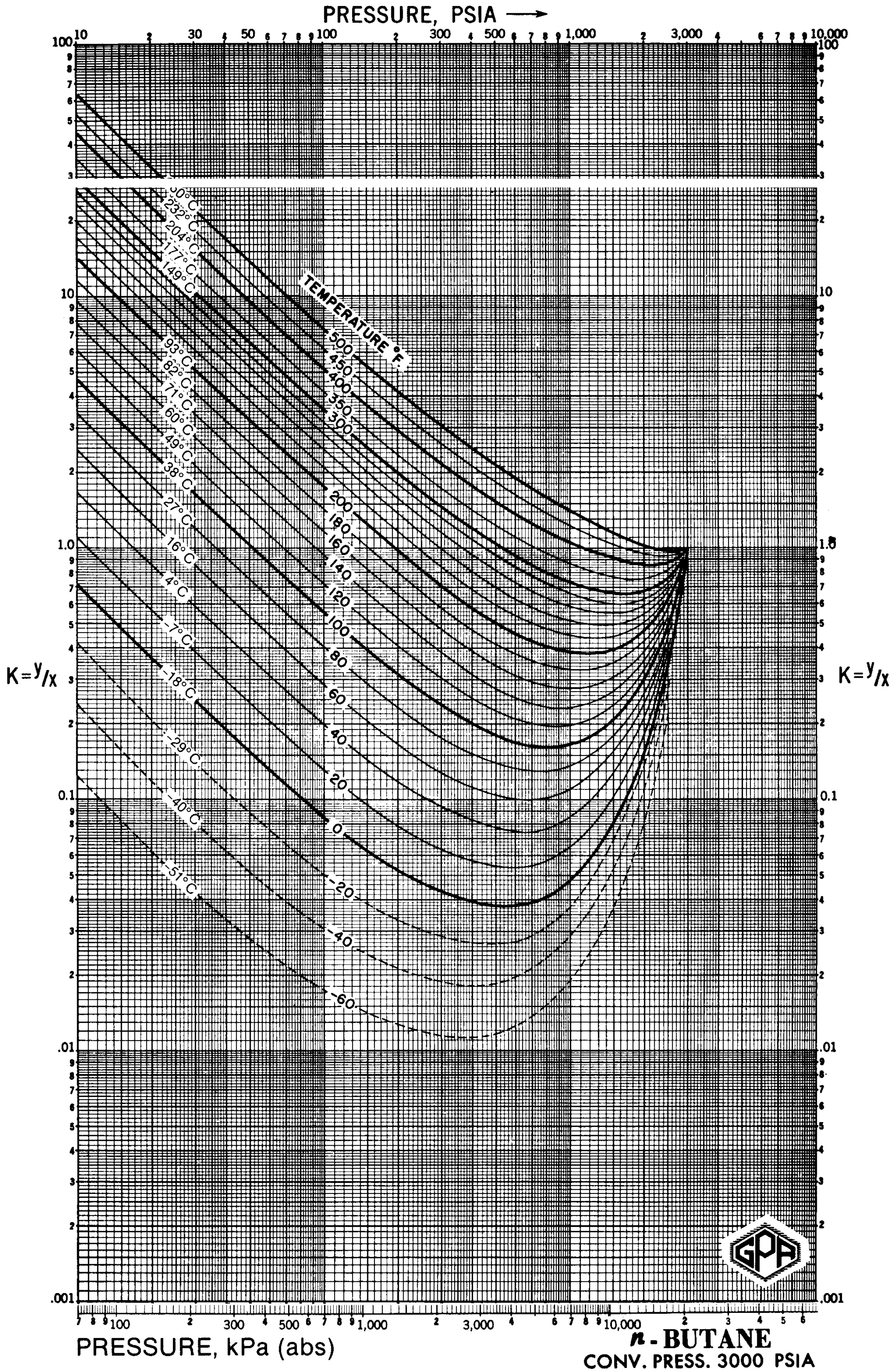

n-BUTANE

CONV. PRESS. 3000 PSIA

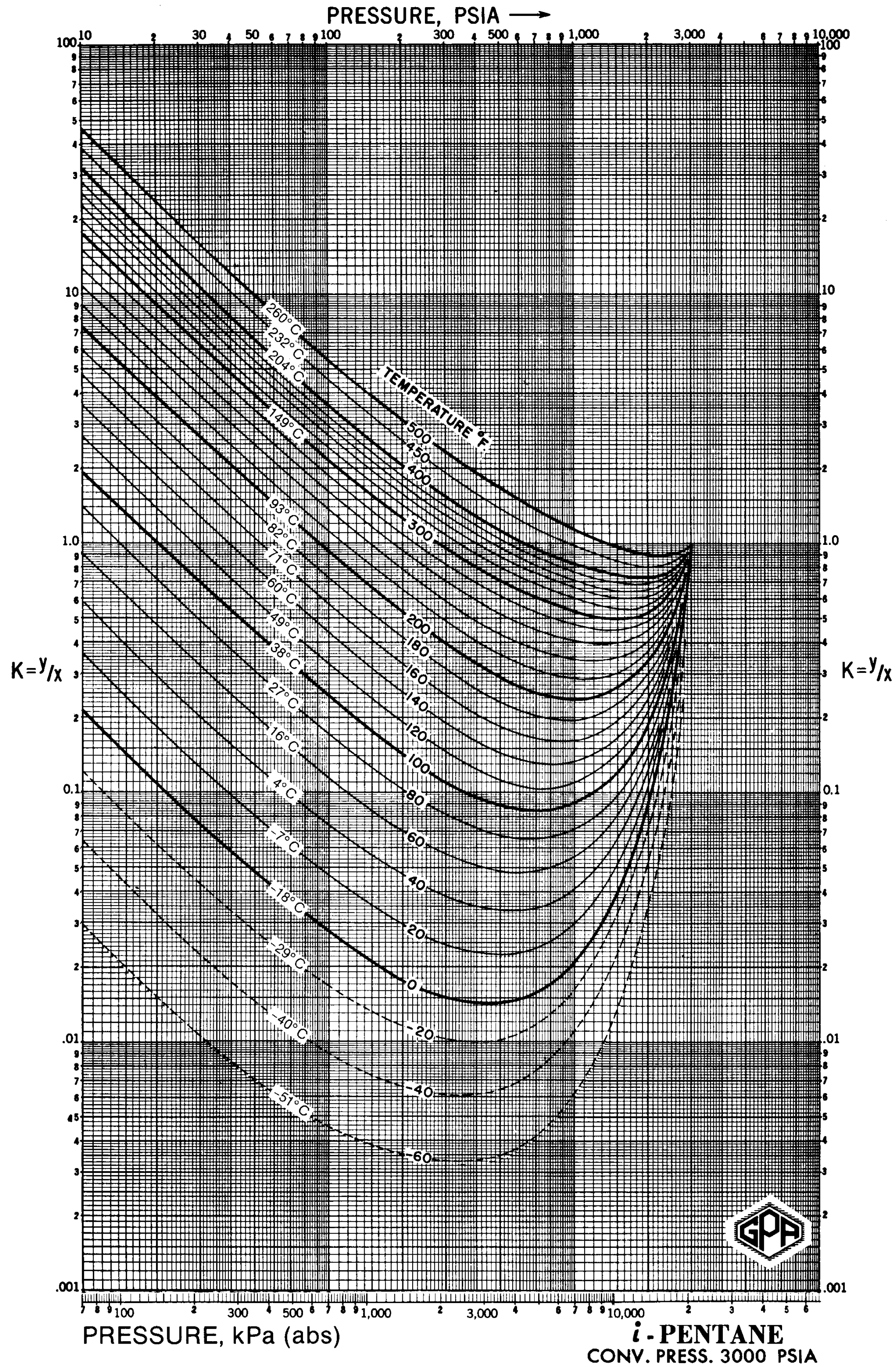

***i*-PENTANE**

CONV. PRESS. 3000 PSIA

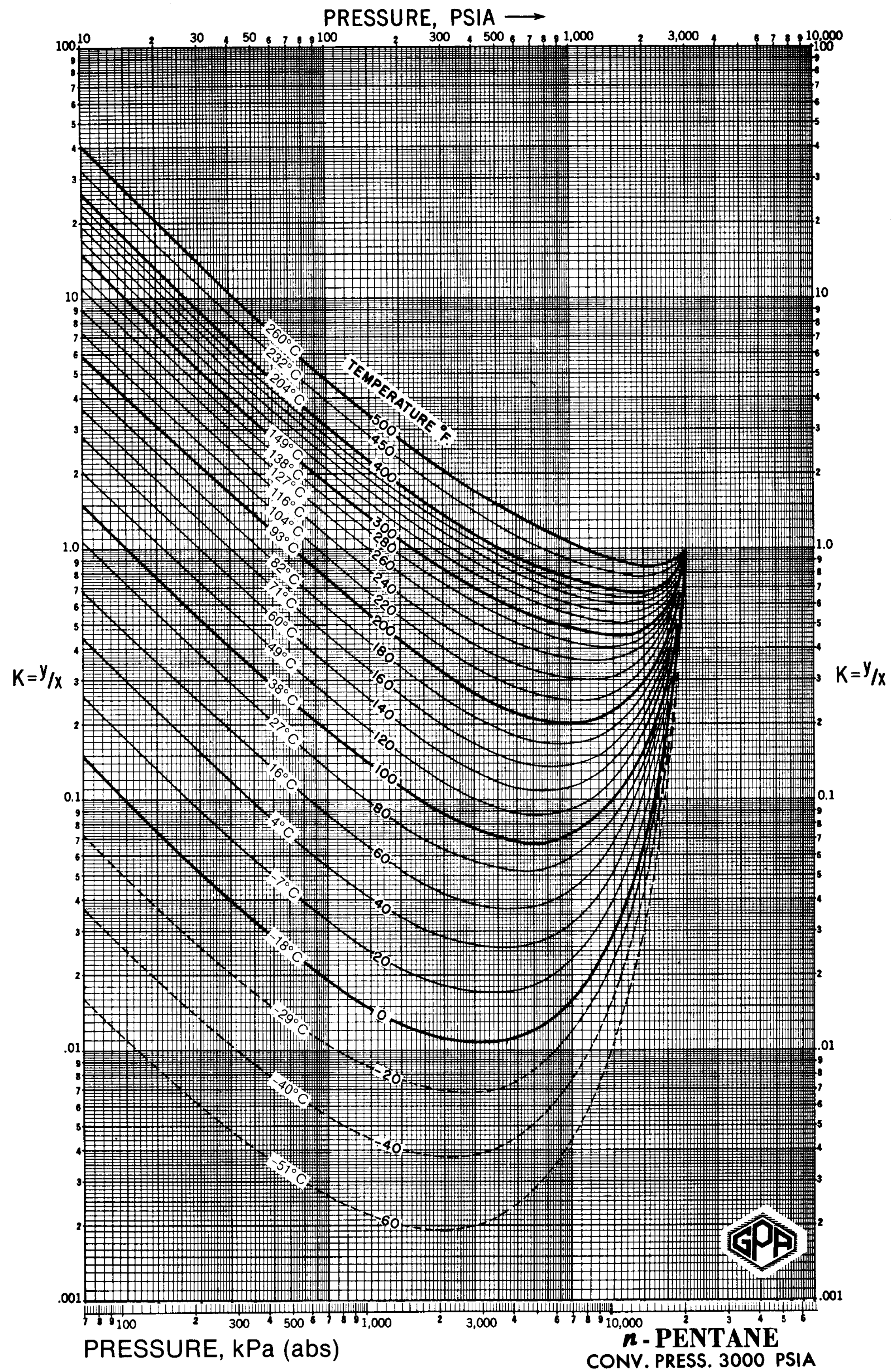

n-PENTANE

CONV. PRESS. 3000 PSIA

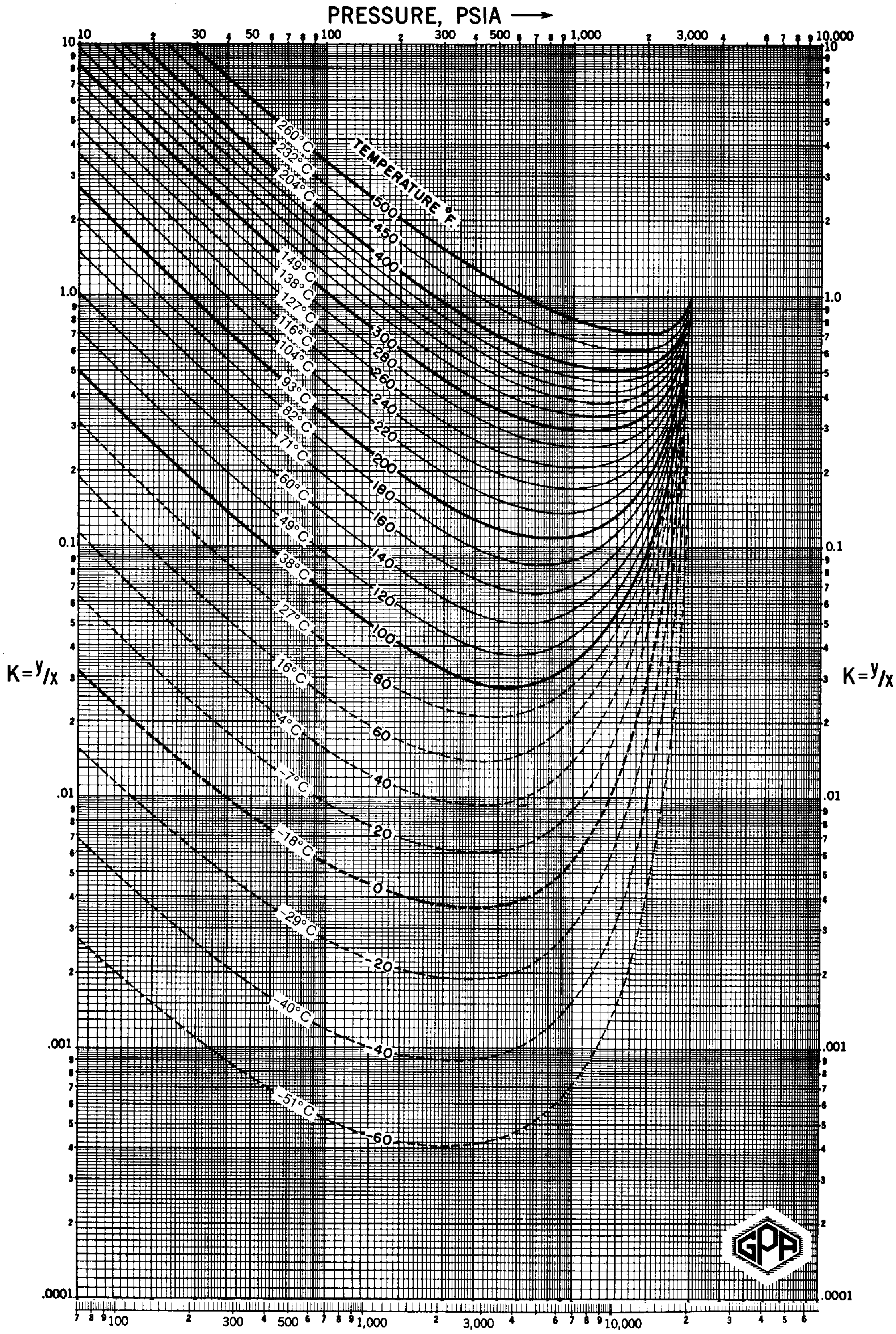

HEXANE

CONV. PRESS. 3000 PSIA

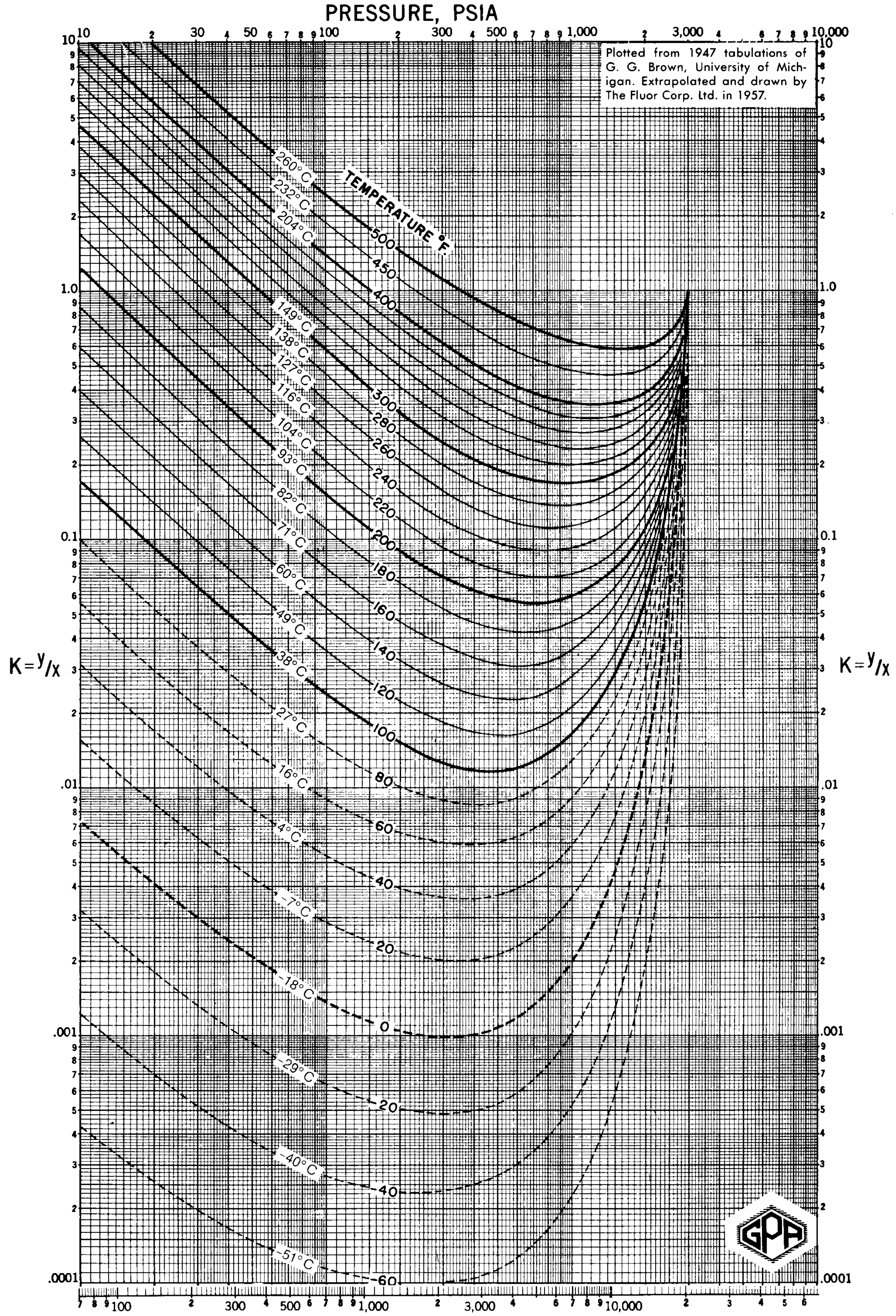

Plotted from 1947 tabulations of G. G. Brown, University of Michigan. Extrapolated and drawn by The Fluor Corp. Ltd. in 1957.

HEPTANE

CONV. PRESS. 3000 PSIA

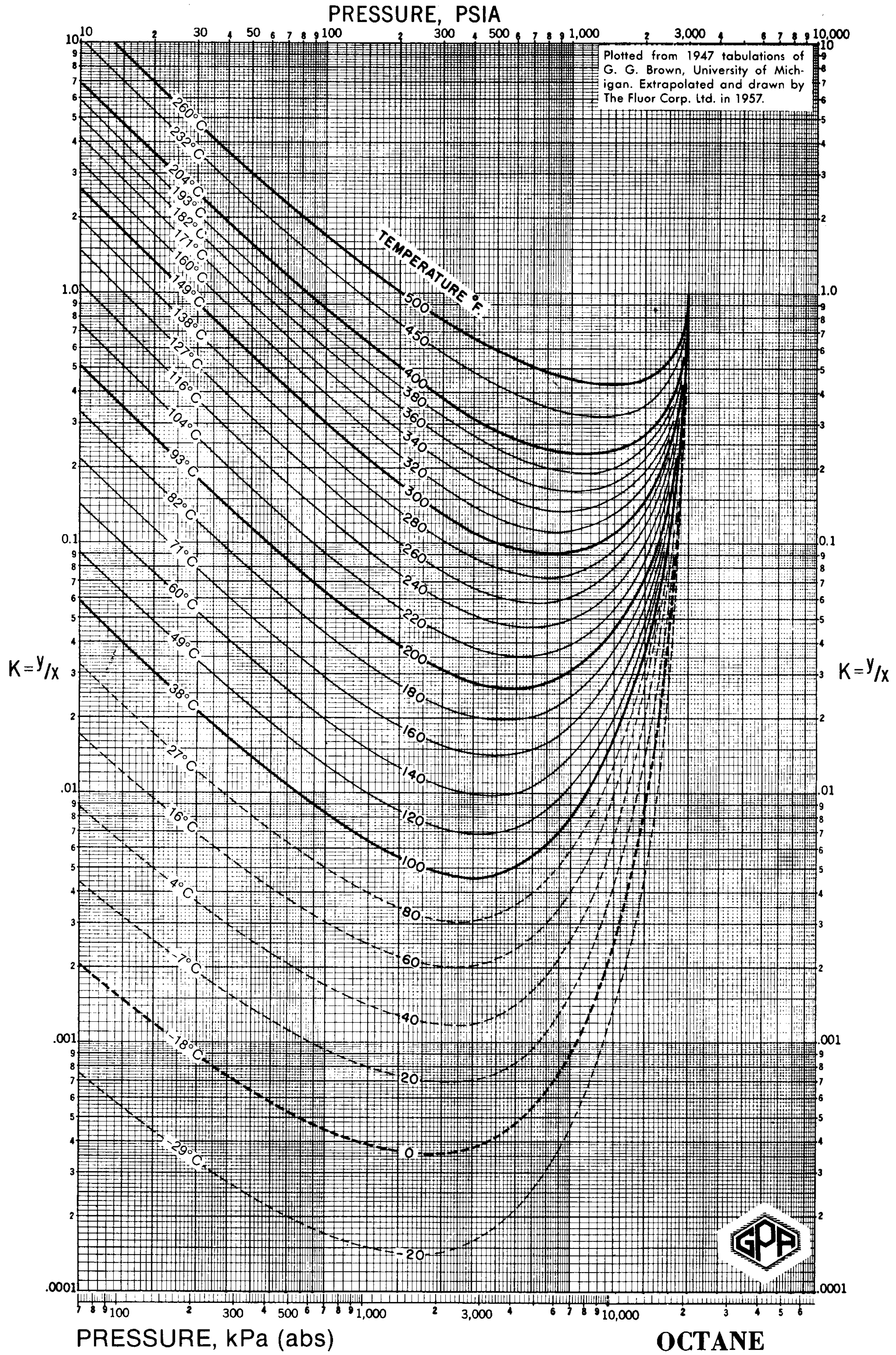

Plotted from 1947 tabulations of G. G. Brown, University of Michigan. Extrapolated and drawn by The Fluor Corp. Ltd. in 1957.

OCTANE

CONV. PRESS. 3000 PSIA

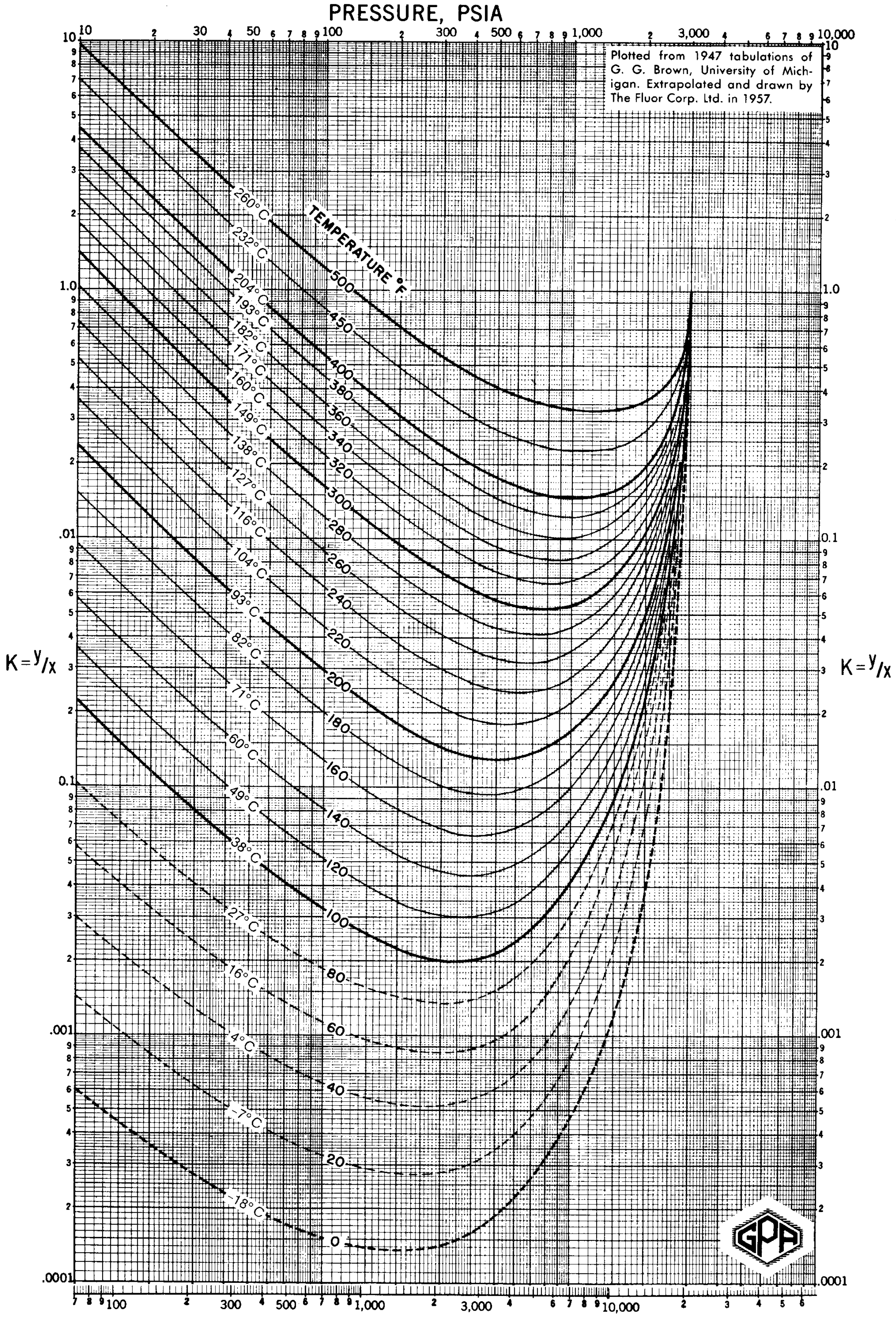

Plotted from 1947 tabulations of G. G. Brown, University of Michigan. Extrapolated and drawn by The Fluor Corp. Ltd. in 1957.

NONANE

CONV. PRESS. 3000 PSIA

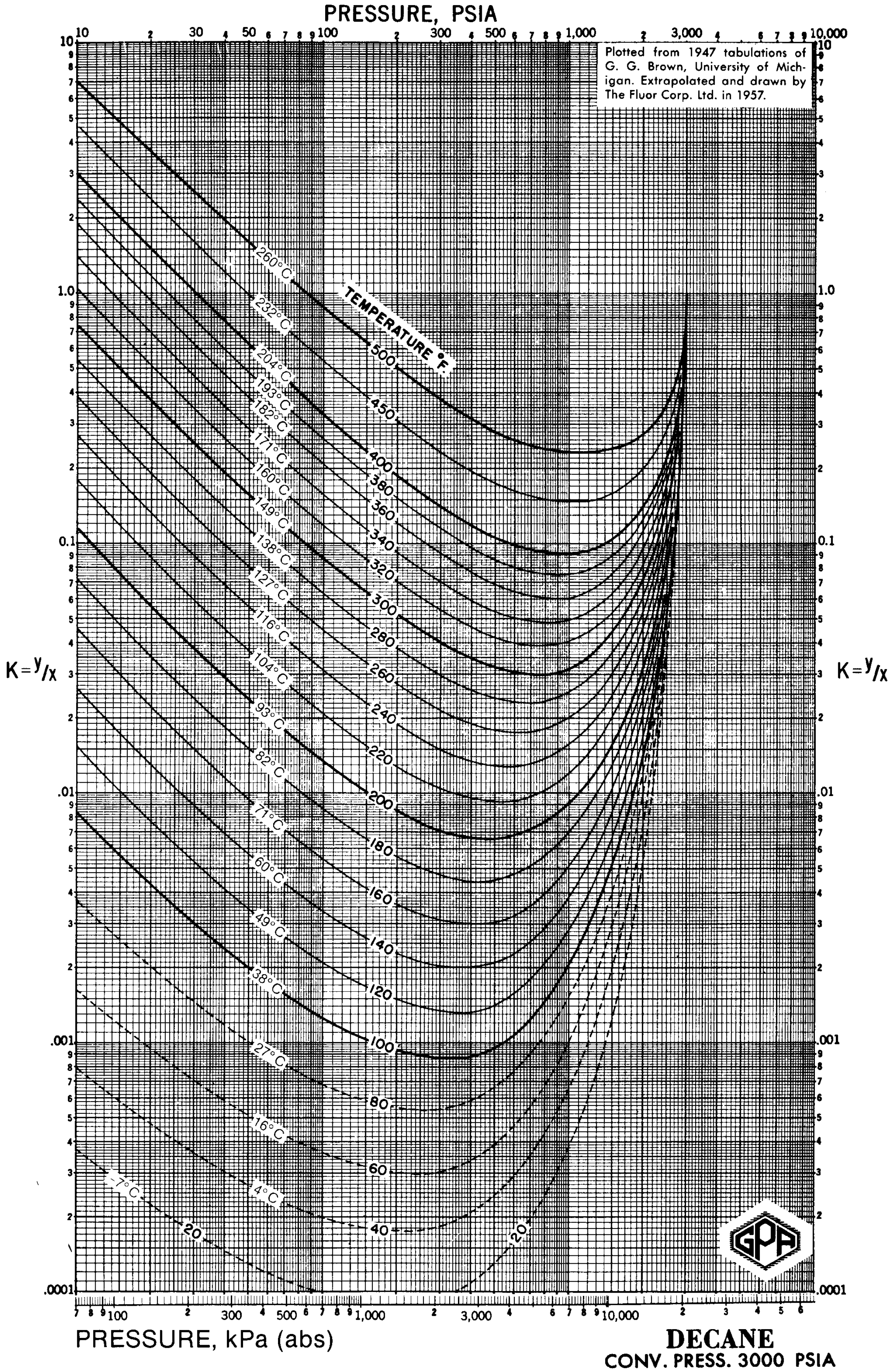

Plotted from 1947 tabulations of G. G. Brown, University of Michigan. Extrapolated and drawn by The Fluor Corp. Ltd. in 1957.

DECANE

CONV. PRESS. 3000 PSIA

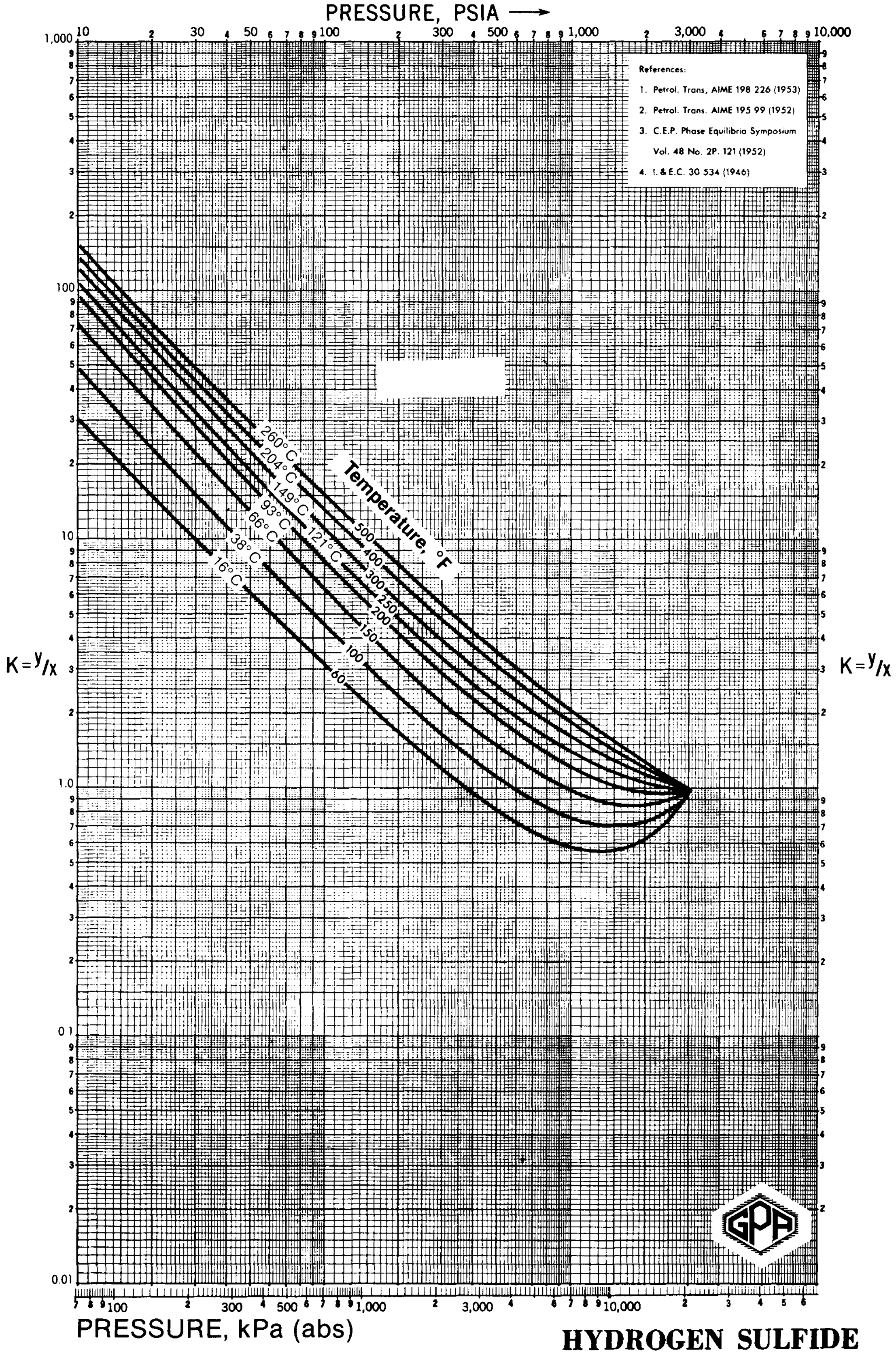

References:

1. Petrol. Trans, AIME 198 226 (1953)
2. Petrol. Trans. AIME 195 99 (1952)
3. C.E.P. Phase Equilibria Symposium Vol. 48 No. 2P. 121 (1952)
4. I. & E.C. 30 534 (1946)

HYDROGEN SULFIDE
CONV. PRESS. 3000 PSIA

NOTES:

SECTION 26

Members

Gas Processors Suppliers Association

6526 East 60th Street
Tulsa, Oklahoma 74145
Phone: 918-493-3872
Fax: 918-493-3875
e-mail: gpsa@gasprocessors.com

The following is a listing of the members of GPSA. Please contact them directly for further information. Behind this listing of members, the GPSA companies are classified by the type of services and supplies that they provide to the industry. Services begin on page 26-10; Supplies begin on page 26-21.

Company & Address	Phone	Fax
3M Company 2465 Lexington Ave. So. Mendota Heights, MN 55120 www.mmm.com	651-737-0065	651-733-9525
ABB Inc. – Totalflow 431 N. Park Central Dr., Suite 100 Houston, TX 77073 www.abb.com/totalflow	281-869-5211	281-869-5203
ACS Industries, LP Separations Division - Tower & Vessel Internals 14211 Industry Rd. Houston, TX 77053 www.acsseparations.com	800-231-0077	713-433-6201
Advanced Extraction Technologies, Inc. 2 Northpoint Dr., Suite 820 Houston, TX 77060 www.aet.com	281-447-0571	281-447-5601
Afton Pumps Inc. 7335 Ave. No. Houston, TX 77011 www.aftonpumps.com	713-923-9731	713-923-3902
Aggreko LLC 12000 Areospace Ave., Suite 300 Houston, TX 77034-5588 www.aggreko.com	713-852-4500	713-852-4591
Air Products and Chemicals, Inc. 7201 Hamilton Blvd. Allentown, PA 18195-1501 www.airproducts.com	610-481-4544	610-481-3406
air-x-changers 5215 Arkansas Rd. Catoosa, OK 74105 www.airx.com	918-266-1850	918-266-4512
Air-x-hemphill 2230 E. 49th St. Tulsa, OK 74105 www.airxhemphill.com	918-712-8268	918-712-8269

Company & Address	Phone	Fax
Aker Kvaerner, Inc. 7909 Parkwood Circle Dr. Houston, TX 77036 www.akerkvaerner.com	713-988-2002	713-772-4673
Albert Garaudy and Associates, Inc. 3500 No. Causeway Blvd., Suite 600 Metairie, LA 70002 www.aga-engineers.com	504-846-6400	504-838-8955
Alcoa World Chemicals, Adsorbents and Catalysts 15333 JFK Blvd., Suite 425** Houston, TX 77032 www.adcats.alcoa.com	281-590-7856	281-590-3294
Allesco 740 W. Elgin Broken Arrow, OK 74012 www.allesco.com	800-331-4018, 918-258-3556	918-251-4582
Alliance Wood Group Engineering, L.P. 16340 Park Ten Place Dr. Houston, TX 77084 www.alliance-engineering.com	713-647-9701	713-647-9696
Amercool Manufacturing, Inc. 6312 So. 39th W. Ave. Tulsa, OK 74132 www.amercool.com	918-445-5366	918-445-2857
American Measurement Services P. O. Box 37, 105 No. Frisco Ames, OK 73718	580-753-4387	580-753-4388
Ariel Corporation 35 Blackjack Rd. Mount Vernon, OH 43050 www.arielcorp.com	740-397-0311	740-397-3856
Aspen Technology, Inc. Ten Canal Park Cambridge, MA 02141 www.aspentech.com	617-949-1000	617-949-1030

Company & Address	Phone	Fax
Atofina Chemicals, Inc., (Adsorbents Group) 2000 Market St. Philadelphia, PA 19103 www.siliporite.com	215-419-7152	215-419-5230
Atofina Chemicals Inc., Technical Polymers Division 2000 Market St. Philadelphia, PA 19103 www.atofinachemicals.com	215-419-7329	215-419-7497
Baker Energy 16340 Park Ten Place, Suite 320 Houston, TX 77084 www.mbakercorp.com	281-579-7850	281-579-4577
Barry D. Payne & Associates, Inc. P. O. Box 1159 Stafford, TX 77497 www.bdpayne.com	281-240-4488	281-240-3913
Bartlett Equipment Company, Inc. P. O. Box 470246 Tulsa, OK 74147 www.bartlettequipment.com	918-627-7040	918-665-8469
BASF Corporation 15710 JFK Blvd., Suite 550 Houston, TX 77032 www.amdea.com	281-985-2416	281-985-2401
BCCK Engineering, Inc. 2500 No. Big Spring Midland, TX 79705 www.bcck.com	432-685-6095	432-685-7021
BE&K Construction - Houston 14701 St. Mary's Lane, Suite 500 Houston, TX 77079-2924 www.bek.com	832-486-4556	832-486-4580
Bechtel 3000 Post Oak Blvd. Houston, TX 77056 www.bechtel.com	713-235-2000	713-960-9031
Bexar Energy Holdings, Inc. 105 So. Saint Mary's, Suite 1922 San Antonio, TX 78205	210-342-7106	210-308-7250
Bill Spitzer & Associates 11530 Brittmoore Park Dr. Houston, TX 77041 www.spitzer-assoc.com	713-937-8977	713-937-1856
Black & Veatch Pritchard, Inc. Black & Veatch-Gas, Oil & Chemicals Division 11401 Lamar Overland Park, KS 66211	913-458-2000	913-458-6098
11111 Richmond Ave., Suite 300 Houston, TX 77082 www.bv.com	713-260-0454	713-260-0460
Boots & Coots, Inc. 11615 No. Houston-Rosslyn Rd. Houston, TX 77086 www.bncg.com	281-931-8884, 800-BLOWOUT	281-931-8302
Bowden Construction Co., Ltd. P. O. Box 12308 Odessa, TX 79768	432-366-8877	432-366-0936
Brice Equipment Company P. O. Box 7945 Midland, TX 79708	432-697-3111	432-697-6805
Bryan Research & Engineering, Inc. P. O. Box 4747 Bryan, TX 77805 www.bre.com	979-776-5220	979-776-4818
C3 Resources 2050 No. Loop W., Suite 227 Houston, TX 77018-8111 www.c3resources.com	713-476-9958	713-476-9975

Company & Address	Phone	Fax
CAP-HIS Emissions Reduction Systems 9837 Whithorn Dr. Houston, Texas 77095 www.cleanairpartners.com	281-463-8883	281-463-8951
Cardinal Gas Services, LLC 1700 Pacific Ave., Suite 2950 Dallas, TX 75201	214-468-0700	214-468-0701
Caterpillar, Inc. - Global Petroleum Group 13105 NW Freeway, Suite 1010 Houston, TX 77040 www.cat.com	713-329-2207	713-329-2211
CB&I Howe-Baker Process & Technology 3102 E. 5th St. Tyler, TX 75701 www.cbiepc.com	903-595-7911	903-595-7751
CCR Technologies Inc. 11375 W. Sam Houston Parkway So. Suite 201 Houston, TX 77031 www.reclaim.com	281-988-5800	281-988-5858
Chandler Engineering Company, LLC 2001 No. Indianwood Ave. Broken Arrow, OK 74012 www.chandlereng.com	918-250-7200	918-459-0165
Chart Heat Exchangers 2191 Ward Ave. La Crosse, WI 54601 www.chart-ind.com	608-787-3333	608-787-2141
Chart Inc. - Process Systems Division 20 Walkup Dr. Westborough, MA 01581 www.chart-ind.com	508-898-0361	—
Chiyoda Corporation 2-12-1, Tsurumichuo, Tsurumi-ku Yokohama 230-8601, JAPAN	81-45-506-7337	81-45-506-7085
City Pipe & Supply Corp. 2108 W. 2nd Odessa, TX 79763 www.citypipe.com	800-688-7473, 432-332-1541	432-333-2300
Clayton Hamm, Cryogenic Specialist 1104 Red Oak Rd. W. Red Oak, TX 75154	972-576-0329, 214-704-9831	—
CLOUGH Limited Level 6, 251 St. Georges Terrace Perth, 6000 WESTERN AUSTRALIA www.clough.com.au	618-9281-9281	618-9481-6699
Coastal Chemical Co., LLC 5300 Memorial Dr., Suite 250 Houston, TX 77007-8250 www.coastalchem.com	713-865-8787	713-865-8788
Coastal Flow Measurement, Inc. 2222 Bay Area Blvd., Suite 200 Houston, TX 77058 www.coastalflow.com	281-282-0622, 800-231-9741	281-282-0792
Comau Pico 120 W. Virginia St., Suite 211 McKinney, TX 75069	972-562-0087	503-214-5598
Compressor Controls Corporation 4725 121st St Des Moines, IA 50323 www.cccglobal.com	515-270-0857	515-270-1331
Compressor Engineering Corporation 5440 Alder Houston, TX 77081-1798 www.ceconet.com	800-879-2326	713-664-6444

Company & Address	Phone	Fax
Compressor Systems, Inc. P. O. Box 60760 Midland, TX 79711 www.compressor-systems.com	432-563-1170	432-563-0760
CompressorTech Two 20855 Watertown Rd., Suite 220 Waukesha, WI 53186 www.dieselpub.com	262-832-5000	262-832-5075
Connelly-GPM, Inc. 3154 So. California Ave. Chicago, IL 60608-5112 www.connellygpm.com	773-247-7231	773-247-7239
Continental Products of Texas P. O. Box 3627 Odessa, TX 79760 www.cptonline.com	432-337-4681	432-337-4685
Control Microsystems 3914 Cypresswood Dr. Spring, TX 77388 www.controlmicrosystems.com	281-651-6300	—
Cook Compressor Group 5411 So. 125th E. Ave., Suite 305 Tulsa, OK 74146 www.cookcompressor.com	800-767-6689	918-252-0380
Cooper Energy Services 714 Darnel Mesquite, TX 75149-5328 www.coopercameron.com	972-602-6810	972-285-5855
Cosa Instrument Corporation 84 Horseblock Rd., Unit G Yaphank, NY 11980 www.cosa-instrument.com	631-345-3434	631-345-5349
Criterion Catalyst & Technologies, LP Two Greenspoint Plaza 16825 Northchase Dr., Suite 1000 Houston, TX 77060 www.criterioncatalysts.com	281-875-7899	281-874-2474
CrystaTech, Inc. 4616 W. Howard Lane, No. 2500 Austin, TX 78728-6302 www.crystatech.com	512-371-0649	512-248-6301
Daniel Measurement and Control 9720 Old Katy Rd. Houston, TX 77055 www.daniel.com	713-827-3874	713-827-3886
DCG Partnership 1, Ltd. 4170 A Main Pearland, TX 77581 www.dcgpartnership.com	281-648-1894	281-648-1895
Dickson & Tryer Engineering Co., Ltd. P. O. Box 60478 Midland, TX 79711-0478 www.dicksontryer.com	432-561-8594	432-561-8990
Domain Engineering Inc. 406 So. Boulder, Suite 234 Tulsa, OK 74103 www.domain-engineering.com	918-582-4280	918-582-4283
Drake Controls, LLC 5227 Langfield Rd. Houston, TX 77040 www.drakecontrols.com	713-996-0190	713-996-0195
Dresser-Rand Company P. O. Box 560 Paul Clark Drive Olean, NY 14760 www.dresser-rand.com	716-375-3000, 713-935-3484	716-375-3178
Dufour Petroleum Inc. P. O. Box 1184 Petal, MS 39465-1184	601-583-9991	601-583-9881

Company & Address	Phone	Fax
Eaton Metal Products Company 4800 York St. Denver, CO 80216 www.eatonmetal.com	303-296-4800	303-296-5736
Elkhorn Construction, Inc. 71 Allegiance Circle Evanston, WY 82930 www.elkhornconstruction.com	307-789-1595	307-789-7145
Elliott Turbomachinery Co. Inc. P. O. Box 4366 Houston, TX 77210-4366 www.elliott-turbo.com	713-984-3800	713-984-3905
Ellipsys, Inc. 6750 W. Loop So., Suite 840 Bellaire, TX 77401 www.ellipsys.com	713-852-9595	713-667-9010
eLynx Technologies, LLC 6655 So. Lewis Ave. Tulsa, OK 74136 www.elynxtech.com	918-496-8500	918-496-8615
Energy Dynamics, Ltd. (EnDyn, Ltd.) 300 W. First St. Alice, TX 78332 www.endyn.com	361-668-8311	361-668-3906
Energy Compression Systems 1319 So. Padre Island Dr. Corpus Christi, TX 78416 www.energycompression.qpg.com	361-882-7900	361-888-6497
Engelhard Corporation 101 Wood Ave. Iselin, NJ 08830 www.engelhard.com	732-205-6979	732-205-5915
Entero Corporation 440 - 2nd Ave. SW, Suite 1500 Calgary, AB, CANADA, T2P 5E9 www.entero.com	403-261-1820, 877-261-1820	403-261-2816
EPC, Inc. 14128 Hwy. 110 So. Whitehouse, TX 75791	903-939-1555	903-939-1566
eSimulation, Inc. 14102 Champion Village Dr. Houston, TX 77069 www.esimulation.com./	713-962-3107	—
Eurecat US Inc. 13100 Bay Park Rd. Pasadena, TX 77507	281-218-0669	—
Exline, Inc. 3256 E. Country Club Rd. Salina, KS 67401 www.exline-inc.com./	800-255-0111	785-826-4425
Fairfield Energy Consultants 10915 Holly Springs Houston, TX 77042	713-780-2767	713-266-7049
Fesco Ltd. 1408 E. Main Alice, TX 78332 www.fescoinc.com	361-664-3479	361-664-3157
Fisher Controls International Inc. P. O. Box 190 Marshalltown, IA 50158 www.emersonprocess.com/ fisher/index.html	641-754-3011	641-754-2903
Fluor Enterprises, Inc. Oil and Gas Group One Fluor Daniel Drive Aliso Viejo, CA 92698 www.fluor.com	949-349-4486	949-349-5458
Ford, Bacon & Davis 7825 Park Place Blvd. Houston, TX 77087	713-845-4345, 713-645-4141	713-645-4240

Company & Address	Phone	Fax
ForeRunner Corporation 411 No. Sam Houston Parkway E. Suite 250 Houston, TX 77060 www.forerunnercorp.com	832-327-0442	832-327-0447
Foster Wheeler USA Corporation 2020 Dairy Ashford Houston, TX 77077 www.fwc.com	281-597-3000	281-597-3028
FWMurphy 5311 So. 122nd E. Ave. Tulsa, OK 74146 www.fwmurphy.com	918-317-4100	918-371-4266
GARZO, Incorporated 4430 Steffani Lane Houston, TX 77041 www.garzoproducts.com	713-466-8679	713-466-8686
Gas Analytical Solutions, Inc. P. O. Box 131147 Tyler, TX 75113-1147	903-581-0017	903-581-5036
Gas Packagers, Inc. 1609 E. 58th Ave. Denver, CO 80216 www.thecompressorcompany.com	303-297-8100	303-297-2765
Gas Technology Corporation 1425 Greenway Dr., Suite 450 Irving, TX 75038 www.gastech.net	972-255-7800	972-550-0071
Gas Technology Products LLC 846 E. Algonquin Rd., Suite A100 Schaumburg, IL 60173	847-285-3850	847-285-3888
GasTech Engineering Corporation 1007 E. Admiral Blvd. Tulsa, OK 74120 www.gastecheng.com	918-663-8383	918-599-9846
Gateway Energy Corporation 500 Dallas St., Suite 2615 Houston, TX 77002 www.gatewayenergy.com	713-336-0844 xt 102	713-336-0855
GE Oil & Gas 540 E. Rosecrans Ave. Gardena, CA 90248	310-329-8447	310-329-8708
Glaucon Capital Partners, LLC 21 Carlton Dr. Mt. Kisco, NY 10549	914-666-4789	435-604-8437
GPM Solutions, Inc. 202 Madison Square Colleyville, TX 76034	817-821-8107	—
GRACE Davison Process Adsorbents 20333 State Hwy. 249, Suite 200 Houston, TX 77070 www.gracedavison.com	281-378-1591	281-378-1593
Graves Analytical Services LLC P. O. Box 253 Hugoton, KS 67951 www.gaspeak.com	620-428-6053, 620-420-2277	620-428-6069
Gregg Industrial Insulators, Inc. 201 Estes Dr. Longview, TX 75603-1726	903-757-5754	903-757-8864
Gulf Coast Chemical, Inc. 220 Jacqulyn St. Abbeville, LA 70510	337-898-0213	337-893-1563
Gulf Coast Dismantling P. O. Box 5249 Pasadena, TX 77508-5249	281-487-0595	281-487-0597
Gulsby Engineering, Inc. P. O. Box 549 Humble, TX 77347	281-446-4230	281-446-5445

Company & Address	Phone	Fax
H. J. Baker, P.E. 1511 Rock Ridge Dr. Cleveland, OK 74020	918-358-5286	425-928-2637
H & S Valve Inc. 6704 No. County Rd. West Odessa, TX 79764	432-362-0486	432-368-5052
Hammco, Inc. 6900 No. 115th E. Ave. Owasso, OK 74055 www.hammco-aircoolers.com	918-272-9575	918-272-9585
Hanover Compression, L.P. 20602 E. 81st St. Broken Arrow, OK 74015	918-259-2338	918-259-2856
Harris Group Inc. 1999 Broadway, Suite 1500 Denver, CO 80202 www.harrisgroup.com	303-291-0355	303-291-0136
Hart's Gas Processors Report 800 Wilcrest Dr., #125 Houston, TX 77042	713-975-7590	713-975-9029
Hawkins Filtration Products Inc. 1401 W. Detroit Broken Arrow, OK 74012 www.westernfilterco.com	918-258-5528	918-258-5520
HOAD Inc. P. O. Box 168 Ft. Lipton, CO 80621	303-857-0956	303-857-9415
Holloman Corporation 5257 W. I-20, P.O. Box 69410 Odessa, TX 79768	432-381-2000	432-381-6200
HPF Consultants, Inc. 601 No. Marienfeld, Suite 107 Midland, TX 79701 www.hpfconsultants.com	432-685-4143	432-685-4145
HPT Inc. 6202 So. Lewis, Suite N Tulsa, OK 74136	918-749-9993	918-745-2471
HT Engineering, Inc. 802 Merritt St. SE Grand Rapids, MI 49507-3398 www.htengineering.com	616-452-3279	616-452-3290
Hudson Products Corporation 1307 Soldiers Field Sugar Land, TX 77479 www.hudsonproducts.com	281-275-8100	281-275-8211
Huntsman Corporation 3040 Post Oak Blvd. Houston, TX 77056 www.huntsmangastreating.com	713-235-6000	713-235-6977
Huzyk Energy Management, Inc. 2118 So. Milwaukee St. Denver, CO 80210 www.huzykenergy.com	303-692-9113	303-692-8992
Hy-Bon Engineering Company, Inc. 2404 Commerce Drive Midland, TX 79704 www.hy-bon.com	432-697-2292	432-697-2310
Hydrocarbon Technology Engineering P.O. Box 7347 Grand Rapids, MI 49510-7347 www.htengineering.com	616-452-3279	616-452-3290
Ignition Systems & Controls, LP P. O. Box 60372 Midland, TX 79711 www.ignition-systems.com	432-697-6472	432-697-0563
INEOS Oxide 2925 Briarpark Dr., Suite 870 Houston, TX 77042 www.gastreating.com/	713-243-6200	713-243-6220

Company & Address	Phone	Fax
Ingenieros Consultores y Asociados, CA Edif. Residencias Las Americas, Local No. 4, Calle Cecilio Acosta entre Av. Santa Rita y Bellas Vista Maracaibo, Venezuela www.gas-training.com	613-823-4683	—
Inspectorate America Corporation 131 No. Pasadena Blvd. Pasadena, TX 77506	713-477-1567	713-477-4032
Intertek Caleb Brett 2200 W. Loop So. Houston, TX 77027 www.itscb.com	713-407-3600	713-407-3612
Invensys Foxboro 33 Commercial St. Foxboro, MA 02035-2099 www.foxboro.com	866-746-6477	508-549-4999
IPSI LLC P. O. Box 2166 Houston, TX 77252-2166 www.ipsi.com	713-235-2400	713-235-1612
J-W Measurement Company 20612 So. Hwy. 75 Mounds, OK 74047 www.metrongas.com	918-827-5770	918-827-5773
J-W Operating Company (J-W Power Co., Compression Services; J-W Measurement Co., Measurement Services) P. O. Box 226406 Dallas, TX 75222 www.jwoperating.com	972-233-8191	972-991-0704
J. W. Williams, Inc. P. O. Box 2106 Casper, WY 82602 www.jwwilliams-flint.com	307-237-8345	307-234-1530
Jacobs Engineering Group Inc. 5995 Rogerdale Rd. Houston, TX 77072	832-351-6000	832-351-7701
Jet Specialty 1208-A North Council Rd. Oklahoma City, OK 73127	405-789-5260	405-499-9840
JFE Engineering Corporation 2-1, Suehiro-cho, Tsurumi-Ku Yokohama 230-8611, Japan www.jfe-eng.co.jp	81-45-505-7772	81-45-505-8941
JGC Corporation 2-3-1 Minato Mirai, Nishi-ku Yokohama 220-6001 Japan 10370 Richmond Ave., Suite 800 Houston, TX 77024, USA www.jgc.co.jp	81-45-682-1111 713-789-1441	81-45-682-1112 713-789-1348
JHF Safety Consulting LLC P. O. Box 1725 Brownwood, TX 76804 jhfsafetyconsultingllc@hotmail.com	915-784-8540	—
John M. Campbell & Company 1215 Crossroads Blvd. Norman, OK 73072 www.jmcampbell.com	405-321-1383	405-321-4533
Johnson Filtration Products, Inc. P. O. Box 30010 Amarillo, TX 79120-0010 www.johnsonfiltration.com	806-371-8033	806-372-5257
Johnson Matthey Catalysts (formerly Synetix) 1100 Hercules Ave., Suite 200 Houston, TX 77058-2759 www.jmcatalysts.com	713-528-8064	713-528-8103

Company & Address	Phone	Fax
Kams, Inc. 1831 NW 4th Dr. Oklahoma City, OK 73106 www.kamsinc.com	405-232-2636, 800-228-KAMS	405-232-3107
Kane Environmental Engineering, Inc. 5307 Oakdale Creek Court Spring, TX 77379	281-370-6580	281-379-3935
KBR 601 Jefferson Ave. Houston, TX 77002-7990 P. O. Box 3 Houston, TX 77001-0003 www.kbr.com	713-753-2000	713-753-3877
Kimray, Inc. P. O. Box 18949, 52 NW 42nd Oklahoma City, OK 73154 www.kimray.com	405-525-6601	405-525-7520
KnightHawk Engineering 17625 El Camino Real, Suite 412 Houston, TX 77058 www.knighthawk.com	281-282-9200	281-282-9333
Koch-Glitsch LP 4111 E. 37th No. Wichita, KS 67220-3203 www.kochglitsch.com	316-828-5110	316-828-5263
Krause, Inc. Engineers - Architects 10 So. Briar Hollow Lane, Suite 93 Houston, TX 77027	713-552-1200	713-552-1201
Krueger Engineering & Mfg. Co., Inc. P. O. Box 11308 Houston, TX 77293-1308 www.kemco.net	281-442-2537	281-442-6668
Kvaerner Process Systems US 7909 Parkwood Circle, 6th Flr. Houston, TX 77036	281-820-1171	281-820-1174
Linde BOC Process Plants LLC 8522 E. 61st St. Tulsa, OK 74133 www.lindebocpp.com	918-250-8522	918-250-6915
Loco Energy Company, LLC 1001 McKinney, Suite 520 Houston, TX 77002 www.locoenergy.com	713-655-9500	713-655-1281
Lomic, Inc. 100 N. Patterson, Suite 202 State College, PA 16801 www.lomic.com	814-238-5225	814-238-5315
Louisiana Chemical Equip. Co. LLC P. O. Box 1490 La Porte, TX 77572-1490	281-471-4900	281-471-2968
M & H Enterprises, Inc. 2900 Wilcrest, Suite 300 Houston, TX 77042	713-268-2193	713-974-0711
Mafi-Trench Corporation 3037 Industrial Parkway Santa Maria, CA 93455 www.mafi-trench.com	805-928-5757	805-925-3861
Manley Gas Testing, Inc. 120 Dock Road Odessa, TX 79762	432-367-3024	432-367-1166
Marlboro Enterprises, Inc. 5959 Shallowford Rd., Suite 511 Chattanooga, TN 37421-2240	423-308-3000	423-308-3040
Marsau Enterprises 1209 N. 30th Enid, OK 73701	580-233-3910	580-233-5063
Martin Energy Consultants P. O. Box 8064 The Woodlands, TX 77387	281-367-9401	281-367-0540

Company & Address	Phone	Fax
Master Corporation P. O. Box 831, Odessa, TX 79760-0831 4682 E. University, Suite A Odessa, TX 79762-8104 www.mastercorporation.com	432-550-2197	432-362-5166
Maxxam Analytics Inc. 9331 - 48 St Edmonton, AB, CANADA, T6B 2R4 www.maxxamanalytics.com	780-468-3500	780-468-3560
McJunkin Corporation P. O. Box 4395 Odessa, TX 79762 www.mcjunkin.com	432-332-8131	432-332-8132
Mechanical Equipment, Inc. 2525 E. I-20 Midland, TX 79701	432-687-0601	432-687-0810
Mid Continent Measurement Co. P. O. Box 49 Bristow, OK 74010	918-367-5517	918-367-9392
Miratech Corp. 4224 So. 76th E. Ave. Tulsa, OK 74145 www.miratechcorp.com	918-622-7077	918-663-5737
Mitsubishi Heavy Industries, Ltd 3-3-1, Minatomirai, Nishi-ku Yokohama 220-8401, JAPAN www.mhi.co.jp	045-224-9393	045-224-9948
Mobile Analytical Laboratories, Inc. P. O. Box 69210 Odessa, TX 79769 www.mobilelabs.com	432-337-4744	432-337-8781
Moore Control Systems, Inc. 1435 Katy Flewellen Katy, TX 77494 www.moore-control.com	281-392-7747	281-392-7727
Morgan Advanced Materials & Technology 1212 Milby Houston, TX 77023	713-224-9015	713-224-7527
MPR Services, Inc. 1201 FM 646 Dickinson, TX 77539-3014 www.mprserve.com	281-337-7424	281-337-6534
Multiphase Solutions, Inc. Two Park Ten, 16300 Katy Freeway, Suite 300 Houston, TX 77094 www.multiphase.com	281-646-1515	281-646-8700
Mustang Engineering, LP 16001 Park Ten Place Houston, TX 77084 www.mustangeng.com	713-215-8000	713-215-8506
Myers-Aubrey Co. 7477 E. 46th Pl. Tulsa, OK 74145	918-622-3500	918-628-0349
NATCO Group Inc. 2950 No. Loop W., Suite 750 Houston, TX 77092 www.natcogroup.com	713-683-9292	713-683-6768
National Petroleum & Energy Services, Inc. 105A W. Washington St. Rockwall, TX 75087 www.npesi.com	972-463-8225	972-463-8226
Natural Gas Liquids, Inc. 1415 Eldridge, #617 Houston, TX 77077 www.ngliquids.com	281-759-4700	281-759-4898
Nicholas Consulting Group, Inc. 600 No. Marienfeld, Suite 390 Midland, TX 79701 www.thencg.com	437-570-8093	432-683-1993

Company & Address	Phone	Fax
Nicol & Associates, Inc. 331 Melrose Dr., Suite 121 Richardson, TX 75080 www.nicolandassoc.com	972-437-9136	972-437-5443
Nomis Venture, LLC 7722 E. 102nd St. Tulsa, OK 74133 www.nomis.com	918-369-5773	918-369-5773
NORIT Americas Inc. 5775 Peachtree Dunwoody Rd., Building C, Suite 250 Atlanta, GA 30342 www.norit-americas.com	404-256-6150	404-256-6199
Nowata Filtration, Division of NMW, Inc. P.O. Box 678 Nowata, OK 74048 www.nowata.com	800-259-2204	918-273-2101
Oilphase - DBR 9419 - 20 Ave. Edmonton, AB, T6N 1E5, Canada www.oilphase-dbr.com	780-463-8638	780-450-1668
ONDEO Nalco Energy Services, L.P. 2307 Quarterpath Dr. Richmond, TX 77469	281-263-7716	281-263-7154
OPIS Energy Group 1255 Rte. 70, Suite 32N Lakewood, NJ 08701	732-901-8800	732-901-9632
Optimized Gas Treating, Inc. 15638 Whitewater Lane Houston, TX 77079 www.ogtrt.com	281-496-2729	281-496-2729
Optimized Pipeline Solutions, Inc. 1220 W. Cleburne Rd. Crowley, TX 76036 www.ops-services.com	817-297-3811	817-297-2859
Optimized Process Designs 25610 Clay Rd. Katy, TX 77493 www.opd-inc.com	281-371-7500	281-371-0132
Optimized Process Furnaces 3995 So. Santa Fe Chanute, KS 66720 www.firedheater.com	620-431-1260	620-431-6631
Orbit Valve Co. P. O. Box 193520 Little Rock, AR 72219-3520 7200 Interstate 30 Little Rock, AR 72209 www.orbitvalve.com	501-568-6000, 800-643-6544	501-570-5700
Ormat Technologies, Inc. 980 Greg Street Sparks, NV 87431 www.ormat.com	775-356-9029	775-356-9039
Ortloff Engineers, Ltd. 415 W. Wall, Suite 2000 Midland, TX 79701 www.ortloff.com	432-685-0277	432-685-0258
Pantechs Laboratories, Inc. P. O. Box 64489 Lubbock, TX 79464-4489 www.pantechs.com	800-687-6346	806-797-4474
Paragon Engineering Services, Inc. 10777 Clay Rd. Houston, Texas 77041-5497 www.paraengr.com	713-570-1000	713-570-8922
Parker Hannifin Corporation Finite Filter Operation 500 Glaspie St. Oxford, MI 48371 www.finitefilter.com	800-521-4357	248-628-1850

Company & Address	Phone	Fax
Parsons Energy & Chemicals Group Inc. 125 W. Huntington Dr. Arcadia, CA 91007 www.parsonsec.com	626-294-3582	626-294-3311
Pasadyn, Inc. 4411 Bluebonnet Dr., Suite 103 Stafford, TX 77477 www.pasadyn.com	281-240-7404	281-240-7409
Pearl Development Company 460 Park County Rd. 43 Bailey, CO 80421 www.pearldc.com	303-838-8090	303-838-1630
Peerless Mfg. Co. 2819 Walnut Hill Lane Dallas, TX 75229 www.peerlessmfg.com	214-357-6181	214-351-0194
Perry Equipment Corporation P. O. Box 640 Mineral Wells, TX 76068 www.pecousa.com	800-877-7326, 940-325-2575	940-325-4622
Petroleum Extension Service (PETEX), The University of Texas at Austin One University Station, MC: R8100 Austin, TX 78712-1100 www.utexas.edu/cee/petex	512-471-3150, 903-984-8689	512-471-9410, 903-984-8483
Pioneer Pipe 1660 Lincoln, Suite 2300 Denver, CO 80264	303-824-2224	303-289-6381
Porous Media 4301 W. Davis Conroe, TX 77304 www.porous.com	936-788-1000	936-788-1220
Premier Measurement Services 19302 Allview Lane Houston, TX 77094	281-492-1002	281-492-0541
Prosernat Tour Framatome 92084 Paris La Defense Cedex, France www.prosernat.com	33-147-9601-80	33-147-9602-50
Puffer-Sweiven Co. P. O. Box 2000 Stafford, TX 77477	713-274-1873	713-274-6438
Q. B. Johnson Mfg., Inc. P. O. Box 95129 Oklahoma City, OK 73143	405-677-6676	405-670-3270
Q2 Technologies P. O. Box 2927 Conroe, TX 77305 www.q2technologies.com	936-588-2242	936-588-2298
Quadra Chemicals P. O. Box 12430 Ogden, UT 84412 www.quadrachemicals.com	801-392-5950	801-392-5951
Questar Energy Services 1210 D St. Rock Springs, WY 82901 www.questenergy.com	888-777-0262, 307-352-7292	307-352-7326
Quorum & Associates P.O. Box 1144 Bridgeport, TX 76426-1144 www.quorumandassociates.com	940-575-4951	940-575-4961
Quorum Business Solutions, Inc. 2929 Briarpark Dr., Suite 215 Houston, TX 77042 www.qbsol.com	713-430-8604	713-430-8699
R & R Engineering Co. Inc. P.O. Box 700005 Tulsa, OK 74170	918-252-2571	—

Company & Address	Phone	Fax
Randall & Dewey, Inc. 16800 Greenspoint Park Dr. Suite 300-S Houston, TX 77060 www.randew.com	281-774-2000	281-774-2050
Randall Gas Technologies - ABB Lummus Global Inc. 3010 Briarpark Houston, TX 77042 www.randallgastech.com	713-821-4100	713-821-3538
Ref-Chem L.P. P.O. Box 2588 Odessa, TX 79760 www.ref-chem.com	432-332-8531	432-332-3325
Regard Resources Co., Inc. 330 Marshall St., Suite 700 Shreveport, LA 71101	318-425-2533	318-425-1014
Rhine Ruhr Pty Ltd. 19-21 Industrial Dr. Sunshine, Victoria 3020, Australia www.rhineruhr.com.au	03-9300-5000	03-9300-5001
Rike Service, Inc. Box 13786 New Orleans, LA 70185	504-827-0161	504-822-7599
River City Engineering, Inc. 1202 E. 23rd St., Suite B Lawrence, KS 66046 www.rivercityeng.com	785-842-4783	785-842-1450
Robert L. Rowan & Associates, Inc. 3816 Dacoma St. Houston, TX 77092	713-681-5811	—
Rockwell Automation 1221 So. 11th St. Kingfisher, OK 73750	405-375-4970	—
Rolls-Royce Energy Business 105 No. Sandusky St. Mount Vernon, OH 43050 www.rolls-royce.com	740-393-8888	740-393-8336
Rotor-Tech, Inc. 10613 Stebbins Circle Houston, TX 77043 www.rotor-tech.com	713-984-8900	713-984-9425
Rouly, Inc. 1506 W. Broadway Pl. Hobbs, NM 88240	505-393-4254	505-393-1886
Royal Filter Manufacturing Co., Inc. 4327 South 4th St. Chickasha, OK 73018 www.royalfilter.com	800-256-2559	405-224-9174
RW Beck Inc. 1801 California St., Suite 2800 Denver, CO 80202 www.rwbeck.com	303-299-5216	303-297-2811
RSC International 11931 Wickchester, Suite 201 Houston, TX 77043 www.rsc-gc.com	281-531-0001	281-531-0011
S & B Engineers and Constructors 7825 Park Pl. Blvd Houston, TX 77087 www.sbec.com	713-845-4345, 713-645-4141	713-645-4240
S-Con, Inc. 2925 FM 1960 E. Humble, TX 77338 www.sconinc.com	281-540-7266	281-540-1568
Saulsbury Industries 5308 Andrews Hwy. Odessa, TX 79762 www.si-tx.com	432-366-3686	432-368-0081

Company & Address	Phone	Fax
SCFM Compression Systems Co. 3701 So. Maybelle Ave. Tulsa, OK 74107-5708 www.scfm.com	918-663-1309	918-663-6140
Scott Specialty Gases 9810 Bay Area Blvd. Pasadena, TX 77507	281-909-3105	281-474-2127
Select Engineering, Inc. 324 So. Main, Suite 510 Tulsa, OK 74103-3679 www.select-engineering.com	918-592-1133	918-592-1134
Separation Systems, Inc. 100A Nightingale Lane Gulf Breeze, FL 32561	904-932-1433	904-934-8642
SGS Minerals Services (formerly Commercial Testing & Engineering) 1212 No. 39th St., Suite 323 Tampa, FL 33605 www.sgs.com	813-248-6566	813-247-2562
Shamrock Gas Analysis 1100 So. Madden Shamrock, TX 79079	806-256-3249	806-256-3159
Sherry Laboratories/LA 2129 W. Willow St. Scott, LA 70583 www.sherrylabs.com	337-232-3568	337-232-3621
Siemens Demag Delaval 840 Nottingham Way Trenton, NJ 08638 www.pg.siemens.com	609-890-5000	609-890-9180
Simms Machinery International Inc. 2035 No. Preisker Lane, Unit C Santa Maria, CA 93454	805-349-2540	805-349-9959
Sivalls, Inc. 2200 E. 2nd St. Odessa, TX 79761	915-337-3571	915-337-2624
SME Associates 11211 Katy Freeway, Suite 380 Houston, TX 77079	713-932-7611	713-932-7623
Smithco Engineering, Inc. 6312 So. 39th W. Ave. Tulsa, OK 74132 www.smithco-eng.com	918-446-4406	918-445-2857
Solar Turbines, Incorporated 13105 NW Freeway, Suite 400 Houston, TX 77040 www.solarturbines.com	713-895-2300	713-895-4270
SolArc, Inc. 320 So. Boston Ave., Suite 600 Tulsa, OK 74103 www.solarc.com	918-594-7320	918-594-7330
South-Tex Treaters, Inc. P. O. Box 60480 Midland, TX 79711 www.southtex.com	432-563-2766	432-563-1729
Southern Flow Companies P. O. Box 51475 Lafayette, LA 70505-1475	318-233-2066	318-233-0314
SPL, Inc. 8880 Interchange Dr. Houston, TX 77054 www.spl-inc.com	713-660-0901	713-660-6035
SulfaTreat 17998 Chesterfield Airport Rd. Suite 215 Chesterfield, MO 63005 www.sulfatreat.com	800-726-SOUR	636-532-2764

Company & Address	Phone	Fax
Sulzer Chemtech 4106 New W. Dr. Pasadena, TX 77507 4019 So. Jackson Tulsa, OK 74107 www.sulzerchemtech.com	281-604-4100 918-446-6672	281-291-0207 918-446-5321
Sundyne Corporation 14845 W. 64th Ave. Arvada, CO 80007 www.sundyne.com	303-425-0800	303-425-0896
Surface Production Systems 580 Westlake Park Blvd., Suite1501 Houston, TX 77079	281-589-1808	281-589-2638
T. F. Hudgins, Inc. 4405 Directors Row Houston, TX 77092 www.tfhudgins.com	713-682-3651	713-682-1109
Technip USA Corporation 1990 Post Oak Blvd., Suite 200 Houston, TX 77056 www.technip-coflexip.com	281-249-2300	281-249-2321
Technology Trade International, Inc. P. O. Box 821341 Houston, TX 77282-1341 www.tti-usa.com	281-920-0648	281-920-0638
TECNA ESTUDIOS Y PROYECTOS DE INGENIERIA SA Encarnacion Ezcurra 365, C1107CLA Buenos Aires, Argentina www.tecna.com	[54-11] 4347-0300	[54-11] 4347-0800
Texas Turbine Inc. 624 Profit Street Azle, TX 76020 www.txturbine.com	817-444-5528	817-444-3925
The ADEPT Group, Inc. 10866 Wilshire Blvd., Suite 350 Los Angeles, CA 90024 www.adept@adeptgroup.net/	310-441-4404	310-441-3001
The Arrington Corporation P. O. Box 131749 Tyler, TX 75713-1749 www.arringtoncompanies.com	903-894-6157	903-894-7428
The Hanover Company 12001 No. Houston Rosslyn Houston, TX 77086 www.hanover-co.com	800-950-8428	281-447-8790
The Lubrizol Corporation 29400 Lakeland Blvd. Wickliffe, OH 44092-2298 www.lubrizol.com	440-347-6721	440-347-6587
The Propane Market Strategy Letter P. O. Box 691976 Houston, TX 77269-1976 www.thepropaneletter.com	281-583-0656	281-583-0656
Thermo Electron Cooperation 2215 Grand Avenue Pkwy Austin, TX 78728	512-251-1400, 512-251-1597	—
Third Coast Terminals 1871 Mykawa Pearland, TX 77581 www.3cterminals.com	281-412-0275	281-412-0073
Thomas Petroleum Ltd. P. O. Box 1876 Victoria, TX 77902 www.thomaspetro.com	361-573-7662, Ext. 122	928-395-8374
Thomas Russell Co. 7050 So. Yale, Suite 210 Tulsa, OK 74136 www.thomasrussellco.com	918-481-5682	918-481-7427

Company & Address	Phone	Fax
Thomason Mechanical Corp. 2150 E. 37th St. Vernon, CA 90058 www.thomasonmech.com	800-639-3523	310-639-8217
Thurmond-McGlothlin Inc. P. O. Box 806 Woodward, OK 73802 www.tm-ems.com	580-256-9849	580-256-5909
TIC-The Industrial Company Wyoming, Inc. 1474 Willer Drive Casper, WY 82604, P.O. Box 3800 Casper, WY 82602 www.tic-inc.com	307-235-9958	307-266-2053
Tomcej Engineering Inc. P. O. Box 1274 Station Main Edmonton, AB T5J 2M8, Canada www.tomcej.com	780-483-0248	780-483-0248
Toromont Process Systems, Inc. 10815 Telge Rd. Houston, TX 77095 www.toromontprocess.com	281-345-9300	281-345-7434
Total Energy Corp. P.O. Box 757 Croton Falls, NY 10519 www.totalenergy.com	914-276-0490	914-276-0229
Toyo Engineering Corporation 8-1 Akanehama 2-chome Narashino, Chiba, 275-0024 Japan www.toyo-eng.co.jp	47-454-1113	47-454-1160
Trinity Industries, Inc. P. O. Box 568887 Dallas, TX 75356-8887 www.trinitylpg.com	888-558-8529	214-589-8553
Tru-Tec Services Inc. 11005 W. Fairmont Parkway LaPorte, TX 77571 www.tru-tec.com	281-471-8970	281-471-4871
Turnbow Engineering P. O. Box 1604 Bartlesville, OK 74005	918-333-8475	918-331-9639
Unichem, A Div. of BJ Services 707 N. Leech, POB 1499 Hobbs, NM 88240	505-393-7751	505-393-0377
United/Wells P. O. Box 4575 Odessa, TX 79760	432-362-2361	432-381-5000
Univar USA, Inc. 777 Brisbane St. Houston, TX 77061 www.univarusa.com	713-644-1601	713-664-3171
Universal Compression 4444 Brittmore Road Houston, TX 77041 www.universalcompression.com	713-335-7000	713-335-7771
UOP LLC 13105 NW Frwy, Suite 600 Houston, TX 77040 www.uop.com	713-744-2860	713-744-2881
Valve Maintenance Corporation 2234 No. FM 1936 Odessa, TX 79763	432-381-3221	432-381-4010
Vanco Engineering Co. 7033 E. 40 Tulsa, OK 74145	918-627-1920	918-627-6742
Vanson Engineering Co. 1240 No. Van Buren St., Suite 212 Anaheim, CA 92807	714-630-3344	714-630-0384
Veco Rocky Mountain, Inc. 9000 E. Nichols Ave., Suite 250 Englewood, CO 80112 www.veco.com	303-792-2211	303-792-2212
Vera & Associates 8327 S. 76th E. Ave. Tulsa, OK 74133	918-254-1422	918-252-9150
Vinson Process Controls 1432 Wainwright Way Carrollton, TX 75007 www.vppco.com	972-389-5700	888-201-6518
W. H. Linder & Associate Inc. 3330 W. Esplanade Ave. So., Suite 300 Metairie, LA 70002 www.whlinder.com	504-835-2577	504-837-5924
W. L. Hamilton Engineering P.C. 1949 Sugarland Dr., Suite 134 Sheridan, WY 82801	307-672-0743	307-672-5118
Walco Recycling Services LLC P. O. Box 5270 Houston, TX 77262	713-926-9277	713-926-9342
Washington Group International, Inc. 7800 E. Union Ave., Suite 100 Denver, CO 80237 www.wgint.com	303-843-2000	303-843-2008
Wasson-ECE Instrumentation 101 Rome Court Ft. Collins, CO 80524 www.wasson-ece.com	970-221-9179	970-221-9364
Waukesha Engine 1000 W. St. Paul Ave. Waukesha, WI 53188 www.waukeshaengine.dresser.com	281-775-4000	281-775-4010
Waukesha-Pearce Industries, Inc. 12320 So. Main Houston, TX 77035 www.wpi.com	713-723-1050	713-551-0799
Welker Engineering Co. P. O. Box 138 Sugar Land, TX 77478-0138 www.welkereng.com	281-491-2331	281-491-8344
Western Filter Co., Inc. 8330 No. County Rd. W. Odessa, TX 79764 www.westernfilterco.com	432-550-9006	432-550-9007
Westfield Engineering & Services, Inc. 8310 McHard Rd. Houston, TX 77053 www.westfieldengineering.com	281-438-2047	281-438-0459
Winn-Marion Barber, LLP 2009 So. Cherokee St. Denver, CO 80223 www.winn-marion.com	303-778-6767	303-733-9836
WinSim Inc. P. O. Box 1885 Houston, TX 77251 13333 SW Fwy, Suite 130 Sugar Land TX 77478 www.winsim.com	281-565-6700	281-565-7593
Yokogawa Corporation of America 5010 Wright Rd., Suite 100 Stafford, TX 77477 www.us.yokogawa.com	281-340-3868	281-340-3838
York Process Systems 5692 E. Houston St. San Antonio, TX 78220 www.york.com	210-661-9191 Ext. 235	210-662-6591

Classification of Members

Gas Processors Suppliers Association

6526 East 60th Street
Tulsa, Oklahoma 74145
Phone: 918-493-3872
Fax: 918-493-3875
email: gpsa@gasprocessors.com

SERVICES

The following is a listing of GPSA member companies classified by the type of services that they provide to the industry.

ADVANCED PROCESS CONTROL

Aker Kvaerner, Inc.
Aspen Technology, Inc.
Barry D. Payne & Associates, Inc.
BCCK Engineering, Inc.
BE&K Construction - Houston
CB&I Howe-Baker Process & Technology
Domain Engineering Inc.
Fluor Enterprises, Inc.
ForeRunner Corporation
FWMurphy
Ignition Systems & Controls, LP
Invensys Foxboro
KBR
KnightHawk Engineering
Marlboro Enterprises, Inc.
Master Corporation
Moore Control Systems, Inc.
Mustang Engineering, LP
NATCO Group Inc.
Nicholas Consulting Group, Inc.
Pearl Development Company
Quorum & Associates
SCFM Compression Systems Co.
Thomas Russell Co.
Tru-Tec Services Inc.
W. L. Hamilton Engineering P.C.
Washington Group International, Inc.
Wasson-ECE Instrumentation
Yokogawa Corporation of America

AMINE CLEANING

MPR Services, Inc.

ANALYTICAL LABORATORIES

American Measurement Services
Atofina Chemicals, Inc.
Coastal Flow Measurement, Inc.
DCG Partnership 1, Ltd.
Engelhard Corporation
Fesco Ltd.
Gas Analytical Solutions, Inc.
Graves Analytical Services LLC
Inspectorate America Corporation
Intertek Caleb Brett
J-W Measurement Company
Jet Specialty
Manley Gas Testing, Inc.
Maxxam Analytics Inc.
Mobile Analytical Laboratories, Inc.
MPR Services, Inc.
Pantechs Laboratories, Inc.
Porous Media
Questar Energy Services
SGS Minerals Services
Sherry Laboratories/LA
SPL, Inc.
The Lubrizol Corporation
Thurmond-McGlothlin Inc.
Wasson-ECE Instrumentation

AUDITS

Martin Energy Consultants
SPL, Inc.

CIVIL/STRUCTURAL CONSTRUCTION

Aker Kvaerner, Inc.
BE&K Construction - Houston
Bowden Construction Co., Ltd.
CB&I Howe-Baker Process & Technology
Elkhorn Construction, Inc.
Fluor Enterprises, Inc.
ForeRunner Corporation
Holloman Corporation
KBR

CIVIL/STRUCTURAL CONSTRUCTION (Cont'd.)

Linde BOC Process Plants LLC
Master Corporation
National Petroleum & Energy Services, Inc.
Nicholas Consulting Group, Inc.
Optimized Process Designs
Pasadyn, Inc.
Pearl Development Company
Ref-Chem L.P.
S & B Engineers and Constructors
Saulsbury Industries
Technology Trade International, Inc.
TIC-The Industrial Company Wyoming, Inc.
Washington Group International, Inc.
Westfield Engineering & Services, Inc.

COMPRESSOR FOUNDATION REPAIR

Bowden Construction Co., Ltd.
Energy Compression Systems
Exline, Inc.
GE Oil & Gas
Holloman Corporation
Master Corporation
Ref-Chem L.P.
SCFM Compression Systems Co.
Thomason Mechanical Corp.
United/Wells

COMPRESSOR RENTAL, LEASING, & CONTRACT O&M

Compressor Systems, Inc.
Energy Dynamics, Ltd. (EnDyn, Ltd.)
Energy Compression Systems
J-W Measurement Company
J-W Operating Company
Questar Energy Services
Rolls-Royce Energy Business
SCFM Compression Systems Co.
The Hanover Company
Universal Compression

COMPUTER SYSTEM CONSULTANTS
(for Software see Industry Software)

Barry D. Payne & Associates, Inc.
Dresser-Rand Company
Ellipsys, Inc.
Master Corporation
Moore Control Systems, Inc.
Mustang Engineering, LP
Quorum Business Solutions, Inc.

CONSULTANT

Entero Corporation
SCFM Compression Systems Co.

CORROSION CONSULTING

Aker Kvaerner, Inc.
Continental Products of Texas
Domain Engineering Inc.
Fluor Enterprises, Inc
HT Engineering, Inc.
Mustang Engineering, LP
National Petroleum & Energy Services, Inc.
Questar Energy Services
Quorum & Associates
Toyo Engineering Corporation

CRITICAL INCIDENT/EMERGENCY RESPONSE

Black & Veatch Pritchard, Inc.
Boots & Coots, Inc.
National Petroleum & Energy Services, Inc.
Quorum & Associates

DEHYDROGENATION SYSTEMS

Aker Kvaerner, Inc.
CB&I Howe-Baker Process & Technology
Fluor Enterprises, Inc.
Pearl Development Company
Ref-Chem L.P.
Westfield Engineering & Services, Inc.

DISMANTLING

Bowden Construction Co., Ltd.
Domain Engineering Inc.
Fluor Enterprises, Inc.
Gulf Coast Dismantling
Holloman Corporation
Marlboro Enterprises, Inc.
Marsau Enterprises
Master Corporation
Optimized Process Designs
Pearl Development Company
Quorum & Associates
Ref-Chem L.P.
Rouly, Inc.
S-Con, Inc.
Technology Trade International, Inc.
United/Wells
Walco Recycling Services LLC
Washington Group International, Inc.

DRAFTING

Aker Kvaerner, Inc.
Albert Garaudy and Associates, Inc.
BCCK Engineering, Inc.
BE&K Construction - Houston
Black & Veatch Pritchard, Inc.
CB&I Howe-Baker Process & Technology
Domain Engineering Inc.
Fluor Enterprises, Inc.
ForeRunner Corporation

DRAFTING (Cont'd.)

Gas Packagers, Inc.
GE Oil & Gas
Gulsby Engineering, Inc.
Harris Group Inc.
HPF Consultants, Inc.
HPT Inc.
KnightHawk Engineering
Marlboro Enterprises, Inc.
Master Corporation
Moore Control Systems, Inc.
Mustang Engineering, LP
Natural Gas Liquids, Inc.
Nicholas Consulting Group, Inc.
Nicol & Associates, Inc.
Pasadyn, Inc.
Pearl Development Company
Ref-Chem L.P.
S-Con, Inc.
Saulsbury Industries
Vanson Engineering Co.
Vera & Associates
W. L. Hamilton Engineering P.C.
Washington Group International, Inc.

E-COMMERCE

eLynx Technologies, LLC
Toyo Engineering Corporation

EMISSIONS TESTING

Mechanical Equipment, Inc.

ENGINEERING & DESIGN

Aggreko LLC
Air Products and Chemicals, Inc.
Aker Kvaerner, Inc.
Albert Garaudy and Associates, Inc.
Atofina Chemicals, Inc.
Barry D. Payne & Associates, Inc.
BCCK Engineering, Inc.
BE&K Construction - Houston
Black & Veatch Pritchard, Inc.
CB&I Howe-Baker Process & Technology
Chandler Engineering Company, LLC
Chiyoda Corporation
Compressor Systems, Inc.
Continental Products of Texas
CrystaTech, Inc.
Domain Engineering Inc.
Ellipsys, Inc.
Engelhard Corporation
EPC, Inc.
Fairfield Energy Consultants
Fluor Enterprises, Inc.
Ford, Bacon & Davis
ForeRunner Corporation
Foster Wheeler USA Corporation
Gas Packagers, Inc.
Gas Technology Corporation
Gas Technology Products LLC
GE Oil & Gas
GPM Solutions, Inc.
Gulsby Engineering, Inc.
Harris Group Inc.
Holloman Corporation
HPF Consultants, Inc.
HPT Inc.
HT Engineering, Inc.
Huzyk Energy Management, Inc.
IPSI LLC
J. W. Williams, Inc.
Jacobs Engineering Group Inc.
JFE Engineering Corporation
JGC Corporation
Kams, Inc.
KBR
KnightHawk Engineering
Krause, Inc. Engineers - Architects
Linde BOC Process Plants LLC
Marlboro Enterprises, Inc.
Martin Energy Consultants
Master Corporation
Miratech Corp.
Mitsubishi Heavy Industries, Ltd.
Moore Control Systems, Inc.
Mustang Engineering, LP
National Petroleum & Energy Services, Inc.
Natural Gas Liquids, Inc.
Nicholas Consulting Group, Inc.
Nicol & Associates, Inc.
Optimized Process Designs
Ortloff Engineers, Ltd.
Parsons Energy & Chemicals Group Inc.
Pasadyn, Inc.
Pearl Development Company
Peerless Mfg. Co.
Porous Media
Prosernat
Quorum & Associates
R & R Engineering Co. Inc.
Randall Gas Technologies - ABB Lummus Global Inc.
Ref-Chem L.P.
River City Engineering, Inc.
Rouly, Inc.
S & B Engineers and Constructors
SCFM Compression Systems Co.
S-Con, Inc.
Saulsbury Industries
Select Engineering, Inc.
Technip USA Corporation
Technology Trade International, Inc.
TECNA ESTUDIOS Y PROYECTOS DE INGENIERIA SA
The Arrington Corporation
Thomas Russell Co.
Toyo Engineering Corporation

ENGINEERING & DESIGN (Cont'd.)

UOP LLC
Vanson Engineering Co.
Vera & Associates
W. H. Linder & Associate Inc.
W. L. Hamilton Engineering P.C.
Washington Group International, Inc.
Wasson-ECE Instrumentation
Welker Engineering Co.
Westfield Engineering & Services, Inc.
Zeochem, LLC

ENGINEERING CONSULTANTS

Air Products and Chemicals, Inc.
Aker Kvaerner, Inc.
Albert Garaudy and Associates, Inc.
Barry D. Payne & Associates, Inc.
BCCK Engineering, Inc.
BE&K Construction - Houston
Black & Veatch Pritchard, Inc.
Boots & Coots, Inc.
Bryan Research & Engineering, Inc.
CB&I Howe-Baker Process & Technology
Compressor Systems, Inc.
CrystaTech, Inc.
Domain Engineering Inc.
Ellipsys, Inc.
Fairfield Energy Consultants
FESCO Ltd.
Fluor Enterprises, Inc.
ForeRunner Corporation
Foster Wheeler USA Corporation
GE Oil & Gas
GPM Solutions, Inc.
Gulsby Engineering, Inc.
H. J. Baker, P.E.
HPF Consultants, Inc.
HPT Inc.
HT Engineering, Inc.
Huzyk Energy Management, Inc.
IPSI LLC
Jacobs Engineering Group Inc.
JGC Corporation
John M. Campbell & Company
KBR
KnightHawk Engineering
Krause, Inc. Engineers - Architects
Lomic, Inc.
Marlboro Enterprises, Inc.
Martin Energy Consultants
Master Corporation
Mustang Engineering, LP
Natural Gas Liquids, Inc.
Nicholas Consulting Group, Inc.
Nicol & Associates, Inc.
Nomis Venture, LLC
Optimized Process Designs
Ortloff Engineers, Ltd.
Paragon Engineering Services, Inc.
Parsons Energy & Chemicals Group Inc.
Pasadyn, Inc.
Pearl Development Company
Prosernat
Quadra Chemicals
Quorum & Associates
Randall Gas Technologies - ABB Lummus Global Inc.
Ref-Chem L.P.
River City Engineering, Inc.
Rouly, Inc.
RW Beck Inc.
Select Engineering, Inc.
Simms Machinery International Inc.
Technip USA Corporation
Technology Trade International, Inc.
TECNA ESTUDIOS Y PROYECTOS DE INGENIERIA SA
The Arrington Corporation
Tomcej Engineering Inc.
Tru-Tec Services Inc.
Turnbow Engineering
Vanson Engineering Co.
Vera & Associates
W. H. Linder & Associate Inc.
W. L. Hamilton Engineering P.C.
Washington Group International, Inc.
Westfield Engineering & Services, Inc.

ENGINEERING, PROCUREMENT & CONSTRUCTION

Air Products and Chemicals, Inc.
Aker Kvaerner, Inc.
Barry D. Payne & Associates, Inc.
BCCK Engineering, Inc.
BE&K Construction - Houston
Black & Veatch Pritchard, Inc.
CB&I Howe-Baker Process & Technology
Chiyoda Corporation
CLOUGH Limited
Domain Engineering Inc.
Elkhorn Construction, Inc.
EPC, Inc.
Fluor Enterprises, Inc.
Ford, Bacon & Davis
ForeRunner Corporation
Foster Wheeler USA Corporation
Gas Technology Corporation
Gulsby Engineering, Inc.
Holloman Corporation
HPT Inc.
Huzyk Energy Management, Inc.
Jacobs Engineering Group Inc.
JFE Engineering Corporation
JGC Corporation
KBR
KnightHawk Engineering
Krause, Inc. Engineers - Architects
Linde BOC Process Plants LLC

ENGINEERING PROCUREMENT & CONSTRUCTION (Cont'd.)

Marlboro Enterprises, Inc.
Master Corporation
Mitsubishi Heavy Industries, Ltd.
Mustang Engineering, LP
National Petroleum & Energy Services, Inc.
Natural Gas Liquids, Inc.
Nicholas Consulting Group, Inc.
Nicol & Associates, Inc.
Optimized Pipeline Solutions, Inc.
Optimized Process Designs
Parsons Energy & Chemicals Group Inc.
Pasadyn, Inc.
Pearl Development Company
Quorum & Associates
Ref-Chem L.P.
Rouly, Inc.
S & B Engineers and Constructors
S-Con, Inc.
Saulsbury Industries
Select Engineering, Inc.
Technip USA Corporation
Technology Trade International, Inc.
TECNA ESTUDIOS Y PROYECTOS DE INGENIERIA SA
The Hanover Company
Thomas Russell Co.
TIC-The Industrial Company Wyoming, Inc.
Toyo Engineering Corporation
United/Wells
Vanson Engineering Co.
W. H. Linder & Associate Inc.
W. L. Hamilton Engineering P.C.
Washington Group International, Inc.
Westfield Engineering & Services, Inc.
ZAP Engineering & Construction Services, Inc.

ENVIRONMENTAL SERVICES

Aker Kvaerner, Inc.
Black & Veatch Pritchard, Inc.
C3 Resources
CAP-HIS Emissions Reduction Systems
CCR Technologies, Inc.
CrystaTech, Inc.
Fluor Enterprises, Inc.
HPT Inc.
Ignition Systems & Controls, LP
KBR
Miratech Corp.
National Petroleum & Energy Services, Inc.
Nicol & Associates, Inc.
Pantechs Laboratories, Inc.
Pearl Development Company
Questar Energy Services
Quorum & Associates
RW Beck Inc.
SGS Minerals Services
Sherry Laboratories/LA
SPL, Inc.
Technology Trade International, Inc.
The Arrington Corporation
Washington Group International, Inc.
Wasson-ECE Instrumentation

EXPANDER CRYOGENIC PROCESS SERVICES & TRAINING

Clayton Hamm, Cryogenic Specialist
GE Oil & Gas
HPT Inc.
Mafi-Trench Corporation
Ortloff Engineers, Ltd.
Simms Machinery International Inc.
Texas Turbine Inc.
Washington Group International, Inc.

EXPERT WITNESS

Fairfield Energy Consultants
Optimized Pipeline Solutions, Inc.
Quorum & Associates
SCFM Compression Systems Co.

FAILURE ANALYSIS/FORENSIC ENGINEERING

Exline, Inc.
Fluor Enterprises, Inc.
GE Oil & Gas
HT Engineering, Inc.
IPSI LLC
Kams, Inc.
KnightHawk Engineering

FCC OFFGAS RECOVERY

Air Products and Chemicals, Inc.
Black & Veatch Pritchard, Inc.
CB&I Howe-Baker Process & Technology
Domain Engineering Inc.
Fluor Enterprises, Inc.
Gulsby Engineering, Inc.
Linde BOC Process Plants LLC
Nomis Venture, LLC
Parsons Energy & Chemicals Group Inc.
Technip USA Corporation
Thomas Russell Co.
Tru-Tec Services Inc.
Washington Group International, Inc.

GAS & LIQUIDS PURIFICATION

Johnson Matthey Catalysts (formerly Synetix)

GAS COMPRESSING & PROCESSING

Air Products and Chemicals, Inc.
Ariel Corporation

GAS COMPRESSING & PROCESSING (Cont'd.)

BASF Corporation
BCCK Engineering, Inc.
BE&K Construction - Houston
Bexar Energy Holdings, Inc.
Bowden Construction Co., Ltd.
Cardinal Gas Services, LLC
CB&I Howe-Baker Process & Technology
CLOUGH Limited
Compressor Systems, Inc.
Domain Engineering Inc.
Dresser-Rand Company
Elliott Turbomachinery Co. Inc.
Energy Compression Systems
Fluor Enterprises, Inc.
Ford, Bacon & Davis
ForeRunner Corporation
Gas Packagers, Inc.
GE Oil & Gas
Gulsby Engineering, Inc.
HPT Inc.
Hy-Bon Engineering Company, Inc.
IPSI LLC
J-W Operating Company
Linde BOC Process Plants LLC
Loco Energy Company, LLC
Marlboro Enterprises, Inc.
Mitsubishi Heavy Industries, Ltd
National Petroleum & Energy Services, Inc.
Nicholas Consulting Group, Inc.
Optimized Process Designs
Ortloff Engineers, Ltd.
Parsons Energy & Chemicals Group Inc.
Pearl Development Company
Peerless Mfg. Co.
Prosernat
Quorum & Associates
Ref-Chem L.P.
Regard Resources Co., Inc.
Rolls-Royce Energy Business
RSC International
S & B Engineers and Constructors
SCFM Compression Systems Co.
S-Con, Inc.
Solar Turbines, Incorporated
South-Tex Treaters, Inc.
Technip USA Corporation
Technology Trade International, Inc.
The Hanover Company
Thomas Petroleum Ltd.
Thomas Russell Co.
United/Wells
Universal Compression
Vanson Engineering Co.
Vera & Associates
W. L. Hamilton Engineering P.C.
Washington Group International, Inc.
Westfield Engineering & Services, Inc.
York Process Systems

GAS CONTAMINATION TESTING

CrystaTech, Inc.
National Petroleum & Energy Services, Inc.
Pantechs Laboratories, Inc.
Perry Equipment Corporation
Porous Media
SPL, Inc.

GAS PLANT LEASING

BCCK Engineering, Inc.
Cardinal Gas Services, LLC
Dickson & Tryer Engineering Co., Ltd.
Gas Technology Corporation
Select Engineering, Inc.
South-Tex Treaters, Inc.
The Hanover Company
W. L. Hamilton Engineering P.C.

GAS TREATING

Washington Group International, Inc.

INDUSTRY RESEARCH

Aker Kvaerner, Inc.
Black & Veatch Pritchard, Inc.
CrystaTech, Inc.
IPSI LLC
KBR
Lomic, Inc.
Oilphase - DBR
Quorum & Associates
Randall & Dewey, Inc.

INSPECTION SERVICES

Aker Kvaerner, Inc.
BE&K Construction - Houston
HPF Consultants, Inc.
Hudson Products Corporation
Intertek Caleb Brett
J-W Measurement Company
KBR
Marlboro Enterprises, Inc.
Master Corporation
Moore Control Systems, Inc.
National Petroleum & Energy Services, Inc.
Natural Gas Liquids, Inc.
Nicholas Consulting Group, Inc.
Optimized Pipeline Solutions, Inc.
Pantechs Laboratories, Inc.
Parsons Energy & Chemicals Group Inc.
Quorum & Associates
Rouly, Inc.
SCFM Compression Systems Co.
SGS Minerals Services
SPL, Inc.
Technology Trade International, Inc.
Thurmond-McGlothlin Inc.

INSPECTION SERVICES (Cont'd.)

Tru-Tec Services Inc.
Washington Group International, Inc.

INSTRUMENT AND ELECTRICAL CONSTRUCTION

Barry D. Payne & Associates, Inc.
CB&I Howe-Baker Process & Technology
Chandler Engineering Company, LLC
Fluor Enterprises, Inc.
GE Oil & Gas
Ignition Systems & Controls, LP
Invensys Foxboro
Jet Specialty
KBR
Marlboro Enterprises, Inc.
Master Corporation
Moore Control Systems, Inc.
NATCO Group Inc.
Nicholas Consulting Group, Inc.
Optimized Process Designs
Pasadyn, Inc.
Pearl Development Company
Questar Energy Services
S & B Engineers and Constructors
S-Con, Inc.
Saulsbury Industries
Technip USA Corporation
Technology Trade International, Inc.
Thomas Russell Co.
TIC-The Industrial Company Wyoming, Inc.
Washington Group International, Inc.

INSULATION

Elkhorn Construction, Inc.
Fluor Enterprises, Inc.
Jet Specialty
KBR
Marlboro Enterprises, Inc.
National Petroleum & Energy Services, Inc.
Pasadyn, Inc.
Washington Group International, Inc.

INVESTMENT BANKING

Glaucon Capital Partners, LLC

LICENSED PROCESSES

Advanced Extraction Technologies, Inc.
Air Products and Chemicals, Inc.
Aker Kvaerner, Inc.
BASF Corporation
BCCK Engineering, Inc.
Black & Veatch Pritchard, Inc.
CB&I Howe-Baker Process & Technology
CCR Technologies, Inc.
CrystaTech, Inc.
Engelhard Corporation
Fluor Enterprises, Inc.
Ford, Bacon & Davis
Foster Wheeler USA Corporation
Gateway Energy Corpoartion
IPSI LLC
Jacobs Engineering Group Inc.
JGC Corporation
KBR
Krause, Inc. Engineers - Architects
Linde BOC Process Plants LLC
Master Corporation
MPR Services, Inc.
Ortloff Engineers, Ltd.
Parsons Energy & Chemicals Group Inc.
Porous Media
Prosernat
Randall Gas Technologies - ABB Lummus Global Inc.
South-Tex Treaters, Inc.
Technip USA Corporation
Toyo Engineering Corporation
UOP LLC
Washington Group International, Inc.
Westfield Engineering & Services, Inc.

LNG PROCESSES

Air Products and Chemicals, Inc.
Holloman Corporation
Marlboro Enterprises, Inc.
Ortloff Engineers, Ltd.

MACHINING & REPAIR

Afton Pumps, Inc.
Compressor Engineering Corporation
Elliott Turbomachinery Co. Inc.
Energy Dynamics, Ltd. (EnDyn, Ltd.)
Exline, Inc.
GE Oil & Gas
H & S Valve Inc.
Hy-Bon Engineering Company, Inc.
Jet Specialty
Kams, Inc.
Marsau Enterprises
National Petroleum & Energy Services, Inc.
Simms Machinery International Inc.
Texas Turbine Inc.
Thomason Mechanical Corp.
United/Wells
Universal Compression
Valve Maintenance Corporation

MEASUREMENT SERVICES

American Measurement Services
Atofina Chemicals, Inc.
Coastal Flow Measurement, Inc.
DCG Partnership 1, Ltd.
Daniel Measurement and Control

MEASUREMENT SERVICES (Cont'd.)

eLynx Technologies, LLC
Engelhard Corporation
Fesco Ltd.
Gas Analytical Solutions, Inc.
GE Oil & Gas
Graves Analytical Services LLC
Intertek Caleb Brett
J-W Measurement Company
J-W Operating Company
Jet Specialty
Pearl Development Company
Questar Energy Services
Quorum & Associates
Quorum Business Solutions, Inc.
SPL, Inc.
Technology Trade International, Inc.
Thurmond-McGlothlin Inc.
Turnbow Engineering
Winn-Marion Barber, LLP

MECHANICAL CONSTRUCTION

Aker Kvaerner, Inc.
BE&K Construction - Houston
Bowden Construction Co., Ltd.
CB&I Howe-Baker Process & Technology
Elkhorn Construction, Inc.
Fluor Enterprises, Inc.
ForeRunner Corporation
Foster Wheeler USA Corporation
Holloman Corporation
Jet Specialty
KBR
Linde BOC Process Plants LLC
Marlboro Enterprises, Inc.
Master Corporation
National Petroleum & Energy Services, Inc.
Nicholas Consulting Group, Inc.
Optimized Process Designs
Pasadyn, Inc.
Pearl Development Company
Ref-Chem L.P.
S & B Engineers and Constructors
Saulsbury Industries
South-Tex Treaters, Inc.
Technip USA Corporation
Technology Trade International, Inc.
TECNA ESTUDIOS Y PROYECTOS DE INGENIERIA SA
The Hanover Company
TIC-The Industrial Company Wyoming, Inc.
United/Wells
Washington Group International, Inc.
Westfield Engineering & Services, Inc.

NITROGEN REJECTION AND HELIUM RECOVERY TECHNOLOGY

Air Products and Chemicals, Inc.
Aker Kvaerner, Inc.
BCCK Engineering, Inc.
Black & Veatch Pritchard, Inc.
CB&I Howe-Baker Process & Technology
Domain Engineering Inc.
Engelhard Corporation
Gateway Energy Corpoartion
GE Oil & Gas
Gulsby Engineering, Inc.
HPT Inc.
IPSI LLC
Krause, Inc. Engineers - Architects
Linde BOC Process Plants LLC
Pasadyn, Inc.
Pearl Development Company
Randall Gas Technologies - ABB Lummus Global Inc.
Ref-Chem L.P.
Technip USA Corporation
Thomas Russell Co.
UOP LLC
Washington Group International, Inc.

OILFIELD SERVICES

Aggreko LLC
CB&I Howe-Baker Process & Technology
Coastal Chemical Co., LLC
eLynx Technologies, LLC
Energy Dynamics, Ltd. (EnDyn, Ltd.)
FESCO Ltd.
GE Oil & Gas
Graves Analytical Services LLC
Gulf Coast Chemical, Inc.
Jet Specialty
KBR
Marsau Enterprises
Master Corporation
NATCO Group Inc.
National Petroleum & Energy Services, Inc.
Nicholas Consulting Group, Inc.
Oilphase - DBR
Ref-Chem L.P.
Technology Trade International, Inc.
Washington Group International, Inc.

OPERATIONS & MAINTENANCE

Air Products and Chemicals, Inc.
Aker Kvaerner, Inc.
Baker Energy
CLOUGH Limited
Compressor Systems, Inc.
Dresser-Rand Company
Elliott Turbomachinery Co. Inc.
Ellipsys, Inc.
Energy Dynamics, Ltd. (EnDyn, Ltd.)
Energy Compression Systems
Exline, Inc.

OPERATIONS & MAINTENANCE (Cont'd.)

Fluor Enterprises, Inc.
ForeRunner Corporation
Foster Wheeler USA Corporation
GE Oil & Gas
Graves Analytical Services LLC
Jet Specialty
JHF Safety Consulting LLC
KBR
NATCO Group Inc.
National Petroleum & Energy Services, Inc.
Natural Gas Liquids, Inc.
Optimized Process Designs
Quorum & Associates
Ref-Chem L.P.
Rolls-Royce Energy Business
SCFM Compression Systems Co.
South-Tex Treaters, Inc.
Technology Trade International, Inc.
TECNA ESTUDIOS Y PROYECTOS DE INGENIERIA SA
The Arrington Corporation
The Hanover Company
TIC-The Industrial Company Wyoming, Inc.
Toyo Engineering Corporation
United/Wells

PAINTING

Bowden Construction Co., Ltd.
Elkhorn Construction, Inc.
Fluor Enterprises, Inc.
GE Oil & Gas
Marsau Enterprises
National Petroleum & Energy Services, Inc.

PERFORMANCE ANALYSIS

Air Products and Chemicals, Inc.
Aker Kvaerner, Inc.
Ariel Corporation
Atofina Chemicals, Inc.
BCCK Engineering, Inc.
CB&I Howe-Baker Process & Technology
Compressor Engineering Corporation
Domain Engineering Inc.
Exline, Inc.
Fisher Controls International Inc.
Fluor Enterprises, Inc.
GE Oil & Gas
GPM Solutions, Inc.
Gulsby Engineering, Inc.
Hudson Products Corporation
KBR
KnightHawk Engineering
Linde BOC Process Plants LLC
Marlboro Enterprises, Inc.
Martin Energy Consultants
Nomis Venture, LLC
Optimized Pipeline Solutions, Inc.
Ortloff Engineers, Ltd.
Pantechs Laboratories, Inc.
Pasadyn, Inc.
Pearl Development Company
Quorum & Associates
SCFM Compression Systems Co.
SGS Minerals Services
T. F. Hudgins, Inc.
The Arrington Corporation
The Hanover Company
The Lubrizol Corporation
Thomas Petroleum Ltd.
Thomas Russell Co.
Tru-Tec Services Inc.
Vanson Engineering Co.
W. L. Hamilton Engineering P.C.
Washington Group International, Inc.
Westfield Engineering & Services, Inc.

PIPELINE CONSTRUCTION

CB&I Howe-Baker Process & Technology
CLOUGH Limited
Fluor Enterprises, Inc.
ForeRunner Corporation
Gateway Energy Corpoartion
Holloman Corporation
HT Engineering, Inc.
KBR
Lomic, Inc.
Marsau Enterprises
Master Corporation
National Petroleum & Energy Services, Inc.
Nicholas Consulting Group, Inc.
Optimized Pipeline Solutions, Inc.
Pearl Development Company
Technology Trade International, Inc.

PIPELINE INSPECTION

Optimized Pipeline Solutions, Inc.

PIPELINE MAPS & DATA

CB&I Howe-Baker Process & Technology
Domain Engineering Inc.
Master Corporation
Mustang Engineering, LP
Nicholas Consulting Group, Inc.
Pearl Development Company

PROCUREMENT SERVICES

Aker Kvaerner, Inc.
BE&K Construction - Houston
Black & Veatch Pritchard, Inc.
Bowden Construction Co., Ltd.
CB&I Howe-Baker Process & Technology
Domain Engineering Inc.

PROCUREMENT SERVICES (Cont'd.)

Fluor Enterprises, Inc.
ForeRunner Corporation
Foster Wheeler USA Corporation
Harris Group Inc.
Jet Specialty
JGC Corporation
KBR
Marlboro Enterprises, Inc.
Master Corporation
Moore Control Systems, Inc.
Mustang Engineering, LP
National Petroleum & Energy Services, Inc.
Natural Gas Liquids, Inc.
Nicholas Consulting Group, Inc.
Optimized Process Designs
Pasadyn, Inc.
Pearl Development Company
Quorum & Associates
SCFM Compression Systems Co.
Technip USA Corporation
Technology Trade International, Inc.
Toyo Engineering Corporation
Vanson Engineering Co.
Washington Group International, Inc.
Westfield Engineering & Services, Inc.

PVT PHASE BEHAVIOR LAB. SERVICES

Chandler Engineering Company, LLC
Fesco Ltd.
Oilphase - DBR

SAFETY CONSULTANTS

Boots & Coots, Inc.
C3 Resources
Compressor Engineering Corporation
Domain Engineering Inc.
Elkhorn Construction, Inc.
IPSI LLC
JHF Safety Consulting LLC
KBR
Marlboro Enterprises, Inc.
Nomis Venture, LLC
Pearl Development Company
Quorum & Associates
Technip USA Corporation
TECNA ESTUDIOS Y PROYECTOS DE INGENIERIA SA
The Arrington Corporation
Washington Group International, Inc.

STRATEGY PLANNING

Aker Kvaerner, Inc.
Domain Engineering Inc.
Fluor Enterprises, Inc.
ForeRunner Corporation
GPM Solutions, Inc.
IPSI LLC
Martin Energy Consultants
Mustang Engineering, LP
National Petroleum & Energy Services, Inc.
Natural Gas Liquids, Inc.
Nomis Venture, LLC
Ortloff Engineers, Ltd.
Pearl Development Company
Quorum & Associates
Randall & Dewey, Inc.
SCFM Compression Systems Co.
The Propane Market Strategy Letter
Vanson Engineering Co.
Washington Group International, Inc.

SULFUR REMOVAL/RECOVERY

Washington Group International, Inc.

TECHNICAL PUBLICATIONS

Atofina Chemicals, Inc.
Foster Wheeler USA Corporation
IPSI LLC
John M. Campbell & Company
Ortloff Engineers, Ltd.
Petroleum Extension Service (PETEX), The
Prosernat
The Propane Market Strategy Letter
University of Texas at Austin

TRAINING

Air Products and Chemicals, Inc.
Atofina Chemicals, Inc.
Baker Energy
Barry D. Payne & Associates, Inc.
Boots & Coots, Inc.
C3 Resources
Compressor Engineering Corporation
Compressor Systems, Inc.
Domain Engineering Inc.
Drake Controls, LLC
Dresser-Rand Company
Ellipsys, Inc.
Exline, Inc.
Fisher Controls International Inc.
GE Oil & Gas
Graves Analytical Services LLC
IPSI LLC
Jet Specialty
JHF Safety Consulting LLC
John M. Campbell & Company
KBR
Lomic, Inc.
Marlboro Enterprises, Inc.
Miratech Corp.
Moore Control Systems, Inc.
NATCO Group Inc.
Natural Gas Liquids, Inc.

TRAINING (Cont'd.)

Ortloff Engineers, Ltd.
Pasadyn, Inc.
Pearl Development Company
Petroleum Extension Service (PETEX), The
Prosernat
Quorum & Associates
River City Engineering, Inc.
SCFM Compression Systems Co.
SPL, Inc.
T. F. Hudgins, Inc.
Technology Trade International, Inc.
The Arrington Corporation
The Hanover Company
Thomas Petroleum Ltd.
University of Texas at Austin
Vanson Engineering Co.
W. L. Hamilton Engineering P.C.
Washington Group International, Inc.
Welker Engineering Co.

UNDERGROUND STORAGE FACILITIES

Black & Veatch Pritchard, Inc.
Boots & Coots, Inc.
CB&I Howe-Baker Process & Technology
Domain Engineering Inc.
ForeRunner Corporation
Holloman Corporation
Marlboro Enterprises, Inc.
Master Corporation
SCFM Compression Systems Co.
Technip USA Corporation
Washington Group International, Inc.

Gas Processors Suppliers Association

6526 East 60th Street
Tulsa, Oklahoma 74145
Phone: 918-493-3872
Fax: 918-493-3875
email: gpsa@gasprocessors.com

SUPPLIES

The following is a listing of GPSA member companies classified by the type of services that they provide to the industry.

AIR COOLERS

air-x-changers
Air-x-hemphill
Amercool Manufacturing, Inc.
Bartlett Equipment Company, Inc.
Brice Equipment Company
Gulf Coast Dismantling
Hammco, Inc.
Hudson Products Corporation
KnightHawk Engineering
R & R Engineering Co. Inc.
Rouly, Inc.
Smithco Engineering, Inc.
South-Tex Treaters, Inc.

AMINE CLEANING EQUIPMENT

MPR Services, Inc.

AUTOMATION AND PROCESS CONTROLS

ABB Inc. – Totalflow
Barry D. Payne & Associates, Inc.
CB&I Howe-Baker Process & Technology
Control Microsystems
Drake Controls, LLC
eLynx Technologies, LLC
Energy Dynamics, Ltd. (EnDyn, Ltd.)
EPC, Inc.
FWMurphy
GE Oil & Gas
Ignition Systems & Controls, LP
Invensys Foxboro
Jet Specialty
Kimray, Inc.
KnightHawk Engineering
Miratech Corp.
Moore Control Systems, Inc.
NATCO Group Inc.
Peerless Mfg. Co.
Rolls-Royce Energy Business
Siemens Demag Delaval
TECNA ESTUDIOS Y PROYECTOS DE INGENIERIA SA
The Lubrizol Corporation
Wasson-ECE Instrumentation
Winn-Marion Barber, LLP
Yokogawa Corporation of America

BOILERS

Aggreko LLC
Bartlett Equipment Company, Inc.
Foster Wheeler USA Corporation
KnightHawk Engineering
Mitsubishi Heavy Industries, Ltd.
National Petroleum & Energy Services, Inc.
Rouly, Inc.

BUILDINGS

Elkhorn Construction, Inc.
Moore Control Systems, Inc.
National Petroleum & Energy Services, Inc.
Thurmond-McGlothlin Inc.

CHEMICALS/CATALYSTS/ MOLE SIEVES/ADSORBENTS

Alcoa World Chemicals, Adsorbents and Catalysts
Atofina Chemicals, Inc.
BASF Corporation
CAP-HIS Emissions Reduction Systems
CCR Technologies, Inc.
Coastal Chemical Co., LLC
Continental Products of Texas
Criterion Catalyst Company, LP
Engelhard Corporation
Gas Technology Products LLC
GRACE Davison Process Adsorbents
Gulf Coast Chemical, Inc.

CHEMICALS/CATALYSTS/ MOLE SIEVES/ADSORBENTS (Cont'd.)

Huntsman Corporation
INEOS Oxide
Jet Specialty
Miratech Corp.
MPR Services, Inc.
NORIT Americas Inc.
Q2 Technologies
Quadra Chemicals
SulfaTreat
The Lubrizol Corporation
Third Coast Terminals
Thomas Petroleum Ltd.
UOP LLC
Waukesha-Pearce Industries, Inc.
Western Filter Co., Inc.
Zeochem, LLC

CHROMATOGRAPH CALIBRATION STANDARDS

DCG Partnership 1, Ltd.
Daniel Measurement and Control
Jet Specialty
Sherry Laboratories/LA

COLD BOXES FOR GAS PROCESSING APPLICATIONS

Air Products and Chemicals, Inc.
BCCK Engineering, Inc.
CB&I Howe-Baker Process & Technology
Chart Heat Exchangers
Jet Specialty
Linde BOC Process Plants LLC
National Petroleum & Energy Services, Inc.

COMPRESSORS AND PARTS

Aggreko LLC
Ariel Corporation
Bexar Energy Holdings, Inc.
Compressor Engineering Corporation
Compressor Systems, Inc.
Cook Compressor Group
Drake Controls, LLC
Dresser-Rand Company
Elliott Turbomachinery Co. Inc.
Energy Dynamics, Ltd. (EnDyn, Ltd.)
Energy Compression Systems
Exline, Inc.
Gas Packagers, Inc.
GE Oil & Gas
Gulf Coast Dismantling
H & S Valve Inc.
Hawkins Filtration Products Inc.
Hy-Bon Engineering Company, Inc.
J-W Measurement Company
J-W Operating Company
Marsau Enterprises
Mitsubishi Heavy Industries, Ltd
Peerless Mfg. Co.
Rolls-Royce Energy Business
RSC International
SCFM Compression Systems Co.
Siemens Demag Delaval
Simms Machinery International Inc.
Solar Turbines, Incorporated
Sundyne Corporation
T. F. Hudgins, Inc.
The Hanover Company
Thomas Petroleum Ltd.
Toromont Process Systems, Inc.
Total Energy Corp.
United/Wells
Universal Compression
Valve Maintenance Corporation
Vanco Engineering Co.
Waukesha-Pearce Industries, Inc.
York Process Systems

CONTINGENCY PLANS & TRAINING

Aggreko LLC
Boots & Coots, Inc.
Domain Engineering Inc.
eSimulation, Inc.
Peerless Mfg. Co.

CONTROL VALVES/REGULATORS

Allesco
Bartlett Equipment Company, Inc.
Daniel Measurement and Control
Drake Controls, LLC
Fisher Controls International Inc.
GARZO, Incorporated
GE Oil & Gas
J-W Measurement Company
Jet Specialty
Kimray, Inc.
Marsau Enterprises
Miratech Corp.
Myers-Aubrey Co.
NATCO Group Inc.
Peerless Mfg. Co.
SCFM Compression Systems Co.
Vinson Process Controls
Welker Engineering Co.
Winn-Marion Barber, LLP

COOLING TOWERS

Aggreko LLC
Eaton Metal Products Company
Gulf Coast Dismantling
National Petroleum & Energy Services, Inc.
Rouly, Inc.

DEHYDRATION EQUIPMENT

Aggreko LLC
Air Products and Chemicals, Inc.
Alcoa World Chemicals, Adsorbents and Catalysts
CB&I Howe-Baker Process & Technology
Chart Heat Exchangers
Dickson & Tryer Engineering Co., Ltd.
Engelhard Corporation
Gas Technology Corporation
GasTech Engineering Corporation
GRACE Davison Process Adsorbents
Gulf Coast Dismantling
Hawkins Filtration Products Inc.
J. W. Williams, Inc.
Jet Specialty
Kimray, Inc.
Linde BOC Process Plants LLC
Marsau Enterprises
Mitsubishi Heavy Industries, Ltd
NATCO Group Inc.
Prosernat
Rhine Ruhr Pty Ltd.
Rotor-Tech, Inc.
Rouly, Inc.
Select Engineering, Inc.
TECNA ESTUDIOS Y PROYECTOS DE INGENIERIA SA
The Hanover Company
Thomas Russell Co.
Welker Engineering Co.
Westfield Engineering & Services, Inc.
Zeochem, LLC

ELECTRIC MOTORS

Gas Packagers, Inc.
GE Oil & Gas
Gulf Coast Dismantling
Siemens Demag Delaval
The Hanover Company

EMISSION CONTROL EQUIPMENT

Mechanical Equipment, Inc.

ENGINES & PARTS

Caterpillar, Inc. - Global Petroleum Group
Compressor Engineering Corporation
Cook Compressor Group
Drake Controls, LLC
Energy Dynamics, Ltd. (EnDyn, Ltd.)
Energy Compression Systems
Exline, Inc.
Gas Packagers, Inc.
Gulf Coast Dismantling
Hawkins Filtration Products Inc.
Ignition Systems & Controls, LP
Kams, Inc.
Marsau Enterprises
Mitsubishi Heavy Industries, Ltd
SCFM Compression Systems Co.
T. F. Hudgins, Inc.
The Hanover Company
Toromont Process Systems, Inc.
United/Wells
Universal Compression
Valve Maintenance Corporation
Waukesha Engine
Waukesha-Pearce Industries, Inc.
Western Filter Co., Inc.

FILTERS

3M Company
ACS Industries, LP
Allesco
Bartlett Equipment Company, Inc.
Coastal Chemical Co., LLC
Compressor Engineering Corporation
Continental Products of Texas
Dickson & Tryer Engineering Co., Ltd.
Energy Dynamics, Ltd. (EnDyn, Ltd.)
Hawkins Filtration Products Inc.
Jet Specialty
Johnson Filtration Products, Inc.
Marsau Enterprises
NATCO Group Inc.
Nowata Filtration, Division of NMW, Inc.
Parker Hannifin Corporation
Perry Equipment Corporation
Porous Media
Rotor-Tech, Inc.
Royal Filter Manufacturing Co., Inc.
SCFM Compression Systems Co.
South-Tex Treaters, Inc.
The Lubrizol Corporation
Waukesha-Pearce Industries, Inc.
Welker Engineering Co.
Western Filter Co., Inc.

FIRED HEATERS

CB&I Howe-Baker Process & Technology
Foster Wheeler USA Corporation
GasTech Engineering Corporation
Gulf Coast Dismantling
NATCO Group Inc.
National Petroleum & Energy Services, Inc.
Optimized Process Furnaces
Prosernat
Rouly, Inc.
South-Tex Treaters, Inc.
TECNA ESTUDIOS Y PROYECTOS DE INGENIERIA SA
The Hanover Company

FLARES

CB&I Howe-Baker Process & Technology
Gulf Coast Dismantling

FLARES (Cont'd.)

National Petroleum & Energy Services, Inc.
SCFM Compression Systems Co.
Total Energy Corp.

GAS FILTER SEPARATORS, COALESCERS

Brice Equipment Company

GAS PURIFYING MATERIALS

ACS Industries, LP
Alcoa World Chemicals, Adsorbents and Catalysts
BASF Corporation
CAP-HIS Emissions Reduction Systems
CB&I Howe-Baker Process & Technology
Coastal Chemical Co., LLC
Connelly-GPM, Inc.
Engelhard Corporation
Gas Technology Products LLC
Hawkins Filtration Products Inc.
INEOS Oxide
Jet Specialty
Porous Media
Quadra Chemicals
SulfaTreat
Thomas Petroleum Ltd.
UOP LLC
Zeochem, LLC

GENERATORS

Aggreko LLC
Caterpillar, Inc. - Global Petroleum Group
Drake Controls, LLC
GE Oil & Gas
Gulf Coast Dismantling
Marsau Enterprises
Mitsubishi Heavy Industries, Ltd.
Solar Turbines, Incorporated
The Hanover Company
Total Energy Corp.
Waukesha-Pearce Industries, Inc.

HEAT EXCHANGERS

Aggreko LLC
Air-x-hemphill
Amercool Manufacturing, Inc.
Bartlett Equipment Company, Inc.
BCCK Engineering, Inc.
Bexar Energy Holdings, Inc.
Brice Equipment Company
Chart Heat Exchangers
Eaton Metal Products Company
Foster Wheeler USA Corporation
Gas Packagers, Inc.
GE Oil & Gas
J. W. Williams, Inc.
KnightHawk Engineering
Krueger Engineering & Mfg. Co., Inc.
Linde BOC Process Plants LLC
Marsau Enterprises
NATCO Group Inc.
National Petroleum & Energy Services, Inc.
Rouly, Inc.
Smithco Engineering, Inc.
South-Tex Treaters, Inc.
The Hanover Company
Toromont Process Systems, Inc.
United/Wells

HEAT PIPES

Hudson Products Corporation
Jet Specialty
Rouly, Inc.

INDUSTRIAL & SPECIALTY GASES

DCG Partnership 1, Ltd.
Jet Specialty
Linde BOC Process Plants LLC
National Petroleum & Energy Services, Inc.

INDUSTRY SOFTWARE

Aspen Technology, Inc.
Bryan Research & Engineering, Inc.
Coastal Flow Measurement, Inc.
Ellipsys, Inc.
eLynx Technologies, LLC
Entero Corporation
Lomic, Inc.
Oilphase - DBR
Optimized Gas Treating, Inc.
Quorum Business Solutions, Inc.
River City Engineering, Inc.
SolArc, Inc.
The Arrington Corporation
Tomcej Engineering Inc.
WinSim Inc.

INSTRUMENTS, CONTROLS & ANALYZERS

Allesco
Barry D. Payne & Associates, Inc.
Chandler Engineering Company, LLC
Control Microsystems
DCG Partnership 1, Ltd.
Daniel Measurement and Control
Drake Controls, LLC
Elliott Turbomachinery Co. Inc.
Energy Dynamics, Ltd. (EnDyn, Ltd.)
Exline, Inc.
Fisher Controls International Inc.
FWMurphy
GE Oil & Gas
Graves Analytical Services LLC

INSTRUMENTS, CONTROLS & ANALYZERS (Cont'd.)

Ignition Systems & Controls, LP
Invensys Foxboro
Jet Specialty
Miratech Corp.
Moore Control Systems, Inc.
Myers-Aubrey Co.
Quorum & Associates
Rolls-Royce Energy Business
T. F. Hudgins, Inc.
The Lubrizol Corporation
Thermo Electron Cooperation
Vinson Process Controls
Wasson-ECE Instrumentation
Welker Engineering Co.
Winn-Marion Barber, LLP
Yokogawa Corporation of America

LAB SUPPLIES

Graves Analytical Services LLC
Jet Specialty
Thomas Petroleum Ltd.

LIGHTNING SUPPRESSION

Jet Specialty

LIQUID NATURAL GAS EQUIPMENT

Afton Pumps, Inc.
Air Products and Chemicals, Inc.
CB&I Howe-Baker Process & Technology
Chart Heat Exchangers
Elliott Turbomachinery Co. Inc.
JGC Corporation
KBR
Linde BOC Process Plants LLC
Mitsubishi Heavy Industries, Ltd
Peerless Mfg. Co.
Sundyne Corporation
The Hanover Company
Total Energy Corp.
Trinity Industries, Inc.

LIQUID NATURAL GAS PROCESSING PLANTS

JGC Corporation

MEASUREMENT EQUIPMENT

ABB Inc. – Totalflow
Allesco
American Measurement Services
Barry D. Payne & Associates, Inc.
Chandler Engineering Company, LLC
Coastal Flow Measurement, Inc.
Control Microsystems
DCG Partnership 1, Ltd.
Daniel Measurement and Control
eLynx Technologies, LLC
FWMurphy
GARZO, Incorporated
Gas Analytical Solutions, Inc.
GE Oil & Gas
Graves Analytical Services LLC
Gulf Coast Dismantling
J-W Measurement Company
J-W Operating Company
J. W. Williams, Inc.
Jet Specialty
Kimray, Inc.
SPL, Inc.
Thurmond-McGlothlin Inc.
Vinson Process Controls
Wasson-ECE Instrumentation
Welker Engineering Co.
Winn-Marion Barber, LLP
Yokogawa Corporation of America

MEMBRANES

ACS Industries, LP
Air Products and Chemicals, Inc.
CB&I Howe-Baker Process & Technology
Continental Products of Texas
NATCO Group Inc.
NORIT Americas Inc.
Porous Media
Randall Gas Technologies - ABB Lummus Global Inc.
Sulzer Chemtech
UOP LLC
Wasson-ECE Instrumentation
Welker Engineering Co.

MIXERS

Allesco
Sulzer Chemtech

MODULAR GAS PROCESSING PLANTS

Alcoa World Chemicals, Adsorbents and Catalysts
BCCK Engineering, Inc.
CB&I Howe-Baker Process & Technology
CrystaTech, Inc.
Dickson & Tryer Engineering Co., Ltd.
Engelhard Corporation
EPC, Inc.
Gas Technology Corporation
GasTech Engineering Corporation
HPT Inc.
J. W. Williams, Inc.
Krause, Inc. Engineers - Architects
Linde BOC Process Plants LLC
Mitsubishi Heavy Industries, Ltd,
NATCO Group Inc.
Optimized Process Designs
Pearl Development Company

MODULAR GAS PROCESSING PLANTS (Cont'd.)

Prosernat
Saulsbury Industries
Select Engineering, Inc.
South-Tex Treaters, Inc.
TECNA ESTUDIOS Y PROYECTOS DE INGENIERIA SA
The Hanover Company
Thomas Russell Co.
Vanson Engineering Co.
Westfield Engineering & Services, Inc.

NITROGEN GENERATORS

Air Products and Chemicals, Inc.
CB&I Howe-Baker Process & Technology
Linde BOC Process Plants LLC
Parker Hannifin Corporation

ODOR CONTROL PRODUCTS

JGC Corporation
SulfaTreat

ODORIZATION

Peerless Mfg. Co.
Welker Engineering Co.

OPTICAL PIPELINE VIEWING EQUIPMENT

Welker Engineering Co.

PACKAGED REFRIGERATION SYSTEMS

Aggreko LLC
CB&I Howe-Baker Process & Technology
Dickson & Tryer Engineering Co., Ltd.
Energy Compression System
Gas Packagers, Inc.
Gulf Coast Dismantling
HPT Inc.
Mitsubishi Heavy Industries, Ltd.
NATCO Group Inc.
RSC International
Saulsbury Industries
Select Engineering, Inc.
Toromont Process Systems, Inc.
W. L. Hamilton Engineering P.C.
York Process Systems

PIGGING EQUIPMENT

Western Filter Co., Inc.

PIPELINE MARKER & TEST STATION

Western Filter Co., Inc.

PIPES, VALVES, FITTINGS

CB&I Howe-Baker Process & Technology
City Pipe & Supply Corp.
Daniel Measurement and Control
GE Oil & Gas
J-W Measurement Company
Jet Specialty
Marsau Enterprises
McJunkin Corporation
Myers-Aubrey Co.
Orbit Valve Co.
Peerless Mfg. Co.
Welker Engineering Co.

POLYMERS

Atofina Chemicals Inc., Technical Polymers Division

PRODUCTION EQUIPMENT

CB&I Howe-Baker Process & Technology
Control Microsystems
Gas Technology Corporation
Gulf Coast Dismantling
Hy-Bon Engineering Company, Inc.
J. W. Williams, Inc.
Jet Specialty
Mitsubishi Heavy Industries, Ltd.
NATCO Group Inc.
National Petroleum & Energy Services, Inc.
Peerless Mfg. Co.
Prosernat
Rouly, Inc.
The Hanover Company
United/Wells
W. L. Hamilton Engineering P.C.
Westfield Engineering & Services, Inc.

PROPRIETARY CRYOGENIC PROCESS EQUIPMENT

Air Products and Chemicals, Inc.
BCCK Engineering, Inc.
CB&I Howe-Baker Process & Technology
Chart Heat Exchangers
Pasadyn, Inc.
Sundyne Corporation

PUMPS

Afton Pumps, Inc.
Brice Equipment Company
Rotor-Tech, Inc.
SCFM Compression Systems Co.
Sundyne Corporation
Vanco Engineering Co.

RAILCAR PARTS

Walco Recycling Services LLC

RECONDITIONED GAS PLANTS & EQUIPMENT

CB&I Howe-Baker Process & Technology
Bexar Energy Holdings, Inc.
Dickson & Tryer Engineering Co., Ltd.
Energy Compression Systems
Gas Technology Corporation
Gulf Coast Dismantling
HPT Inc.
NATCO Group Inc.
Optimized Process Designs
Pasadyn, Inc.
Pearl Development Company
Rouly, Inc.
Saulsbury Industries
South-Tex Treaters, Inc.
The Hanover Company
Thomas Russell Co.
Total Energy Corp.
Vanson Engineering Co.
W. L. Hamilton Engineering P.C.
Westfield Engineering & Services, Inc.

REFURBISHED TREATING EQUIPMENT

Bexar Energy Holdings, Inc.
CB&I Howe-Baker Process & Technology
Dickson & Tryer Engineering Co., Ltd.
Gas Technology Corporation
Gulf Coast Dismantling
HPT Inc.
Marsau Enterprises
NATCO Group Inc.
Pearl Development Company
Saulsbury Industries
South-Tex Treaters, Inc.
The Hanover Company
Thomas Russell Co.
Westfield Engineering & Services, Inc.

RELIEF VALVES

Brice Equipment Company
Fisher Controls International Inc.
GE Oil & Gas
Jet Specialty
Marsau Enterprises
Myers-Aubrey Co.
NATCO Group Inc.
Total Energy Corp.
Welker Engineering Co.

SAFETY EQUIPMENT

3M Company
Boots & Coots, Inc.
Fisher Controls International Inc.
Invensys Foxboro
Jet Specialty

SAMPLING SYSTEMS

Chandler Engineering Company, LLC
Jet Specialty
SPL, Inc.
Welker Engineering Co.

SEPARATORS

ACS Industries, LP
CB&I Howe-Baker Process & Technology
Dickson & Tryer Engineering Co., Ltd.
Dresser-Rand Company
Eaton Metal Products Company
Gas Packagers, Inc.
GasTech Engineering Corporation
Gulf Coast Dismantling
Hawkins Filtration Products Inc.
J-W Measurement Company
KnightHawk Engineering
Marsau Enterprises
NATCO Group Inc.
Nowata Filtration, Division of NMW, Inc.
Peerless Mfg. Co.
Perry Equipment Corporation
Porous Media
Prosernat
Rhine Ruhr Pty Ltd.
South-Tex Treaters, Inc.
The Hanover Company
United/Wells
Westfield Engineering & Services, Inc.

SKID MOUNTED EQUIPMENT

Afton Pumps, Inc.
Alcoa World Chemicals, Adsorbents and Catalysts
BCCK Engineering, Inc.
CB&I Howe-Baker Process & Technology
Continental Products of Texas
CrystaTech, Inc.
Daniel Measurement and Control
Dickson & Tryer Engineering Co., Ltd.
Elkhorn Construction, Inc.
Elliott Turbomachinery Co. Inc.
Engelhard Corporation
EPC, Inc.
Gas Packagers, Inc.
Gas Technology Corporation
GasTech Engineering Corporation
GE Oil & Gas
Gulf Coast Dismantling
HPT Inc.
Hy-Bon Engineering Company, Inc.
J-W Measurement Company
Jet Specialty
Johnson Filtration Products, Inc.
KnightHawk Engineering
Linde BOC Process Plants LLC
Marsau Enterprises

SKID MOUNTED EQUIPMENT (Cont'd.)

Mitsubishi Heavy Industries, Ltd.
NATCO Group Inc.
National Petroleum & Energy Services, Inc.
Pasadyn, Inc.
Pearl Development Company
Peerless Mfg. Co.
Prosernat
Ref-Chem L.P.
RSC International
Saulsbury Industries
Select Engineering, Inc.
Simms Machinery International Inc.
TECNA ESTUDIOS Y PROYECTOS DE INGENIERIA SA
The Hanover Company
Thomas Russell Co.
Thurmond-McGlothlin Inc.
Toromont Process Systems, Inc.
United/Wells
Universal Compression
Vanson Engineering Co.
W. L. Hamilton Engineering P.C.
Welker Engineering Co.
Westfield Engineering & Services, Inc.
York Process Systems

SURPLUS EQUIPMENT

Bexar Energy Holdings, Inc.
Energy Compression Systems
Gas Technology Corporation
Gulf Coast Dismantling
Jet Specialty
NATCO Group Inc.
Pearl Development Company
South-Tex Treaters, Inc.
The Hanover Company
W. L. Hamilton Engineering P.C.
Westfield Engineering & Services, Inc.

TOWER PACKING/INTERNALS/ TRAYS/MIST ELIMINATORS

CB&I Howe-Baker Process & Technology
Koch-Glitsch LP
NATCO Group Inc.
National Petroleum & Energy Services, Inc.
Rhine Ruhr Pty Ltd.
Rouly, Inc.
Sulzer Chemtech

TURBINES

Dresser-Rand Company
Elliott Turbomachinery Co. Inc.
GE Oil & Gas
Gulf Coast Dismantling
Mitsubishi Heavy Industries, Ltd
Rolls-Royce Energy Business
Siemens Demag Delaval
Solar Turbines, Incorporated

TURBOCHARGERS

Exline, Inc.
Hawkins Filtration Products Inc.
Mitsubishi Heavy Industries, Ltd
Waukesha-Pearce Industries, Inc.

TURBOEXPANDERS

Dresser-Rand Company
Elliott Turbomachinery Co. Inc.
GE Oil & Gas
Mafi-Trench Corporation
Simms Machinery International Inc.
Texas Turbine Inc.

VAPOR RECOVERY UNITS

Air Products and Chemicals, Inc.
Dickson & Tryer Engineering Co., Ltd.
Gas Packagers, Inc.
Hy-Bon Engineering Company, Inc.
JGC Corporation
NATCO Group Inc.
SCFM Compression Systems Co.
Texas Turbine Inc.
The Hanover Company
Toromont Process Systems, Inc.
Westfield Engineering & Services, Inc.

VESSELS/INTERNALS/TANKS

Bartlett Equipment Company, Inc.
CB&I Howe-Baker Process & Technology
Dickson & Tryer Engineering Co., Ltd.
Eaton Metal Products Company
Gulf Coast Dismantling
Hawkins Filtration Products Inc.
Johnson Filtration Products, Inc.
KnightHawk Engineering
Linde BOC Process Plants LLC
Marsau Enterprises
NATCO Group Inc.
National Petroleum & Energy Services, Inc.
Rouly, Inc.
Saulsbury Industries
SulfaTreat
The Hanover Company
Total Energy Corp.
Trinity Industries, Inc.
United/Wells

WASTE HEAT RECOVERY UNITS

Bartlett Equipment Company, Inc.
CB&I Howe-Baker Process & Technology

WASTE HEAT RECOVERY UNITS (Cont'd.)

Gulf Coast Dismantling
JGC Corporation
KnightHawk Engineering
Mitsubishi Heavy Industries, Ltd
Optimized Process Furnaces
Rouly, Inc.
Thomas Russell Co.

WATER TREATING

Bartlett Equipment Company, Inc.

NOTES: